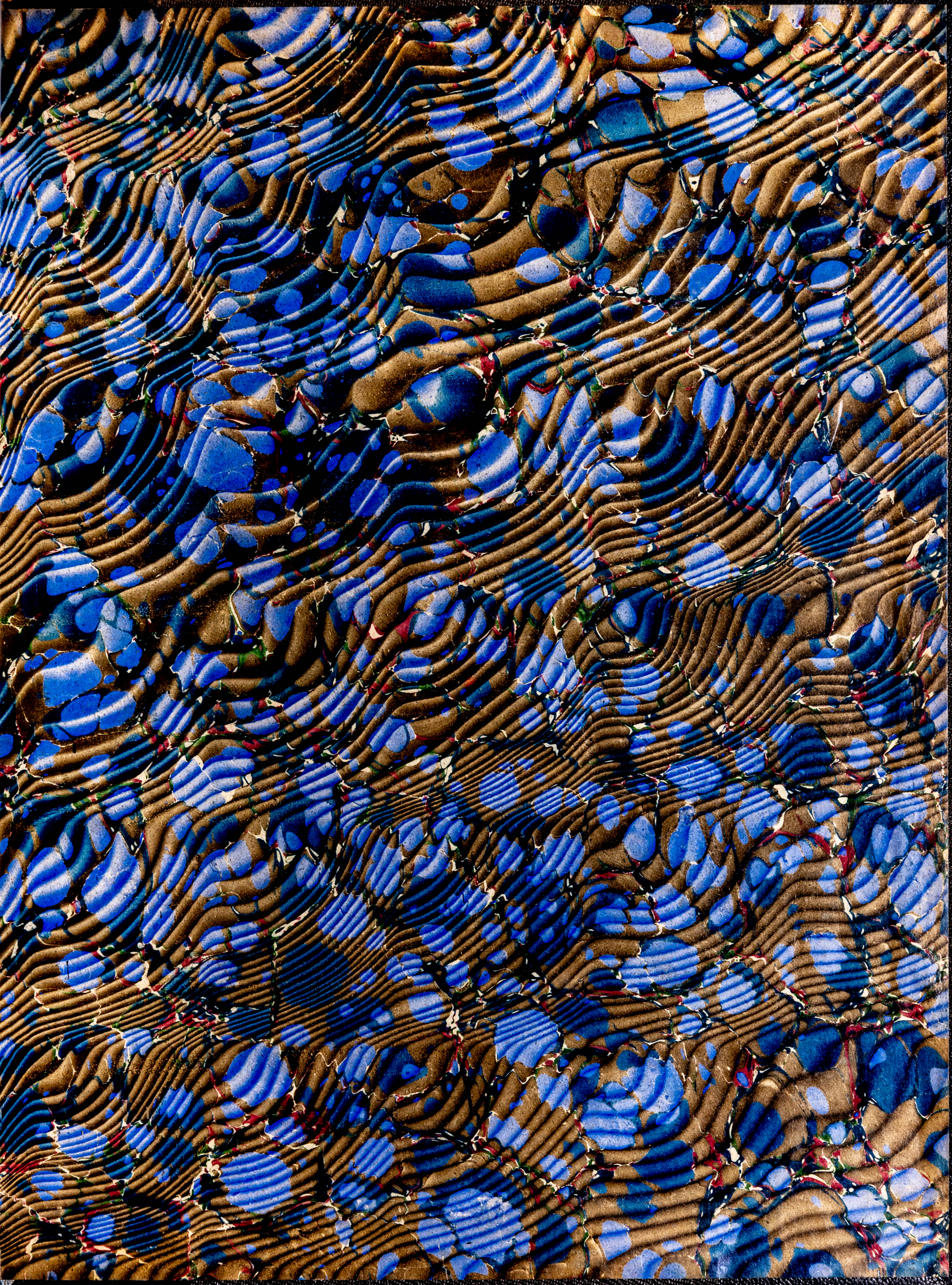

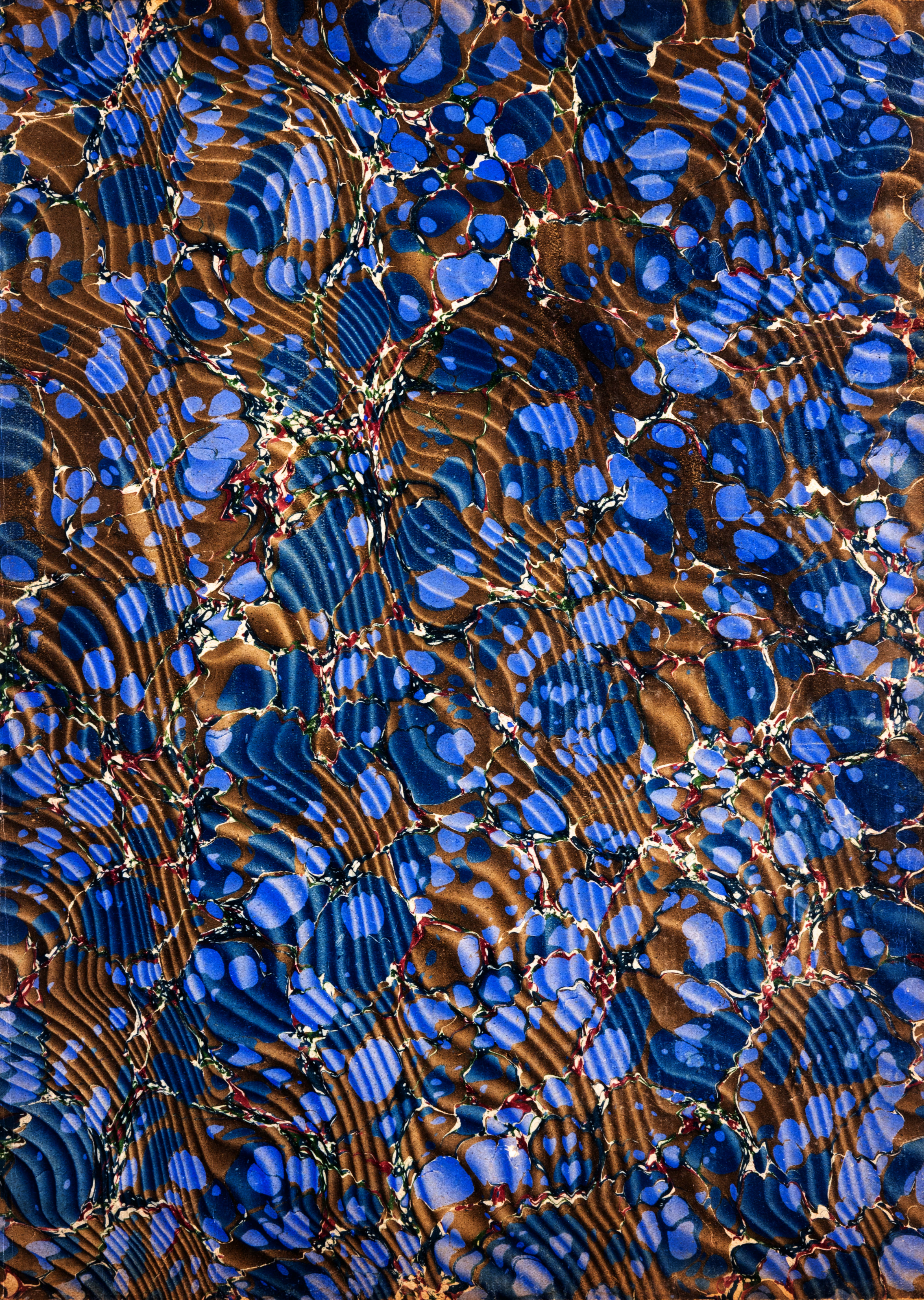

MODERN

MACHINE-SHOP PRACTICE

VOL. I.—2.

Yours truly

Joshua Rose

MODERN MACHINE-SHOP PRACTICE

OPERATION, CONSTRUCTION, AND PRINCIPLES OF
SHOP MACHINERY, STEAM ENGINES, AND ELECTRICAL MACHINERY

BY

JOSHUA ROSE, M.E.

ILLUSTRATED WITH NEARLY 4000 ENGRAVINGS

THIRD EDITION

REVISED AND ENLARGED

VOLUME I.

NEW YORK
CHARLES SCRIBNER'S SONS
1916

COPYRIGHT, 1887, 1891, 1899
BY CHARLES SCRIBNER'S SONS

PREFACE TO FIRST EDITION

MODERN MACHINE SHOP PRACTICE is presented to American mechanics as a complete guide to the operations of the best equipped and best managed workshops, and to the care and management of engines and boilers.

The materials have been gathered in part from the author's experience of thirty-one years as a practical mechanic; and in part from the many skilled workmen and eminent mechanics and engineers who have generously aided in its preparation. Grateful acknowledgement is here made to all who have contributed information about improved machines and details of new methods.

The object of the work is practical instruction, and it has been written throughout from the point of view, not of theory, but of approved practice. The language is that of the workshop. The mathematical problems and tables are in simple arithmetical terms, and involve no algebra or higher mathematics. The method of treatment is strictly progressive, following the successive steps necessary to becoming an intelligent and skilled mechanic.

The work is designed to form a complete manual of reference for all who handle tools or operate machinery of any kind, and treats exhaustively of the following general topics: I. The construction and use of machinery for making machines and tools; II. The construction and use of work-holding appliances and tools used in machines for working metal; III. The construction and use of hand tools for working metal; IV. The construction and management of steam engines and boilers. The reader is referred to the TABLE OF CONTENTS for a view of the multitude of special topics considered.

The work will also be found to give numerous details of practice never before in print, and known hitherto only to their originators, and aims to be useful as well to master-workmen as well as to apprentices, and to owners and managers of manufacturing establishments equally with their employees, whether machinists, draughtsmen, engineers, or operators of special machinery.

The illustrations, over three thousand in number, are taken from modern practice; they represent the machines, tools, appliances and methods now used in the leading manufactories of the world, and the typical steam engines and boilers of American manufacture.

The new PRONOUNCING AND DEFINING DICTIONARY at the end of the work, aims to include all the technical words and phrases of the machine shop, both those of recent origin and many old terms that have never before appeared in a vocabulary of this kind.

The wide range of subjects treated, their convenient arrangement and thorough illustration, with the exhaustive TABLE OF CONTENTS of each volume and the full ANALYTICAL INDEX to both, will, the author hopes, make the work serve as a fairly complete ready reference library and manual of self-instruction for all practical mechanics, and will enlighten, while making more profitable, the labor of his fellow-workmen.

JOSHUA ROSE.

NEW YORK, 1887.

PREFACE TO THE THIRD EDITION

THE vast strides made in mechanics during recent years, make it an urgent necessity to provide a thorough revision of MODERN MACHINE SHOP PRACTICE.

American mechanics and engineers excel those of any other country in their efforts to keep abreast of the progress of the age.

The latest machines and machine tools are greatly superior to those preceding them; and recent improvements make the engines of only a few years ago seem almost useless.

Realizing this, the author has carefully examined the many claims of mechanical improvement, and embodied in this revision those having the highest practical advantages.

As a result of all the changes and additions to the subjects of Lathe Work, Vice Work, Planing, Gear Cutting Machines, Grinding Machines, Milling Machines, and Steam Engines, the size of the work has been greatly enlarged and the number of plates and illustrations increased.

Since the *First Edition* was published the use of electricity has become so universal and the machinery for generating and applying it so varied and elaborate as to take a very important place in the world of mechanics. In revising this subject it has been found expedient to entirely replace the old text and engravings with new material; and to embody a complete description of the most modern electrical machines and appliances. The aim has been to follow as closely as possible the original intent of the work, and in pursuance of this plan the rules to be observed in operating electrical machines, the details regarding their construction, the use that each part in the mechanism is intended to serve, together with the principles that regulate the movements of the electric current so far as they are known positively, have been explained from the standpoint of the practical electrician and stated in plain work-shop language. The author is deeply indebted to the leading electricians in this

country who have so kindly aided him in this division of the work; also to engineers having charge of the most important electric plants both at home and abroad. Placing himself in the position of a learner, he has sought from one and another the separate facts that go to make up the complete chain of information needed by practical men. To aid in making so complex a subject clear to the ordinary reader, a free use of illustrations has been made which it is believed will remove all difficulties; and a valuable series of questions and answers introduced, so that any person of average ability, even without any previous knowledge of the subject, can become an intelligent and practical electrician.

Refrigeration and Ice-making, another rapidly expanding industry, is also wholly rewritten and newly illustrated, embodying the latest improvements in machinery and practice.

The author believes that the large expense and labor incurred in this revision are amply justified by the enhanced value of the work in its new form.

JOSHUA ROSE.

NEW YORK, *November*, 1898.

CONTENTS.

VOLUME I.

CHAPTER I.

THE TEETH OF GEAR-WHEELS.

PAGE

Gear-Wheels. Spur-wheels, bevel-wheels, mitre-wheels, crown-wheels, annular or internal wheels 1
Trundle-wheels, rack and pinion-wheel and tangent screw, or worm and worm-wheel 1
The diameter of the pitch circle of 1
Gear-Wheel Teeth. The face, the flank, the depth or height.. 1
The space, the pitch line, the point, the arc pitch, the chord pitch, the line of centres 2
Rules for finding the chord pitch from the arc pitch; table of natural sines; diametral pitch; finding the arc from the diametral pitch; table of arc and diametral pitches... 3
Gear-Wheels. The driver and follower, a train of gears 3
Intermediate gears 3
The velocity of compounded wheels..... 4
Finding the diameters of the pitch circles of..... 4
Considered as revolving levers..... 5
Calculating the revolutions of, and power transmitted by... 5
The angular velocity of..... 6
Gear-Wheels. Hunting tooth in, stop motion of..... 7
Gear-Wheel Teeth. The requirements and nature of the teeth curves 7
Cycloidal curves for the faces of; epicycloidal and involute curves; the hypocycloidal curve; method of forming or generating the epicycloidal and hypocycloidal curves for the faces and flanks of gear teeth..... 8
Applications of the epicycloidal and hypocycloidal curves in the formation of gear teeth..... 9
The diameter of the circle for generating the epicycloidal and hypocycloidal curves; graphical demonstration that the flank curves are correctly formed to work with the face curves of the other wheel..... 10
Graphical demonstration that the curves are correct independent of either the respective sizes of the wheels, or of the curve generating circles 11
Gear-Wheels. Hand applications of the rolling or generating circle to mark the tooth curves for a pair of wheels..... 12
Gear-Wheel Teeth. The variation of curve due to different diameters of wheels or of rolling circles..... 12
Tracing the path of contact of tooth upon tooth in a pair of gear-wheels; definition of the "arc of approach;" definition of the "arc of recess;" demonstration that the flanks of the teeth on the driver or driving-wheel have contact with the faces of the driven wheel during the arc of approach, and with the flanks of the driven wheel during the arc of recess..... 13
Confining the action of the teeth to one side only of the line of centres, when motion rather than power is to be conveyed..... 13
Demonstration that the appearance or symmetry of a tooth has no significance with regard to its action..... 14
Finding how many teeth will be in constant action, the diameter of the wheels, the pitch of the teeth, and the diameter of the rolling circle being given..... 15
Example of the variation of tooth form due to variation of wheel diameter..... 15
Gear Teeth. Variation of shape from using different diameters of rolling circles..... 16
Thrust on the wheel shafts caused by different shapes of teeth..... 16
Gear-Wheels. Willis' system of one size of rolling circle for trains of interchangeable gearing..... 16
Conditions necessary to obtain a uniform velocity of..... 16
Gear Teeth. The amount of rolling and of sliding motion of... 16
The path of the point of contact of..... 16
The arcs of approaching and of receding contact..... 16
Lengths of the arcs of approach and of recess..... 16
The influence of the sizes of the wheels upon the arcs of contact..... 17

PAGE

Influence of the size of the rolling circle upon the amount of flank contact..... 18
Demonstration that incorrectly formed teeth cannot correct themselves by wear..... 18
The smaller the diameter of the rolling circle, the less the sliding motion..... 18
Influence of the size of the rolling upon the number of teeth in contact in a given pair of wheels..... 19
Demonstration that the degrees of angle the teeth move through exceed those of the path of contact, unless the tooth faces meet in a point..... 19
Influence of the height of the teeth upon the number of teeth in contact..... 20
Increasing the arc of recess without increasing the arc of approach..... 20
Wheels for transmitting motion rather than power..... 21
Clock wheels..... 21
Forms of teeth having generating or rolling circles, as large or nearly as large as the diameters of the wheels..... 21
Gear-Wheels. Bevel..... 21
The principles governing the formation of the teeth of bevel-wheels..... 22
Demonstration that the faces of the wheels must be in line with the point of intersection of the axis of the two shafts 22
Gear Teeth. Method of finding the curves of, for bevel gear... 22
Gear-Wheels. Internal or annular..... 23 to 27
Demonstration that the teeth of annular wheels correspond to the spaces of spur-wheels..... 23
Gear-Wheels Internal. Increase in the length of the path of contact on spur-wheels of the same diameter, and having the same diameter of generating or rolling circle..... 23
Demonstration that the teeth of internal wheels may interfere when spur-wheels would not do so..... 23
Methods of avoiding the above interference..... 23
Comparison of, with spur-wheels..... 23
The teeth of: demonstration that it is practicable to so form the teeth faces that they will have contact together as well as with the flanks of the other wheel..... 24
Intermediate rolling circle for accomplishing the above result..... 24
The application of two rolling circles for accomplishing the above result..... 24
Demonstration that the result reached by the employment of two rolling circles of proper diameter is theoretically and practically perfect..... 24
Limits of the diameters of the two rolling circles..... 25
Increase in the arc of contact obtained by using two rolling circles..... 25
Demonstration that the above increase is on the arc of recess or receding contact, and therefore gives a smooth action. 25
Demonstration that by using two rolling circles each tooth has for a certain period two points of contact..... 25
The laws governing the diameters of the two rolling circles. 25
Practical application of two rolling circles..... 26
Demonstration that by using two rolling circles the pinion may contain but one tooth less than the wheel..... 26
The sliding and rolling motion of the teeth of..... 27

CHAPTER II.

THE TEETH OF GEAR-WHEELS (Continued).

Worm and Worm-Wheel, or wheel and tangent screw ....28 to 31
General description of..... 28
Qualifications of..... 28
The wear of..... 28
Worm-Wheel Teeth, the sliding motion of..... 28
When straight have contact on the centres only of the tooth sides..... 28
That envelop a part of the worm circumference..... 28
The location of the pitch line of the worm..... 28

PAGE

Cutting curved worm wheel teeth with a hob..... 28
The proper number of teeth in the worm-wheel..... 29
Locating the pitch line of the worm so as to insure durability..... 29
Rule for finding the best location for the pitch line of the worm..... 29
Increasing the face of the worm to obtain a smoother action 29
Worms, to work with a square thread..... 29
Worm-Wheels, applications of..... 30
End Thrust of Worm-Shaft, prevented by right and left hand worms, driving gears of different diameters..... 31
Gear-Wheels with involute teeth.....31 to 34
Gear Teeth. Generating the involute curve..... 31
Templates for marking the involute curve..... 32
Involute Teeth, the advantages of..... 34
Gear Teeth, Pratt and Whitney's machine for cutting templates for..... 35

CHAPTER III.

THE TEETH OF GEAR-WHEELS (Continued).

New gear generating and cutting engine..... 36
Rack transformed into a cutting tool..... 36
Bisected gear teeth cutters..... 36
Prof. McCord's new gearing..... 36
The Willis theory..... 36
Gear Teeth, revolving cutters for..... 37
Pantagraph engine for dressing the cutters for..... 38
Numbers of cutters used for a train of wheels..... 39
Gear-Wheel Teeth. Table of equidistant value of cutters..... 41
Depth of, in the Brown and Sharpe system..... 42
Cutting the teeth of worm-wheels..... 42
Finding the angle of the cutter for cutting worm-wheels... 43
The construction of templates for rolling the tooth curves.. 43
Rolling the curves for gear teeth..... 43
Forms of templates for gear teeth..... 44
Pivoted arms for tooth templates..... 44
Marking the curves by hand..... 45
Former or Template of the Corliss bevel gear-wheel engine or cutting machine..... 45
The use of extra circles in marking the curves with compasses..... 46
Finding the face curves by geometrical constructions..... 47
The Willis odontograph for finding the radius for striking the curves by hand..... 47
The method of using the Willis odontograph..... 48
Professor Robinson's odontograph..... 49
Method of using Professor Robinson's odontograph..... 49
Application of Professor Robinson's odontograph for trains of gearing..... 51
Tabular values and setting numbers for Professor Robinson's odontograph..... 51
Walker's patent wheel scale for marking the curves of cast teeth..... 51
Scale for relations of pitch, number of teeth, and radius of gear-wheels..... 52
Two parts known to find the third..... 52
Gear to clear a shaft or other obstruction..... 53
The amount of side clearance in cast teeth..... 53
Filleting the roots of epicycloidal teeth with radial flanks.. 53
Scale of tooth proportions given by Professor Willis..... 54
The construction of a pattern for a spur-wheel that is to be cast with the teeth on..... 54
Template for planing the tooth to shape..... 54
Method of marking the curves on teeth that are to be glued on 55
Method of getting out the teeth of..... 56
Spacing the teeth on the wheel rim..... 56
Methods of accurately spacing the pattern when it has an even number of teeth..... 58
Method of spacing the wheel rim when it has an odd number of teeth..... 58
Gear-Wheels, Bevel-Pinion, drawings for..... 59
Getting out the body for a bevel-wheel..... 59
Template for marking the division lines on the face of the wheel..... 59
Marking the lines of the division on the wheel..... 60
Gear-Wheels, Pinion, with dovetail teeth..... 60
Testing the angel of bevel-wheels while in the lathe..... 60
Gear-Wheels, Skew Bevel. Finding the line of contact..... 61
Marking the inclination of the teeth..... 61
Gear-Wheels, Bevel, drawing for built up..... 61
Gear-Wheels, Worm, or endless screw..... 62
Constructing a pattern from which the worm is to be cast.. 62
Tools for cutting the worm in a lathe..... 62
Cutting the teeth by hand..... 62
Gear-Wheels, Mortise or cogged..... 63
Methods of fastening cogs..... 63
Methods of getting out cogs for..... 63
Gear-Wheel Teeth, calculating the strength of epicycloidal.... 64
Factors of safety for..... 64
Tredgold's rule for calculating the strength of..... 65

PAGE

Cut, calculating the strength of..... 65
Gear-Wheel Teeth. The strength of **cogs**..... 66
The thickness of cogs..... 66
The durability of cogs..... 66
Table for calculating the strength of different kinds of..... 67
The contact of cast teeth..... 67
Table for determining the relation between pitch diameter, pitch, and number of teeth in gear-wheels..... 68
Examples of the use of the above table..... 68
With stepped teeth..... 69
Angular or helical teeth..... 69
End thrust of angular teeth..... 69
Herring-bone angular teeth..... 69
For transmitting motion at a right angle by means of angular or helical teeth..... 69
Cutting helical teeth in the lathe..... 69
For wheels whose shaft axes are neither parallel nor meeting..... 70
Elliptical..... 70
Elliptical, marking the pitch lines of..... 70
Elliptical, drawing the teeth curves of..... 73
For variable motion..... 74
Form of worm to give a period of rest..... 74
Various applications of..... 74
Gear-Wheels, arrangement of, for periodically reversing the direction of motion..... 75
Watt's sun and planet motion..... 75
Arrangements for the rapid multiplication of motion..... 75
Arrangement of, for the steering gear of steam fire engines. 75
Various forms of mangle gearing..... 79
Gear-Wheel and Rack, for reciprocating motion..... 77
Friction Wheels..... 77
The material for..... 77
Paper..... 78
For the feed motion of machines..... 78
The unequal wear upon grooved..... 79
Form of, for relieving the journals of strain..... 79
Cams, for irregular motion..... 80
Finding the pitch line of..... 80
Finding the working face of..... 80
The effect the diameter roller has upon the motion produced by a cam..... 80
Demonstration of the different motion produced by different diameters of rollers upon the same cam..... 80
Diagram of motion produced from the same cam with different diameters of rollers..... 81
Return or backing..... 82
Methods of finding the shape of return or backing..... 82
Cam Motion, for an engine slide valve without steam lap..... 83
For a slide valve with steam lap..... 83
Groove Cams, proper construction of..... 84
The wear of..... 84
Brady's improved groove cam with rolling motion and adjustment for wear..... 84

CHAPTER IV.

SCREW-THREADS.

Screw-Threads, the various forms of..... 85
The pitch of..... 85
Self-locking..... 85
The Whitworth..... 86
The United States standard..... 86
The Common V..... 86
The requirements of..... 86
Tools for cutting..... 87
Variation of pitch from hardening..... 87
The wear of thread-cutting tools..... 88
Methods of producing..... 88
Alteration of shape of, from the wear of the tools they are cut by..... 89
Screw Thread Cutting Tools. The wear of the tap and the die..... 89
Improved form of chaser to equalize the wear..... 90
Form of, to eliminate the effects of the wear in altering the fit..... 90
Originating standard angles for..... 91
Standard micrometer gauge for the United States standard screw thread..... 91
Standard plug and collar gauges for..... 91
Producing gauges for..... 92
Table of United States standard for bolts and nuts..... 93
Table of standard for the V thread..... 95
United States standard for gas and steam pipes..... 95
Taper for standard pipe threads..... 95
Methods of measuring thread..... 95
Shape of caliper nibs..... 95, 96
Rules for computing depths of threads..... 95, 96
Rule for computing depth of United States standard thread..... 96
Examples of measuring screws by the sides of their threads. 96

PAGE

Machine for measuring the pitch of threads ... 96
Routine for measuring a sixty-degree screw thread ... 96
Measuring odd and even number of threads ... 96
Screw-cutting hand tools ... 96
Thread-Cutting Tools. American and English forms of stocks and dies ... 97
Adjustable or jamb dies ... 98
The friction of jamb dies ... 98
The sizes of hobs that should be used on jamb dies ... 99
Cutting right or left hand thread with either single, double, or treble threads with the same dies ... 99
Hobbs for hobbing or threading dies ... 100
Improved thread cutting dies ... 101
Various forms of stocks with dies adjustable to take up the wear ... 101
Dies for gas and steam pipes ... 101
Thread-Cutting Tool Taps. The general forms of taps ... 102
Reducing the friction of ... 102
Giving clearance to ... 102
The friction of taper ... 103
Improved forms of ... 103
Professor J. E. Sweet's form of tap ... 104
Adjustable standard ... 104
The various shapes of flutes employed on taps ... 105
The number of flutes a tap should have ... 105
Demonstration that a tap should have four cutting edges rather than three ... 106
The position of the square or driving end, with relation to the cutting edges ... 106
Taper taps for blacksmiths ... 106
Collapsing taps for use in tapping machines ... 107
Collapsing tap for use in a screw machine ... 107
The alteration of pitch that occurs in hardening ... 108
Gauging the pitch after the hardening ... 108
Correcting the errors of pitch caused by the hardening ... 109
For lead ... 109
Elliptical in cross section ... 109
For very straight holes ... 109
Tap wrenches solid and adjustable ... 110
Thread-Cutting. Tapping ... 110
Appliances for tapping standard work ... 111

CHAPTER V.

FASTENING DEVICES.

Bolts, classification of, from the shapes of their heads ... 112
Classification of, from the shapes of their bodies ... 112
Countersunk ... 112
Holes for, classification of ... 112
For foundations, various forms of ... 113
Hook bolts ... 113
The United States standard for finished bolts and nuts ... 113
The United States standard for rough bolts and nuts, or black bolts ... 114
The Whitworth standard for bolts and nuts ... 114
Screws ... 114
Keys and Keyways ... 115
Various kinds of ... 115
Bearing surface of ... 115
With set screws ... 115
Application of keys to a square shaft ... 115
Proportions of ... 115
Taper keys ... 115
Application of set screws to hubs or bosses ... 115
Bushing used as keys ... 116
Feathers and their application ... 116
Through keys and keyways ... 116
Draft ... 116
Removal of keys ... 116
Reverse keys ... 116
Pins and their application ... 117
Screws, Studs, and Bolts ... 117
Set screws ... 117
Bolt heads, application of ... 117
Nuts, application of ... 117
Check nuts ... 117
Differential screws ... 118
Slackening of nuts ... 118
Fine end adjustments ... 118
Split nuts ... 118

CHAPTER VI.

THE LATHE.

Lathe, the importance and advantages of ... 119
Classification of lathes ... 119
Foot ... 119
Methods of designating the sizes of ... 120
Bench ... 120
Power ... 120
Hand ... 120
Slide Rest for ... 121
American form of, advantages and disadvantages ... 122
English forms of ... 122
Improved features of slide rests ... 122
For spherical work ... 123
Methods of turning true spheres ... 123
Engine Lathe, general construction of ... 123
F. E. Reed lathe ... 124
Elevating rest ... 124
Details of construction ... 124
Feed motions ... 126
Taper turning attachments ... 126
Flathers Machine Tool Co.'s ... 126
Dwight Slate patent ... 127
Hazlett & Lord patent ... 127
Specifications of ... 127
Le Blond engine lathes ... 128
Automatic feeds ... 128
Taper turning ... 129
Putnam Tool Co.'s lathe ... 133
The construction of the shears of ... 134
Construction of the headstock ... 134
Construction of the bearings ... 134
Construction of the back gear ... 135
Means of giving motion to the feed spindle ... 135
Construction of the tailstock ... 135
Method of rapidly securing and releasing the tailstock ... 136
Lathe Tailstock, setting over for turning tapers ... 136
Engine Lathe, construction of carriage ... 137
Feed motion for carriage or saddle ... 137
Lathe Apron. Construction of the feed traverse ... 138
Construction of the cross-feed motion ... 138
Engine Lathe, lead screw and change wheels of ... 139
Feed spindle and lead screw bearings ... 139
Swing frame for lead screw ... 139
Lead screw nuts ... 140
With compound slide rest ... 140
Construction of compound slide rest ... 141
Advantages of compound slide rest ... 141
For taper turning ... 142
Taper-turning attachments ... 142
Slide rest employing two cutting tools ... 143
With compound duplex slide rest ... 143
Detachable slide rest ... 143
Three-tool slide rest for turning shafting ... 143
With flat saddle for chucking work on ... 143
The Sellers Lathe ... 143
Construction of the headstock and treble gear ... 144
Construction of the tailstock and method of keeping it in line 145
Construction of the carriage and slide rest ... 145
Methods of engaging and disengaging the feed motions ... 146
Car Axle Lathe, with central driving motion and two slide rests. 147
The feed motions of ... 148
Self-Acting Lathe, English form of ... 148
Pattern Maker's Lathe ... 148
Brake for cone pulley ... 149
With wooden bed ... 149
Slide rest for ... 149
Chucking Lathe, English ... 149
Feed motions of ... 150
Pulley Lathe ... 150
Gap or Break Lathe ... 151
Extension Lathe ... 151
Wheel Lathe ... 151
Chucking Lathe for boring purposes ... 151
Hand and drilling lathe ... 151
Set-over lathe ... 151
Improved Foot Block ... 151
Dressing Lathe for hexagon globe valves ... 152
Double-head lathe for turning keys of cocks ... 152
Hendey-Norton lathe ... 152
Screw-cutting features ... 152
Forming Monitor lathe with improvements ... 152
The forming tool slide and improved tool slide ... 152
Increased capacity ... 153
Automatic chuck ... 153
Pieces inserted and removed without stopping the lathe ... 153
Improved turret lathe ... 153
Ring friction clutch ... 153
Taking up the wear of the clutch ... 153
Screw machine with automatic feed ... 153
Spring collar ... 153
Sixty-inch forge lathe ... 153
Footstock rollers ... 153
Pit lathe ... 153
Triple geared Putnam lathe ... 153
Surfacing Lathe with Cutter Face Plate ... 153
Position of cutting tools ... 153

PAGE

Chucking lathes ... 154
Double axle lathe ... 154
Improved gap lathes ... 154
Horizontal chucking machine, improved ... 154
Combination turret lathe ... 154
Hollow spindle with chuck at each end ... 154
Automatic turret revolution ... 154
Regular lathe carriage instead of block with cut-off slide ... 154
Provision for turning tapers ... 154
Chasing bar ... 155
Flat turret lathe (2 x 24) ... 155
Cut begins at the chuck ... 155
Large circular plate in place of a turret ... 155
Backward rest on turning tools ... 155
Automatic chuck ... 155
Toggle joint connection for sleeve lever ... 155
Spindle box caps on hollow posts ... 156
Turning and locking the turret ... 156
Power feed for turret carriage ... 156
Three point bearing ... 156
Irregular and taper turning tool ... 157
Chuck for irregular pieces ... 157
Screw-cutting machine ... 157
Hartness patent dies ... 157
Construction of chasers, dies, and holders ... 157
Chaser produced by milling process ... 158
J. E. Reinecker lathe ... 159
Gisholt's lathes ... 159
Hexagonal turrets ... 159
Finishing cone pulleys ... 160
New Haven Manufacturing Co.'s lathe ... 160
Pattern makers' lathes ... 160
Lodge and Shipley engine lathe ... 160
Taper turning attachment ... 160
Method of obtaining exact diameter ... 160
Screw-cutting gears ... 160

CHAPTER VII.

DETAILS IN LATHE CONSTRUCTION.

Live Spindle of a lathe, the fit of ... 162
Taking up the wear of the back bearing ... 162
The wear of the front bearing of ... 162
Driving Cone, arranging the steps of ... 162
Requirements of proportioning the steps of ... 162
Rules for proportioning diameters of steps of, when two pulleys are exactly alike and connected by an open belt ... 162–164
When the two pulleys are unlike ... 164–167
Back Gear, methods of throwing in and out ... 168
Conveying motion to the lead screw ... 168
Attaching the swing frame ... 169
Feed Motion, to run quickly for polishing ... 170
On small lathes, in one direction only ... 170
Carriage, to discontinue its traverse, or feed ... 170
To lock in a fixed position ... 170
Slide Rest, weighted elevated ... 170
Double tool holder for ... 171
Gibbed elevating ... 171
Examples of feed motions ... 171
Feed Regulators for screw cutting ... 172
The star feed ... 172
Ratchet Feeds ... 173
Tool Holding devices, the various kinds of ... 173
Tool Rest swiveling ... 174
Tool Holder for compound slide rests ... 174
For octagon boring tools ... 175
Lathe Lead and Feed Screws ... 175
Lead screws, supporting, long ... 176
Position of the feed nut ... 177
Form of threads of lead screws ... 177
The effect the form of thread has in causing the nut to lock properly or improperly ... 177
Example of a lead screw with a pitch of three threads per inch. 177
Example of a lead screw with five threads per inch ... 178
Example with a lead screw of five threads per inch ... 179
Device for correcting the errors of pitch of ... 179
Table for finding the change wheels for screw cutting when the teeth in the change wheels advance by four. ... 180
For finding the change wheels when the teeth in the wheels advance by six ... 180
Constructing a table to cut fractional threads on any lathe ... 181
Finding the change wheels necessary to enable the lathe to cut threads of any given pitches ... 181
Finding the change wheels necessary to cut fractional pitches. 181
Determining the pitches of the teeth for change wheels ... 182
Lathe Shears or beds ... 182
Advantages and disadvantages of, with raised V-guide-ways. 182
Examples of various forms of ... 183
Lathe Shears with one V and one flat side ... 183
Methods of ribbing ... 184

PAGE

The arrangement of the legs of ... 184
Lathe Tailblock ... 185
With rapid spindle motion ... 185
With rapid fastening and releasing devices ... 185
The wear of the spindles of ... 185
Spindles, the various methods of locking ... 186
Testing, various methods of ... 187

CHAPTER VIII.

SPECIAL FORMS OF THE LATHE.

Watchmaker's Lathes ... 188
Construction of the headstock ... 188
Construction of chucks for ... 188
Expanding chucks for ... 188
Contracting chucks for ... 188
Construction of the tailblock ... 189
Open spindle tailstocks for ... 189
Filing fixture for ... 189
Fixture for wheel and pinion cutting ... 189
Jewelers' rest for ... 189
Watch Manufacturer's Lathe ... 190
Special chucks for ... 190
Pump centre rest ... 190
Lathe, hand ... 191
Screw slotting ... 191
With variable speed for facing purposes ... 191
Cutting-off machine ... 192
Grinding Lathes ... 192
Landis' Universal grinding lathe ... 192
Swiveling platen for taper grinding ... 193
Traversing mechanism ... 193
Change of speed without stopping machine ... 193
Capacity ... 193
Change of tension on friction traverse ... 193
Change of point of traverse reverse ... 193
Grinding light shafts ... 193
The centre rest ... 194
The headstock spindle ... 194
Footstock spring tension ... 194
To do very accurate grinding ... 194
Adjustment to grind one two-thousandth of an inch ... 194
Chuck for grinding thin saws ... 194
Improved No. 2 Universal grinding machine ... 194
Internal grinding fixture ... 195
Care and use of machines ... 195
Truing and mounting emery wheels ... 195
Need of various sizes, shapes, and grades of wheels. 195
Speed of work on grinding machines ... 195
Effects of change of temperature in work ... 196
Use of water in grinding ... 196
Back, follow, and spring rests ... 196, 197
Shoes for rests ... 197
Special chucks for grinding lathes ... 197
The Morton Poole calender roll grinding lathe ... 198
The construction of the bed and carriages ... 198
Principles of action of the carriages ... 198
Construction of the emery-wheel arbors and the driving motion ... 198, 199
The advantages of ... 199
The method of driving the roll ... 200
Construction of the headstock ... 200
The transverse motion ... 200
The Brown and Sharpe Screw Machine, or screw-making lathe. 200
Threading tools for ... 203
Examples of the use of ... 203
The Secor Screw Machine, construction of the headstock ... 204
The chuck ... 205
The feed gear ... 205
The turret ... 205
The cross slide ... 205
The stop motions ... 206
Pratt and Whitney's Screw Machine ... 206
Parkhurst's wire feed, construction of the headstock, chuck and feed motion ... 207
Box tools for ... 208
Applications of box tools ... 208
Threading tool for ... 208
Cutting-off tool for ... 208
Special Lathe for wood working ... 208
The construction of the carriage and reducing knife ... 209
Construction of the various feed motions ... 209
Construction of the tailstock ... 209
Lathes for irregular forms ... 210
Axe-handle ... 210
Back knife gauge ... 210
Special, for pulley turning ... 211
Boring and Turning mill or lathe ... 211
Construction of the feed motions ... 213
Construction of the framing and means of grinding the lathe 214

PAGE
Construction of the vertical feed motions. 215
The Morton Poole roll turning lathe. 215
Construction of the slide rest. 216
The tools for. 216
Special Lathes for brass work. 216, 217
Boring Lathe with traversing spindle. 218
Lathe for facing and boring cylinders. 219
Quartering Machine. 219
Heavy upright boring machine. 221
Vertical boring and turning machine. 221

CHAPTER IX.

DRIVING WORK IN THE LATHE.

Drivers, carriers, dogs, or clamps, and their defects 222
Lathe clamps. 222
Equalizing drivers. 223
The Clements driver. 223
Driver and face plate for screw cutting. 223
Shartle's self-tightening dog (Fig. 756). 223
Work driver for turning bolts (Fig. 762). 224
Forms of, for bolt heads. 224
Adjustable, for bolt heads. 224
For threaded work. 225
For steady rest work. 225
For cored work. 225
For wood. 225
Centres for hollow work. 226
For taper work. 226
Lathe Mandrels, or arbors. 227
Drivers for. 227
For tubular work. 227
Expanding mandrels. 227
With expanding cones. 228
With expanding pieces. 228
Expanding, for large work. 228
For threaded work. 228
For nuts, various forms of. 229
For eccentric work. 229
Centring devices for crank axles. 230
The Steady Rest or back rest. 231
Steady rest, improved form of. 232
Cone chuck. 232
Steady rest for square and taper work. 233
The cat head. 233
Clamps for. 233
Follower rests. 234
Chucks and Chucking. 234
Simple forms of chucks. 234
Adjustable chucks for true work. 235
Geared scroll chuck. 235
Little Giant drill chuck. 235
Two-jawed chucks. 236
Box body chucks. 237
Reversible jawed chucks. 237
Three and four-jawed chucks. 237
Combination chucks. 237
The wear of scroll chuck threads. 237
Universal chucks. 238
The wear of chucks. 240
Special forms of chucks. 241
Cushman chuck with independent and connected jaws. 241
Cushman chuck with reversible jaws. 241
Horton combination independent chuck. 241
Locking joint. 241
Graduations. 241
Expanding chucks for ring-work. 241
Cement chuck. 242
Chucks for wood-working lathes. 242
Lathe Face Plates. 243
Face plates, errors in, and their effects. 243
Work-holding straps. 244
Face plate, clamping work on. 245
Forms of clamps for. 245
Examples of chucking work on. 246, 247
For wood work. 247
Special Lathe Chuck for cranks. 248
Face Plate Work, examples of. 249
Errors in chucking. 250
Movable dogs for. 250
The angle plate. 251
Applications of. 251
Angle plate chucking, examples of. 251
Cross-head chucking. 251–253

CHAPTER X.

CUTTING TOOLS FOR LATHES.

Principles governing the shapes of lathe tools. 254
Diamond-pointed, or front tool. 254
PAGE
Principles governing use of tools. 254
Front rake and clearance of front tools. 254
Influence of the height of a tool upon its clearance and keenness. 255
Tools with side rake in various directions. 256
The effect of side rake. 256
The angle of clearance in lathe tools. 257
Variation of clearance from different rates of feed and diameters of work. 257
Round-nosed tools. 258
Utmost Duty of cutting tools. 258
Judging the quality of the tool from the shape of its cutting. 259
Square-nosed tools. 260
The height of lathe tools. 260
Side tools for lathe work. 261
Cutting-off or grooving tools. 262
Facing tools or knife tools. 262
Spring tools. 263
Brass Work, front tools for. 264
Side tools for. 264
Threading tools. 264
Internal threading tools. 264
The length of threading tools. 265
The level of threading tools. 265
Gauges for threading tools. 266
Setting threading tools. 266
Circular threading tools. 267
Threading tool holders. 267
Chasers. 268
Chaser holders. 268
Setting chasers. 268
Square Threads, clearance of tools for. 269
Diameter at the roots of threads. 269
Cutting coarse pitch square threads. 269
Dies for finishing square threads. 269
Tool Holders for outside work. 270
For circular cutters. 272
Swiveled. 273
Combined tool holders and cutting-off tools. 273
Power required to drive cutting tools. 273

CHAPTER XI.

DRILLING AND BORING IN THE LATHE.

The Twist Drill. 274
Twist drill holders. 274
The diametral clearance of twist drills. 274
The front rake of twist drills. 275
The variable clearance on twist drills as usually ground. 275
Demonstration of the common error in grinding twist drills. 276
The effects of improper grinding upon twist drills. 276
Table of speeds and feeds for twist drills. 277
Special drill for boring small holes very deep. 278
Grinding twist drills by hand. 279
Twist drills for wood work. 279
Tailstock Chucks for drilled work. 279
Flat Drills for lathe work. 280
Holders for lathe work. 281
Half-round bit or pod auger. 281
With front rake for wrought iron or steel. 281
With adjustable cutter. 281
For very true work. 281
Chucking Reamer. 281
The number of teeth for reamers. 282
Spacing the teeth of reamers. 282
Spiral teeth for reamers. 282
Grinding the teeth of reamers. 282
Various positions of emery-wheel in grinding reamers. 282
Chucking reamers for true work. 283
Shell reamers. 283
Arbor for shell reamers. 283
Rose-bit or rose reamers. 283
Shell rose reamers. 284
Adjustable reamers. 284
Stepped reamers for taper work. 285
Half-round reamers. 285
Reamers for rifle barrels. 285
Boring Tools for lathe work. 285
Countersinks. 285
Shapes of lathe boring tools. 285
Boring tools for brass work. 286
The spring of boring tools. 286
Boring tools for small work. 287
Boring tool holders. 287
Boring Devices for Lathes. 288
Boring Heads. 288
Boring Bars. 289
Boring bar cutters. 289
Three *versus* four cutters for boring bars. 290

PAGE
Boring bars with fixed heads ... 290
With sliding heads ... 290
Bar cutters, the shapes of ... 291
Boring head with nut feed ... 291
Boring bars for taper work, various forms of ... 292
Boring double-coned work ... 293
Boring bar, centres for ... 293
Cutting Speeds and feeds for wrought iron ... 294
Examples of speeds taken from practice ... 295

CHAPTER XII.

EXAMPLES IN LATHE WORK.

Technical Terms used in the work ... 296
Lathe Centres ... 296
Devices for truing ... 297
Tools for testing the truth of, for fine work ... 298
Shapes of, for light and heavy work ... 299
Centre Drilling, attachment for lathes ... 300
The error induced by straightening work after ... 300
Machine ... 300
Combined centre-drill and countersink ... 300
Countersink with adjustable drill ... 300
Centring square ... 300
Centre-punch ... 300
Centre-punch guide ... 301
Centring work with the scribing block ... 301
Finding the centre of very rough work ... 301
Centre-drill chuck ... 302
The proper form of countersink for lathe work ... 302
Countersinks for lathe work ... 302
Various forms of square centres ... 303
The advantage of the square centre for countersinking ... 303
Novel form of countersink for hardened work ... 303
Chucks for centre-drilling and countersinking ... 303
Recentring turned work ... 304
Straightening work in the lathe ... 304
Centring machine ... 304
Chucks connected by gearing ... 304
The centring chuck ... 305
Positive stop for regulating drill action ... 305
Temperature of work ... 305
Straightening Work. Straightening machine for bar iron ... 305
Hand device for straightening lathe work ... 305
Chuck for straightening wire ... 305
Cutting Rods into small pieces of exact length, tools for ... 305
Roughing cuts, the change of shape of work that occurs from removing the surface by ... 306
Feeds for ... 306
Rates of feed for ... 307
Finishing Work, the position of the tool for ... 307
Finishing cast-iron with water ... 307
Specks in finished cast-iron work ... 307
Scrapers for finishing cast-iron work ... 307
Method of polishing lathe work ... 308
Filing lathe work ... 308
The use of emery paper on lathe work ... 308
The direction of tool feed in finishing long work ... 309
Forms of laps for finishing gauges or other cylindrical lathe work ... 310
Forms of laps for finishing internal work ... 311
Grinding and polishing clamps for lathe work ... 311
Burnishing lathe work ... 311
Taper Work, turning ... 312
The wear of the centres of ... 312
Setting over the tailstock to turn ... 312
Gauge for setting over ... 313
Fitting ... 313
Grinding ... 313
The order of procedure in turning ... 313
The influence of the height of the tool in producing true ... 314
Special Forms. Curved work ... 314, 315
Standard gauges for taper work ... 316
Methods of turning an eccentric ... 317
Turning a cylinder cover ... 318
Turning pulleys ... 318
Chucking device for pulleys ... 318
Cutting Screws in the lathe ... 319
The arrangement of the change gears ... 319
The intermediate wheels ... 319
The compounded gears ... 320
Finding the change wheels to cut a given thread ... 320
Finding the change wheels for a lathe whose gears are compounded ... 321
Finding the change gears for cutting fractional pitches ... 321
To find what pitch of thread the wheels already on the lathe will cut ... 322
Cutting left-hand threads ... 322
Cutting double threads ... 322
PAGE
Cutting screws whose pitches are given in the terms of the metric system ... 322
Cutting threads on taper work ... 323
Errors in cutting threads on taper work ... 324

CHAPTER XIII.

EXAMPLES IN LATHE WORK (Continued).

Ball Turning with tubular saw ... 325
With a single tooth on the end of a revolving tube ... 325
With a removable tool on an arbor ... 325
Tool holder with worm feed ... 325
By hand ... 325
Cams, cutting in the lathe ... 326
Improved method of originating cams in the lathe ... 326
Motions for turning cams in the lathe ... 326, 327
Application of cam motions to special work ... 327
Cam chuck for irregular work ... 328
Milling or knurling tool ... 328
Improved forms of ... 328
Winding Spiral Springs in the lathe ... 329
Hand Turning ... 330
The heel tool ... 330
The graver and its applications ... 330, 331
Hand side tools ... 331
Hand round-nosed tools for iron ... 331
Hand finishing tool ... 331
Hand Tools, for roughing out brass work ... 332
Various forms and applications of scrapers ... 332, 333
Clockmakers' hand tool for special or standard work ... 334
Centring needle-bars, etc ... 335
Round finish ... 335
Finishing small caps ... 335
Screw cutting with hand tools ... 335
Outside and inside chasers ... 335
Hobs and their uses ... 335
The application of chasers, and errors that may arise from the position in which they are presented to the work ... 336
Errors commonly made in cutting up inside chasers ... 337
V-tool for starting outside threads ... 337
Starting outside threads ... 338
Cutting taper threads ... 338
Wood turning hand tools ... 338
The gauge and how to use it ... 338
The chisel and its use ... 339
The skew chisel and how to use it ... 339
Wood turners' boring tools for lathe work ... 340

CHAPTER XIV.

MEASURING MACHINES, TOOLS AND DEVICES.

Standards of Measurements, in various countries ... 341
Use of, by sight and by the sense of feeling ... 341
Variations in standard gauges ... 341
The necessity for accurate standards ... 341
The Rogers Bond standard measuring machine ... 342
Details of construction of ... 343, 344
The principle of construction of ... 344
The methods of using ... 345
The Whitworth measuring machine ... 345
The Betts Machine Company's measuring machine ... 346
Professor Sweet's measuring machine ... 347
Measuring machine for sheet metal ... 348
Measuring machine, microscopic ... 348
Measurements finer than one fifty-thousandth of an inch ... 348
Circle, division of the ... 348
Throughton's method of dividing the circle ... 348, 349
Ramsden's dividing engine ... 349
The construction of ... 350, 351
Pratt and Whitney's dividing device ... 352
Practical application of ... 353
Index wheel, method of originating, by R. Hoe & Co ... 353
Application of the index wheel (Hoe & Co's system) ... 353
Micrometer Caliper and its principle of construction ... 354, 355
Use close to a shoulder ... 354
Readings for ten-thousandths of an inch ... 354
Gauges. Standard plug and collar gauges ... 356
Methods of comparing standard plug and collar gauges ... 356
The effects of variations of temperature upon standard gauges ... 356
Plug and collar gauges for taper work ... 357
The Baldwin standards for taper bolts ... 359
Workmen's gauges for lathe work ... 359
Calipers, outside, the various forms of ... 360
Inside calipers ... 360
Calipers with locking devices ... 360
Spring calipers ... 360
The methods of holding and using ... 361, 362
Keyway calipers ... 363

PAGE
The advantages of calipers ... 363
Fitting. The four kinds of fit in machine work ... 363
The influence of the diameter of the work in limiting the application of standard gauges ... 363
The wear of tools and its influence upon the application of the standard gauge system ... 364
The influence of the smoothness of the surface upon the allowance to be made for drilling or hydraulic fits ... 365
Examples of allowance for hydraulic fits ... 365
Parallel holes and taper plugs for hydraulic fits ... 365
Practicable methods of testing the fit of axle brasses forced in by hydraulic pressure ... 366
Shrinkage or contraction fits ... 366
Allowances for ... 366
Gauge for ... 367
The shrinkage system at the Royal Gun Factory at Woolwich ... 367
Experiments by Thomas Wrightson upon the shrinkage of iron under repeated heatings and coolings ... 368–374
Shrinking work, to refit it ... 374, 375

CHAPTER XV.

MEASURING TOOLS.

End Measurements of large lathe work ... 376
Template gauges for ... 376
Trammels or Trains ... 377
Adjustable gauges for ... 377
Compasses—Dividers ... 377
Compass calipers ... 378
Key Seating rule ... 378
Surface Gauge ... 378
Pattern makers' pipe gauge ... 379
Squares. The try square ... 379
The T square ... 379
Various methods of testing squares ... 379, 380
Bevel squares ... 380
Bevel Protractors ... 380
Hexagon Gauge ... 381
Straight Edge and its applications ... 381, 382
Winding strips and their application ... 382
Surface Plate or planimeter ... 383
Templates for curves ... 384
Wire Gauges, notch ... 384
Standard gauges for wire, etc ... 384, 386
Gauge for music wire ... 386
Brown and Sharpe wire gauge ... 387
Birmingham wire gauge for rolled shell silver and gold ... 387
Sheet iron gauge, Russian ... 387
Galvanized iron ... 387
Belgian sheet zinc ... 387
American sheet zinc ... 387
Rifle Bore gauge ... 387
Strength of Wire, Kirkaldy's experiments ... 387, 388

CHAPTER XVI.

SHAPING AND PLANING MACHINES.

Shaping machines ... 389
Work table moved to feed the work to the cut ... 389
Quick return shaper ... 389
Construction of swivel head ... 389
Slide ... 390
Vice chuck ... 390
Feed motion ... 390
Hand shaping machine ... 391
Quick Return Motion, Whitworth's ... 391
Vice Chucks, the principles of construction of plain, for planing machine ... 392
Morton shaping machine ... 392
Detailed description of ... 392
Reversing mechanism ... 393
Tool holders ... 394
Setting work in Shaper Vices ... 394
Holding taper work in ... 394
Holding cylindrical work in ... 394
Swiveling ... 395
Rapid motion ... 396
For vice work ... 396
Centres for shaping machines ... 397
Traveling Head in shaping machine ... 397
Planer Shapers or shaping machines, having a tappet motion for reversing the direction of motion ... 398, 399
Quick Return Motion shaping machines, link ... 399
The Whitworth ... 400
Comparisons of the link motion and Whitworth ... 401
Simple Crank, investigating the motion of ... 401
Hendry Machine Co.'s shaper ... 402
Friction clutch ... 402
Uniform speed ... 402
Instantaneous reverse ... 402
Planing Machines, or planer ... 402
The various motions of ... 402, 403
The table driving gear ... 404
Planing machine with double heads ... 404
Rotary planing machine ... 405

CHAPTER XVII.

PLANING MACHINERY.

The Sellers planing machine ... 406
The belt shifting mechanism ... 406
The automatic feed motions ... 406, 407
Sellers planer, improved ... 407
Increase of speed ... 407
Driving arrangement ... 408
Friction clutches ... 409
Abutment cones ... 409
Adjustment for wear ... 409
Countershafting ... 409
Feed mechanism ... 409
Shifting mechanism ... 410
Device for transmitting and arresting motion ... 410
Post planing machine ... 411
Varied cutting strokes ... 411
Tool head on radius bar ... 411
Open side planer ... 411
Gray Co.'s Planers ... 411
Spiral gear driving mechanism ... 411
Vertical motion of the feed rack ... 411
Throwing out the feed of all heads at once ... 411
Independent adjustment of feed device of side heads ... 411
Four cutting tools, starting the cut simultaneously ... 412
Fitchburg Machine Works' Planer ... 412
Extra head with automatic vertical feed ... 412
Sliding Head ... 412
Cross Bar ... 412
Slides of Planers, the various forms of construction of ... 412
Wear of the Slides of planer heads, various methods of taking up the ... 412
Swivel heads ... 412
Tool Aprons ... 413
Swivel Tool-Holding devices for planers ... 413
Planer Heads, graduations of ... 413
Safety devices for ... 413
Feed motions for ... 414
V-guideways for ... 414
Flat guideways for ... 415
Oiling devices for ... 415
Planing Machine Tables ... 415
Slots and holes in planing machine tables ... 416
Forms of bolts for planer tables ... 417
Supplementary tables for planer tables ... 417
Angle plates for planer tables ... 418
Chucking devices for planer tables ... 418
Planer Centres ... 418
Planer Chucks ... 419
For spiral grooved work ... 419
For curved work ... 420
Chucking machine beds on planer tables ... 420
For large planing machines ... 422
Chucking the halves of large pulleys on a planer ... 423
Gauges for planing V-guideways in machine beds ... 421
Planing guideways in machine beds ... 422
Gauge for planer tools ... 424
Planer Tools, the shapes of ... 424
For broad-finishing feeds ... 424
The clearance of ... 424
For slotted work ... 424
Planer Tool Holder, with swivel tool post ... 425
Various applications of ... 425

CHAPTER XVIII.

DRILLING MACHINES.

Drilling Machines. General description of a power drilling machine ... 426
Turret drilling machine ... 426
Tapping device ... 427
Reversing feature ... 427
Lever feed ... 429
Barnes' sensitive drill with friction disk ... 429
Regulating drill speed while running ... 429
Foot or hand feed drill ... 429
For deep drilling ... 429
Bickford Company's drills ... 429
Counterbalanced spindle ... 429
Boiler maker's drill ... 429
With automatic and quick return feed motions ... 430

PAGE
Improved, with simple belt and uniform motion, two series of rates of automatic feed, and guide for boring bar 430
Gould & Eberhardt's improved drill press 430
Feed speed by friction disk 430
Tapping attachment 430
Lodge Davis Co.'s drilling machine 431
Automatic stop motion 431
Radial 431
Cincinnati Radial Drill Co.'s machines 431
Swiveling spindle head 431
Universal beam drill 431
Double column machine 431
Post drill 431
Portable drilling head 432
Drilling and Boring machine 432
Feed motion of 432
Combined Drilling Machine and lathe 433
Boring Machine, horizontal 433
Drilling Machine, three spindle 434
Four spindle 434
Quartering Machine 434
Drilling and Turning Machine for boiler makers 435
Feed motions of 436
For boiler shells 436
Three or four holes at once 438
For car wheels 438
Universal Boring, Drilling, and Milling Machine 438

CHAPTER XIX.

DRILLS AND CUTTERS FOR DRILLING MACHINES.

Jigs or Fixtures for drilling machines 439
Limits of error in 439
Examples of, for simple work, as for links, etc 440
Considerations in designing 440
For drilling engine cylinders 440, 441
For cutting out steam ports 441
Drills and Cutters for drilling machines 442
Table of sizes of twist drills, and their shanks 442
Flat drills for drilling machines 442
Errors in grinding flat drills 443
The tit-drill 443
The lip drill 443
Cotter or keyway drills 446
Drilling holes true to location with flat drills 444
Drilling hard metal 444
Table of sizes of tapping holes 445
Drill Shanks and sockets 445
Improved form of drill shank 446
Square shanked drills and their disadvantages 446
Drill Chucks 446
Stocks and Cutters for drilling machines 447
Tube plate cutters 448
Stocks and Cutters. Adjustable stock and cutter 448
Facing tool with reamer pin 449
Counterbores for drilling machines 449
Drill and counterbore for wood work 449
Facing and countersink cutters 449
Device for drilling square holes 450
Device for drilling taper holes in a drilling machine 451

CHAPTER XX.

HAND-DRILLING AND BORING TOOLS, AND DEVICES.

The Brad-awl 452
Bits. The gimlet bit 452
The German bit 452
The nail bit 452
The spoon bit 452
The nose bit 453
PAGE
The auger bit 453
Cook's auger bit 453
Principles governing the shapes of the cutting edges of auger bits 453
Auger bit for boring end grain wood 453
The centre bit 454
The expanding bit 454
Drills. Drill for stone 454
The fiddle drill 455
The fiddle drill with feeding device 455
Drill with cord and spring motion 455
Drill stock with spiral grooves 455
Drill brace 455
Drill brace with ratchet motion 456
Universal joint for drill brace 456
Drill brace with multiplying gear and ratchet motion 456
Breast drill with double gear 456
Drilling levers for blacksmiths 457
Drill cranks 457
Ratchet brace 457
Flexible shaft for driving drills 458
Drilling device for lock work 459
Hand drilling machine 459
Slotting Machine 459
Sectional view of 460
Key-Seating machines 460
Slotting or paring machine 460
Relief motion for the tool 460
Adjustable nut 461
Friction brake 461
Tool holders 461
Tools 461, 462

CHAPTER XXI.

THREAD-CUTTING MACHINERY AND BROACHING PRESS.

Pipe Threading, die stock for, by hand 463
Die stock for, by power 463
Pipe threading machines, general construction of 463
Bolt Threading hand machine 464
With revolving head 465
Power threading machine 465
With automatic stop motion 466
Construction of the head 466
Construction of the chasers 466
Bolt threading machine with back gear 467
Single rapid bolt threading machine 467
Double rapid bolt threading machine 467
Construction of the heads of the rapid machines 468
Bolt cutting machines 469
Bolt threading machinery, the Acme 468
Construction of the head of 468–470
Capacity of 470
Cutting Edges for taps, the number of 471
Examples when three and when four cutting edges are used, and the results upon bolts that are not round 471, 472
Demonstration that four cutting edges are correct for bar iron 472
Positions of Dies, or chasers, in the heads of bolt cutting machine 473
Dies, methods of hobbing to avoid undue friction 473
The construction of, for bolt threading machines 473
Method of avoiding friction in thread cutting 474
Hob for threading 474
Cutting speeds for threading 474
Nut Tapping machine 475
Automatic socket for 475
Rotary 475
Three-spindle 475
Pipe Threading Machine 475–477
Tapping Machine for steam pipe fittings 478
Broaching Press 478
Principles of broaching 478
Examples in the construction of broaches 479

FULL-PAGE PLATES.

VOLUME I.

			Facing
		PORTRAIT OF THE AUTHOR	TITLE PAGE
Frontispiece		EXAMPLE OF LATHE OPERATION	I
PLATE	I.	WORM AND WORM WHEEL	28
"	II.	TEMPLATE CUTTING MACHINES FOR GEAR TEETH	34
"	III.	GEAR CUTTING AND GENERATING MACHINE	35
"	IV.	FORMS OF SCREW THREADS	85
"	V.	MEASURING AND GAUGING SCREW THREADS	93
"	VI.	MEASURING SCREW THREADS	95
"	VI.—A.	SCREWS, STUDS, AND BOLTS	116
"	VII.	END ADJUSTMENT AND LOCKING DEVICES	117
"	VII.—A.	THE F. E. REED LATHE	124
"	VII.—B.	THE F. E. REED LATHE	125
"	VII.—C.	THE F. E. REED LATHE	126
"	VII.—D.	THE F. E. REED LATHE	127
"	VII.—E.	HAZLETT AND LORD'S PATENT TAPER TURNING ATTACHMENT	128
"	VIII.	EXAMPLES IN LATHE CONSTRUCTION	148
"	IX.	CHUCKING LATHES	150
"	X.	EXAMPLES OF LATHES	151
"	XI.	EXAMPLES OF SMALL LATHES	150
"	XII.	DETAILS OF SET OVER LATHE	151
"	XIII.	LATHES FOR BRASS WORKERS	152
"	XIV.	DETAILS OF KEY LATHE	153
"	XV.	EXAMPLES OF LATHES	152
"	XVI.	EXAMPLES OF LATHES	153
"	XVI.—A.	EXAMPLES OF LATHES	152
"	XVII.	FORMING MONITOR LATHE	153

			Facing
PLATE	XVIII.	IMPROVED FORMING LATHE TOOL REST	152
"	XIX.	MONITOR LATHES	153
"	XX.	FRICTION HEAD OF MONITOR LATHE	152
"	XXI.	WIRE FEED OF SCREW MACHINE	153
"	XXII.	EXAMPLES IN HEAVY LATHES	152
"	XXIII.	SURFACING LATHE WITH CUTTER FACE PLATE	153
"	XXIV.	EXAMPLES OF CHUCKING LATHES	154
"	XXV.	DOUBLE AXLE LATHE	155
"	XXVI.	EXAMPLES IN GAP LATHES	154
"	XXVII.	FRICTION CLUTCH MOTION FOR LATHES, ETC.	155
"	XXVIII.	COMBINATION TURRET LATHE	154
"	XXVIII.—A.	THE FLAT TURRET LATHE AND ITS PRODUCT	155
"	XXIX.	THE FLAT TURRET LATHE	154
"	XXX.	WORK DONE BY THE FLAT TURRET LATHE	155
"	XXXI.	DETAILS AND WORK OF THE FLAT TURRET LATHE	156
"	XXXI.—A.	TURRET AND HEAD DETAILS OF FLAT TURRET LATHE	157
"	XXXII.	DETAILS OF FLAT TURRET LATHE	156
"	XXXIII.	DETAILS OF FLAT TURRET LATHE	157
"	XXXIV.	END ELEVATION OF FLAT TURRET LATHE	156
"	XXXV.	FLAT TURRET LATHE TOOL HOLDERS	157
"	XXXVI.	SCREW CUTTING MACHINE	158
"	XXXVI.—A.	J. E. REINECKER LATHE	159
"	XXXVI.—B.	DETAILS OF REINECKER LATHE	158
"	XXXVI.—C.	DETAILS OF REINECKER LATHE	159
"	XXXVI.—D.	GISHOLT LATHE	160
"	XXXVI.—E.	GISHOLT LATHE	161
"	XXXVI.—F.	NEW HAVEN MANUFACTURING CO.'S LATHE	160
"	XXXVI.—G.	PATTERN MAKERS' LATHES	161
"	XXXVI.—H.	PATTERN MAKERS' LATHES	160
"	XXXVI.—I.	ENGINE LATHE	161
"	XXXVI.—J.	DETAILS IN LATHE CONSTRUCTION	171
"	XXXVI.—K.	DETAILS IN LATHE CONSTRUCTION	172
"	XXXVII.	TOOL-HOLDING AND ADJUSTING APPLIANCES	173
"	XXXVIII.	WATCHMAKER'S LATHE	188

			Facing
PLATE	XXXIX.	DETAILS OF WATCHMAKER'S LATHE	189
"	XL.	SCREW SLOTTING AND HAND LATHES	190
"	XLI.	LATHE WITH DIFFERENTIAL SPEED MOTION	191
"	XLII.	CUTTING OFF MACHINE AND GRINDING LATHE	192
"	XLIII.	GRINDING LATHE	193
"	XLIV.	DETAILS OF GRINDING LATHE	192
"	XLV.	DETAILS OF GRINDING LATHE	193
"	XLVI.	IMPROVED UNIVERSAL GRINDING MACHINE	194
"	XLVII.	IMPROVED UNIVERSAL GRINDING MACHINE	195
"	XLVIII.	IMPROVED UNIVERSAL GRINDING MACHINE	196
"	XLIX.	IMPROVED UNIVERSAL GRINDING MACHINE	197
"	L.	IMPROVED UNIVERSAL GRINDING MACHINE	196
"	LI.	IMPROVED UNIVERSAL GRINDING MACHINE	197
"	LII.	SPECIAL CHUCK—CALENDER ROLL GRINDING LATHE	198
"	LIII.	DETAILS OF CALENDER ROLL GRINDING LATHE	199
"	LIV.	EXAMPLES OF SCREW MACHINES	200
"	LV.	ROLL TURNING LATHE	215
"	LV.—A.	HEAVY UPRIGHT BORING MACHINE	220
"	LV.—B.	VERTICAL BORING AND TURNING MACHINE	221
"	LVI.	LATHE CHUCKS	235
"	LVII.	LATHE CHUCKS	241
"	LVIII.	EXAMPLES IN ANGLE CHUCKING	252
"	LIX.	CENTRING MACHINE	304
"	LX.	STRAIGHTENING LATHE WORK	305
"	LXI.	METHODS OF BALL TURNING	325
"	LXII.	HAND LATHE AND APPLIANCES	334
"	LXIII.	CENTRING AND FINISHING DUPLICATE PARTS	335
"	LXIV.	THE ROGERS-BOND UNIVERSAL COMPARATOR	342
"	LXV.	MEASURING MACHINE	348
"	LXVI.	MEASURING MACHINE	348
"	LXVII.	DIVIDING ENGINE AND MICROMETER	354
"	LXVIII.	MICROMETER CALIPERS	355
"	LXIX.	SHAPING MACHINE	390
"	LXIX.—A.	SHAPING MACHINES	391

			Facing
PLATE	LXIX.—B.	MORTON SHAPING MACHINE	392
"	LXIX.—C.	MORTON SHAPING MACHINE	393
"	LXIX.—D.	MORTON SHAPING MACHINE	394
"	LXX.	SHAPING MACHINES AND TABLE-SWIVELLING DEVICES	398
"	LXXI.	SHAPING MACHINE	402
"	LXXII.	DETAILS OF SHAPING MACHINE	403
"	LXXIII.	EXAMPLES OF PLANING MACHINES	404
"	LXXIV.	PLANING MACHINERY	406
"	LXXV.	DETAILS OF PLANING MACHINE	407
"	LXXVI.	DETAILS OF PLANING MACHINE	406
"	LXXVII.	DETAILS OF PLANING MACHINE	407
"	LXXVIII.	DETAILS OF PLANING MACHINE	406
"	LXXIX.	DETAILS OF PLANING MACHINE	407
"	LXXX.	DETAILS OF PLANING MACHINE	406
"	LXXXI.	DETAILS OF PLANING MACHINE	407
"	LXXXII.	DETAILS OF PLANING MACHINE	406
"	LXXXIII.	DETAILS OF PLANING MACHINE	407
"	LXXXIII.—A.	DETAILS OF PLANING MACHINE	408
"	LXXXIII.—B.	DETAILS OF PLANING MACHINE	409
"	LXXXIII.—C.	DETAILS OF PLANING MACHINE	409
"	LXXXIII.—D.	POST PLANING MACHINE	410
"	LXXXIII.—E.	OPEN SIDE PLANER	411
"	LXXXIV.	PLANING MACHINE	410
"	LXXXV.	DETAILS OF PLANING MACHINE	411
"	LXXXVI.	PLANING MACHINE	412
"	LXXXVII.	PLANING MACHINE	413
"	LXXXVIII.	DETAILS OF PLANER HEADS	412
"	LXXXIX.	DETAILS OF PLANER HEADS	413
"	XC.	DETAILS OF PLANER HEADS	413
"	XCI.	EXAMPLES IN PLANING WORK	422
"	XCI.—A.	TOOL HOLDERS FOR PLANING MACHINES	425
"	XCI.—B.	TURRET DRILLING MACHINE	426
"	XCI.—C.	TURRET DRILLING MACHINE	427
"	XCII.	LIGHT DRILLING MACHINES	428

			Facing
PLATE	XCIII.	SMALL DRILLING MACHINES	429
"	XCIV.	DRILLING MACHINES	428
"	XCV.	DRILLING MACHINES	429
"	XCVI.	HEAVY DRILLING MACHINE	428
"	XCVII.	DRILLING MACHINES WITH FRICTION SPEED	429
"	XCVIII.	DRILLING MACHINE WITH STOP MOTION	430
"	XCIX.	DETAILS OF DRILLING MACHINE	431
"	C.	RADIAL DRILLING MACHINE	430
"	CI.	DETAILS OF HEAD OF RADIAL DRILLING MACHINE	431
"	CII.	DOUBLE COLUMN RADIAL DRILL	430
"	CIII.	DOUBLE COLUMN RADIAL DRILL WITH TWO HEADS	431
"	CIV.	POST AND PORTABLE DRILLING HEADS	430
"	CIV.—A.	DRILLING MACHINES	431
"	CV.	EXAMPLES IN BORING MACHINERY	434
"	CVI.	BOILER-DRILLING MACHINERY	436
"	CVII.	SLOTTING MACHINE	460
"	CVIII.	DETAILS OF SLOTTING MACHINE	461
"	CIX.	BOLT-CUTTING MACHINE	468
"	CX.	BOLT-CUTTING MACHINE	469
"	CXI.	NUT-TAPPING MACHINERY	475

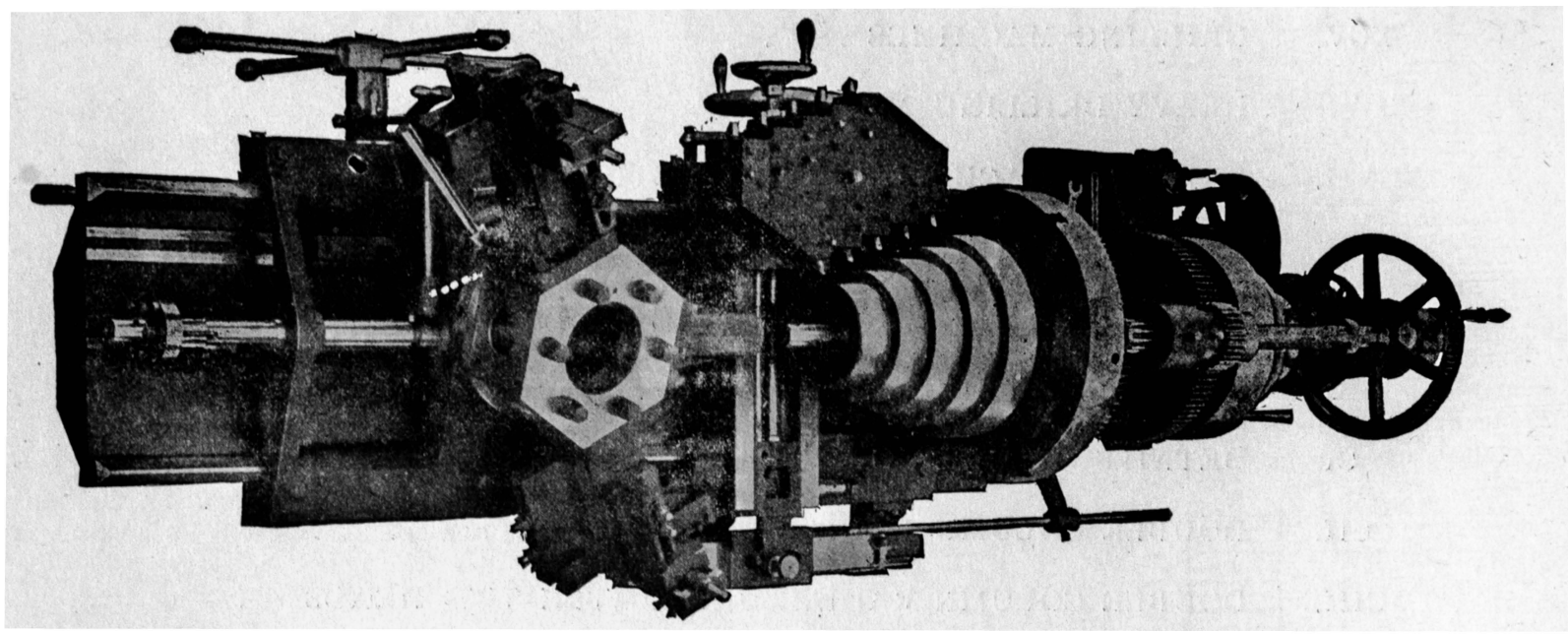

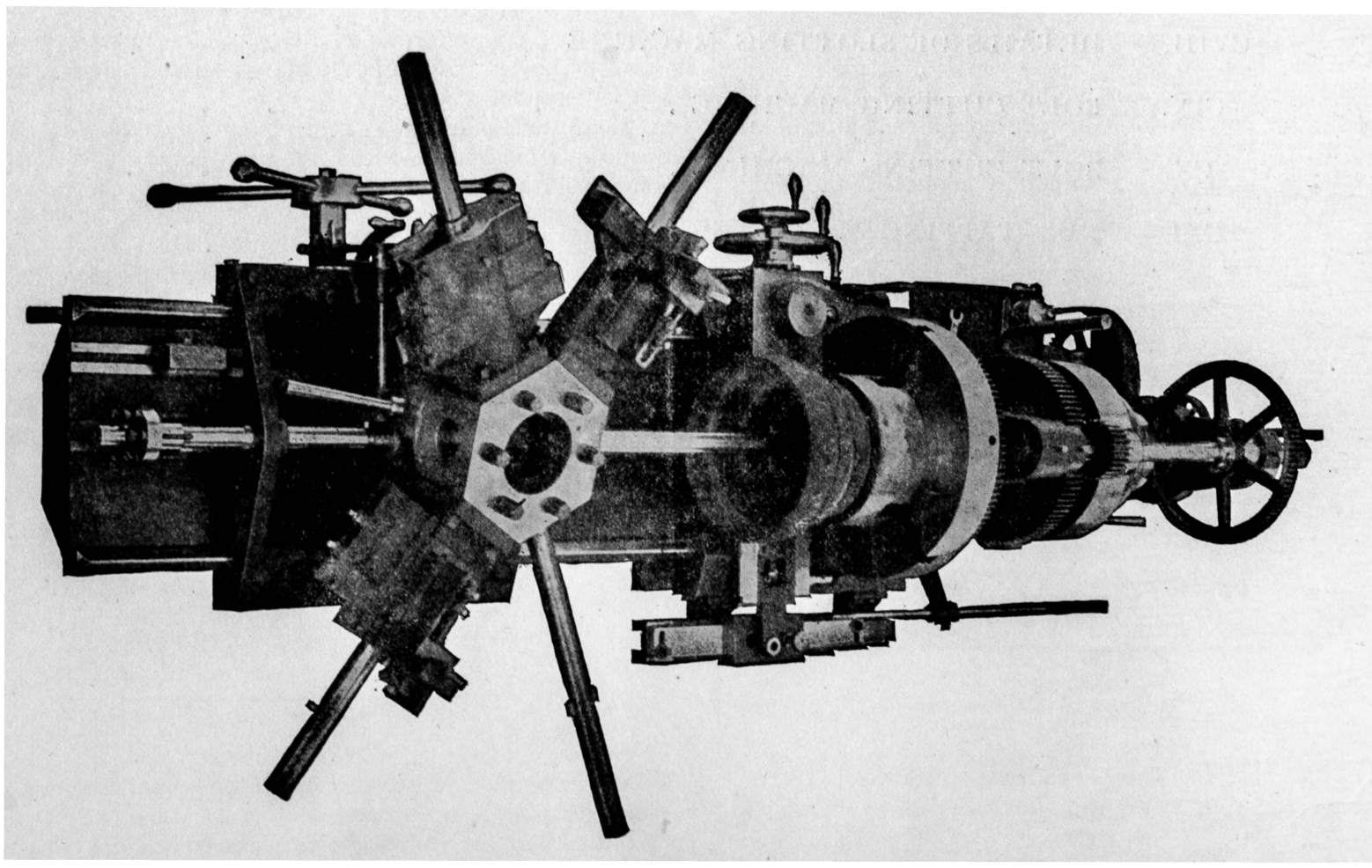

FINISHING CONE PULLEYS.

MODERN
MACHINE SHOP PRACTICE.

CHAPTER I.—THE TEETH OF GEAR-WHEELS.

A WHEEL that is provided with teeth to mesh, engage, or gear with similar teeth upon another wheel, so that the motion of one may be imparted to the other, is called, in general terms, a gear-wheel.

When the teeth are arranged to be parallel to the wheel-axis, as in Fig. 1, the wheel is termed a spur-wheel. In the figure, A

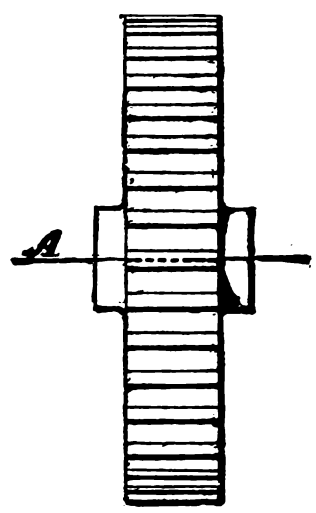

Fig. 1.

represents the axial line or axis of the wheel or of its shaft, to which the teeth are parallel while spaced equidistant around the rim, or face, as it is termed, of the wheel.

When the wheel has its teeth arranged at an angle to the shaft, as in Fig. 2, it is termed a bevel-wheel, or bevel gear; but when

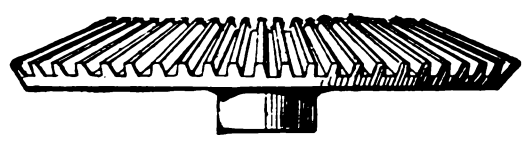

Fig. 2.

this angle is one of 45°, as in Fig. 3, as it must be if the pair of wheels are of the same diameter, so as to make the revolutions of

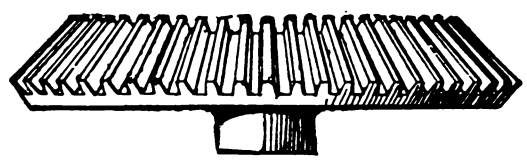

Fig. 3.

their shafts equal, then the wheel is called a mitre-wheel. When the teeth are arranged upon the radial or side face of the wheel,

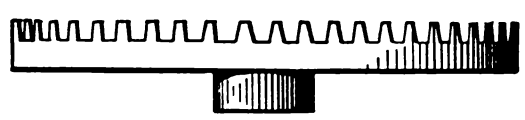

Fig. 4.

as in Fig. 4, it is termed a crown-wheel. The smallest wheel of a pair, or of a train or set of gear-wheels, is termed the pinion; and when the teeth are composed of rungs, as in Fig. 5, it is termed a lantern, trundle, or wallower; and each cylindrical piece serving as a tooth is termed a *stave*, *spindle*, or *round*, and by some a *leaf*.

An annular or internal gear-wheel is one in which the faces of the teeth are within and the flanks without, or outside the pitch-circle, as in Fig. 6; hence the pinion P operates within the wheel.

When the teeth of a wheel are inserted in mortises or slots

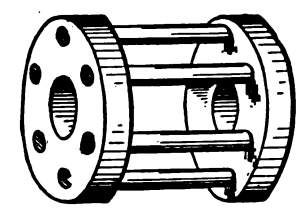

Fig. 5.

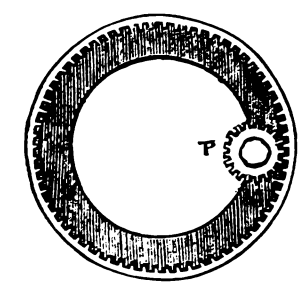

Fig. 6.

provided in the wheel-rim, it is termed a mortised-wheel, or a cogged-wheel, and the teeth are termed cogs.

When the teeth are arranged along a plane surface or straight line, as in Fig. 7, the toothed plane is termed a *rack*, and the wheel is termed a pinion.

A wheel that is driven by a revolving screw, or worm as it is termed, is called a worm-wheel, the arrangement of a worm and worm-wheel being shown in Fig. 8. The screw or worm is sometimes also called an endless screw, because its action upon the wheel does not come to an end as it does when it is revolved in one continuous direction and actuates a nut. So also, since the worm is tangent to the wheel, the arrangement is sometimes called a wheel and tangent screw.

The diameter of a gear-wheel is always taken at the pitch circle, unless otherwise specially stated as "diameter over all," "diameter of addendum," or "diameter at root of teeth," &c., &c.

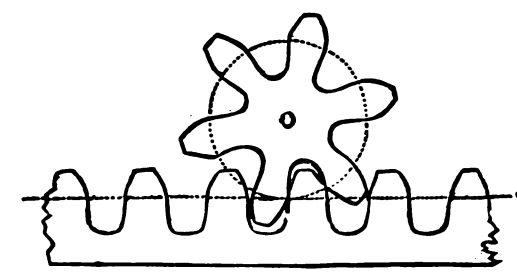

Fig. 7.

When the teeth of wheels engage to the proper distance, which is when the pitch circles meet, they are said to be in gear, or geared together. It is obvious that if two wheels are to be geared together their teeth must be the same distance apart, or the same *pitch*, as it is called.

The designations of the various parts or surfaces of a tooth of a gear-wheel are represented in Fig. 9, in which the surface A is the face of the tooth, while the dimension F is the width of face of the wheel, when its size is referred to. B is the flank or distance from the pitch line to the root of the tooth, and C the

point. H is the *space*, or the distance from the side of one tooth to the nearest side of the next tooth, the width of space being measured on the pitch circle P P. E is the depth of the tooth, and G its thickness, the latter also being measured on the pitch circle P P. When spoken of with reference to a tooth,

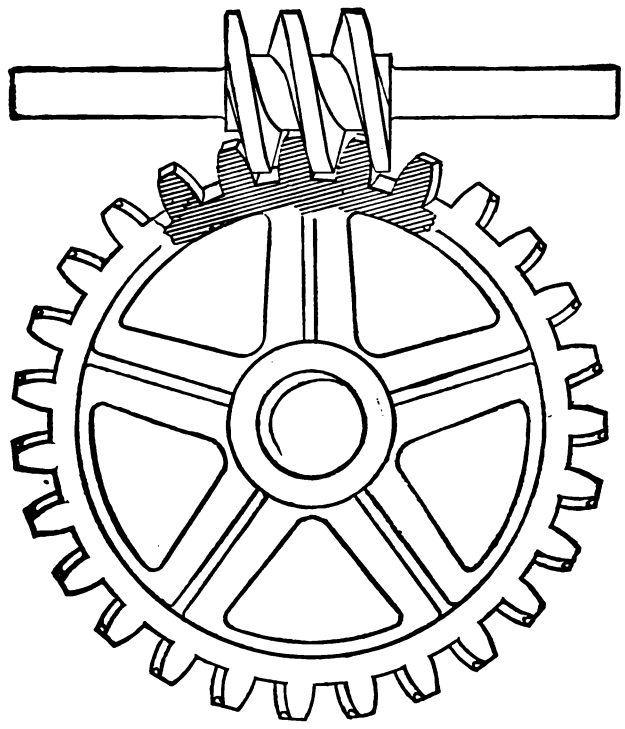

Fig. 8.

P P is called the pitch line, but when the whole wheel is referred to it becomes the pitch circle.

The points C and the surface H are true to the wheel axis.

The teeth are designated for measurement by the pitch; the height or depth above and below pitch line; and the thickness.

The pitch, however, may be measured in two ways, to wit, around the pitch circle A, in Fig. 10, which is called the arc or circular pitch, and across B, which is termed the chord pitch.

In proportion as the diameter of a wheel (having a given pitch) is increased, or as the pitch of the teeth is made finer (on a wheel

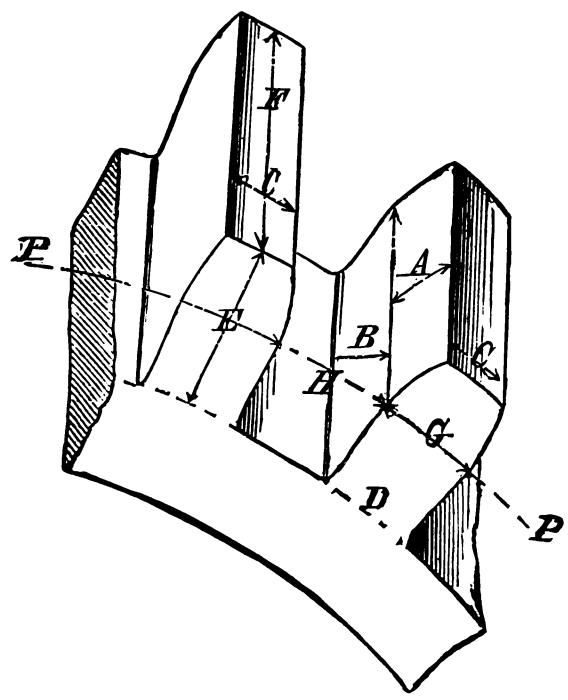

Fig. 9.

of a given diameter) the arc and chord pitches more nearly coincide in length. In the practical operations of marking out the teeth, however, the arc pitch is not necessarily referred to, for if the diameter of the pitch circle be made correct for the required number of teeth having the necessary arc pitch, and the wheel be accurately divided off into the requisite number of divisions with compasses set to the chord pitch, or by means of an index plate, then the arc pitch must necessarily be correct, although not referred to, save in determining the diameter of the wheel at the pitch circle.

The difference between the width of a space and the thickness of the tooth (both being measured on the pitch circle or pitch line) is termed the clearance or side clearance, which is necessary to prevent the teeth of one wheel from becoming locked in the spaces of the other. The amount of clearance is, when the teeth are cut to shape in a machine, made just sufficient to prevent contact on one side of the teeth when they are in proper gear (the pitch circles meeting in the line of centres). But when the teeth are cast upon the wheel the clearance is increased to allow for the slight inequalities of tooth shape that is incidental to casting them. The amount of clearance given is varied to suit the method employed to mould the wheels, as will be explained hereafter.

The line of centres is an imaginary line from the centre or axis of one wheel to the axis of the other when the two are in gear; hence each tooth is most deeply engaged, in the space of the other wheel, when it is on the line of centres.

There are three methods of designating the sizes of gear-wheels. First, by their diameters at the pitch circle or pitch diameter and the number of teeth they contain; second, by the number of teeth in the wheel and the pitch of the teeth; and third, by a system known as diametral pitch.

The first is objectionable because it involves a calculation to find the pitch of the teeth; furthermore, if this calculation be

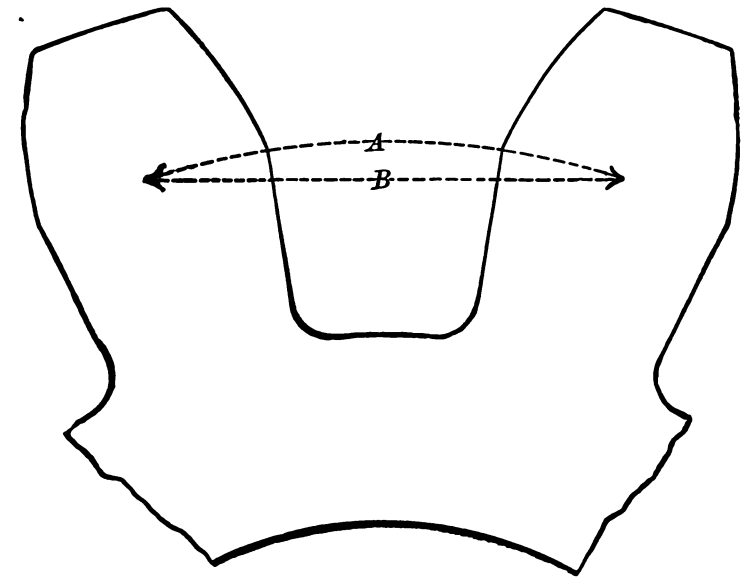

Fig. 10.

made by dividing the circumference of the pitch circle by the number of teeth in the wheel, the result gives the arc pitch, which cannot be measured correctly by a lineal measuring rule, especially if the wheel be a small one having but few teeth, or of coarse pitch, as, in that case, the arc pitch very sensibly differs from the chord pitch, and a second calculation may become necessary to find the chord pitch from the arc pitch.

The second method (the number and pitch of the teeth) possesses the disadvantage that it is necessary to state whether the pitch is the arc or the chord pitch.

If the arc pitch is given it is difficult to measure as before, while if the chord pitch is given it possesses the disadvantage that the diameters of the wheels will not be exactly proportional to the numbers of teeth in the respective wheels. For instance, a wheel with 20 teeth of 2 inch chord pitch is not exactly half the diameter of one of 40 teeth and 2 inch chord pitch.

To find the chord pitch of a wheel take 180 (= half the degrees in a circle) and divide it by the number of teeth in the wheel. In a table of natural sines find the sine for the number so found, which multiply by 2, and then by the radius of the wheel in inches.

Example.—What is the chord pitch of a wheel having 12 teeth and a diameter (at pitch circle) of 8 inches? Here $180 \div 12 = 15$;

(sine of 15 is ·25881). Then ·25881 × 2 = ·51762 × 4 (= radius of wheel) = 2·07048 inches = chord pitch.

TABLE OF NATURAL SINES.

Degrees.	Sine.	Degrees.	Sine.	Degrees.	Sine.
1	·01745	16	·27563	31	·51503
2	·03489	17	·29237	32	·52991
3	·05233	18	·30901	33	·54463
4	·06975	19	·32556	34	·55919
5	·08715	20	·34202	35	·57357
6	·10452	21	·35836	36	·58778
7	·12186	22	·37460	37	·60181
8	·13917	23	·39073	38	·61566
9	·15643	24	·40673	39	·62932
10	·17364	25	·42261	40	·64278
11	·19080	26	·43837	41	·65605
12	·20791	27	·45399	42	·66913
13	·22495	28	·46947	43	·68199
14	·24192	29	·48480	44	·69465
15	·25881	30	·50000	45	·70710

The principle upon which diametral pitch is based is as follows:—

The diameter of the wheel at the pitch circle is supposed to be divided into as many equal parts or divisions as there are teeth in the wheel, and the length of one of these parts is the diametral pitch. The relationship which the diametral bears to the arc pitch is the same as the diameter to the circumference, hence a diametral pitch which measures 1 inch will accord with an arc pitch of 3·1416; and it becomes evident that, for all arc pitches of less than 3·1416 inches, the corresponding diametral pitch must be expressed in fractions of an inch, as $\frac{1}{2}$, $\frac{1}{3}$, $\frac{1}{4}$ and so on, increasing the denominator until the fraction becomes so small that an arc with which it accords is too fine to be of practical service. The numerators of these fractions being 1, in each case, they are in practice discarded, the denominators only being used, so that, instead of saying diametral pitches of $\frac{1}{2}$, $\frac{1}{3}$, or $\frac{1}{4}$, we say diametral pitches of 2, 3, or 4, meaning that there are 2, 3, or 4 teeth on the wheel for every inch in the diameter of the pitch circle.

Suppose now we are given a diametral pitch of 2. To obtain the corresponding arc pitch we divide 3·1416 (the relation of the circumference to the diameter) by 2 (the diametral pitch), and 3·1416 ÷ 2 = 1·57 = the arc pitch in inches and decimal parts of an inch. The reason of this is plain, because, an arc pitch of 3·1416 inches being represented by a diametral pitch of 1, a diametral pitch of $\frac{1}{2}$ (or 2 as it is called) will be one half of 3·1416. The advantage of discarding the numerator is, then, that we avoid the use of fractions and are readily enabled to find any arc pitch from a given diametral pitch.

Examples.—Given a 5 diametral pitch; what is the arc pitch? First (using the full fraction $\frac{1}{5}$) we have $\frac{1}{5}$ × 3·1416 = ·628 = the arc pitch. Second (discarding the numerator), we have 3·1416 ÷ 5 = ·628 = arc pitch. If we are given an arc pitch to find a corresponding diametral pitch we again simply divide 3·1416 by the given arc pitch.

Example.—What is the diametral pitch of a wheel whose arc pitch is $1\frac{1}{2}$ inches? Here 3·1416 ÷ 1·5 = 2·09 = diametral pitch. The reason of this is also plain, for since the arc pitch is to the diametral pitch as the circumference is to the diameter we have: as 3·1416 is to 1, so is 1·5 to the required diametral pitch; then 3·1416 × 1 ÷ 1·5 = 2·09 = the required diametral pitch.

To find the number of teeth contained in a wheel when the diameter and diametral pitch is given, multiply the diameter in inches by the diametral pitch. The product is the answer. Thus, how many teeth in a wheel 36 inches diameter and of 3 diametral pitch? Here 36 × 3 = 108 = the number of teeth sought. Or, per contra, a wheel of 36 inches diameter has 108 teeth. What is the diametral pitch? 108 ÷ 36 = 3 = the diametral pitch. Thus it will be seen that, for determining the relative sizes of wheels, this system is excellent from its simplicity. It also possesses the advantage that, by adding two parts of the diametral pitch to the pitch diameter, the outside diameter of the wheel or the diameter of the addendum is obtained. For instance, a wheel containing 30 teeth of 10 pitch would be 3 inches diameter on the pitch circle and $3\frac{2}{10}$ outside or total diameter.

Again, a wheel having 40 teeth of 8 diametral pitch would have a pitch circle diameter of 5 inches, because 40 ÷ 8 = 5, and its full diameter would be $5\frac{1}{4}$ inches, because the diametral pitch is $\frac{1}{8}$, and this multiplied by 2 gives $\frac{1}{4}$, which added to the pitch circle diameter of 5 inches makes $5\frac{1}{4}$ inches, which is therefore the diameter of the addendum, or, in other words, the full diameter of the wheel.

Suppose now that a pair of wheels require to have pitch circles of 5 and 8 inches diameter respectively, and that the arc pitch requires to be, say, as near as may be $\frac{4}{10}$ inch; to find a suitable pitch and the number of teeth by the diametral pitch system we proceed as follows:

In the following table are given various arc pitches, and the corresponding diametral pitch.

Diametral Pitch.	Arc Pitch.	Arc Pitch.	Diametral Pitch.
		Inch.	
2	1·57	1·75	1·79
2·25	1·39	1·5	2·09
2·5	1·25	1·4375	2·18
2·75	1·14	1·375	2·28
3	1·04	1·3125	2·39
3·5	·890	1·25	2·51
4	·785	1·1875	2·65
5	·628	1·125	2·79
6	·523	1·0625	2·96
7	·448	1·0000	3·14
8	·392	0·9375	3·35
9	·350	0·875	3·59
10	·314	0·8125	3·86
11	·280	0·75	4·19
12	·261	0·6875	4·57
14	·224	0·625	5·03
16	·196	0·5625	5·58
18	·174	0·5	6·28
20	·157	0·4375	7·18
22	·143	0·375	8·38
24	·130	0·3125	10·00
26	·120	0·25	12·56

From this table we find that the nearest diametral pitch that will correspond to an arc pitch of $\frac{4}{10}$ inch is a diametral pitch of 8, which equals an arc pitch of ·392, hence we multiply the pitch circles (5 and 8,) by 8, and obtain 40 and 64 as the number of teeth, the arc pitch being ·392 of an inch. To find the number of teeth and pitch by the arc pitch and circumference of the pitch circle, we should require to find the circumference of the pitch circle, and divide this by the nearest arc pitch that would divide the circumference without leaving a remainder, which would entail more calculating than by the diametral pitch system.

The designation of pitch by the diametral pitch system is, however, not applied in practice to coarse pitches, nor to gears in which the teeth are cast upon the wheels, pattern makers generally preferring to make the pitch to some measurement that accords with the divisions of the ordinary measuring rule.

Of two gear-wheels that which impels the other is termed the driver, and that which receives motion from the other is termed the driven wheel or follower; hence in a single pair of wheels in gear together, one is the driver and the other the driven wheel or follower. But if there are three wheels in gear together, the middle one will be the follower when spoken of with reference to the first or prime mover, and the driver, when mentioned with reference to the third wheel, which will be a follower. A series of more than two wheels in gear together is termed a train of wheels or of gearing. When the wheels in a train are in gear continuously, so that each wheel, save the first and last, both receives and imparts motion, it is a simple train, the first wheel being the driver, and the last the follower, the others being termed intermediate wheels. Each of these intermediates is a follower with reference to the wheel that drives it, and a driver to the one that it drives. But the velocity of all the wheels in the train is the same in fact per second (or in a given space of time), although the revolutions in

that space of time may vary; hence a simple train of wheels transmits motion without influencing its velocity. To alter the velocity (which is always taken at a point on the pitch circle) the gearing must be compounded, as in Fig. 11, in which A, B, C, E are four wheels in gear, B and C being compounded, that is, so held together on the shaft D that both make an equal number of revolutions in a given time. Hence the velocity of C will be less than that of B in proportion as the diameter, circumference, radius, or number of teeth in C, varies from the diameter, radius, circumference, or number of teeth (all the wheels being supposed to have teeth of the same pitch) in B, although the rotations of B and C are equal. It is most convenient, and therefore usual, to take the number of teeth, but if the teeth on C (and therefore those on E also) were of different pitch from those on B, the radius or diameters of the wheels must be taken instead of the pitch, when the velocities of the various wheels are to be computed. It is obvious that the compounded pair of wheels will diminish the velocity when the driver of the compounded pair (as C in the figure) is of less radius than the follower B, and conversely that the velocity will be increased when the driver is of greater radius than the follower of the compound pair.

The diameter of the addendum or outer circle of a wheel has no influence upon the velocity of the wheel. Suppose, for example, that we have a pair of wheels of 3 inch arc or circular

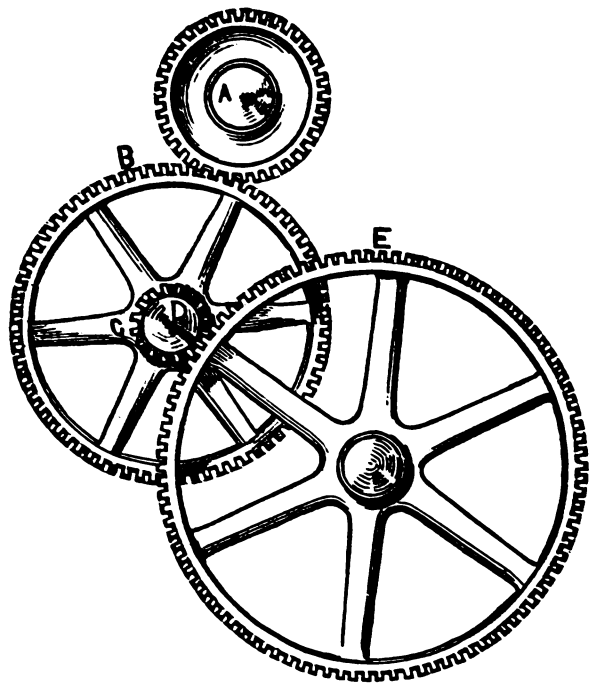

Fig. 11

pitch, and containing 20 teeth, the driver of the two making one revolution per minute. Suppose the driven wheel to have fast upon its shaft a pulley whose diameter is one foot, and that a weight is suspended from a line or cord wound around this pulley, then (not taking the thickness of the line into account) each rotation of the driven wheel would raise the weight 3·1416 feet (that being the circumference of the pulley). Now suppose that the addendum circle of either of the wheels were cut off down to the pitch circle, and that they were again set in motion, then each rotation of the driven wheel would still raise the weight 3·1416 feet as before.

It is obvious, however, that the addendum circle must be sufficiently larger than the pitch circle to enable at least one pair of teeth to be in continuous contact; that is to say, it is obvious that contact between any two teeth must not cease before contact between the next two has taken place, for otherwise the motion would not be conveyed continuously. The diameter of the pitch circle cannot be obtained from that of the addendum circle unless the pitch of the teeth and the proportion of the pitch allowed for the addendum be known. But if these be known the diameter of the pitch circle may be obtained by subtracting from that of the addendum circle twice the amount allowed for the addendum of the tooth.

Example.—A wheel has 19 teeth of 3 inch arc pitch; the addendum of the tooth or teeth equals $\frac{3}{10}$ of the pitch, and its addendum circle measures 19·943 inches; what is the diameter of the pitch circle? Here the addendum on each side of the wheel equals ($\frac{3}{10}$ of 3 inches) = ·9 inches, hence the ·9 must be multiplied by 2 for the two sides of the wheel, thus, ·9 × 2 = 1·8. Then, diameter of addendum circle 19·943 inches less 1·8 inches = 18·143 inches, which is the diameter of the pitch circle.

Proof.—Number of teeth = 19, arc pitch 3, hence 19 × 3 = 57 inches, which, divided by 3·1416 (the proportion of the circumference to the diameter) = 18·143 inches.

If the distance between the centres of a pair of wheels that are in gear be divided into two parts whose lengths are in the same proportion one to the other as are the numbers of teeth in the wheels, then these two parts will represent the radius of the pitch circles of the respective wheels. Thus, suppose one wheel to contain 100 and the other 50 teeth, and that the distance between their centres is 18 inches, then the pitch radius or pitch diameter of one will be twice that of the other, because one contains twice as many teeth as the other. In this case the radius of pitch circle for the large wheel will be 12 inches, and that for the small one 6 inches, because 12 added to 6 makes 18, which is the distance between the wheel centres, and 12 is in the same proportion to 6 that 100 is to 50.

A simple rule whereby to find the radius of the pitch circles of a pair of wheels is as follows:—

Rule.—Divide number of teeth in the large wheel by the number in the small one, and to the sum so obtained add 1. Take this amount and divide it into the distance between the centres of the wheels, and the result will be the radius of the smallest wheel. To obtain the radius of the largest wheel subtract the radius of the smallest wheel from the distance between the wheel centres.

Example.—Of a pair of wheels, one has 100 and the other 50 teeth, the distance between their centres is 18 inches; what is the pitch radius of each wheel?

Here 100 ÷ 50 = 2, and 2 + 1 = 3. Then 18 ÷ 3 = 6, hence the pitch radius of the small wheel is 6 inches. Then 18 − 6 = 12 = pitch radius of large wheel.

Example 2.—Of a pair of wheels one has 40 and the other 90 teeth. The distance between the wheel centres is 32½ inches; what are the radii of the respective pitch circles? 90 ÷ 40 = 2·25 and 2·25 + 1 = 3·25. Then 32·5 ÷ 3·25 = 10 = pitch radius of small wheel, and 32·5 − 10 = 22·5, which is the pitch radius of the large wheel.

To prove this we may show that the pitch radii of the two wheels are in the same proportion as their numbers of teeth, thus:—

$$\text{Proof.—Radius of small wheel} = \frac{10}{22{\cdot}5} \times 4 = \frac{40}{90{\cdot}0}$$
$$\text{radius of large wheel} = \frac{}{} \times 4 =$$

Suppose now that a pair of wheels are constructed, having respectively 50 and 100 teeth, and that the radii of their true pitch circles are 12 and 6 respectively, but that from wear in their journals or journal bearings this 18 inches (12 + 6 = 18) between centres (or line of centres, as it is termed) has become 18⅜ inches. Then the acting effective or operative radii of the pitch circles will bear the same proportion to the 18⅜ as the numbers of teeth in the respective wheels, and will be 12·25 for the large, and 6·125 for the small wheel, instead of 12 and 6, as would be the case were the wheels 18 inches apart. Working this out under the rule given we have 100 ÷ 50 = 2, and 2 + 1 = 3. Then 18·375 ÷ 3 = 6·125 = pitch radius of small wheel, and 18·375 − 6·125 = 12·25 = pitch radius of the large wheel.

The true pitch line of a tooth is the line or point where the face curve joins the flank curve, and it is essential to the transmission of uniform motion that the pitch circles of epicycloidal wheels exactly coincide on the line of centres, but if they do not coincide (as by not meeting or by overlapping each other), then a false pitch circle becomes operative instead of the true one, and the motion of the driven wheel will be unequal at different instants of time, although the revolutions of the wheels will of course be in proportion to the respective numbers of their teeth.

If the pitch circle is not marked on a single wheel and its arc pitch is not known, it is practically a difficult matter to obtain either the arc pitch or diameter of the pitch circle. If the wheel

is a new one, and its teeth are of the proper curves, the pitch circle will be shown by the junction of the curves forming the faces with those forming the flanks of the teeth, because that is the location of the pitch circle ; but in worn wheels, where from play or looseness between the journals and their bearings, this point of junction becomes rounded, it cannot be defined with certainty.

In wheels of large diameter the arc pitch so nearly coincides with the chord pitch, that if the pitch circle is not marked on the wheel and the arc pitch is not known, the chord pitch is in practice often assumed to represent the arc pitch, and the diameter of the wheel is obtained by multiplying the number of teeth by the chord pitch. This induces no error in wheels of coarse pitches, because those pitches advance by $\frac{1}{4}$ or $\frac{1}{2}$ inch at a step, and a pitch measuring about, say, $1\frac{1}{4}$ inch chord pitch, would be known to be $1\frac{1}{4}$ arc pitch, because the difference between the arc and chord pitch would be too minute to cause sensible error. Thus the next coarsest pitch to 1 inch would be $1\frac{1}{8}$, or more often $1\frac{1}{4}$ inch, and the difference between the arc and chord pitch of the smallest wheel would not amount to anything near $\frac{1}{8}$ inch, hence there would be no liability to mistake a pitch of $1\frac{1}{8}$ for 1 inch or *vice versâ*. The diameter of wheel that will be large enough to transmit continuous motion is diminished in proportion as the pitch is decreased; in proportion, also, as the wheel diameter is reduced, the difference between the arc and chord pitch increases, and further the steps by which fine pitches advance are more minute (as $\frac{1}{4}$, $\frac{9}{32}$, $\frac{5}{16}$ &c.). From these facts there is much more liability to err in estimating the arc from the measured chord pitch in fine pitches, hence the employment of diametral pitch for small wheels of fine pitches is on this account also very advantageous. In marking out a wheel the chord pitch will be correct if the pitch circle be of correct diameter and be divided off into as many points of equal division (with compasses) as there are to be teeth in the wheel. We may then mark from these points others giving the thickness of the teeth, which will make the spaces also correct. But when the wheel teeth are to be cut in a machine out of solid metal, the mechanism of the machine enables the marking out to be dispensed with, and all that is necessary is to turn the wheel to the required addendum diameter, and mark the pitch circle. The following are rules for the purposes they indicate.

The circumference of a circle is obtained by multiplying its diameter by 3·1416, and the diameter may be obtained by dividing the circumference by 3·1416.

The circumference of the pitch circle divided by the arc pitch gives the number of teeth in the wheel.

The arc pitch multiplied by the number of teeth in the wheel gives the circumference of the pitch circle.

Gear-wheels are simply rotating levers transmitting the power they receive, less the amount of friction necessary to rotate them under the given conditions. All that is accomplished by a simple train of gearing is, as has been said, to vary the number of revolutions, the speed or velocity measured in feet moved through per minute remaining the same for every wheel in the train. But in a compound train of gears the speed in feet per minute, as well as the revolutions, may be varied by means of the compounded pairs of wheels. In either a simple or a compound train of gearing the power remains the same in amount for every wheel in the train, because what is in a compound train lost in velocity is gained in force, or what is gained in velocity is lost in force, the word force being used to convey the idea of strain, pressure, or pull.

In Fig. 12, let A, B, and C represent the pitch circles of three gears of which A and B are in gear, while C is compounded with B; let E be the shaft of A, and G that for B and C. Let A be 60 inches, B=30 inches, and C=40 inches in diameter. Now suppose that shaft E suspends from its perimeter a weight of 50 lbs., the shaft being 4 inches in diameter. Then this weight will be at a leverage of 2 inches from the centre of E and the 50 must be multiplied by 2,=100 lbs. at one inch from centre of E. At the perimeter of A this 100 will become one-thirtieth of one hundred, because from the centre to the perimeter of A is 30. One-thirtieth of 100 is $3\frac{33}{100}$ lbs., which will be the force exerted by A on the perimeter of B. From the perimeter of B to its centre (that is, its radius) is 15 inches, hence the $3\frac{33}{100}$ lbs. at its perimeter will become fifteen times as much at one inch from the centre G of B, and $3\frac{33}{100} \times 15 = 49\frac{95}{100}$ lbs. From the centre G to the perimeter of C being 20 inches, the $49\frac{95}{100}$ lbs. will be only one-twentieth of that amount at the perimeter of C, hence $49\frac{95}{100} \div 20 = 2\frac{49}{100}$ lbs., which is the amount of force at the perimeter of C.

Here we have treated the wheels as simple levers, dividing the weight by the length of the levers in all cases where it is transmitted from the shaft to the perimeter, and multiplying it by the length of the lever when it is transmitted from the perimeter of the wheel to the centre of the shaft. The precise same result will be reached if we take the diameter of the wheels or the number of the teeth, providing the pitch of the teeth on all the wheels is alike.

Suppose, for example, that A has 60 teeth, B has 30 teeth, and C has 40 teeth, all being of the same pitch. Suppose the 50 lb. weight be suspended as before, and that the circumference of the shaft be equal to that of a pinion having 4 teeth of the same pitch as the wheels. Then the 50 multiplied by the 4 becomes 200, which divided by 60 (the number of teeth on A) becomes $3\frac{33}{100}$, which multiplied by 30 (the number of teeth on B) becomes $99\frac{99}{100}$,

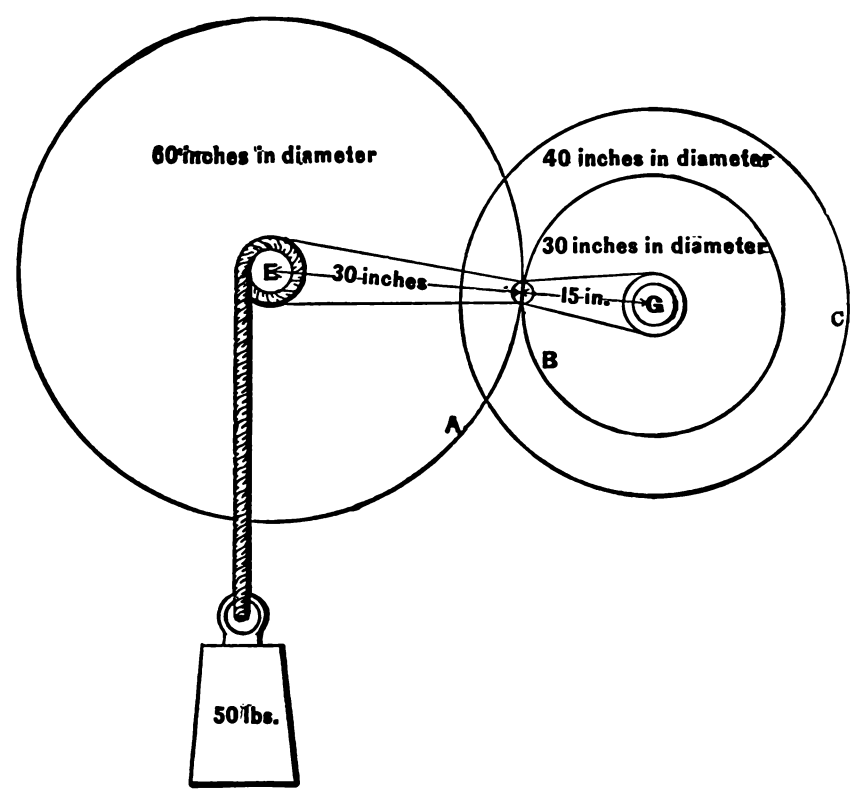

Fig. 12.

which divided by 40 (the number of teeth on C) becomes $2\frac{49}{100}$ lbs. as before.

It may now be explained why the shaft was taken as equal to a pinion having 4 teeth. Its diameter was taken as 4 inches and the wheel diameter was taken as being 60 inches, and it was supposed to contain 60 teeth, hence there was 1 tooth to each inch of diameter, and the 4 inches diameter of shaft was therefore equal to a pinion having 4 teeth. From this we may perceive the philosophy of the rule that to obtain the revolutions of wheels we multiply the given revolutions by the teeth in the driving wheels and divide by the teeth in the driven wheels.

Suppose that A (Fig. 13) makes 1 revolution per minute, how many will C make, A having 60 teeth, B 30 teeth, and C 40 teeth? In this case we have but one drivingwheel A, and one driven wheel B, the driver having 60 teeth, the driven 30, hence 60 ÷ 30 = 2, equals revolutions of B and also of C, the two latter being on the same shaft.

It will be observed then that the revolutions are in the same proportion as the numbers of the teeth or the radii of the wheels, or what is the same thing, in the same proportion as their diameters. The number of teeth, however, is usually taken as being easier obtained than the diameter of the pitch circles, and easier to calculate, because the teeth will be represented by a whole number, whereas the diameter, radius, or circumference, will generally contain fractions.

Suppose that the 4 wheels in Fig. 14 have the respective numbers of teeth marked beside them, and that the upper one having 40 teeth makes 60 revolutions per minute, then we may obtain the revolutions of the others as follows :—

Revolutions.		Teeth in first driver.		Teeth in first driven.		Teeth in second driver.		Teeth in second driven.		
60	×	40	÷	60	×	20	÷	120	=	$6\frac{66}{100}$

and a remainder of the reciprocating decimals. We may now prove this by reversing the question, thus. Suppose the 120 wheel to make $6\frac{66}{100}$ revolutions per minute, how many will the 40 wheel make ?

Revolutions.		Teeth in first driver.		Teeth in first driven.		Teeth in second driver.		Teeth in second driven.		
6·66	×	120	÷	20	×	60	÷	40	=	$59\frac{99}{100}$ =

revolutions of the 40 wheel, the discrepancy of $\frac{1}{100}$ being due to the 6·66 leaving a remainder and not therefore being absolutely correct.

That the amount of power transmitted by gearing, whether compounded or not, is equal throughout every wheel in the train, may be shown as follows :—

Referring again to Fig. 10, it has been shown that with a 50 lb.

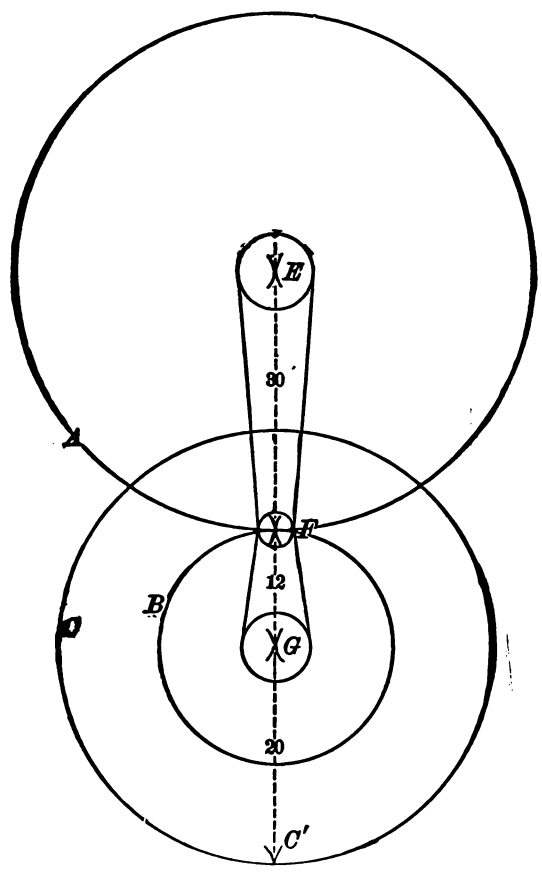

Fig. 13.

weight suspended from a 4 inch shaft E, there would be $30\frac{33}{100}$ lbs. at the perimeter of A. Now suppose a rotation be made, then the 50 lb. weight would fall a distance equal to the circumference of the shaft, which is (3.1416 × 4 = $12\frac{56}{100}$) $12\frac{56}{100}$ inches. Now the circumference of the wheel is (60 dia. × 3·1416 = $188\frac{49}{100}$ cir.) $188\frac{49}{100}$ inches, which is the distance through which the $3\frac{33}{100}$ lbs. would move during one rotation of A. Now 3·33 lbs. moving through 188·49 inches represents the same amount of power as does 50 lbs. moving through a distance of 12·56 inches, as may be found by converting the two into inch lbs. (that is to say, into the number of inches moved by 1 lb.), bearing in mind that there will be a slight discrepancy due to the fact that the fractions ·33 in the one case, and ·56 in the other are not quite correct. Thus :

188·49 inches × 3·33 lbs. = 627·67 inch lbs., and
12·56 ,, × 50 ,, = 628 ,, ,,

Taking the next wheels in Fig. 12, it has been shown that the 3·33 lbs. delivered from A to the perimeter of B, becomes 2·49 lbs. at the perimeter of C, and it has also been shown that C makes two revolutions to one of A, and its diameter being 40 inches, the distance this 2·49 lbs. will move through in one revolution of A will therefore be equal to twice its circumference, which is (40 dia. × 3·1416 = 125·666 cir., and 125·666 × 2 = 251·332) 251·332 inches. Now 2·49 lbs. moving through 251·332 gives when brought to inch lbs. 627.67 inch lbs., thus 251·332 × 2·49 = 627·67. Hence the amount of power remains constant, but is altered in form, merely being converted from a heavy weight moving a short distance, into a lighter one moving a distance exactly as much greater as the weight or force is lessened or lighter.

Gear-wheels therefore form a convenient method of either simply transmitting motion or power, as when the wheels are

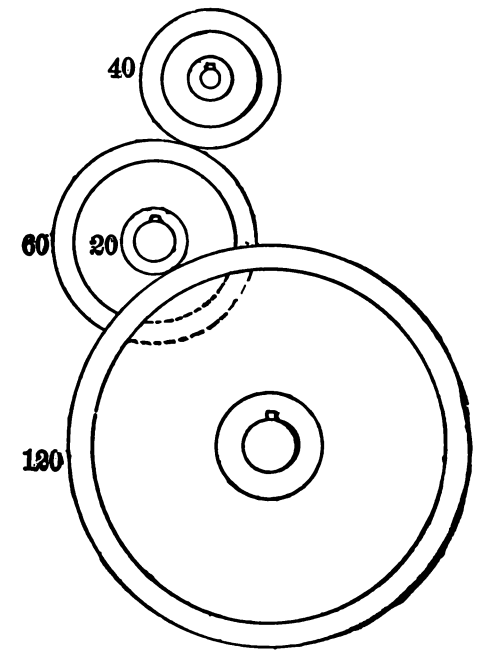

Fig. 14.

all of equal diameter, or of transmitting it and simultaneously varying its velocity of motion, as when the wheels are compounded either to reduce or increase the speed or velocity in feet per second of the prime mover or first driver of the train or pair, as the case may be.

In considering the action of gear-teeth, however, it sometimes is more convenient to denote their motion by the number of degrees of angle they move through during a certain portion of a revolution, and to refer to their relative velocities in terms of the ratio or proportion existing between their velocities. The first of

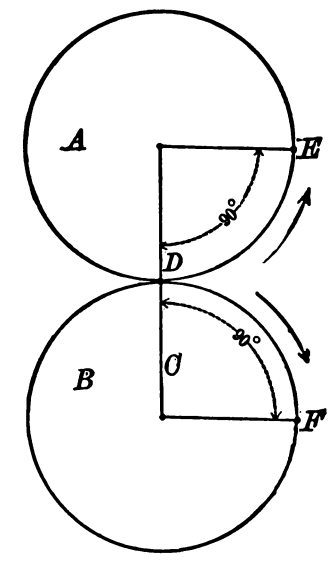

Fig. 15.

these is termed the angular velocity, or the number of degrees of angle the wheel moves through during a given period, while the second is termed the velocity ratio of the pair of wheels. Let it be supposed that two wheels of equal diameter have contact at their perimeters so that one drives the other by friction without any slip, then the velocity of a point on the perimeter of one will equal that of a point on the other. Thus in Fig. 15 let A and B represent the pitch circles of two wheels, and C an imaginary line joining the axes of the two wheels and termed the line of centres. Now the point of contact of the two wheels will be on the line of

centres as at D, and if a point or dot be marked at D and motion be imparted from A to B, then when each wheel has made a quarter revolution the dot on A will have arrived at E while that on B will have arrived at F. As each wheel has moved through one quarter revolution, it has moved through 90° of angle, because in the whole circle there is 360°, one quarter of which is 90°, hence instead of saying that the wheels have each moved through one quarter of a revolution we may say they have moved through an angle of 90°, or, in other words, their angular velocity has, during this period, been 90°. And as both wheels have moved through an equal number of degrees of angle their velocity ratio or proportion of velocity has been equal.

Obviously then the angular velocity of a wheel represents a portion of a revolution irrespective of the diameter of the wheel, while the velocity ratio represents the diameter of one in proportion to that of the other irrespective of the actual diameter of either of them.

Now suppose that in Fig. 16 A is a wheel of twice the diameter of B; that the two are free to revolve about their fixed centres, but that there is frictional contact between their perimeters at the line of centres sufficient to cause the motion of one to be imparted to the other without slip or lost motion, and that a point be marked on both wheels at the point of contact D. Now let motion be communicated to A until the mark that was made at D has moved one-eighth of a revolution and it will have moved through an eighth of a circle, or 45°. But during this motion the mark on B will have moved a quarter of a revolution, or through an angle of

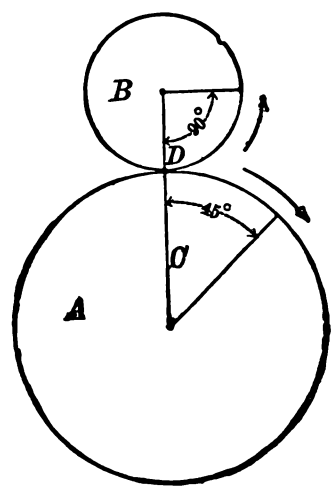

Fig. 16.

90° (which is one quarter of the 360° that there are in the whole circle). The angular velocities of the two are, therefore, in the same ratio as their diameters, or two to one, and the velocity ratio is also two to one. The angular velocity of each is therefore the number of degrees of angle that it moves through in a certain portion of a revolution, or during the period that the other wheel of the pair makes a certain portion of a revolution, while the velocity ratio is the proportion existing between the velocity of one wheel and that of the other; hence if the diameter of one only of the wheels be changed, its angular velocity will be changed and the velocity ratio of the pair will be changed. The velocity ratio may be obtained by dividing either the radius, pitch, diameter, or number of teeth of one wheel into that of the other.

Conversely, if a given velocity ratio is to be obtained, the radius, diameter, or number of teeth of the driver must bear the same relation to the radius, diameter, or number of teeth of the follower, as the velocity of the follower is desired to bear to that of the driver.

If a pair of wheels have an equal number of teeth, the same pairs of teeth will come into action at every revolution; but if of two wheels one is twice as large as the other, each tooth on the small wheel will come into action twice during each revolution of the large one, and will work during each successive revolution with the same two teeth on the large wheel; and an application of the principle of the hunting tooth is sometimes employed in clocks to prevent the overwinding of their springs, the device being shown in Fig. 17, which is from "Willis' Principles of Mechanism."

For this purpose the winding arbor C has a pinion A of 19 teeth fixed to it close to the front plate. A pinion B of 18 teeth is mounted on a stud so as to be in gear with the former. A radial plate C D is fixed to the face of the upper wheel A, and a similar plate F E to the lower wheel B. These plates terminate outward in semicircular noses D, E, so proportioned as to cause their extremities to abut against each other, as shown in the figure, when the motion given to the upper arbor by the winding has brought them into the position of contact. The clock being now wound up, the winding arbor and wheel A will begin to turn in the opposite direction. When its first complete rotation is effected the wheel B will have gained one tooth distance from the line of centres, so as to place the stop D in advance of E and thus avoid a contact with E, which would stop the motion. As each turn of the upper wheel increases the distance of the stops, it follows from the principle of the hunting cog, that after eighteen revolutions of A and nineteen of B the stops will come together again and the clock be prevented from running down too far. The winding key being applied, the upper wheel A will be rotated in the opposite direction, and the winding repeated as above.

Thus the teeth on one wheel will wear to imbed one upon the other. On the other hand the teeth of the two wheels may be of such numbers that those on one wheel will not fall into gear with the same teeth on the other except at intervals, and thus an inequality on any one tooth is subjected to correction by all the teeth in the other wheel. When a tooth is added to the

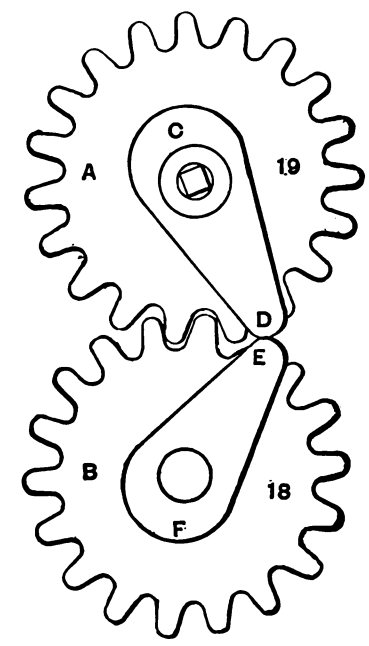

Fig. 17.

number of teeth on a wheel to effect this purpose it is termed a hunting cog, or hunting tooth, because if one wheel have a tooth less, then any two teeth which meet in the first revolution are distant, one tooth in the second, two teeth in the third, three in the fourth, and so on. The odd tooth is on this account termed a hunting tooth.

It is obvious then that the shape or form to be given to the teeth must, to obtain correct results, be such that the motion of the driver will be communicated to the follower with the velocity due to the relative diameters of the wheels at the pitch circles, and since the teeth move in the arc of a circle it is also obvious that the sides of the teeth, which are the only parts that come into contact, must be of same curve. The nature of this curve must be such that the teeth shall possess the strength necessary to transmit the required amount of power, shall possess ample wearing surface, shall be as easily produced as possible for all the varying conditions, shall give as many teeth in constant contact as possible, and shall, as far as possible, exert a pressure in a direction to rotate the wheels without inducing under wear upon the journals of the shafts upon which the wheels rotate. In cases, however, in which some of these requirements must be partly sacrificed to increase the value of the others, or of some of the others, to suit the special circumstances under which the wheels are to operate, the selection is left to the judgment of the designer, and the considerations which should influence his determinations will appear hereafter.

Modern practice has accepted the curve known in general terms as the cycloid, as that best filling all the requirements of wheel teeth, and this curve is employed to produce two distinct forms of teeth, epicycloidal and involute. In epicycloidal teeth the curve forming the face of the tooth is designated an epicycloid, and that forming the flank an hypocycloid. An epicycloid may be traced or generated, as it is termed, by a point in the circumference of a circle that rolls without slip upon the circumference of another circle. Thus, in Fig. 18, A and B represent two wooden wheels, A having a pencil at P, to serve as a tracing or marking point. Now, if the wheels are laid upon a sheet of

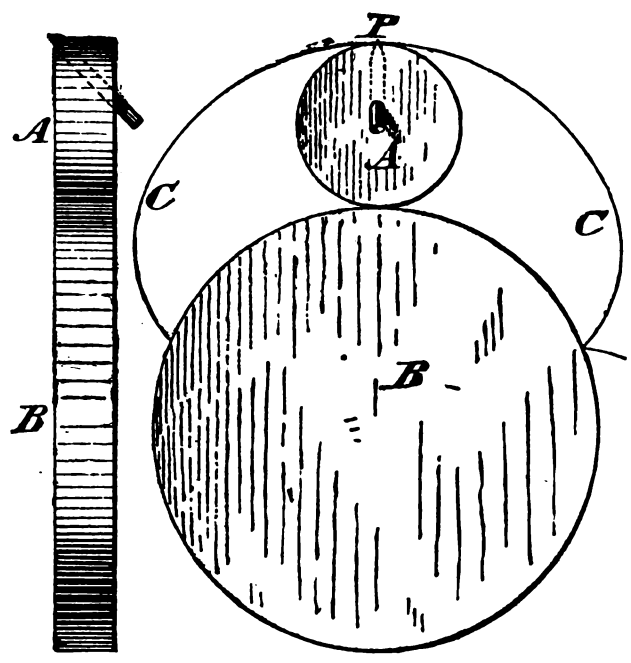

Fig. 18.

paper and while holding B in a fixed position, roll A in contact with B and let the tracing point touch the paper, the point P will trace the curve C C. Suppose now the diameter of the base circle B to be infinitely large, a portion of its circumference may be represented by a straight line, and the curve traced by a point on the circumference of the generating circle as it rolls along the base line B is termed a cycloid. Thus, in Fig. 19, B is the base line, A the rolling wheel or generating circle, and C C the cycloidal curve traced or marked by the point D when A is rolled along B. If now we suppose the base line B to represent the pitch line of a rack, it will be obvious that part of the cycloid at

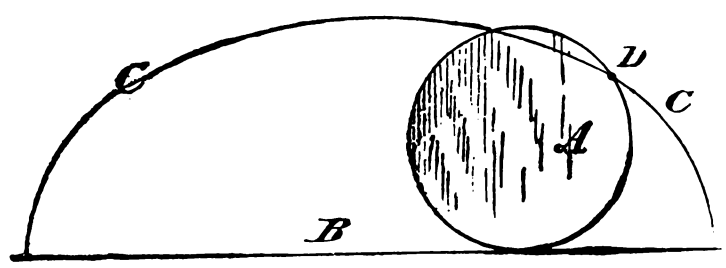

Fig. 19.

one end is suitable for the face on one side of the tooth, and a part at the other end is suitable for the face of the other side of the tooth.

A hypocycloid is a curve traced or generated by a point on the circumference of a circle rolling within and in contact (without slip) with another circle. Thus, in Fig. 20, A represents a wheel in contact with the internal circumference of B, and a point on its circumference will trace the two curves, C C, both curves starting from the same point, the upper having been traced by rolling the generating circle or wheel A in one direction and the lower curve by rolling it in the opposite direction.

To demonstrate that by the epicycloidal and hypocycloidal curves, forming the faces and flanks of what are known as epicycloidal teeth, motion may be communicated from one wheel to another with as much uniformity as by frictional contact of their circumferential surfaces, let A, B, in Fig. 21, represent two plain wheel disks at liberty to revolve about their fixed centres, and let C C represent a margin of stiff white paper attached to the face of B so as to revolve with it. Now suppose that A and B are in close contact at their perimeters at the point G, and that there is no slip, and that rotary motion commenced when the point E (where as tracing point a pencil is attached), in conjunction with the point F, formed the point of contact of the two wheels, and

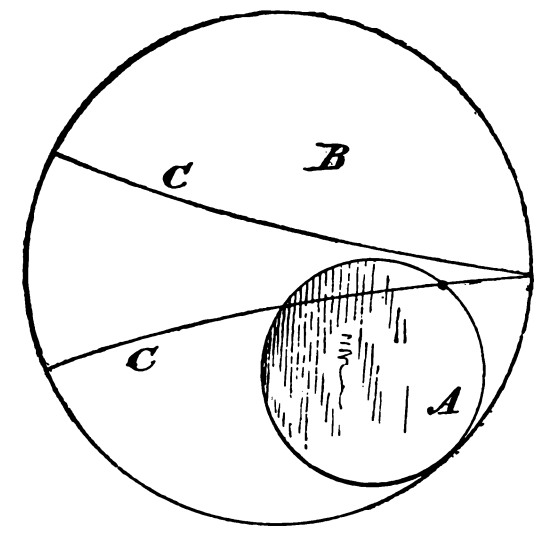

Fig. 20.

continued until the points E and F had arrived at their respective positions as shown in the figure; the pencil at E will have traced upon the margin of white paper the portion of an epicycloid denoted by the curve E F; and as the movement of the two wheels A, B, took place by reason of the contact of their circumferences, it is evident that the length of the arc E G must be equal to that

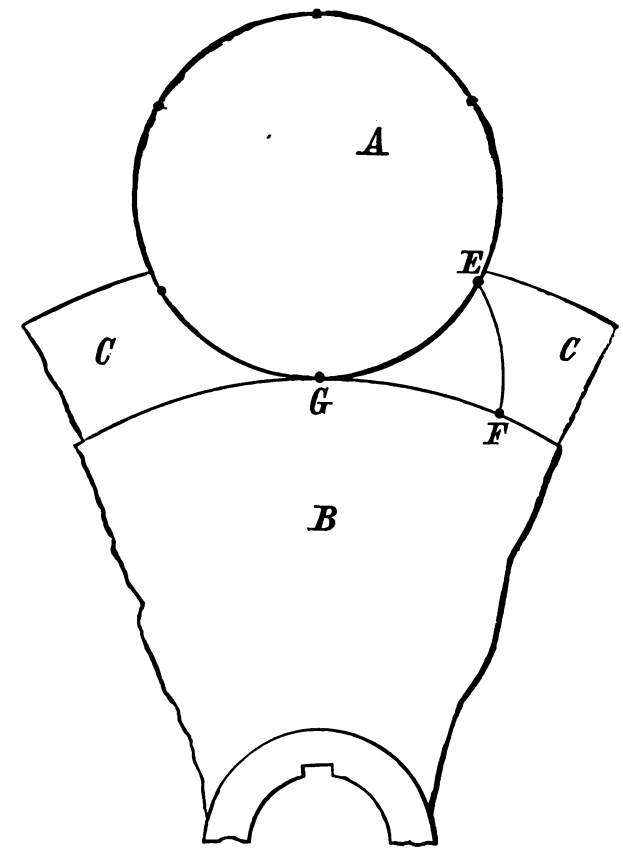

Fig. 21.

of the arc G F, and that the motion of A (supposing it to be the driver) would be communicated uniformly to B.

Now suppose that the wheels had been rotated in the opposite direction and the same form of curve would be produced, but it would run in the opposite direction, and these two curves may be utilized to form teeth, as in Fig. 22, the points on the wheel A working against the curved sides of the teeth on B.

To render such a pair of wheels useful in practice, all that is necessary is to diminish the teeth on B without altering the

nature of the curves, and increase the diameter of the points on A, making them into rungs or pins, thus forming the wheels into what is termed a wheel and lantern, which are illustrated in Fig. 23.

A represents the pinion (or lantern), and B the wheel, and C, C, the primitive teeth reduced in thickness to receive the pins on

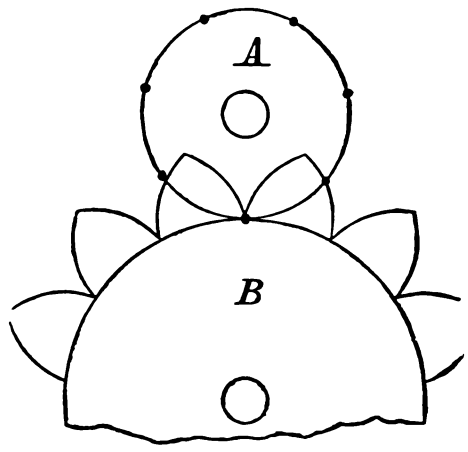

Fig. 22.

A. This reduction we may make by setting a pair of compasses to the radius of the rung and describing half-circles at the bottom of the spaces in B. We may then set a pair of compasses to the curve of C, and mark off the faces of the teeth of B to meet the

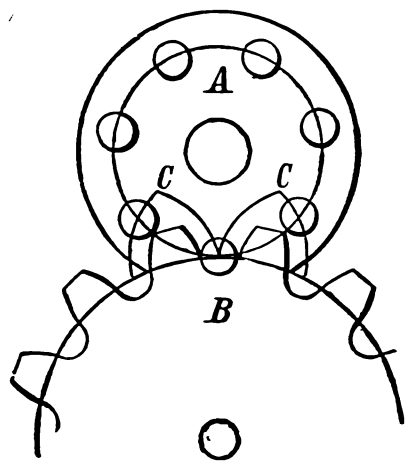

Fig. 23.

half-circles at the pitch line, and reduce the teeth heights so as to leave the points of the proper thickness; having in this operation maintained the same epicycloidal curves, but brought them closer together and made them shorter. It is obvious, however,

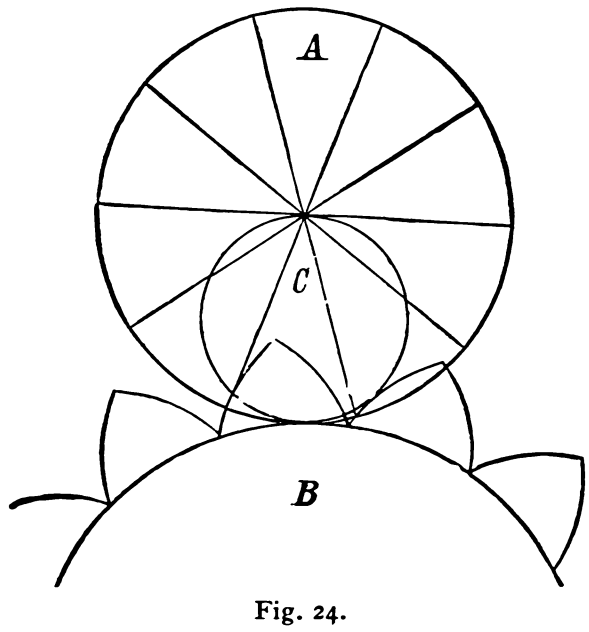

Fig. 24.

that such a method of communicating rotary motion is unsuited to the transmission of much power; because of the weakness of, and small amount of wearing surface on, the points or rungs in A.

In place of points or rungs we may have radial lines, these lines, representing the surfaces of ribs, set equidistant on the radial face of the pinion, as in Fig. 24. To determine the epicycloidal curves for the faces of teeth to work with these radial lines, we may take a generating circle C, of half the diameter of A, and cause it to roll in contact with the internal circumference of A, and a tracing point fixed in the circumference of C will

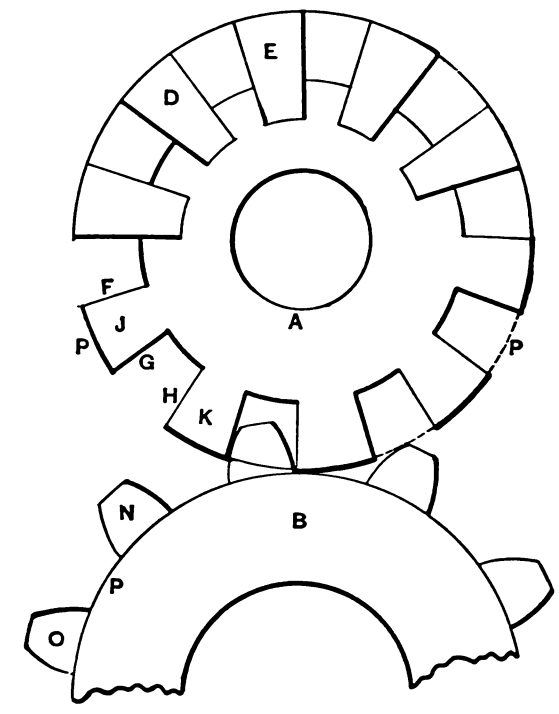

Fig. 25.

draw the radial lines shown upon A. The circumstances will not be altered if we suppose the three circles, A, B, C, to be movable about their fixed centres, and let their centres be in a straight line; and if, under these circumstances, we suppose rotation to be imparted to the three circles, through frictional contact of their perimeters, a tracing point on the circumference of C would trace the epicycloids shown upon B and the radial lines shown upon A, evidencing the capability of one to impart uniform rotary motion to the other.

To render the radial lines capable of use we must let them be the surfaces of lugs or projections on the face of the wheel, as shown in Fig. 25 at D, E, &c., or the faces of notches cut in the wheel as at F, G, H, &c., the metal between F and G forming a tooth J, having flanks only. The wheel B has the curves of each

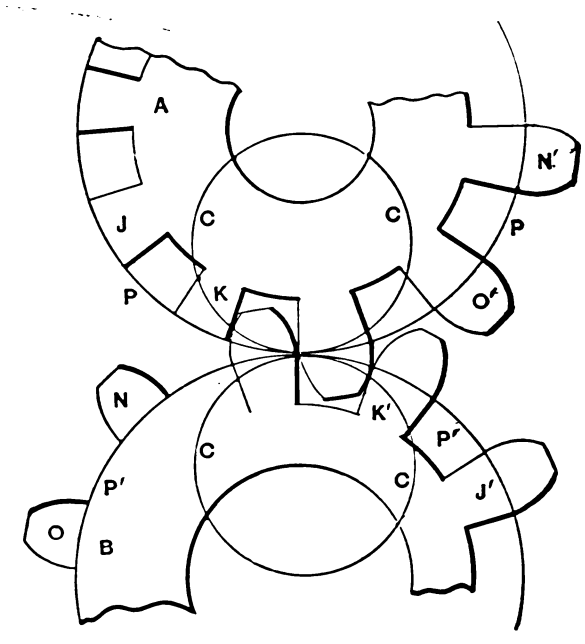

Fig. 26.

tooth brought closer together to give room for the reception of the teeth upon A. We have here a pair of gears that possess sufficient strength and are capable of working correctly in either direction.

But the form of tooth on one wheel is conformed simply to suit those on the other, hence, neither two of the wheels A, nor would two of B, work correctly together.

They may be qualified to do so, however, by simply adding to

the tops of the teeth on A, teeth of the form of those on B, and adding to those on B, and within the pitch circle, teeth corresponding to those on A, as in Fig. 26, where at K′ and J′ teeth are provided on B corresponding to J and K on A, while on A there are added teeth O′, N′, corresponding to O, N, on B, with the result that two wheels such as A or two such as B would work correctly together, either being the driver or either the follower, and rotation may occur in either direction. In this operation we have simply added faces to the teeth on A, and flanks to those on B, the curves being generated or obtained by rolling the generating, or curve marking, circle C upon the pitch circles P and P′. Thus, for the flanks of the teeth of A, C is rolled upon, and within the pitch circle P of A; while for the face curves of the same teeth C is rolled upon, but without or outside of P. Similarly for the teeth of wheel B the generating circle C is rolled within P′ for the flanks and without for the faces. With the curves rolled or produced with the same diameter of generating circle the wheels will work correctly together, no matter what their relative diameter may be, as will be shown hereafter.

to wheel Q a pencil whose point is at *n*. If then rotation be given to *a a* in the direction of the arrow *s*, all three wheels will rotate in that direction as denoted by their respective arrows *s*.

Assume, then, that rotation of the three has occurred until the pencil point at *n* has arrived at the point *m*, and during this period of rotation the point *n* will recede from the line of centres A B, and will also recede from the arcs or lines of the two pitch circles *a a*, *b b*. The pencil point being capable of marking its path, it will be found on reaching *m* to have marked inside the pitch circle *b b* the curve denoted by the full line *m x*, and simultaneously with this curve it has marked another curve outside of *a a*, as denoted by the dotted line *y m*. These two curves being marked by the pencil point at the same time and extending from *y* to *m*, and *x* also to *m*. They are prolonged respectively to *p* and to K for clearness of illustration only.

The rotation of the three wheels being continued, when the pencil point has arrived at O it will have continued the same curves as shown at O *f*, and O *g*, curve O *f* being the same as

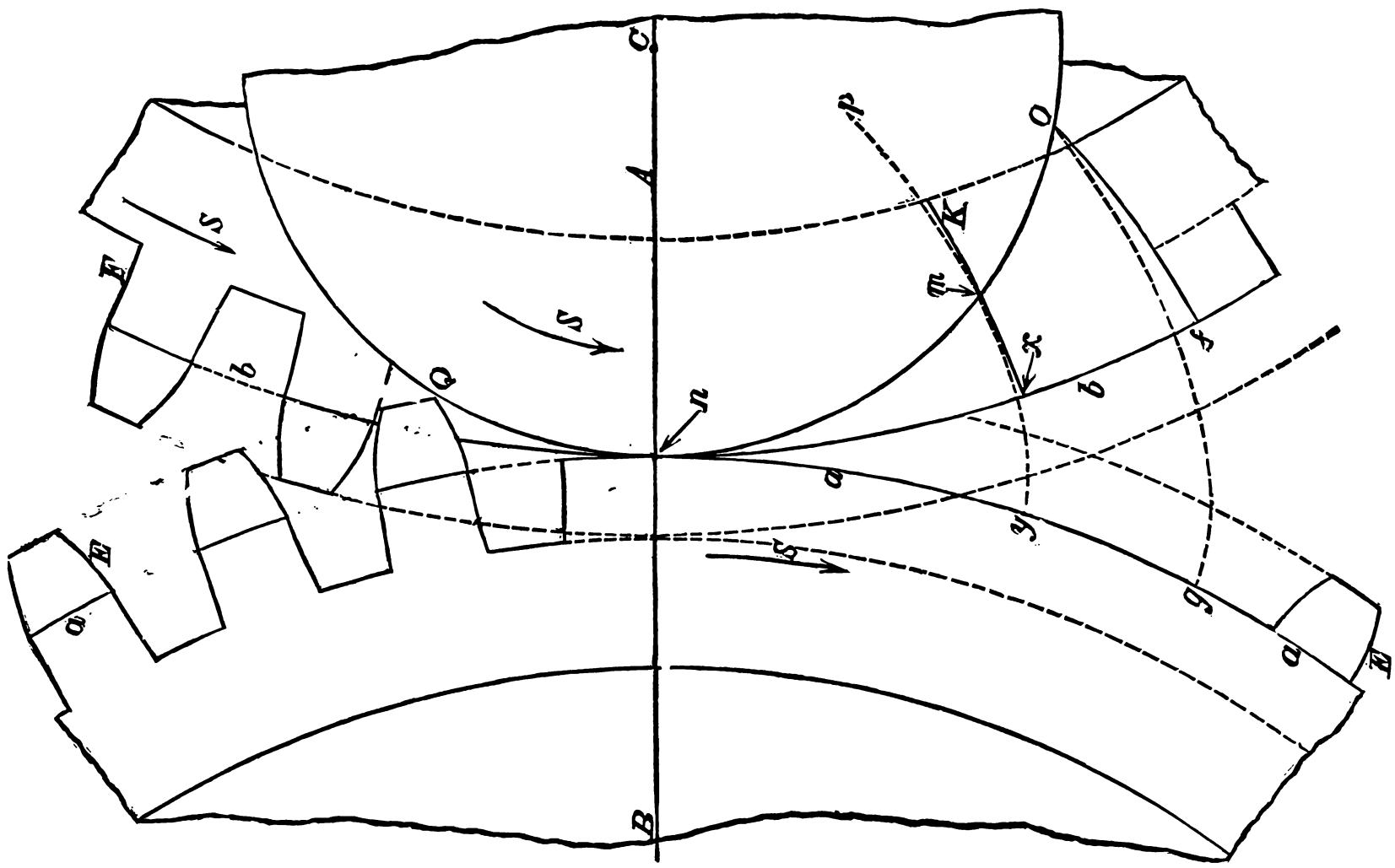

Fig. 27.

In this demonstration, however, the curves for the faces of the teeth being produced by an operation distinct from that employed to produce the flank curves, it is not clearly seen that the curves for the flanks of one wheel are the proper curves to insure a uniform velocity to the other. This, however, may be made clear as follows :—

In Fig. 27 let *a a* and *b b* represent the pitch circles of two wheels of equal diameters, and therefore having the same number of teeth. On the left, the wheels are shown with the teeth in, while on the right-hand side of the line of centres A B, the wheels are shown blank; *a a* is the pitch line of one wheel, and *b b* that for the other. Now suppose that both wheels are capable of being rotated on their shafts, whose centres will of course be on the line A B, and suppose a third disk, Q, be also capable of rotation upon its centre, C, which is also on the line A B. Let these three wheels have sufficient contact at their perimeters at the point *n*, that if one be rotated it will rotate both the others (by friction) without any slip or lost motion, and of course all three will rotate at an equal velocity. Suppose that there is fixed *m x* placed in a new position, and O *g* being the same as *m y*, but placed in a new position. Now since both these curves (O *f* and O *g*) were marked by the one pencil point, and at the same time, it follows that at every point in its course that point must have touched both curves at once. Now the pencil point having moved around the arc of the circle Q from *n* to *m*, it is obvious that the two curves must always be in contact, or coincide with each other, at some point in the path of the pencil or describing point, or, in other words, the curves will always touch each other at some point on the curve of Q, and between *n* and O. Thus when the pencil has arrived at *m*, curve *m y* touches curve K *x* at the point *m*, while when the pencil had arrived at point O, the curves O *f* and O *g* will touch at O. Now the pitch circles *a a* and *b b*, and the describing circle Q, having had constant and uniform velocity while the traced curves had constant contact at some point in their lengths, it is evident that if instead of being mere lines, *m y* was the face of a tooth on *a a*, and *m x* was the flank of a tooth on *b b*, the same uniform motion may be transmitted from *a a*, to *b b*, by pressing the tooth face *m y* against

the tooth flank *m x*. Let it now be noted that the curve *y m* corresponds to the face of a tooth, as say the face E of a tooth on *a a*, and that curve *x m* corresponds to the flank of a tooth on *b b*, as say to the flank F, short portions only of the curves being used for those flanks. If the direction of rotation of the three wheels was reversed, the same shape of curves would be produced, but they would lie in an opposite direction, and would, therefore, be suitable for the other sides of the teeth. In this case, the contact of tooth upon tooth will be on the other side of the line of centres, as at some point between *n* and Q.

In this illustration the diameter of the rolling or describing circle Q, being less than the radius of the wheels *a a* or *b b*, the flanks of the teeth are curves, and the two wheels being of the same diameter, the teeth on the two are of the same shape. But the principles governing the proper formation of the curve remain the same whatever be the conditions. Thus in Fig. 28 are segments of a pair of wheels of equal diameter, but the describing, rolling, or curve-generating circle is equal in diameter

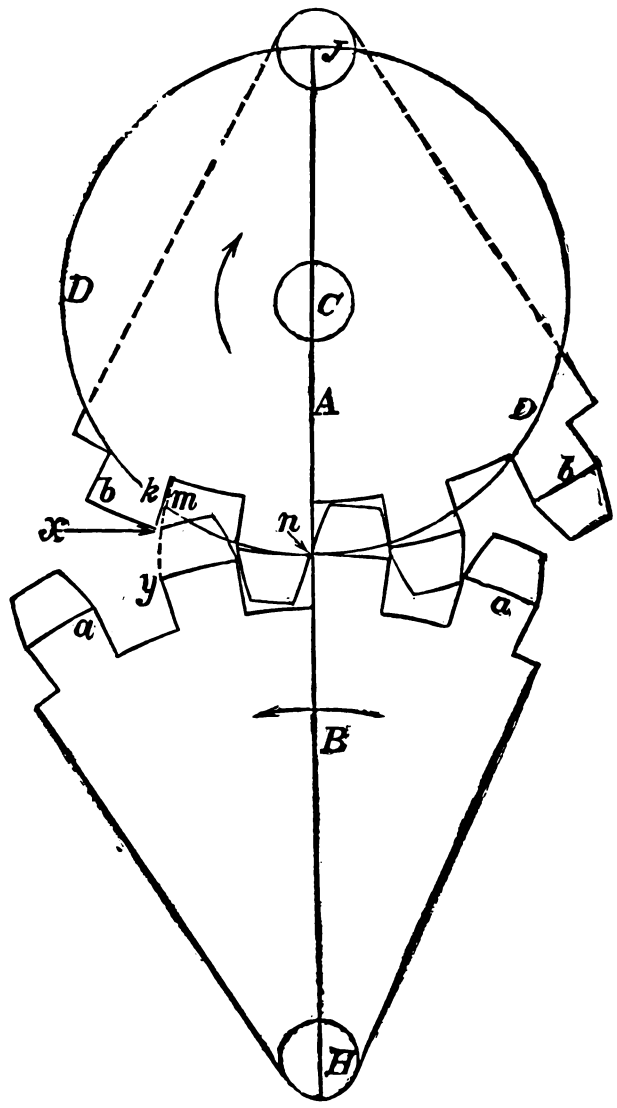

Fig. 28.

to the radius of the wheels. Motion is supposed to have occurred in the direction of the arrows, and the tracing point to have moved from *n* to *m*. During this motion it will have marked a curve *y m*, a portion of the *y* end serving for the face of a tooth on one wheel, and also the line *k x*, a continuation of which serves for the flank of a tooth on the other wheel. In Fig. 29 the pitch circles only of the wheels are marked, *a a* being twice the diameter of *b b*, and the curve-generating circle being equal in diameter to the radius of wheel *b b*. Motion is assumed to have occurred until the pencil point, starting from *n*, had arrived at *o*, marking curves suitable for the face of the teeth on one wheel and for the flanks of the other as before, and the contact of tooth upon tooth still, at every point in the path of the teeth, occurring at some point of the arc *n o*. Thus when the point had proceeded as far as point *m* it will have marked the curve *y* and the radial line *x*, and when the point had arrived at *o*, it will have prolonged *m y* into *o g* and *x* into *o f*, while in either position the point is marking both lines The velocities of the wheels remain the same notwithstanding their different diameters, for the arc *n g* must obviously (if the wheels rotate without slip by friction of their surfaces while the curves are traced) be equal in length to the arc *n f*, or the arc *n o*.

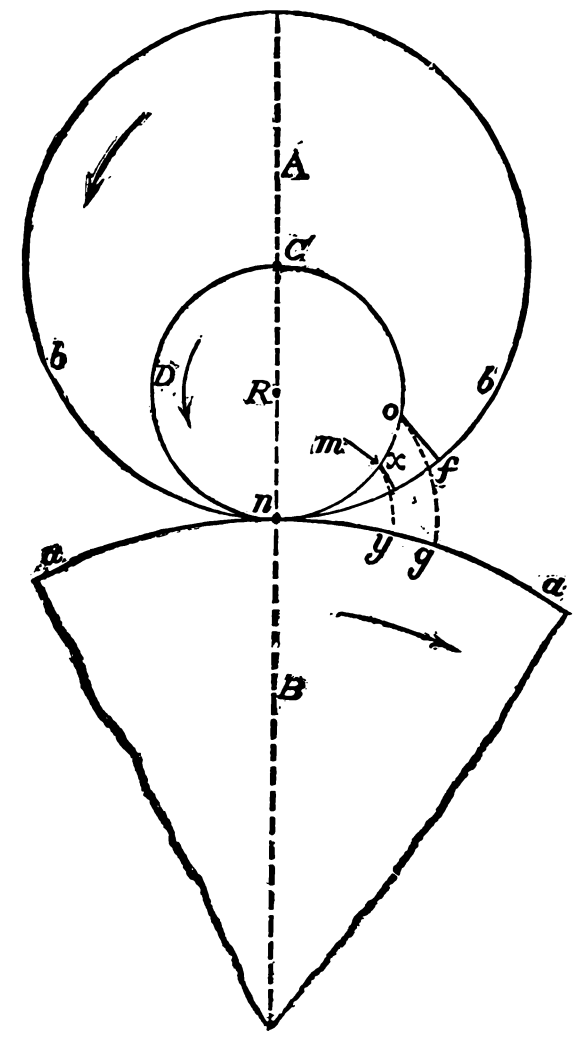

Fig. 29.

In Fig. 30 *a a* and *b b* are the pitch circles of two wheels as before, and *c c* the pitch circle of an annular or internal gear, and D is the rolling or describing circle. When the describing

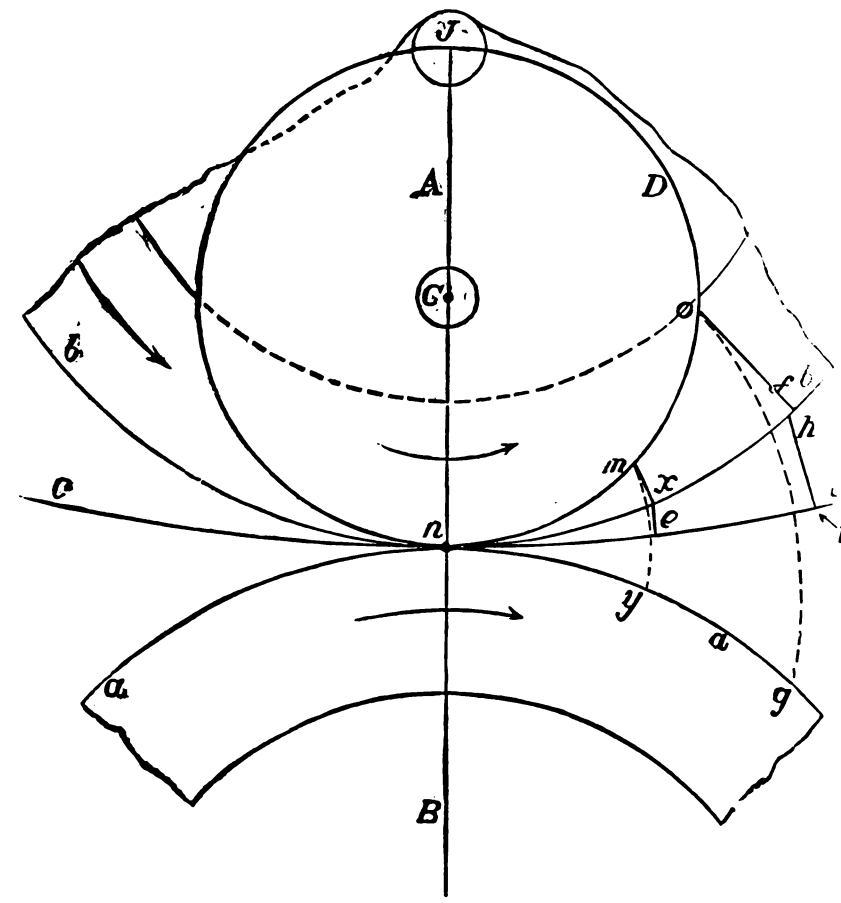

Fig. 30.

point arrived at *m*, it will have marked the curve *y* for the face of a tooth on *a a*, the curve *x* for the flank of a tooth on *b b*, and the curve *e* for the face of a tooth on the internal wheel *c c*.

Motion being continued *m y* will be prolonged to *o g*, while simultaneously *x* will be extended into *o f* and *e* into *h v*, the velocity of all the wheels being uniform and equal. Thus the arcs *n v*, *n f*, and *n g*, are of equal length.

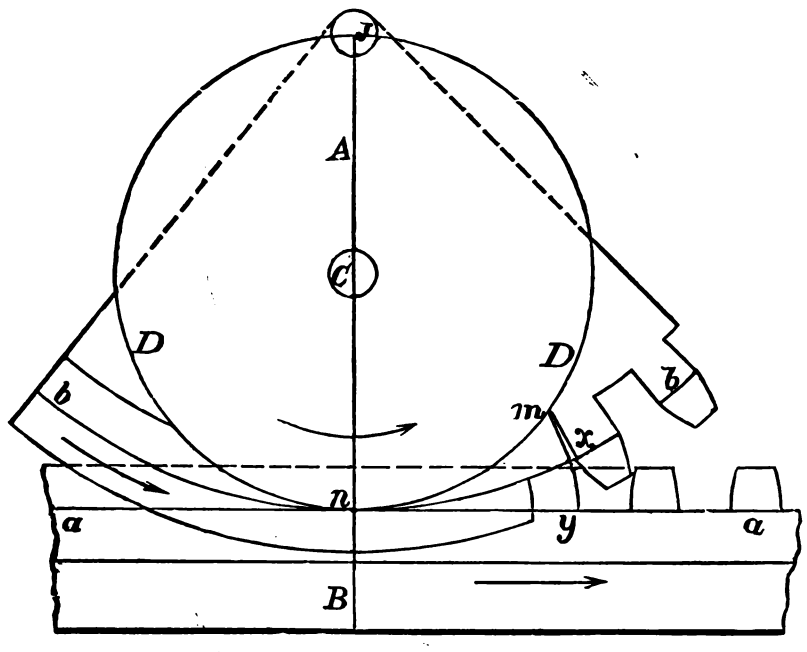

Fig. 31.

In Fig. 31 is shown the case of a rack and pinion ; *a a* is the pitch line of the rack, *b b* that of the pinion, A B at a right angle to *a a*, the line of centres, and D the generating circle. The wheel and rack are shown with teeth *n* on one side simply for clearness of illustration. The pencil point *n* will, on arriving at *m*, have traced the flank curve *x* and the curve *y* for the face of the rack teeth.

It has been supposed that the three circles rotated together by the frictional contact of their perimeters on the line of centres, but the circumstances will remain the same if the wheels remain at rest while the generating or describing circle is rolled around them. Thus in Fig. 32 are two segments of wheels as before, *c* representing the centre of a tooth on *a a*, and *d* representing the centre of a tooth on *b b*. Now suppose that a generating or rolling circle be placed with its pencil point at *e*, and that it then be rolled around *a a* until it had reached the position marked 1, then it will have marked the curve from *e* to *n*, a part of this curve serving for the face of tooth *c*. Now let the rolling circle be placed within the pitch circle *a a* and its pencil point *n* be set to *e*, then, on being rolled to position 2, it will have marked the flank of tooth *c*. For the other wheel suppose the rolling wheel or circle to have started from *f* and rolled to the line of centres as in the cut, it will have traced the curve forming the face of the tooth *d*. For the flank of *d* the rolling circle or wheel is placed within *b b*, its tracing point set at *f* on the pitch circle, and on being rolled to position 3 it will have marked the flank curve. The curves thus produced will be precisely the same as those produced by rotating all three wheels about their axes, as in our previous demonstrations.

The curves both for the faces and for the flanks thus obtained will vary in their curvature with every variation in either the diameter of the generating circle or of the base or pitch circle of the wheel. Thus it will be observable to the eye that the face curve of tooth *c* is more curved than that of *d*, and also that the flank curve of *d* is more spread at the root than is that for *c*, which has in this case resulted from the difference between the diameter of the wheels *a a* and *b b*. But the curves obtained by a given diameter of rolling circle on a given diameter of pitch circle will be correct for any pitch of teeth that can be used upon wheels having that diameter of pitch circle. Thus, suppose we have a curve obtained by rolling a wheel of 20 inches circumference on a pitch circle of 40 inches circumference—now a wheel of 40 inches in circumference may contain 20 teeth of 2 inch arc pitch, or 10 teeth of 4 inch arc pitch, or 8 teeth of 5 inch arc pitch, and the curve may be used for either of those pitches.

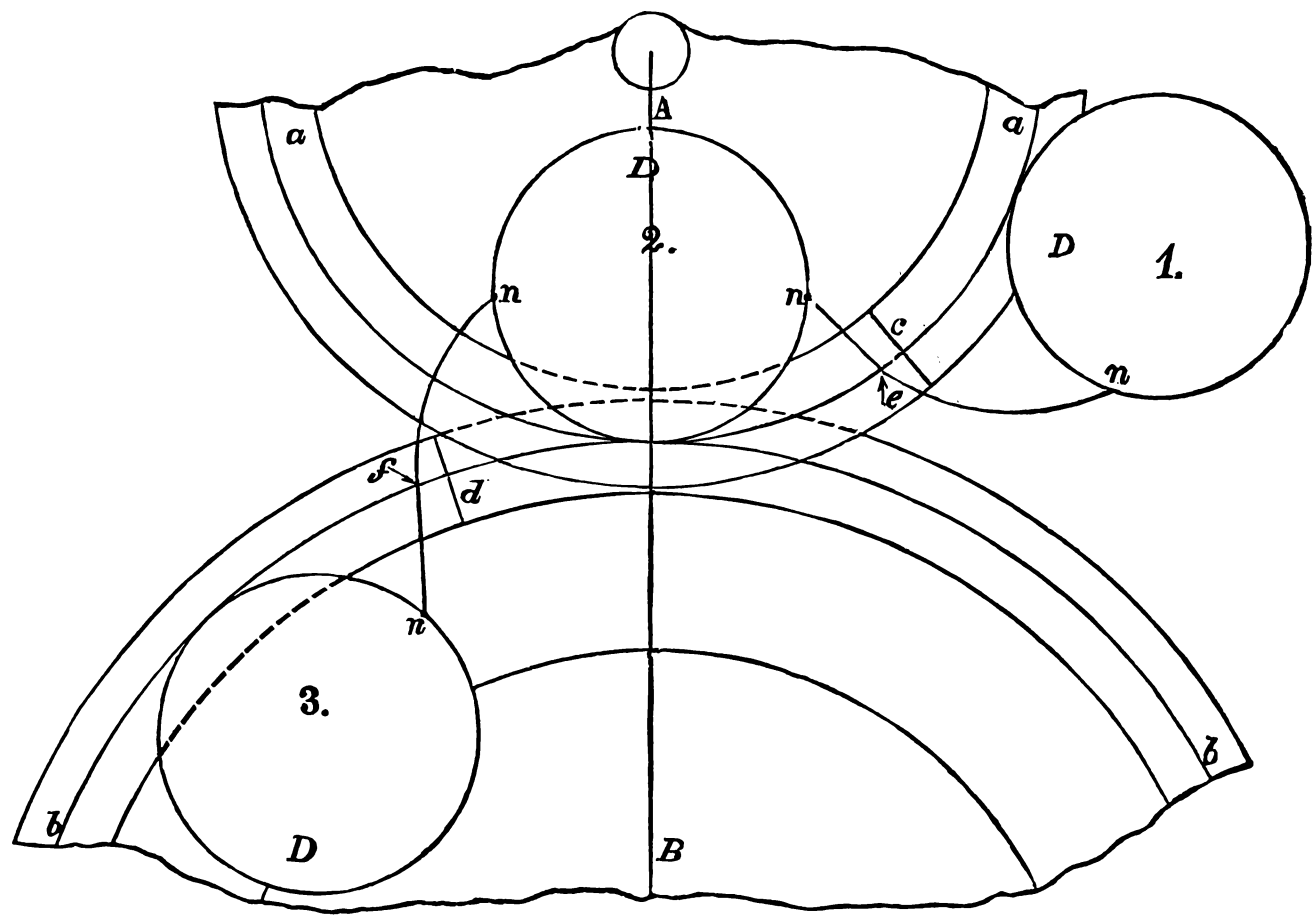

Fig. 32.

If we trace the path of contact of each tooth, from the moment it takes until it leaves contact with a tooth upon the other wheel, we shall find that contact begins at the point where the flank of the tooth on the wheel that drives or imparts motion to the other wheel, meets the face of the tooth on the driven wheel, which will always be where the point of the driven tooth cuts or meets the generating or rolling circle of the driving tooth. Thus in Fig. 33 are represented segments of two spur-wheels marked respectively the driver and the driven, their generating circles being marked at G and G′, and X X representing the line of centres. Tooth A is shown in the position in which it commences its contact with tooth

B at C. Secondly, we shall find that as these two teeth approach the line of centres X, the point of contact between them moves or takes place along the thickened arc or curve C X, or along the path of the generating circle G.

Thus we may suppose tooth D to be another position of tooth A, the contact being at F, and as motion was continued the contact would pass along the thickened curve until it arrived at the line of centres X. Now since the teeth have during this path of contact approached the line of centres, this part of the whole arc of action or of the path of contact is termed the arc of approach. After the two teeth have passed the line of centres X, the path of contact of the teeth will be along the dotted arc from X to L, and as the teeth are during this period of motion receding from X this part of the contact path is termed the arc of recess.

That contact of the teeth would not occur earlier than at C nor later than at L, is shown by the dotted teeth sides; thus A and B would not touch when in the position denoted by the dotted teeth, nor would teeth I and K if in the position denoted by their dotted lines.

If we examine further into this path of contact we find that throughout its whole path the face of the tooth of one wheel has contact with the flank only of the tooth of the other wheel, and also that the flank only of the driving-wheel tooth has contact before the tooth reaches the line of centres, while the face of only the driving tooth has contact after the tooth has passed the line of centres.

Thus the flanks of tooth A and of tooth D are in driving contact with the faces of teeth B and E, while the face of tooth H is in contact with the flank of tooth I.

These conditions will always exist, whatever be the diameters of the wheels, their number of teeth or the diameter of the generating circle. That is to say, in fully developed epicycloidal teeth, no matter which of two wheels is the driver or which the driven wheel, contact on the teeth of the driver will always be on the tooth flank during the arc of approach and on the tooth face during the arc of recess; while on the driven wheel contact during the arc of approach will be on the tooth face only, and during the arc of recess on the tooth flank only, it being borne in mind that the arcs of approach and recess are reversed in location if the direction of revolution be reversed. Thus if the direction of wheel motion was opposite to that denoted by the arrows in Fig. 33 then the arc of approach would be from M to X, and the arc of recess from X to M.

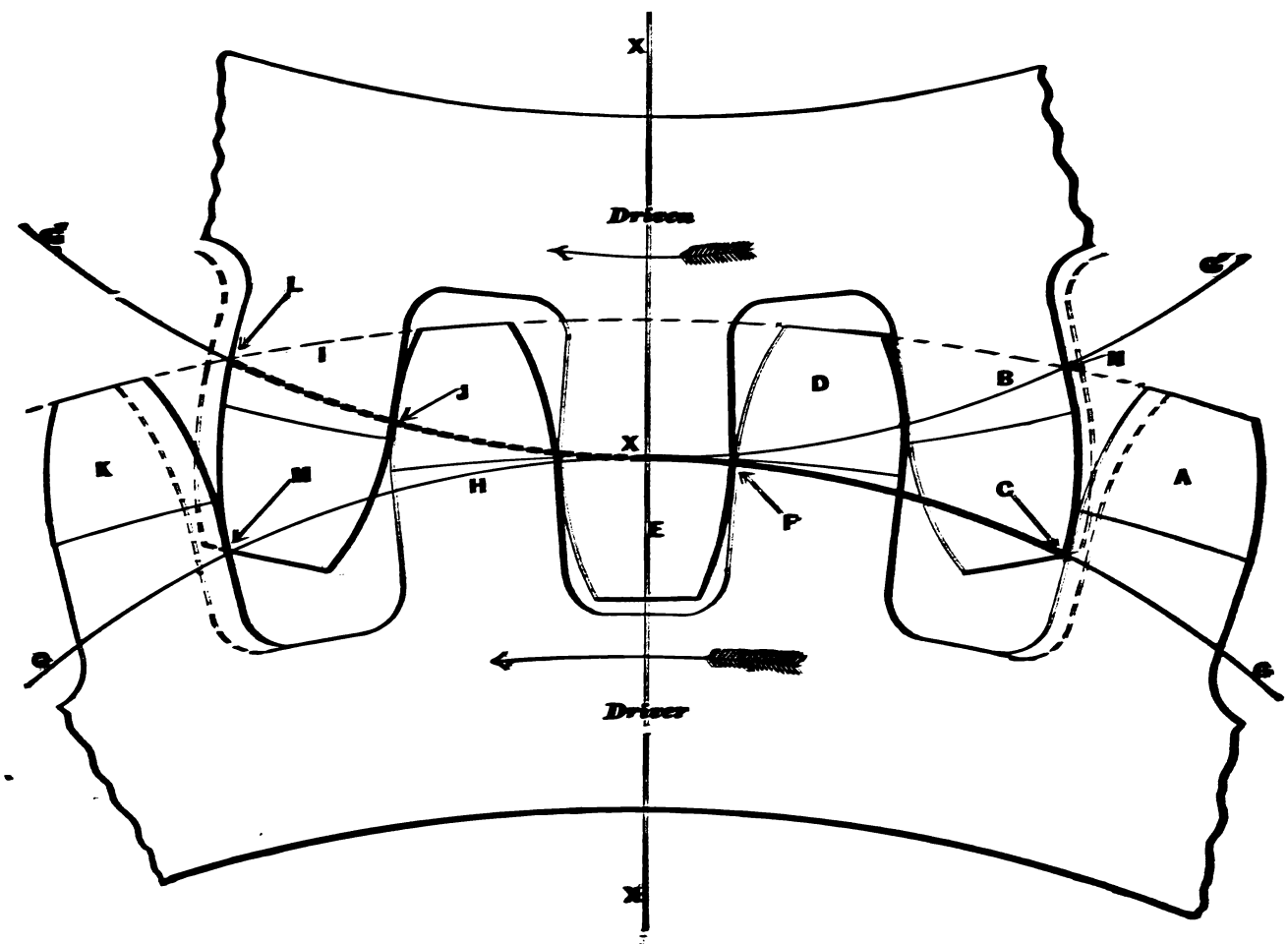

Fig. 33.

It is laid down by Professor Willis that the motion of a pair of gear-wheels is smoother in cases where the path of contact begins at the line of centres, or, in other words, when there is no arc of approach; and this action may be secured by giving to the driven wheel flanks only, as in Fig. 34, in which the driver has fully developed teeth, while the teeth on the driven have no faces.

In this case, supposing the wheels to revolve in the direction of arrow P, the contact will begin at the line of centres X, move or pass along the thickened arc and end at B, and there will be contact during the arc of recess only. Similarly, if the direction of motion be reversed as denoted by arrow Q, the driver will begin contact at X, and cease contact at H, having, as before, contact during the arc of recess only.

But if the wheel W were the driver and V the driven, then these conditions would be exactly reversed. Thus, suppose this to be the case and the direction of motion be as denoted by arrow P, the contact would occur during the arc of approach. from H to X, ceasing at X.

Or if W were the driver, and the direction of motion was as denoted by Q, then, again, the path of contact would be during the arc of approach only, beginning at B and ceasing at X, as denoted by the thickened arc B X.

The action of the teeth will in either case serve to give a theoretically perfect motion so far as uniformity of velocity is concerned, or, in other words, the motion of the driver will be transmitted with perfect uniformity to the driven wheel. It will be observed, however, that by the removal of the faces of the teeth, there are a less number of teeth in contact at each instant of time; thus, in Fig. 33 there is driving contact at three points, C, F, and J, while in Fig. 34 there is driving contact at two points only. From the fact that the faces of the teeth work with the flanks only, and that one side only of the teeth comes into action, it becomes apparent that each tooth may have curves formed by four different diameters of rolling or generating circles and yet work correctly, no matter which wheel be the driver, or which the driven wheel or follower, or in which direction motion occurs. Thus in Fig. 35, suppose wheel V to be the driver, having motion in the direction of arrow P, then faces A on the teeth of V will work with flanks B of the teeth on W, and so long as the curves for these faces and flanks are obtained with the same diameter of rolling circle, the action of the teeth will be correct, no matter

what the shapes of the other parts of the teeth. Now suppose that V still being the driver, motion occurs in the other direction as denoted by Q, then the faces C of the teeth on V will drive the flanks D of the teeth on W, and the motion will again be correct, providing that the same diameter (whatever it may be) of rolling circle be used for these faces and flanks, irrespective, of course, of what diameter of rolling circle is used for any other of the teeth curves. Now suppose that W is the driver, motion occurring in the direction of P, then faces E will drive flanks F, and the motion will be correct as before if the curves E and F are produced with the same diameter of rolling circle. Finally, let W be the driving wheel and motion occur in the direction of Q, and faces G will drive flanks H, and yet another diameter of rolling circle may be used for these faces and flanks. Here then it is shown that four different diameters of rolling circles may be used upon a pair of wheels, giving teeth-forms that will fill all the requirements so far as correctly transmitting motion is concerned. In the case of a pair of wheels having an equal number of teeth, so that each tooth on one wheel will always fall into gear with the same tooth on the other wheel, every tooth may have its individual curves differing from all the others, providing that the corresponding teeth on the other wheel are formed to match them by using the same size of rolling circle for each flank and face that work together.

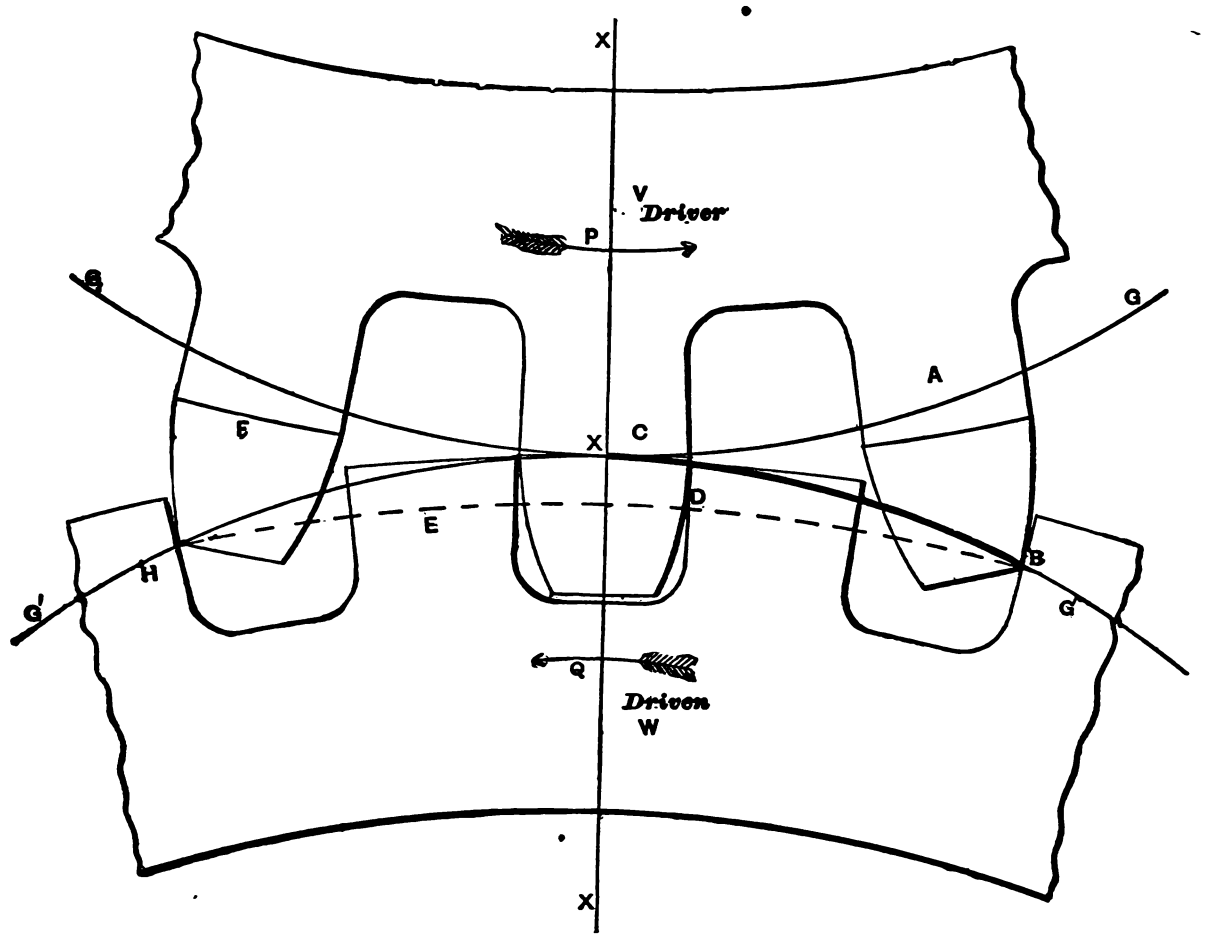

Fig. 34.

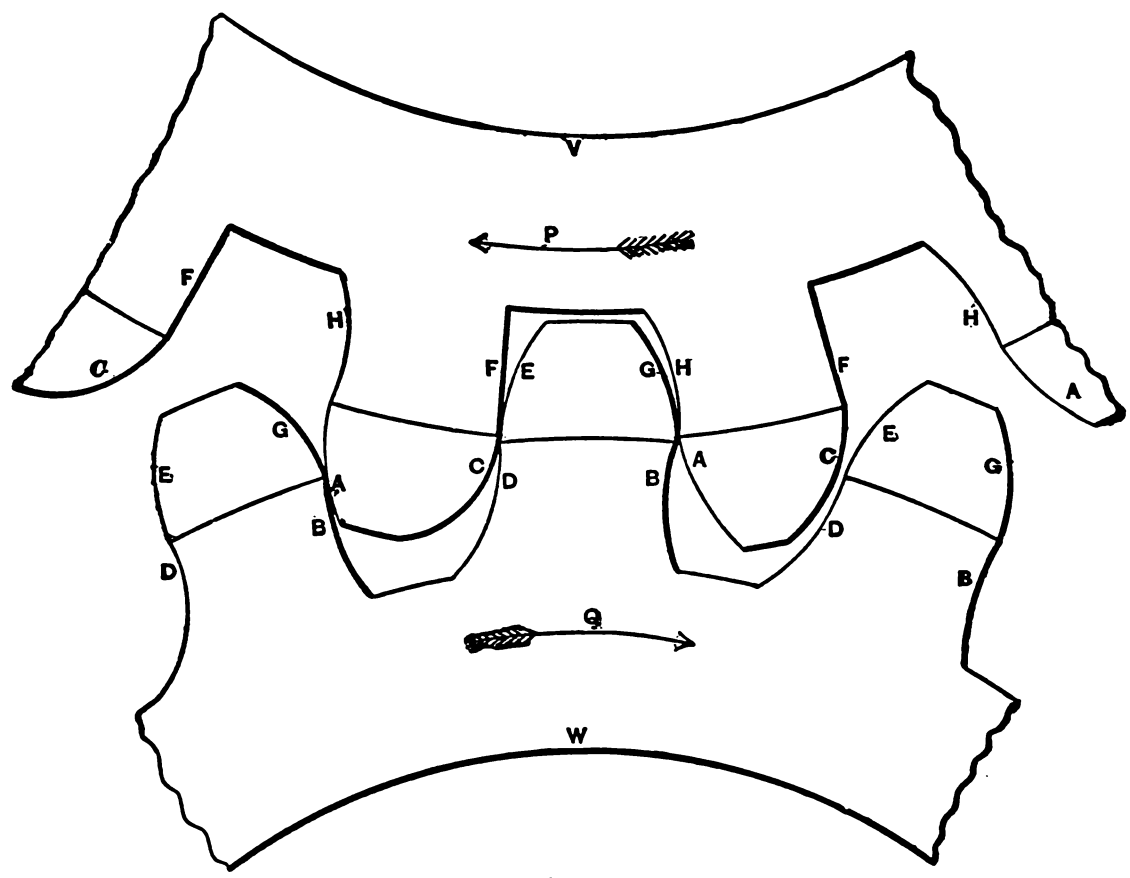

Fig. 35.

It is obvious, however, that such teeth would involve a great deal of labor in their formation and would possess no advantage, hence they are not employed. It is not unusual, however, in a pair of wheels that are to gear together and that are not intended to interchange with other wheels, to use such sizes as will give to

both wheels teeth having radial flanks; which is done by using for the face of the teeth on the largest wheel of the pair and for the flanks of the teeth of the smallest wheel, a generating circle equal in diameter to the radius of the smallest wheel, and for the faces of the teeth of the small wheel and the flanks of the teeth of

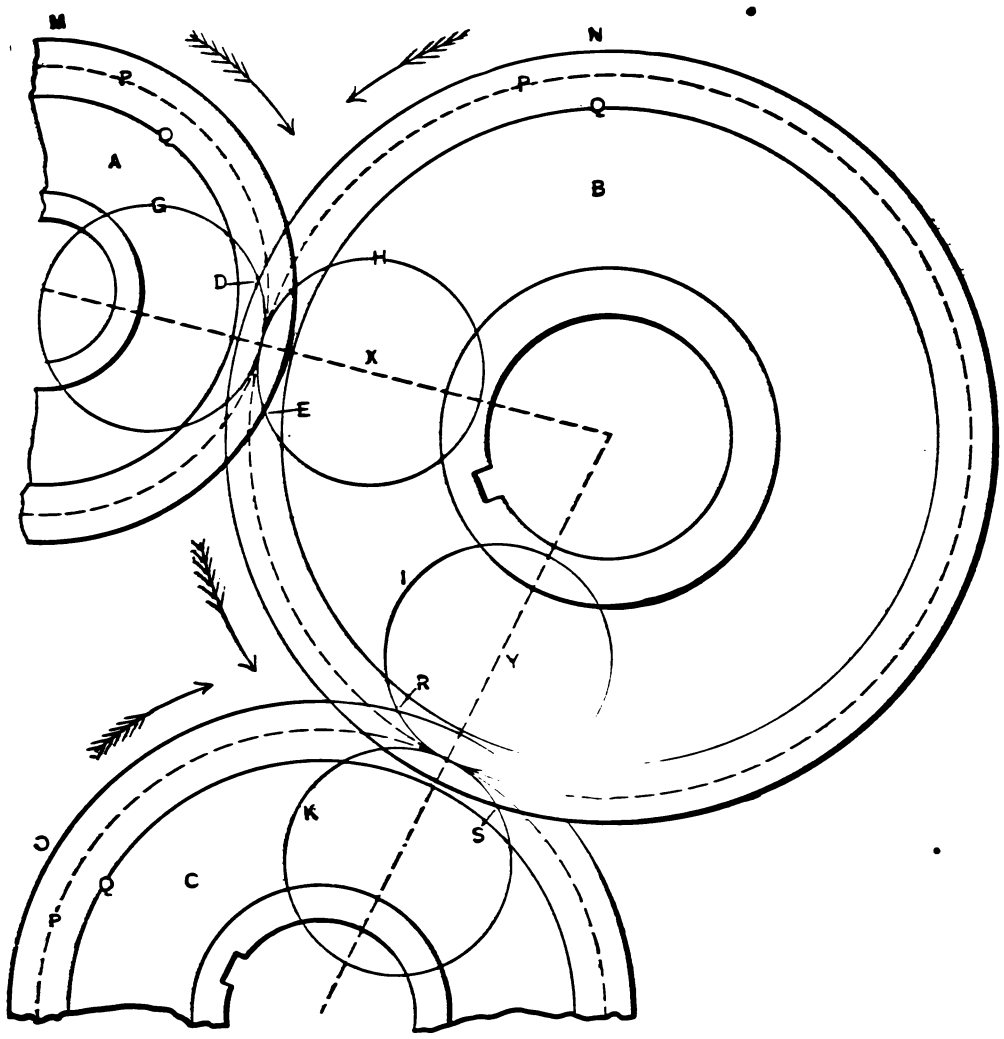

Fig. 36.

the large one, a generating circle whose diameter equals the radius of the large wheel.

It will now be evident that if we have planned a pair or a train of wheels we may find how many teeth will be in contact for any given pitch, as follows. In Fig. 36 let A, B, and C, represent three blanks for gear-wheels whose addendum circles are M, N and O; P representing the pitch circles, and Q representing the circles for the roots of the teeth. Let X and Y represent the lines of centres, and G, H, I and K the generating or rolling circle, whose centres are on the respective lines of centres—the diameter of the generating circle being equal to the radius of the pinion, as in the Willis system, then, the pinion M being the driver, and the wheels revolving in the direction denoted by the respective arrows, the arc or path of contact for the first pair will be from point D, where the generating circle G crosses circle N to E, where generating circle H crosses the circle M, this path being composed of two arcs of a circle. All that is necessary, therefore, is to set the compasses to the pitch the teeth are to have and step them along these arcs, and the number of steps will be the number of teeth that will be in contact. Similarly, for the second pair contact will begin at R and end at S, and the compasses applied as before (from R to S) along the arc of generating circle I to the line of centres, and thence along the arc of generating circle K to S, will give in the number of steps the number of teeth that will be in contact. If for any given purpose the number of teeth thus found to be in contact is insufficient, the pitch may be made finer.

When a wheel is intended to be formed to work correctly with any other wheel having the same pitch, or when there are more than two wheels in the train, it is necessary that the same size of generating circle be used for all the faces and all the flanks in the set, and if this be done the wheels will work correctly together, no matter what the number of the teeth in each wheel may be, nor in what way they are interchanged. Thus in Fig. 37, let A represent the pitch line of a rack, and B and C the pitch

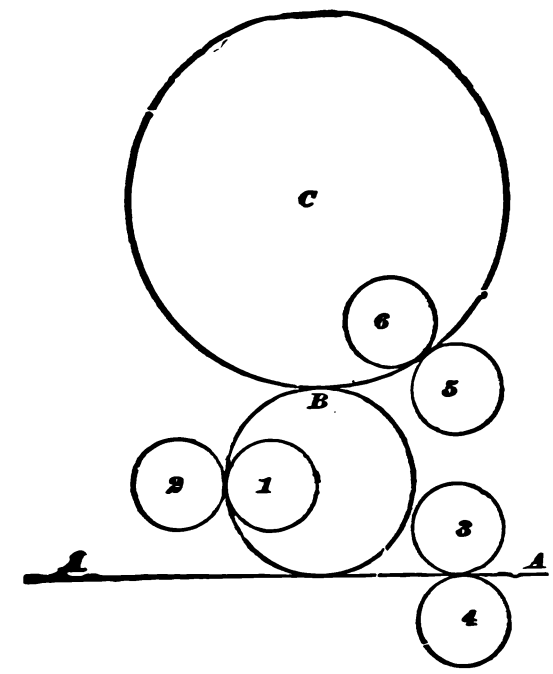

Fig. 37.

flanks of the teeth on C, and all the teeth will work correctly together however they be placed; thus C might receive motion from the rack, and B receive motion from C. Or if any number of different diameters of wheels are used they will all work correctly together and interchange perfectly, with the single condition that the same size of generating circle be used throughout. But the curves of the teeth so formed will not be alike. Thus in Fig. 38 are shown three teeth, all struck with the same size of

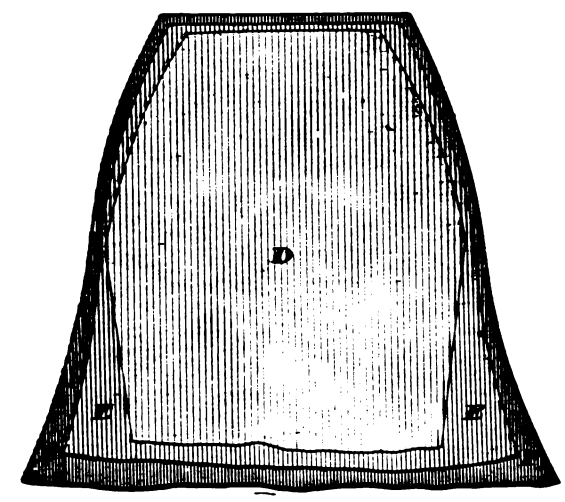

Fig. 38.

generating circle, D being for a wheel of 12 teeth, E for a wheel of 50 teeth, and F a tooth of a rack; teeth E, F, being made wider so as to let the curves show clearly on each side, it being obvious that since the curves are due to the relative sizes of the pitch and generating circles they are equally applicable to any pitch or thickness of teeth on wheels having the same diameters of pitch circle.

In determining the diameter of a generating circle for a set or

train of wheels, we have the consideration that the smaller the diameter of the generating circle in proportion to that of the

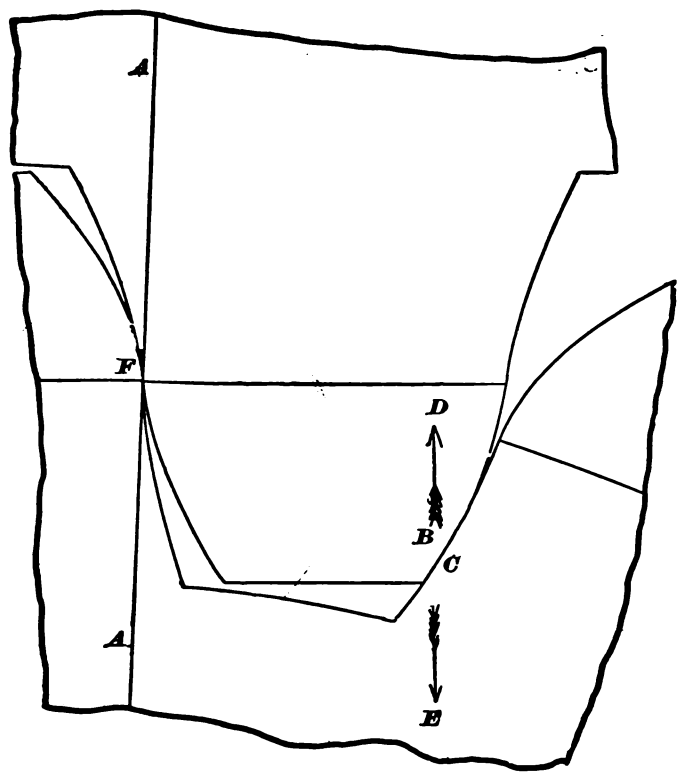

Fig. 39.

pitch circle the more the teeth are spread at the roots, and this creates a pressure tending to thrust the wheels apart, thus causing the axle journals to wear. In Fig. 39, for example, A A

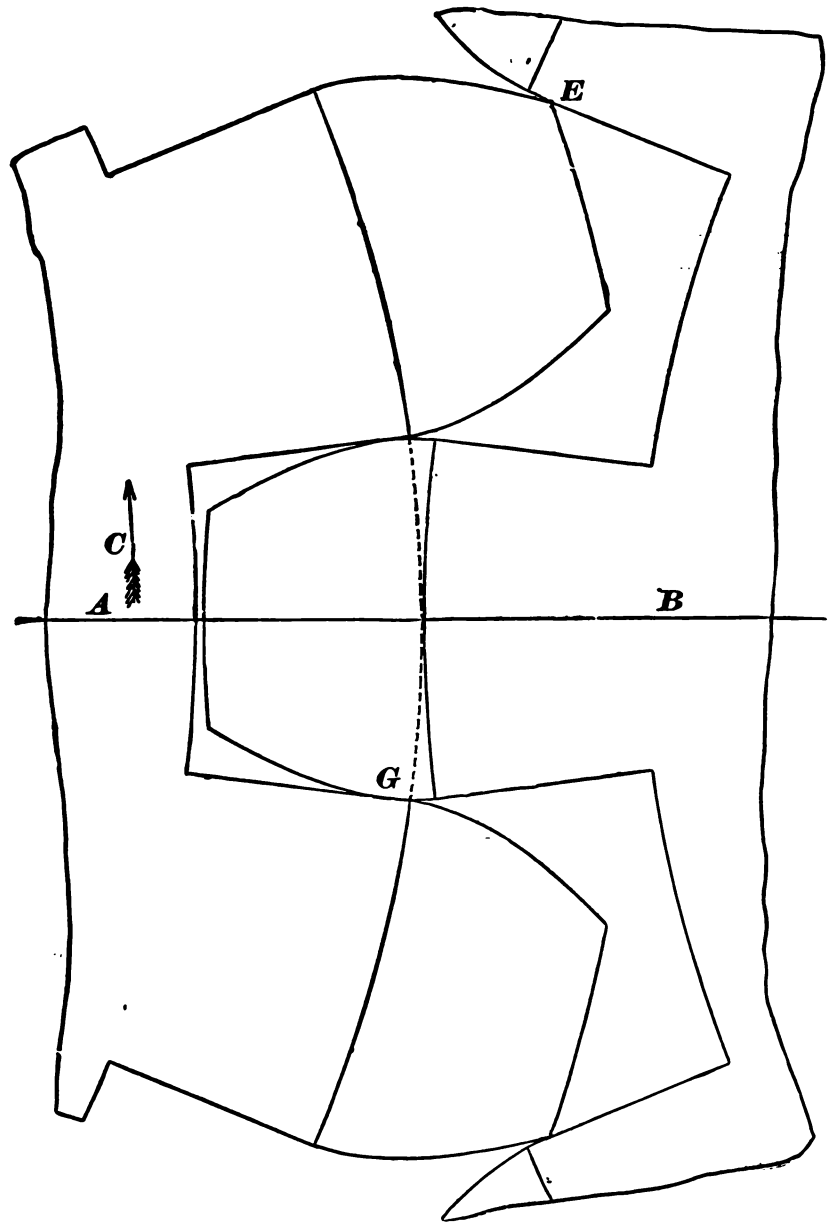

Fig. 40.

is the line of centres, and the contact of the curves at B C would cause a thrust in the direction of the arrows D, E. This thrust would exist throughout the whole path of contact save at the point F, on the line of centres. This thrust is reduced in proportion as the diameter of the generating circle is increased; thus in Fig. 40, is represented a pair of pinions of 12 teeth and 3 inch pitch, and C being the driver, there is contact at E, and at G, and E being a radial line, there is obviously a minimum of thrust.

What is known as the Willis system for interchangeable gearing, consists of using for every pitch of the teeth a generating circle whose diameter is equal to the radius of a pinion having 12 teeth, hence the pinion will in each pitch have radial flanks, and the roots of the teeth will be more spread as the number of teeth in the wheel is increased. Twelve teeth is the least number that it is considered practicable to use; hence it is obvious that under this system all wheels of the same pitch will work correctly together.

Unless the faces of the teeth and the flanks with which they work are curves produced from the same size of generating circle, the velocity of the teeth will not be uniform. Obviously the revolu-

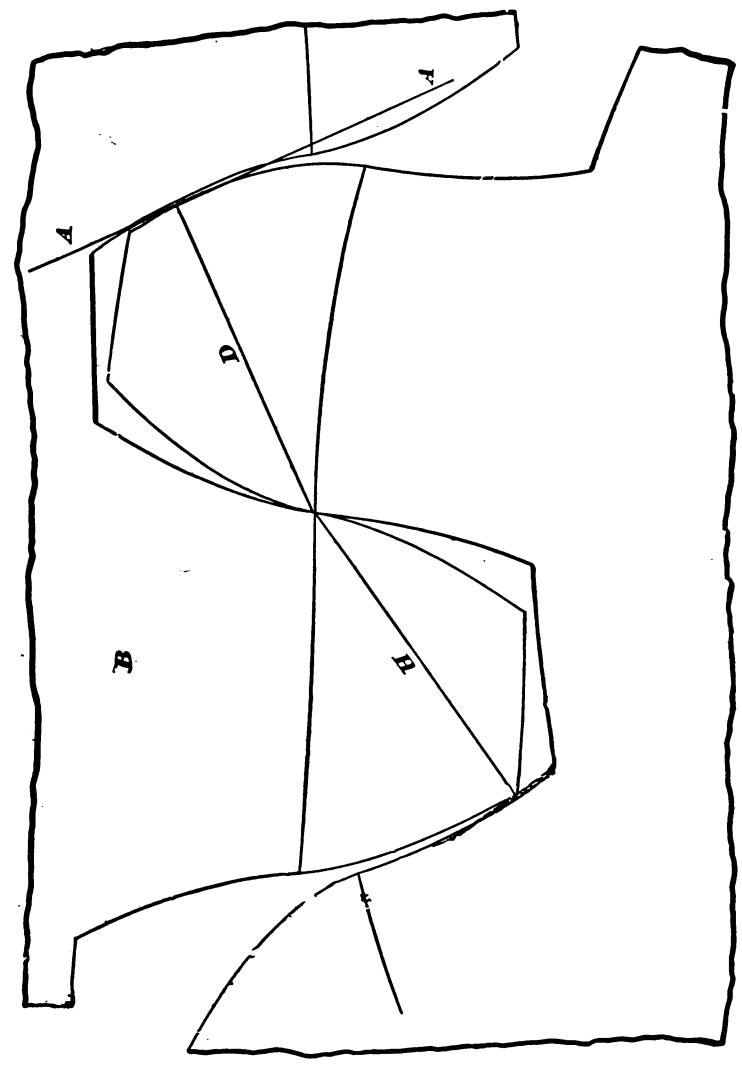

Fig. 41.

tions of the wheels will be proportionate to their numbers of teeth; hence in a pair of wheels having an equal number of teeth, the revolutions will per force be equal, but the driver will not impart uniform motion to the driven wheel, but each tooth will during the path of contact move irregularly.

The velocity of a pair of wheels will be uniform at each instant of time, if a line normal to the surfaces of the curves at their point of contact passes through the point of contact of the pitch circles on the line of centres of the wheels. Thus in Fig. 41, the line A A is tangent to the teeth curves where they touch, and D at a right angle to A A, and meets it at the point of the tooth curves, hence it is normal to the point of contact, and as it meets the pitch circles on the line of centres the velocity of the wheels will be uniform.

The amount of rolling motion of the teeth one upon the other while passing through the path of contact, will be a minimum when the tooth curves are correctly formed according to the rules given. But furthermore the sliding motion will be increased in proportion as the diameter of the generating circle is increased, and the number of teeth in contact will be increased because the

arc, or path, of contact is longer as the generating circle is made larger.

Thus in Fig. 42 is a pair of wheels whose tooth curves are from a generating circle equal to the radius of the wheels, hence the flanks are radial. The teeth are made of unusual depth to keep the lines in the engraving clear. Suppose V to be the driver, W the driven wheel or follower, and the direction of motion as at P, contact upon tooth A will begin at C, and while A is passing to the line of centres the path of contact will pass along the thickened line to X. During this time the whole length of face from C to R will have had contact with the length of flank from C to N, and it follows that the length of face on A that rolled on C N can only equal the length of C N, and that the amount of sliding motion must be represented by the length of R N on A, and the amount of rolling motion by the length N C. Again, during the arc of recess (marked by dots) the length of flank that will have had contact is the depth from S to L, and over this depth the full length of tooth face on wheel V will have swept, and as L S equals C N, the amount of rolling and of sliding motion during the arc of recess is equal to that during the arc of approach, and the action is in both cases partly a rolling and partly a sliding one. The two wheels are here shown of the same diameter, and therefore contain an equal number of teeth, hence the arcs of approach and of recess are equal in length, which will not be the case when one wheel contains more teeth than the other. Thus in Fig. 43, let A represent a segment of a pinion, and B a segment of a spur-wheel, both segments being blank with their pitch circles, the tooth height and depth being marked by arcs of circles. Let C and D represent the generating circles shown in the two respective positions on the line of centres. Let pinion A be the driver moving in the direction of P, and the arc of approach will be from E to X along the thickened arc, while the arc of recess will be as denoted by the dotted arc from X to F. The distance E X being greater than distance X F, therefore the arc of approach is longer than that of recess.

But suppose B to be the driver and the reverse will be the case, the arc of approach will begin at G and end at X, while the arc of recess will begin at X and end at H, the latter being farther from the line of centres than G is. It will be found also that, one wheel being larger than the other, the amount of sliding and rolling contact is different for the two wheels, and that the flanks of the teeth on the larger wheel B, have contact along a greater portion of their depths than do the flanks of those on the smaller, as is shown by the dotted arc I being farther from the pitch circle than the dotted arc J is, these two dotted arcs representing the paths of the lowest points of flank contact, points F and G, marking the initial lowest contact for the two directions of revolution.

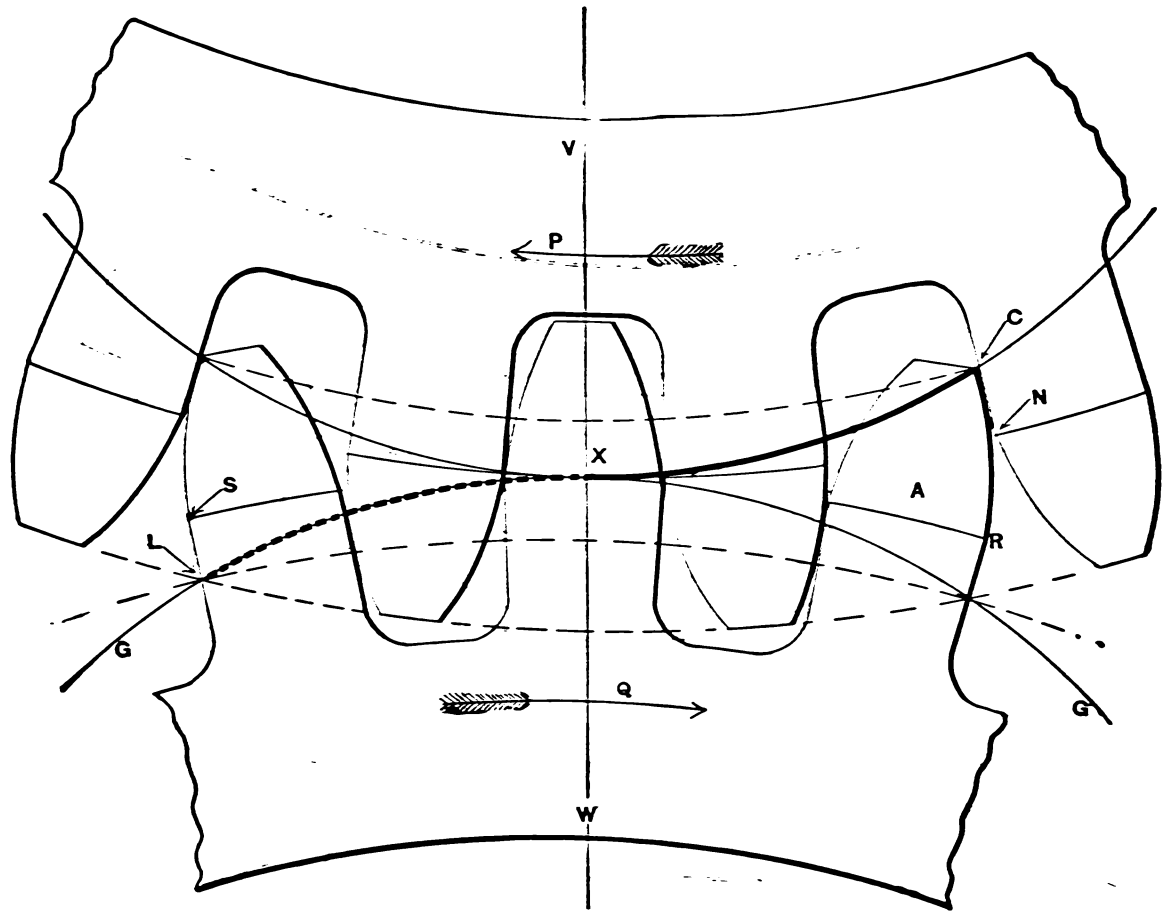

Fig. 42.

Thus it appears that there is more sliding action upon the teeth of the smaller than upon those of the larger wheel, and this is a condition that will always exist.

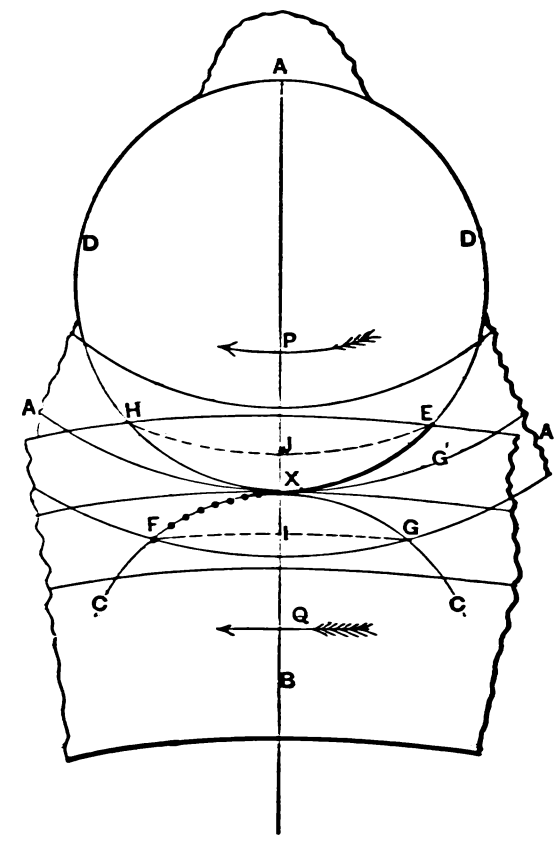

Fig. 43.

In Fig. 44 is represented portion of a pair of wheels corresponding to those shown in Fig. 42, except that in this case the diameter of the generating circle is reduced to one quarter that of the pitch diameter of the wheels. V is the driver in the direction

of P, and contact will begin at C; hence the depth of flank on the teeth of V that will have contact is C N, which, the wheels, being of equal diameter, will remain the same whichever wheel be the driver, and in whatever direction motion occurs. The amount of rolling motion is, therefore, C N, and that of sliding is the difference between the distance C N and the length of the tooth face.

If now we examine the distance C N in Fig. 42, we find that

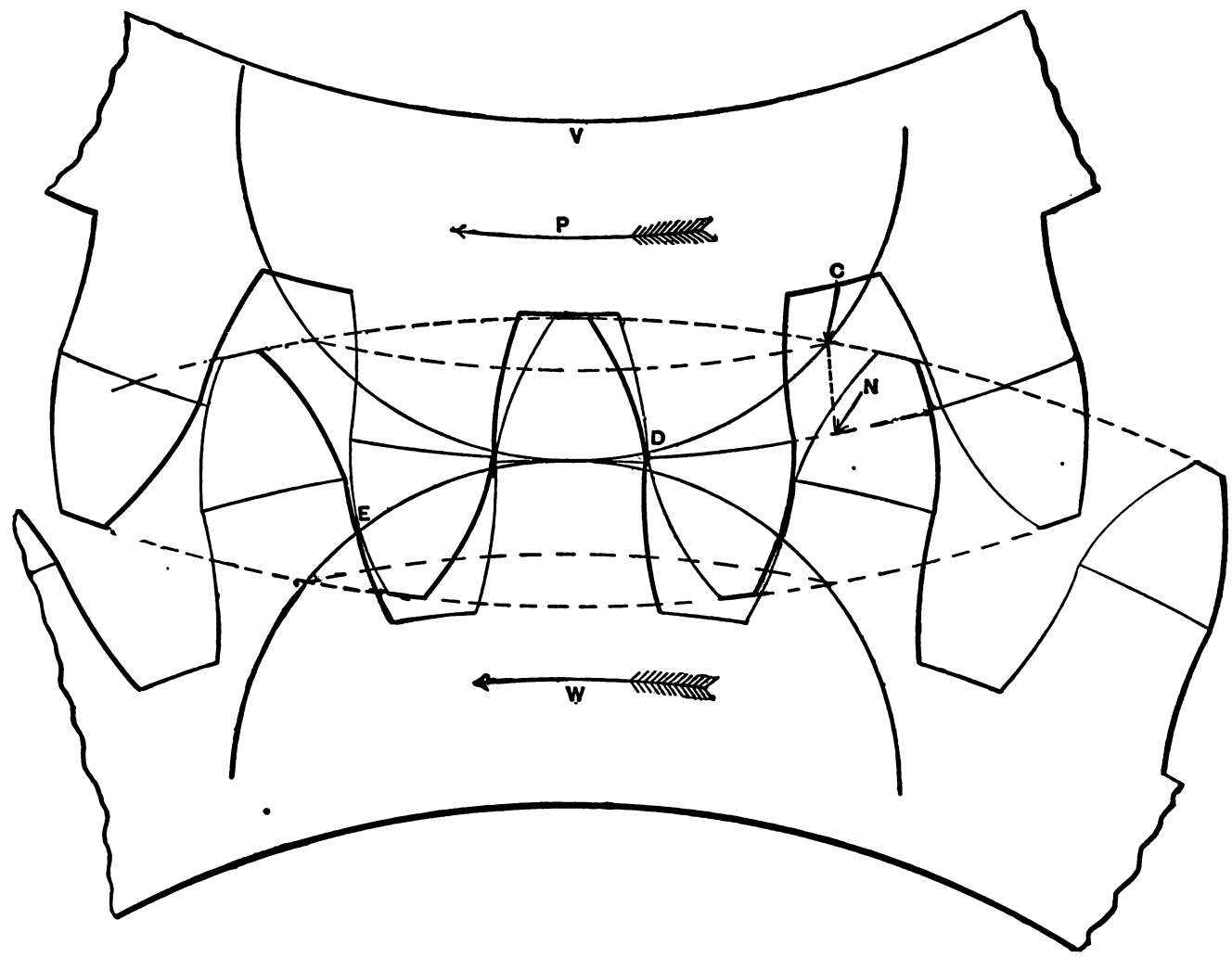

Fig. 44.

reducing the diameter of generating circle in Fig. 44 has increased the depth of flank that has contact, and therefore increased the rolling motion of the tooth face along the flank, and correspondingly diminished the sliding action of the tooth contact. But at the same time we have diminished the number of teeth in contact. Thus in Fig. 42 there are three teeth in driving contact, while in Fig. 44 there are but two, viz., D and E.

In an article by Professor Robinson, attention is called to the

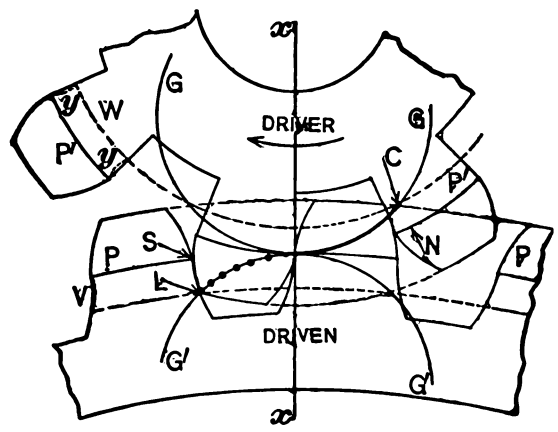

Fig. 45.

fact that if the teeth of wheels are not formed to have correct curves when new, they cannot be improved by wear; and this will be clearly perceived from the preceding remarks upon the amount of rolling and sliding contact. It will also readily appear that the nearer the diameter of the generating to that of the base circle the more the teeth wear out of correct shape; hence, in a train of gearing in which the generating circle equals the radius of the pinion, the pinion will wear out of shape the quickest, and the largest wheel the least; because not only does each tooth on the pinion more frequently come into action on account of its increased revolutions, but furthermore the length of flank that has contact is less, while the amount of sliding action is greater. In Fig. 45, for example, are a wheel and pinion, the latter having radial flanks and the pinion being the driver, the arc of approach is the thickened arc from C to the line of centres, while the arc of recess is denoted by the dotted arc. As contact on the pinion flank begins at point C and ends at the line of centres, the total depth of flank that suffers wear from the contact is that from C to N; and as the whole length of the wheel tooth face sweeps over this depth C N, the pinion flanks must wear faster than the wheel faces, and the pinion flanks will wear underneath, as denoted by the dotted curve on the flanks of tooth W. In the case of the wheel, contact on its tooth flanks begins at the line of centres and ends at L, hence that flank can only wear between point L and the pitch line S; and as the whole length of pinion face sweeps on this short length L S, the pinion flank will wear most, the wear being in the direction of the dotted arc on the left-hand side V of the tooth. Now the pinion flank depth C N, being less than the wheel flank depth S L, and the same length of tooth face sweeping (during the path of contact) over both, obviously the pinion tooth will wear the most, while both will, as the wear proceeds, lose their proper flank curve. In Fig. 46 the generating arcs, G and G', and the wheel are the same, but the pinion is larger. As a result the acting length C N, of pinion flank is increased, as is also the acting length S L, of wheel flank; hence, the flanks of both wheels would wear better, and also better preserve their correct and original shapes.

It has been shown, when referring to Figs. 42 and 44, when treating of the amount of sliding and of rolling motion, that the smaller the diameter of rolling circle in proportion to that of pitch circle, the longer the acting length of flank and the more the amount of rolling motion; and it follows that the teeth would also preserve their original and true shape better. But the wear of the teeth, and the alteration of tooth form by reason of that wear, will, in any event, be greater upon the pinion than upon the

wheel, and can only be equal when the two wheels are of equal diameter, in which case the tooth curves will be alike on both wheels, and the acting depths of flank will be equal, as shown in Fig. 47, the flanks being radial, and the acting depths of flank being shown at J K. In Fig. 48 is shown a pair of wheels with a generating circle, G and G′, of one quarter the diameter of the base circle or pitch diameter, and the acting length of flank is

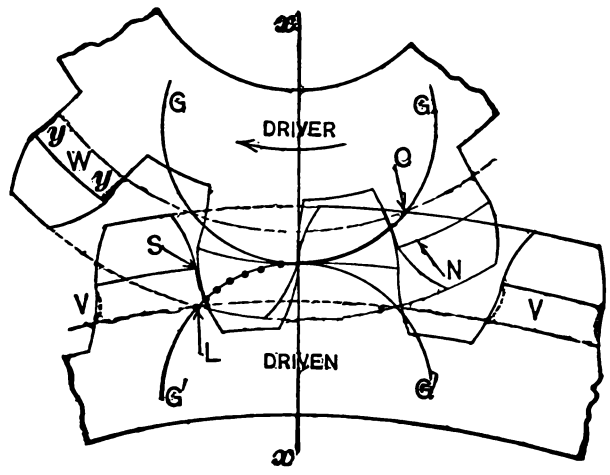

Fig. 46.

shown at L M. The wear of the teeth would, therefore, in this latter case, cause it in time to assume the form shown in Fig. 49. But it is to be noted that while the acting depth of flank has been increased the arcs of contact have been diminished, and that in Fig. 47 there are two teeth in contact, while in Fig. 48 there is but one, hence the pressure upon each tooth is less in proportion as the diameter of the generating circle is increased. If a train of wheels are to be constructed, or if the wheels are to be capable

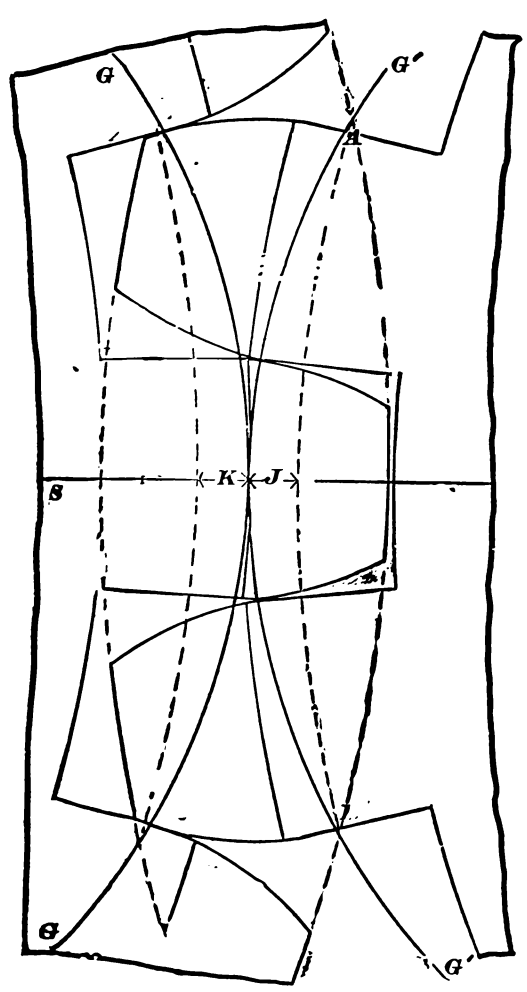

Fig. 47.

of interchanging with other combinations of wheels of the same pitch, the diameter of the generating circle must be equal to the smallest wheel or pinion, which is, under the Willis system, a pinion of 12 teeth; under the Pratt and Whitney, and Brown and Sharpe systems, a pinion of 15 teeth.

But if a pair or a particular train of gears are to be constructed, then a diameter of generating circle may be selected that is considered most suitable to the particular conditions; as, for example, it may be equal to the radius of the smallest wheel giving it radial flanks, or less than that radius giving parallel or spread flanks. But in any event, in order to transmit continuous motion, the diameter of generating circle must be such as to give arcs of action that are equal to the pitch, so that each pair of teeth will come into action before the preceding pair have gone out of action.

It may now be pointed out that the degrees of angle that the teeth move through always exceeds the number of degrees of

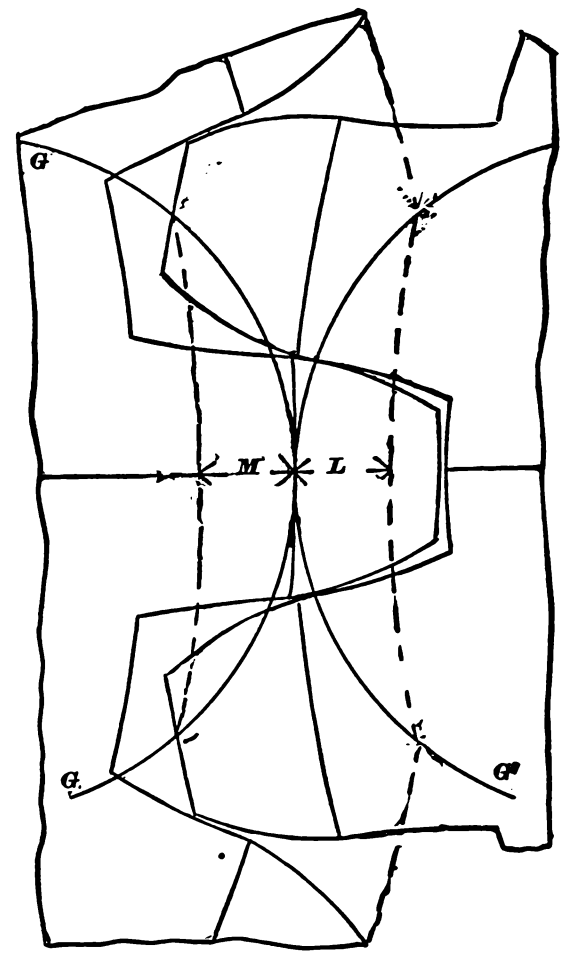

Fig. 48.

angle contained in the paths of contact, or, in other words, exceeds the degrees contained in the arcs of approach and recess combined.

In Fig. 50, for example, are a wheel A and pinion B, the teeth on the wheel being extended to a point. Suppose that the wheel A is the driver, and contact will begin between the two teeth D and F on the dotted arc. Now suppose tooth D to have moved to position C, and F will have been moved to position H. The

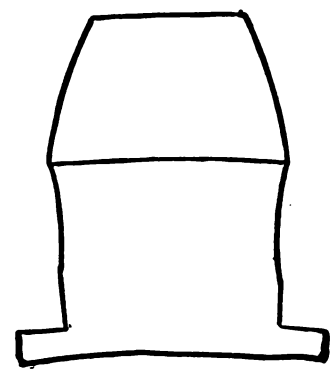

Fig. 49.

degrees of angle the pinion has been moved through are therefore denoted by I, whereas the degrees of angle the arcs of contact contain are therefore denoted by J.

The degrees of angle that the wheel A has moved through are obviously denoted by E, because the point of tooth D has during the arcs of contact moved from position D to position C. The degrees of angle contained in its path of contact are denoted by K, and are less than E, hence, in the case of teeth terminating in a point as tooth D, the excess of angle of action over path of contact is as many degrees as are contained in one-half the thickness

of the tooth, while when the points of the teeth are cut off, the excess is the number of degrees contained in the distance between the corner and the side of the tooth as marked on a tooth at P.

With a given diameter of pitch circle and pitch diameter of wheel, the length of the arc of contact will be influenced by the

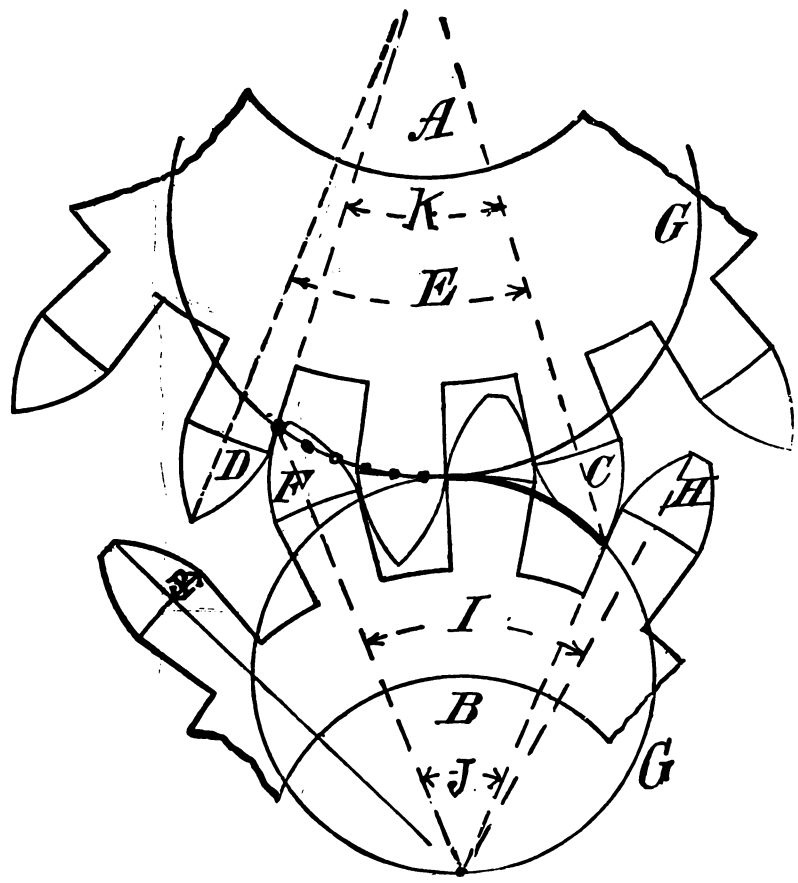

Fig. 50.

height of the addendum from the pitch circle, because, as has been shown, the arcs of approach and of recess, respectively, begin and end on the addendum circle.

If the height of the addendum on the follower be reduced, the arc of approach will be reduced, while the arc of recess will not be altered; and if the follower have no addendum, contact between the teeth will occur on the arc of recess only, which gives a smoother motion, because the action of the driver is that of dragging rather than that of pushing the follower. In this case, however, the arc of recess must, to produce continuous motion, be at least equal to the pitch.

It is obvious, however, that the follower having no addendum would, if acting as a driver to a third wheel, as in a train of wheels, act on its follower, or the fourth wheel of the train, on the arc of approach only; hence it follows that the addendum might be reduced to diminish, or dispensed with to eliminate action, on the arc of approach in the follower of a pair of wheels only, and not in the case of a train of wheels.

To make this clear to the reader it may be necessary to refer again to Fig. 33 or 34, from which it will be seen that the action of the teeth of the driver on the follower during the arc of approach is produced by the flanks of the driver on the faces of the follower. But if there are no such faces there can be no such contact.

On the arc of recess, however, the faces of the driver act on the flanks of the follower, hence the absence of faces on the follower is of no import.

From these considerations it also appears that by giving to the driver an increase of addendum the arc of recess may be increased without affecting the arc of approach. But the height of addendum in machinists' practice is made a constant proportion of the pitch, so that the wheel may be used indiscriminately, as circumstances may require, as either a driver or a follower, the arcs of approach and of recess being equal. The height of addendum, however, is an element in determining the number of teeth in contact, and upon small pinions this is of importance.

In Fig. 51, for example, is shown a section of two pinions of equal diameters, and it will be observed that if the full line A determined the height of the addendum there would be contact either at C or B only (according to the direction in which the motion took place).

With the addendum extended to the dotted circle, contact would be just avoided, while with the addendum extended to D there would be contact either at E or at F, according to which direction the wheel had motion.

This, by dividing the strain over two teeth instead of placing it all upon one tooth, not only doubles the strength for driving capacity, but decreases the wear by giving more area of bearing surface at each instant of time, although not increasing that area in proportion to the number of teeth contained in the wheel.

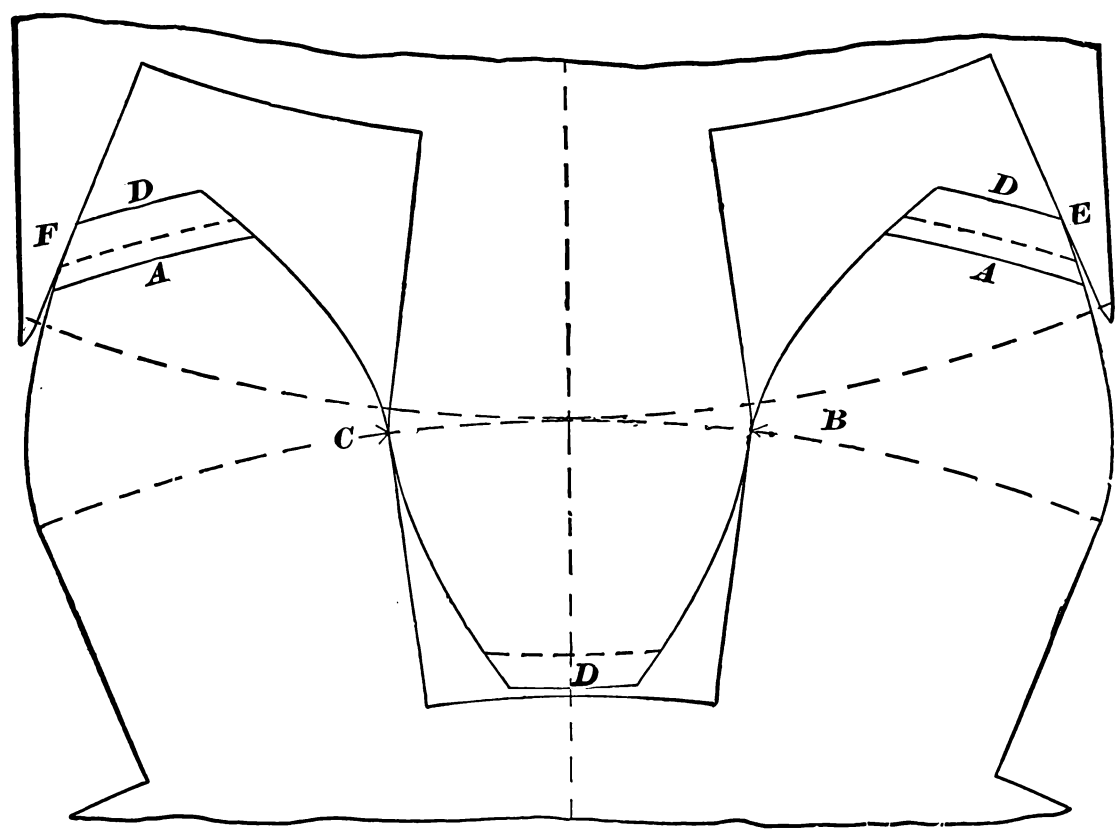

Fig. 51.

In wheels of larger diameter, short teeth are more permissible, because there are more teeth in contact, the number increasing with the diameters of the wheels. It is to be observed, however, that from having radial flanks, the smallest wheel is always the weakest, and that from making the most revolutions in a given

time, it suffers the most from wear, and hence requires the greatest attainable number of teeth in constant contact at each period of time, as well as the largest possible area of bearing or wearing surface on the teeth.

It is true that increasing the "depth of tooth to pitch line" increases the whole length of tooth, and, therefore, weakens it; but this is far more than compensated for by distributing the strain over a greater number of teeth. This is in practice accomplished, *when circumstances will permit*, by making the

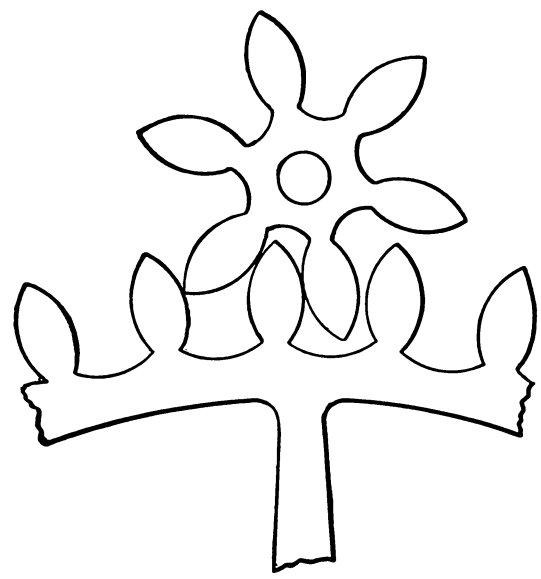

Fig. 52.

pitch finer, giving to a wheel, of a given diameter, a greater number of teeth.

When the wheels are required to transmit motion rather than power (as in the case of clock wheels), to move as frictionless as possible, and to place a minimum of thrust on the journals of the shafts of the wheels, the generating circle may be made nearly as large as the diameter of the pitch circle, producing teeth of the form shown in Fig. 52. But the minimum of friction is attained when the two flanks for the tooth are drawn into one common hypocycloid, as in Fig. 53. The difference between the form of tooth shown in Fig. 52 and that shown in Fig. 53, is merely due to an increase in the diameter of the generating circle for the latter. It will be observed that in these forms the

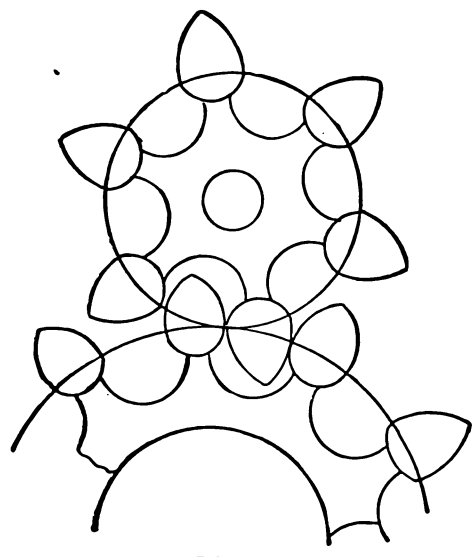

Fig. 53.

acting length of flank diminishes in proportion as the diameter of the generating circle is increased, the ultimate diameter of generating circle being as large as the pitch circles.

* This form is undesirable in that there is contact on one side only (on the arc of approach) of the line of centres, but the flanks of the teeth may be so modified as to give contact on the arc of recess also, by forming the flanks as shown in Fig. 54, the flanks, or rather the parts within the pitch circles, being nearly half circles, and the parts without with peculiarly formed faces, as shown in the figure. The pitch circles must still be regarded as the rolling circles rolling upon each other. Suppose *b* a tracing point on B, then as B rolls on A it will describe the epicycloid *a b*.

* From an article by Professor Robinson.

A parallel line *c d* will work at a constant distance as at *c d* from *a b*, and this distance may be the radius of that part of D that is within the pitch line, the same process being applied to the teeth on both wheels. Each tooth is thus composed of a spur based upon a half cylinder.

Comparing Figs. 53 and 54, we see that the bases in 53 are flattest, and that the contact of faces upon them must range

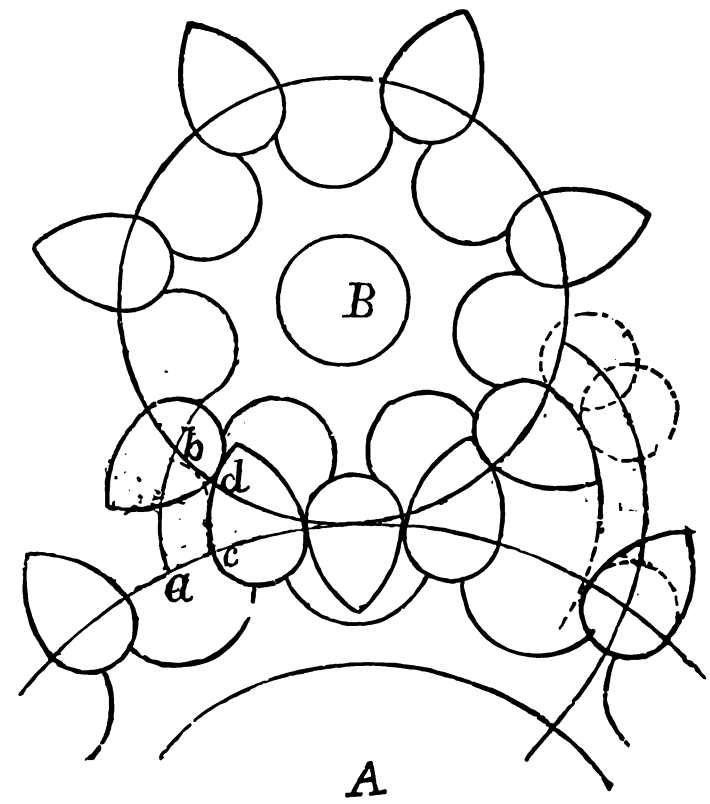

Fig. 54.

nearer the pitch line than in 54. Hence, 53 presents a more favorable obliquity of the line of direction of the pressures of tooth upon tooth. In seeking a still more favorable direction by going outside for the point of contact, we see by simply recalling the method of generating the tooth curves, that tooth contacts outside the pitch lines have no possible existence; and hence, Fig. 53 may be regarded as representing that form of toothed gear which will operate with less friction than any other known form.

This statement is intended to cover fixed teeth only, and not that complicated form of the trundle wheel in which the cylinder

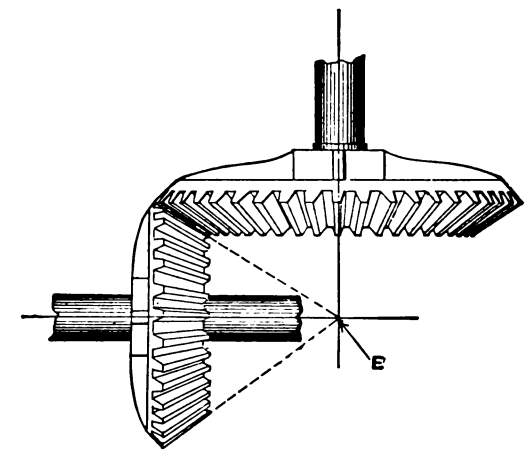

Fig. 55.

teeth are friction rollers. No doubt such would run still easier, even with their necessary one-sided contacts. Also, the statement is supposed to be confined to such forms of teeth as have good practical contacts at and near the line of centres.

Bevel-gear wheels are employed to transmit motion from one shaft to another when the axis of one is at an angle to that of the other. Thus in Fig. 55 is shown a pair of bevel-wheels to transmit motion from shafts at a right angle. In bevel-wheels all the lines of the teeth, both at the tops or points of the teeth, at the bottoms of the spaces, and on the sides of the teeth, radiate from the centre E, where the axes of the two shafts would meet if produced. Hence the depth, thickness, and height of the tooth decreases as

the point E is approached from the diameter of the wheel, which is always measured on the pitch circle at the largest end of the cone, or in other words, at the largest pitch diameter.

The principles governing the practical construction of the curves for the teeth of the bevel-wheels may be explained as follows :—

In Fig. 56 let F and G represent two shafts, rotating about their respective axes; and having cones whose greatest diameters are at A and B, and whose points are at E. The diameter A being

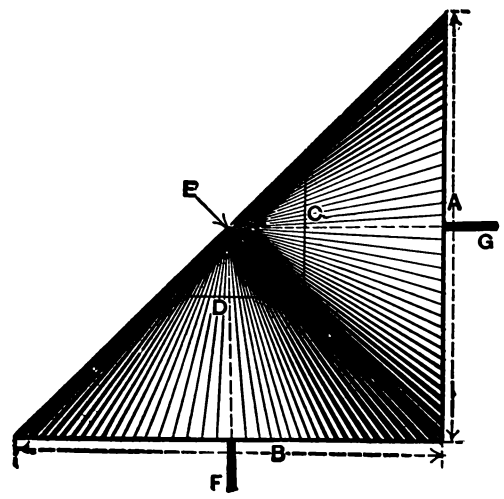

Fig. 56.

equal to that of B their circumferences will be equal, and the angular and velocity ratios will therefore be equal.

Let C and D represent two circles about the respective cones, being equidistant from E, and therefore of equal diameters and circumferences, and it is obvious that at every point in the length of each cone the velocity will be equal to a point upon the other so long as both points are equidistant from the points of intersection of the axes of the two shafts; hence if one cone drive the other by frictional contact of surfaces, both shafts will be rotated at an equal speed of rotation, or if one cone be fixed and the other moved around it, the contact of the surfaces will be a rolling contact throughout. The line of contact between the two cones will be a straight line, radiating at all times from the point E. If such, however, is not the case, then the contact will no longer be a rolling one. Thus, in Fig. 57 the diameters or circumferences at A and B being equal, the surfaces would roll upon each other, but on account of the line of contact not radiating from E (which is the common centre of motion for the two

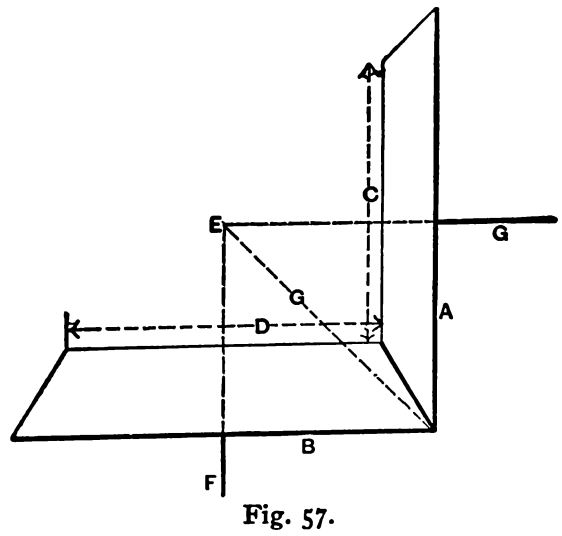

Fig. 57.

shafts) the circumference C is less than that of D, rendering a rolling contact impossible.

We have supposed that the diameters of the cones be equal, but the conditions will remain the same when their diameters are unequal; thus, in Fig. 58 the circumference of A is twice that of B, hence the latter will make two rotations to one of the former, and the contact will still be a rolling one. Similarly the circumference of D is one half that of C, hence D will also make two rotations to one of C, and the contact will also be a rolling one; a condition which will always exist independent of the diameters of the wheels so long as the angles of the faces, or wheels, or (what is the same thing, the line of contact between the two,) radiates from the point E, which is located where the axes of the shafts would meet.

The principles governing the forms of the cones on which the teeth are to be located thus being explained, we may now consider the curves of the teeth. Suppose that in Fig. 59 the cone A is fixed, and that the cone whose axis is F be rotated upon it in the direction of the arrow. Then let a point be fixed in any part

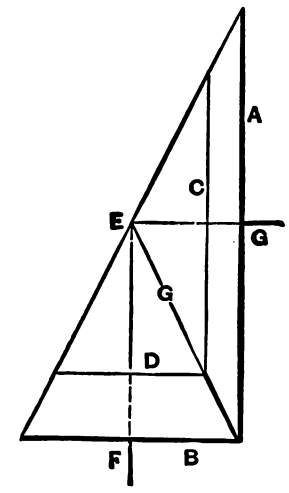

Fig. 58.

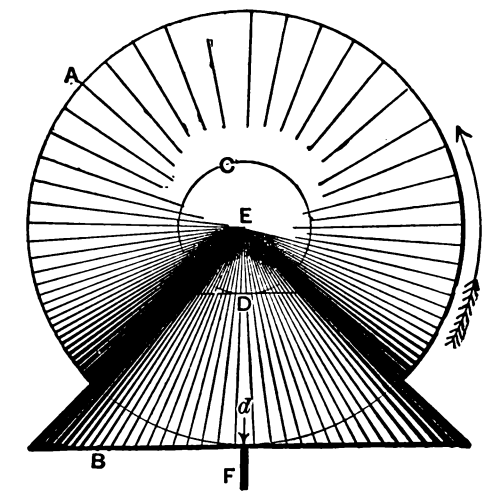

Fig. 59.

of the circumference of B (say at d), and it is evident that the path of this point will be as B rolls around the axis F, and at the same time around A from the centre of motion, E. The curve so generated or described by the point d will be a spherical epicycloid. In this case the exterior of one cone has rolled upon the coned surface of the other; but suppose it rolls upon the interior, as around the walls of a conical recess in a solid body; then a point in its circumference would describe a curve known as the

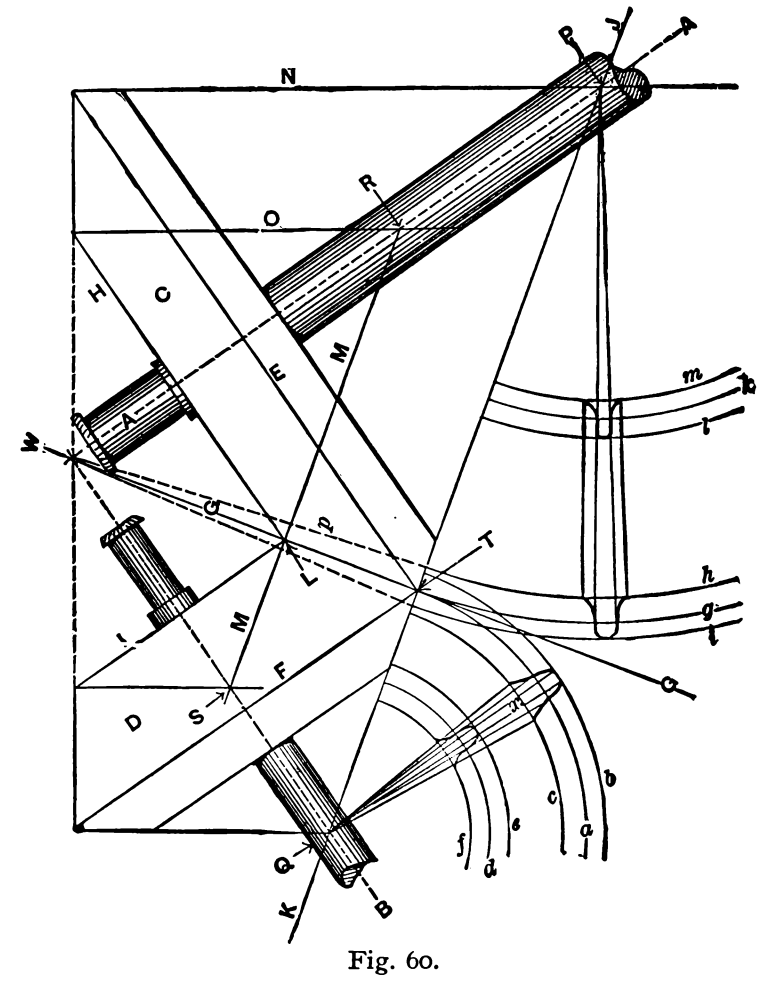

Fig. 60.

spherical hypocycloid; both curves agreeing (except in their spherical property) to the epicycloid and hypocycloid of the spur-wheel. But this spherical property renders it very difficult indeed to practically delineate or mark the curves by rolling contact, and on account of this difficulty Tredgold devised a method of construction whereby the curves may be produced sufficiently accurate for all practical purposes, as follows :—

In Fig. 60 let A A represent the axis of one shaft, and B the axis of the other, the axes of the two meeting at W. Mark E,

representing the diameter of one wheel, and F that of the other (both lines representing the pitch circles of the respective wheels). Draw the line G G passing through the point W, and the point T, where the pitch circles E, F meet, and G G will be the line of contact between the cones. From W as a centre, draw on each side of G G dotted lines as *p*, representing the height of the teeth above and below the pitch line G G. At a right angle to G G mark the line J K, and from the junction of this line with axis B (as at Q) as a centre, mark the arc *a*, which will represent the pitch circle for the large diameter of pinion D; mark also the arc *b* for the addendum and *c* for the roots of the teeth, so that from *b* to *c* will represent the height of the tooth at that end.

Similarly from P, as a centre, mark (for the large diameter of wheel C,) the pitch circle *g*, root circle *h*, and addendum *i*. On these arcs mark the curves in the same manner as for spur-wheels. To obtain these arcs for the small diameters of the wheels, draw M M parallel to J K. Set the compasses to the radius R L, and from P, as a centre, draw the pitch circle *k*. To obtain the depth for the tooth, draw the dotted line *p*, meeting the circle *h*, and the point W. A similar line from circle *i* to W will show the height of the addendum, or extreme diameter; and mark the tooth curves on *k*, *l*, *m*, in the same manner as for a spur-wheel.

Similarly for the pitch circle of the small end of the pinion teeth, set the compasses to the radius S L, and from Q as a centre, mark the pitch circle *d*, outside of *d* mark *e* for the height of the addendum and inside of *d* mark *f* for the roots of the teeth at that end. The distance between the dotted lines (as *p*) represents the full height of the teeth, hence *h* meets line *p*, being the root of tooth for large wheel, and to give clearance, the point of the pinion teeth is marked below, thus arc *b* does not meet *h* or *p*. Having obtained these arcs the curves are rolled as for a spur-wheel.

A tooth thus marked out is shown at *x*, and from its curves between *b c*, a template for the large diameter of the pinion tooth may be made, while from the tooth curves between the arcs *e f*, a template for the smallest tooth diameter of the pinion can be made.

Similarly for the wheel C the outer end curves are marked on the lines *g*, *h*, *i*, and those for the inner end on the lines *k*, *l*, *m*.

Internal or annular gear-wheels have their tooth curves formed by rolling the generating circle upon the pitch circle or base circle, upon the same general principle as external or spur-wheels. But the tooth of the annular wheel corresponds with the space in the spur-wheel, as is shown in Fig. 61, in which curve A forms the flank of a tooth on a spur-wheel P, and the face of a tooth on the annular wheel W. It is obvious then that the generating circle is rolled within the pitch circle for the face of the wheel and without for its flank, or the reverse of the process for spur-wheels. But in the case of internal or annular wheels the path of contact of tooth upon tooth with a pinion having a given number of teeth increases in proportion as the number of teeth in the wheel is diminished, which is also the reverse of what occurs in spur-wheels; as will readily be perceived when it is considered that if in an internal wheel the pinion have as many teeth as the wheel the contact would exist around the whole pitch circles of the wheel and pinion and the two would rotate together without any motion of tooth upon tooth. Obviously then we have, in the case of internal wheels, a consideration as to what is the greatest number (as well as what is the least number) of teeth a pinion may contain to work with a given wheel, whereas in spur-wheels the reverse is again the case, the consideration being how few teeth the wheel may contain to work with a given pinion Now it is found that although the curves of the teeth in interna wheels and pinions may be rolled according to the principles already laid down for spur-wheels, yet cases may arise in which internal gears will not work under conditions in which spur-wheels would work, because the internal wheels will not engage together. Thus, in Fig. 62, is a pinion of 12 teeth and a wheel of 22 teeth, a generating circle having a diameter equal to the radius of the pinion having been used for all the tooth curves of both wheel and pinion. It will be observed that teeth A, B, and C clearly overlap teeth D, E, and F, and would therefore prevent the wheels from engaging to the requisite depth. This may of course be remedied by taking the faces off the pinion, as in Fig. 63, and thus confining the arc of contact to an arc of recess if the pinion drives, or an arc of approach if the wheel drives; or the number of teeth in the pinion may be reduced, or that in the wheel increased; either of which may be carried out to a degree sufficient to enable the teeth to engage and not interfere one with the other. In Fig. 64 the number of teeth in the pinion P is reduced from 12 to 6, the wheel W having 22 as before, and it will be observed that the teeth engage and properly clear each other.

By the introduction into the figure of a segment of a spur-

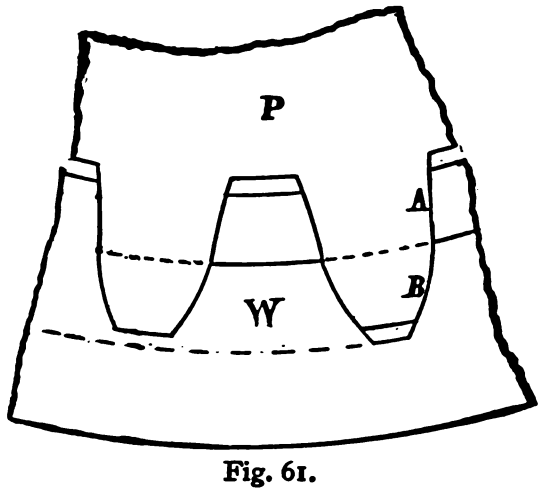

Fig. 61.

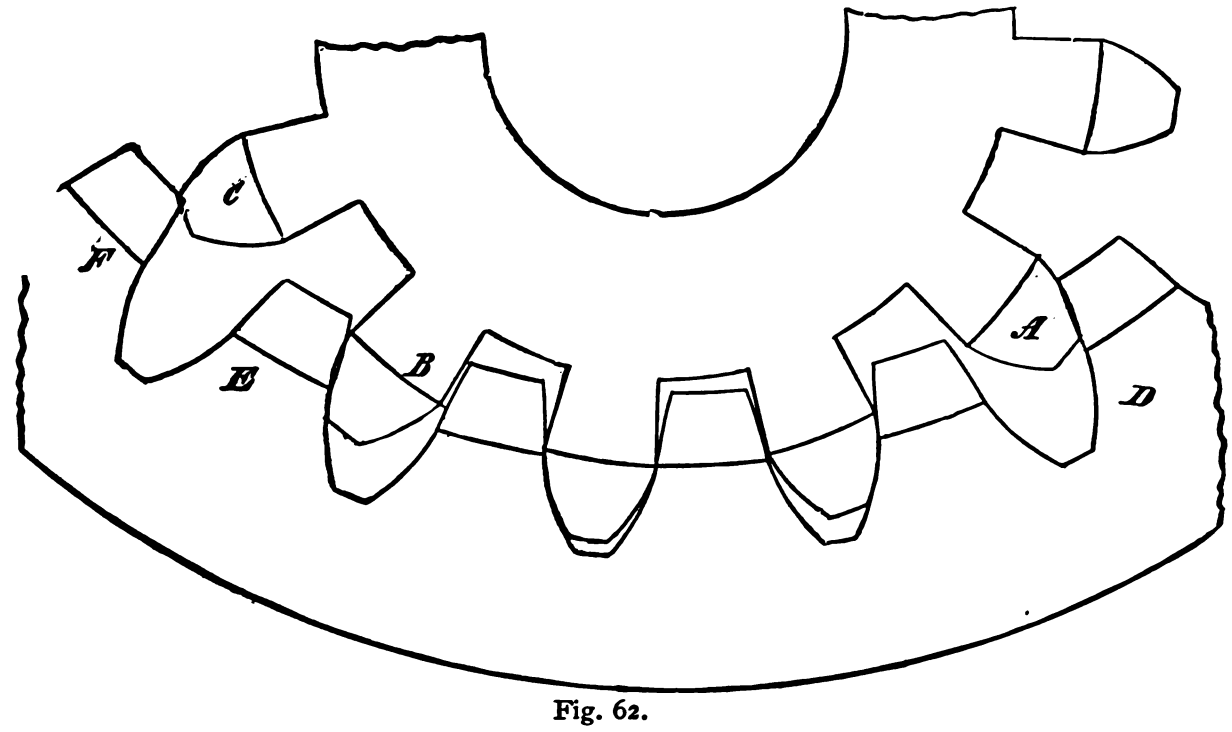

Fig. 62.

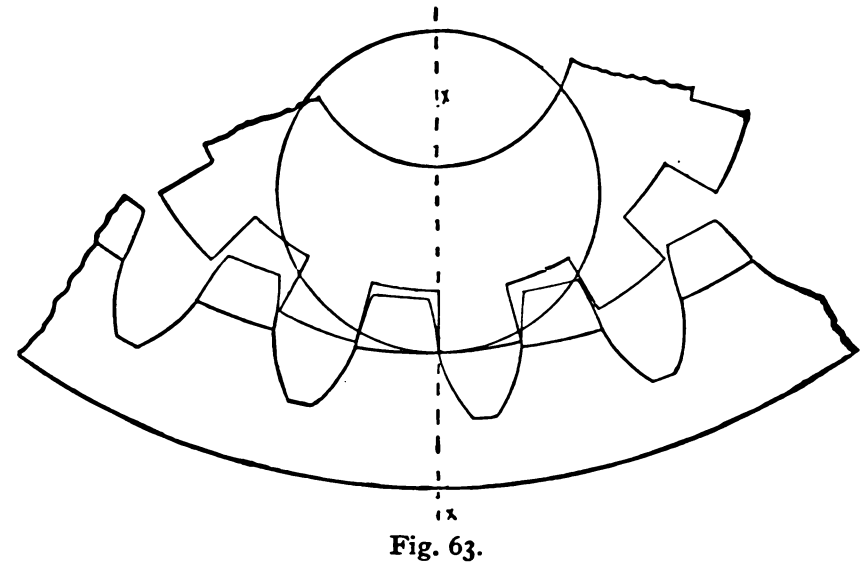

Fig. 63.

wheel also having 22 teeth and placed on the other side of the pinion, it is shown that the path of contact is greater, and therefore the angle of action is greater, in internal than in spur gearing. Thus suppose the pinion to drive in the direction of the arrows and the thickened arcs A B will be the arcs of approach, A measuring longer than B. The dotted arcs C D represent the arcs of receding contact and C is found longer than D, the angles of action being 66° for the spur-wheels and 72° for the annular wheel.

On referring again to Fig. 62 it will be observed that it is the faces of the teeth on the two wheels that interfere and will prevent them from engaging, hence it will readily occur to the mind that it is possible to form the curves of the pinion faces correct to work with the faces of the wheel teeth as well as with the flanks; or it is possible to form the wheel faces with curves that will work correctly with the faces, as well as with the flanks of the pinion teeth, which will therefore increase the angle of action, and professor McCord has shown in an article in the London *Engineering* how to accomplish this in a simple and yet exceedingly ingenious manner which may be described as follows :—

It is required to find a describing circle that will roll the

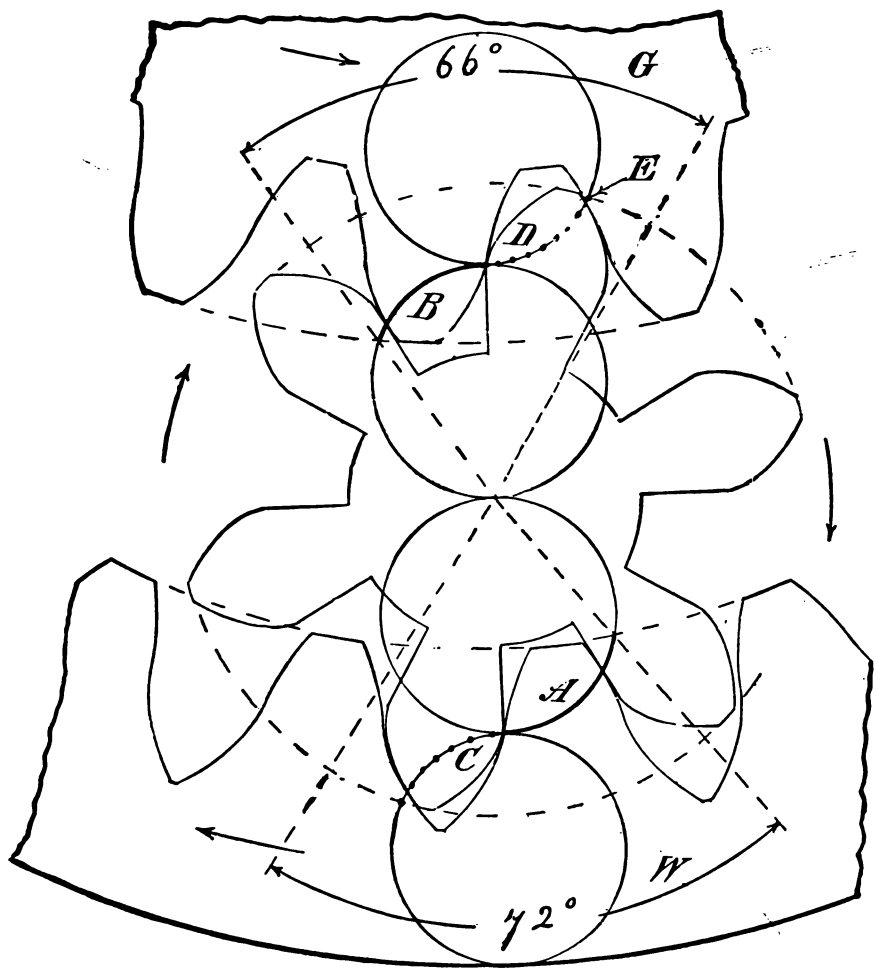

Fig. 64.

curves for the flanks of the pinion and the faces of the wheels, and also a describing circle for the flanks of the wheel and the faces of the pinion; the curve for the wheel faces to work correctly with the faces as well as with the flanks of the pinion, and the curve for the pinion faces to work correctly with both the flanks and faces of the internal wheel.

In Fig. 65 let P represent the pitch circle of an annular or internal wheel whose centre is at A, and Q the pitch circle of a pinion whose centre is at B, and let R be a describing circle whose centre is at C, and which is to be used to roll all the curves for the teeth. For the flanks of the annular wheel we may roll R within P, while for the faces of the wheel we may roll R outside of P, but in the case of the pinion we cannot roll R within Q, because R is larger than Q, hence we must find some other rolling circle of less diameter than R, and that can be used in its stead (the radius of R always being greater than the radius of the axis of the wheel and pinion for reasons that will appear presently). Suppose then that in Fig. 66 we have a ring whose bore R corresponds in diameter to the intermediate describing circle R, Fig. 65 and that Q represents the pinion. Then we may roll R around and in contact with the pinion Q, and a tracing point in R will trace the curve M N O, giving a curve a portion of which may be used for the faces of the pinion. But suppose that instead of rolling the intermediate describing circle R around P,

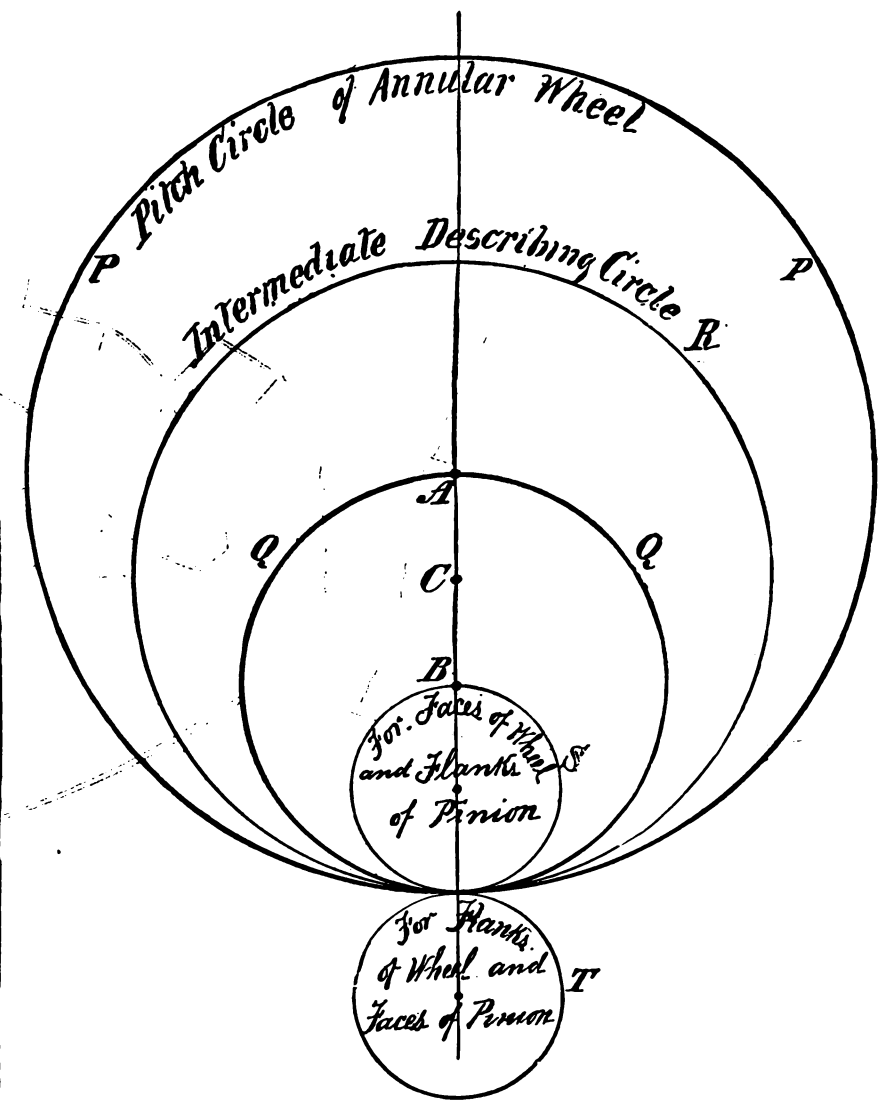

Fig. 65.

we roll the circle T around P, and it will trace precisely the same curve M N O; hence for the faces of the pinion we have found a rolling circle T which is a perfect substitute for the intermediate

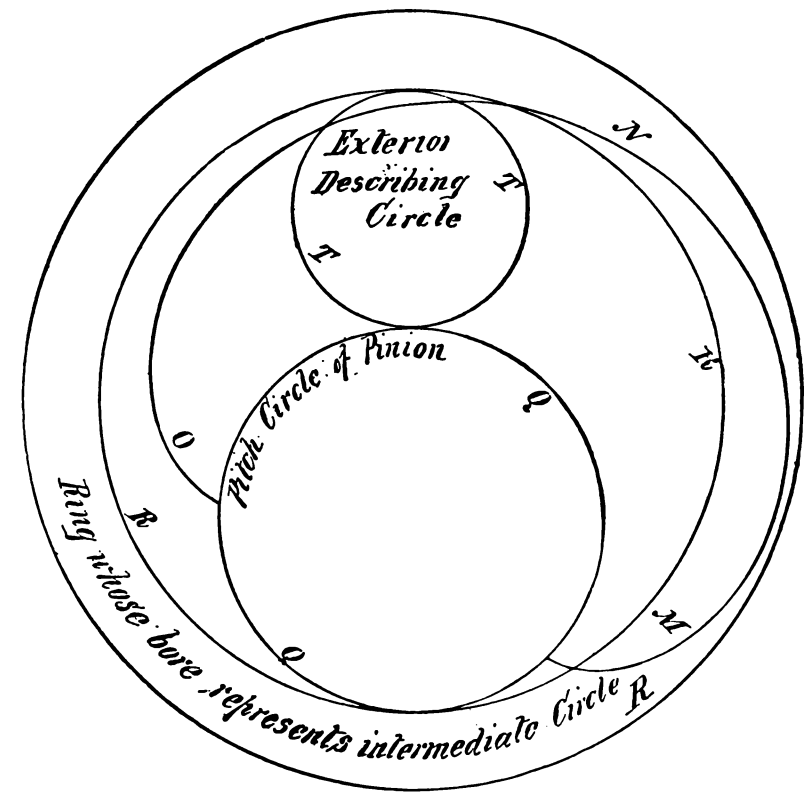

Fig. 66.

circle Q, and which it will always be, no matter what the diameters of the pinion and of the intermediate describing circle may be, providing that the diameter of T is equal to the difference between the diameters of the pinion and that of the intermediate describing

circle as in the figure. If now we use this describing circle to roll the flanks of the annular wheel as well as the faces of the pinion, these faces and flanks will obviously work correctly together. Since this describing circle is rolled on the outside of the pinion and on the outside of the annular wheel we may distinguish it as the exterior describing circle.

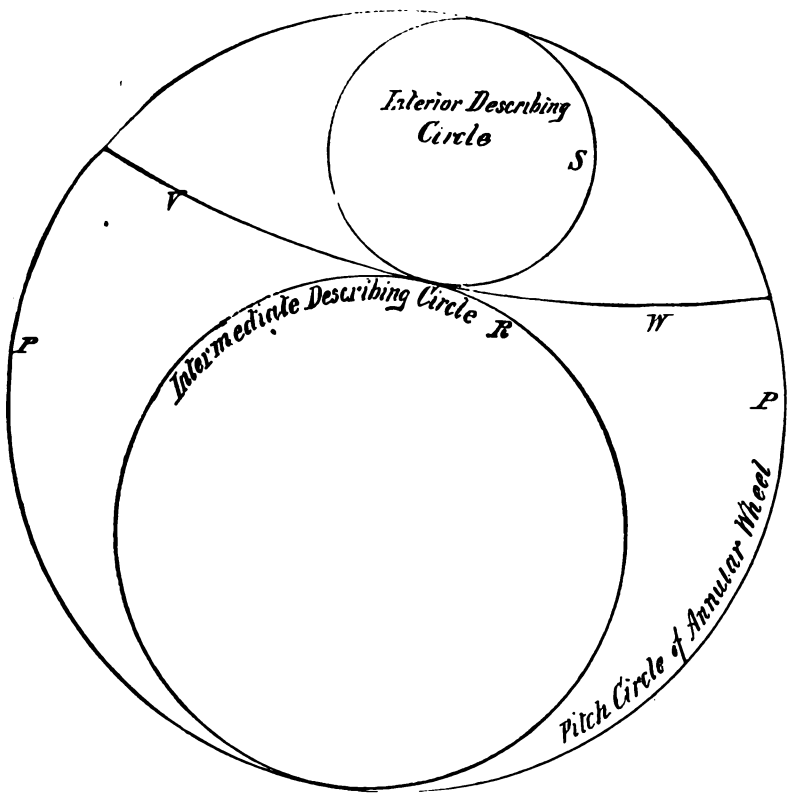

Fig. 67.

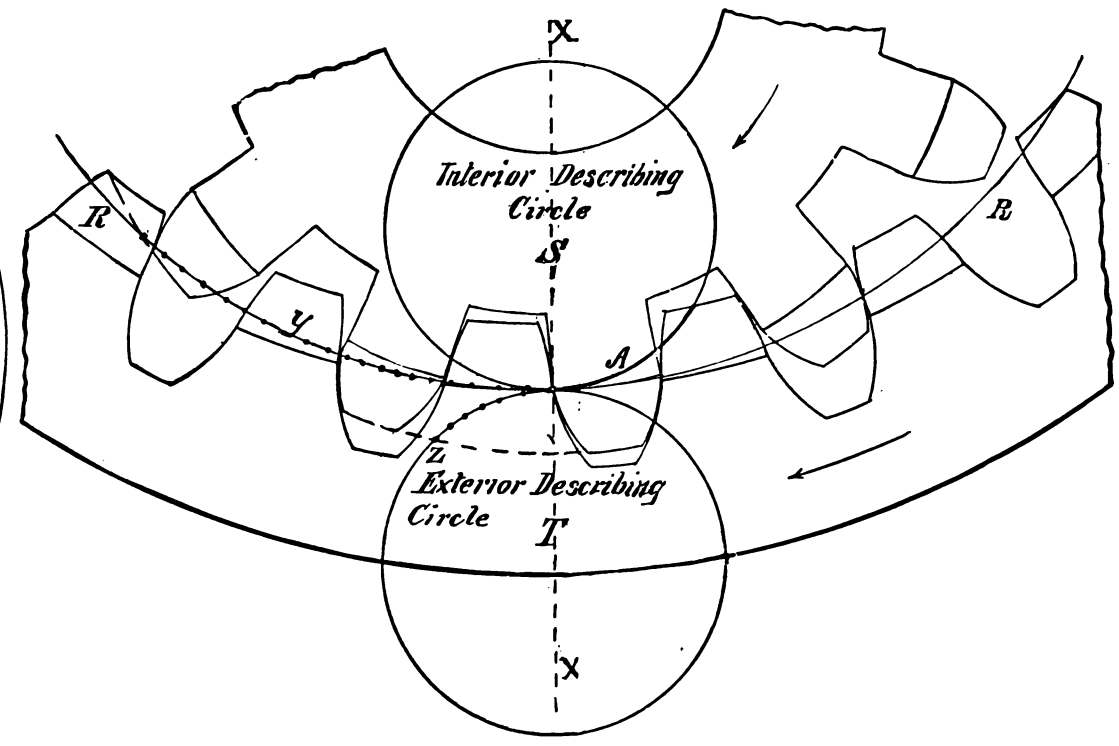

Fig. 68.

Now instead of rolling the intermediate describing circle R within the annular wheel P for the face curves of the teeth upon P, we may find some other circle that will give the same curve and be small enough to be rolled within the pinion Q for its teeth flanks. Thus in Fig. 67 P represents the pitch circle of the annular wheel and R the intermediate circle, and if R be rolled within P, a point on the circumference of R will trace the curve V W. But if we take the circle S, having a diameter equal to the difference between the diameter of R and that of P, and roll it within P, a point in its circumference will trace the same curve V W; hence S is a perfect substitute for R, and a portion of the curve V W may be used for the faces of the teeth on the annular wheel. The circle S being used for the pinion flanks, the wheel faces and pinion flanks will work correctly together, and as the circle S is rolled within the pinion for its flanks and within the wheel for its faces, it may be distinguished as the interior describing circle.

To prove the correctness of the construction it may be noted that with the particular diameter of intermediate describing circle used in Fig. 65, the interior and exterior describing circles are of equal diameters; hence, as the same diameter of describing circle is used for all the faces and flanks of the pair of wheels they will obviously work correctly together, in accordance with the rules laid down for spur gearing. The radius of S in Fig. 69 is equal to the radius of the annular wheel, less the radius of the intermediate circle, or the radius from A to C. The radius of the exterior describing circle T is the radius of the intermediate circle less the radius of the pinion, or radius C B in the figure.

Now the diameter of the intermediate circle may be determined at will, but cannot exceed that of the annular wheel or be less than the pinion. But having been selected between these two limits the interior and exterior describing circles derived from it give teeth that not only engage properly and avoid the interference shown in Fig. 62, but that will also have an additional arc of action during the recess, as is shown in Fig. 68, which represents the wheel and pinion shown in Fig. 62, but produced by means of the interior and exterior describing circles. Supposing the pinion to be the driver the arc of approach will be along the thickened arc of the interior describing circle, while during the arc of recess there will be an arc of contact along the dotted portion of the exterior describing circle as in ordinary gearing. But in addition there will be an arc of recess along the dotted portion of the intermediate circle R, which arc is due to the faces of the pinion acting upon the faces as well as upon the flanks of the wheel teeth. It is obvious from this that as soon as a tooth passes the line of centres it will, during a certain period, have two points of contact, one on the arc of the exterior describing circle, and another along the arc of R, this period continuing

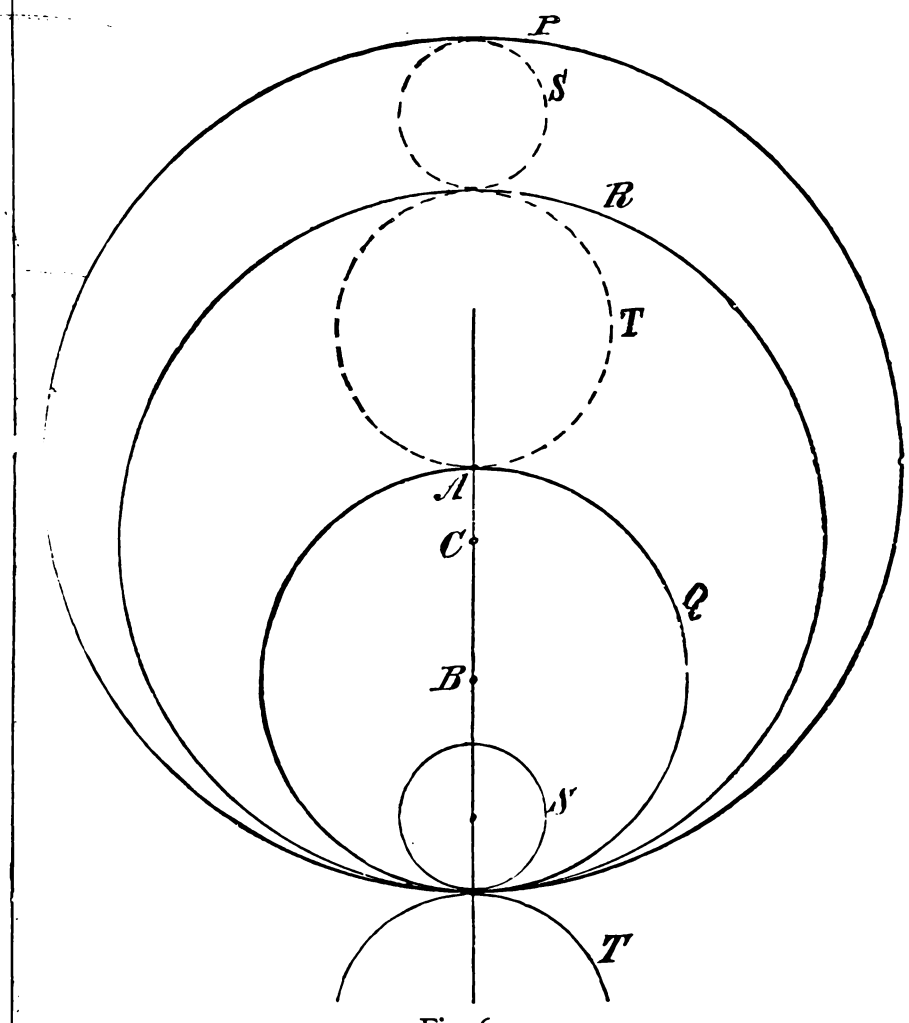

Fig. 69.

until the addendum circle of the pinion crosses the dotted arc of the exterior describing circle at Z.

The diameters of the interior and exterior describing circles obviously depend upon the diameter of the intermediate circle, and as this may, as already stated, be selected, within certain limits, at will, it is evident that the relative diameters of the

interior and exterior describing circles will vary in proportion, the interior becoming smaller and the exterior larger, while from the very mode of construction the radius of the two will equal that of the axes of the wheel and pinion. Thus in Fig. 69 the radii of S,T, equal A B, or the line of centres, and their diameters, therefore, equal the radius of the annular wheel, as is shown by dotting them in at the upper half of the figure. But after their diameters have been determined by this construction either of them may be decreased in diameter and the teeth of the wheels will clear (and not interfere as in Fig. 62), but the action will be the same as in ordinary gear, or in other words there will be no arc of action on the circle R. But S cannot be increased without correspondingly decreasing T, nor can T be increased without correspondingly decreasing S.

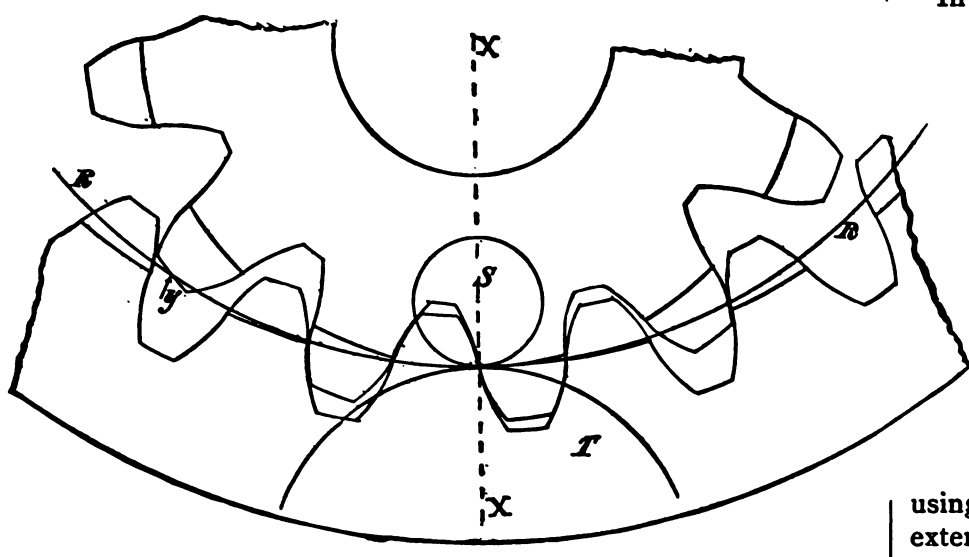

Fig. 70.

Fig. 70 shows the same pair of gears as in Fig. 68 (the wheel having 22 and the pinion 12 teeth), the diameter of the intermediate circle having been enlarged to decrease the diameter of S and increase that of T, and as these are left of the diameter derived from the construction there is receding action along R from the line of centres to T.

In Fig. 71 are represented a wheel and pinion, the pinion having but four teeth less than the wheel, and a tooth, J, being shown in position in which it has contact at two places. Thus at *k* it is in contact with the flank of a tooth on the annular wheel, while at L it is in contact with the face of the same tooth.

As the faces of the teeth on the wheel do not have contact higher than point *t*, it is obvious that instead of having them $\frac{3}{10}$ of the pitch as at the bottom of the figure, we may cut off the portion X without diminishing the arc of contact, leaving them formed as at the top of the figure. These faces being thus reduced in height we may correspondingly reduce the depth of flank on the pinion by filling in the portion G, leaving the teeth formed as at the top of the pinion. The teeth faces of the wheel being thus reduced we may, by using a sufficiently large intermediate circle, obtain interior and exterior describing circles that will form teeth that will permit of the pinion having but one tooth less than the wheel, or that will form a wheel having but one tooth more than the pinion.

The limits to the diameter of the intermediate describing circle are as follows: in Fig. 72 it is made equal in diameter to the pitch diameter of the pinion, hence B will represent the centre of the intermediate circle as well as of the pinion, and the pitch circle of the pinion will also represent the intermediate circle R. To obtain the radius for the interior describing circle we subtract the radius of the intermediate circle from the radius of the annular wheel, which gives A P, hence the pitch circle of the pinion also represents the interior circle R. But when we come to obtain the radius for the exterior describing circle (T), by sub-

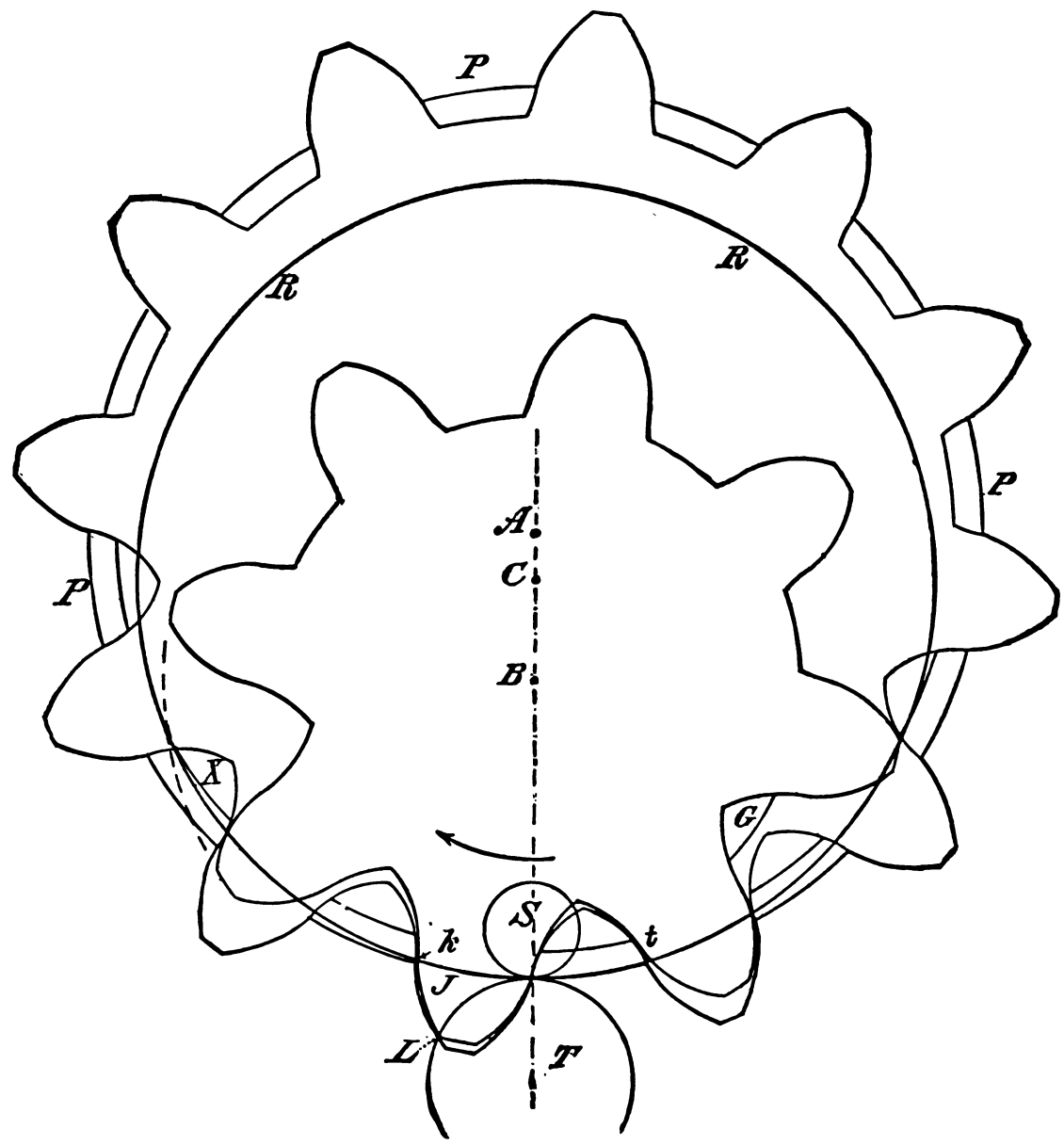

Fig. 71.

tracting the radius of the pinion from that of the intermediate circle, we find that the two being equal give O for the radius of (T), hence there could be no flanks on the pinion.

Now suppose that the intermediate circle be made equal in diameter to the pitch circle of the annular wheel, and we may

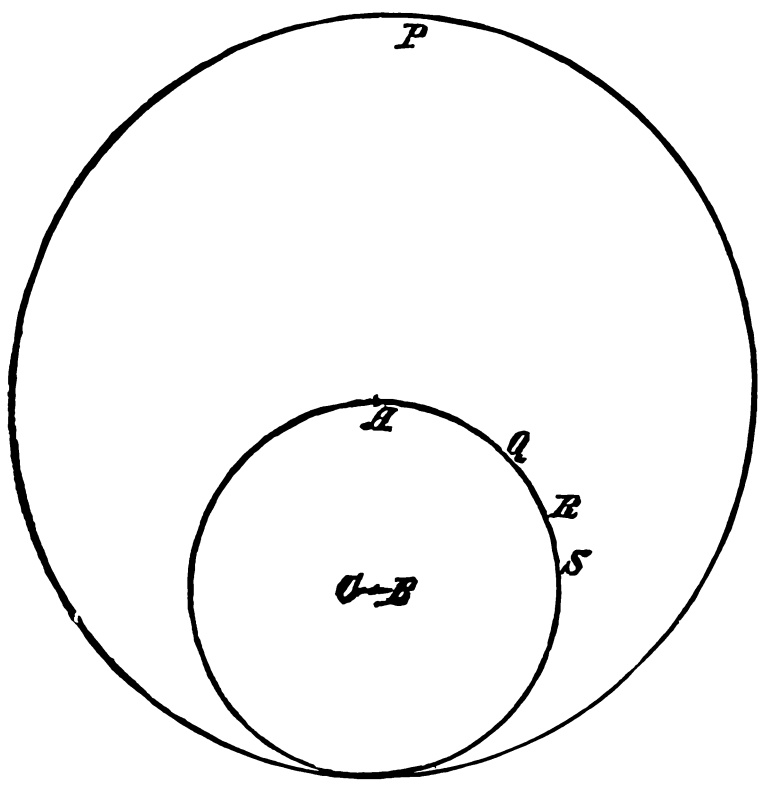

Fig. 72.

obtain the radius for the exterior describing circle T ; by subtracting the radius of the pinion from that of the intermediate circle, we shall obtain the radius A B ; hence the radius of (T) will equal that of the pinion. But when we come to obtain the radius for the interior describing circle by subtracting the radius of the intermediate circle from that of the annular wheel, we find these two to be equal; hence there would be no interior describing circle, and, therefore, no faces to the pinion.

The action of the teeth in internal wheels is less a sliding and more a rolling one than that in any other form of toothed gearing. This may be shown as follows : In Fig. 73 let A A represent the pitch circle of an external pinion, and B B that of an internal one, and P P the pitch circle of an external wheel for A A or an internal one for B B, the point of contact at the line of centres being at C, and the direction of rotation P P being as denoted by the arrow ; the two pinions being driven, we suppose a point at C, on the pitch circle P P, to be coincident with a point on each of the two pinions at the line of centres. If P P be rotated so as to bring this point to the position denoted by D, the point on the external pinion having moved to E, while that on the internal

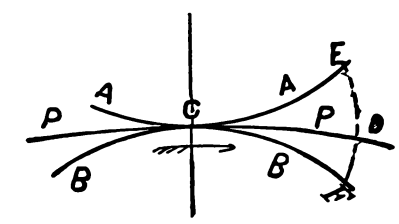

Fig. 73.

pinion has moved to F, both having moved through an arc equal to C D, then the distance from E to D being greater than from D to F, more sliding motion must have accompanied the contact of the teeth at the point E than at the point F ; and the difference in the length of the arc E D and that of F D, may be taken to represent the excess of sliding action for the teeth on E ; for whatever, under any given condition, the amount of sliding contact may be, it will be in the proportion of the length of E D to that of F D. Presuming, then, that the amount of power transmitted be equal for the two pinions, and the friction of all other things being equal—being in proportion to the space passed (or in this case slid) over—it is obvious that the internal pinion has the least friction.

Chapter II.—THE TEETH OF GEAR-WHEELS.—CAMS.

Wheel and Tangent Screw or Worm and Worm Gear.

In Fig. 74 are shown a worm and worm gear partly in section on the line of centres. The worm or tangent screw W is simply one long tooth wound around a cylinder, and its form may be

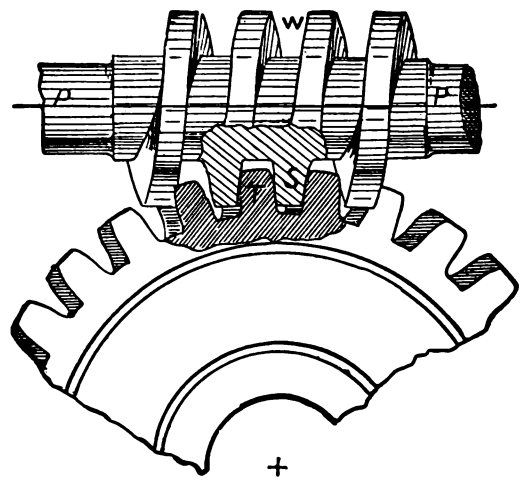

Fig. 74.

determined by the rules laid down for a rack and pinion, the tangent screw or worm being considered as a rack, and the wheel as an ordinary spur-wheel.

Worm gearing is employed for transmitting motion at a right angle, while greatly reducing the motion. Thus one rotation of the screw will rotate the wheel to the amount of the pitch of its teeth only. Worm gearing possesses the qualification that, unless of very coarse pitch, the worm locks the wheel in any position in which the two may come to a state of rest, while at the same time the excess of movement of the worm over that of the wheel enables the movement of the latter through a very minute portion of a revolution. And it is evident that, when the plane of rotation of the worm is at a right angle to that of the wheel, the contact of the teeth is wholly a sliding one. The wear of the worm is greater than that of the wheel, because its teeth are in continuous contact, whereas the wheel teeth are in contact only when passing through the angle of action.

If the teeth of the wheel are straight and are set at an angle equal to the angle of the worm thread to its axis, as in Fig. 75, P P representing the pitch line of the worm, *c d* the line of centres, and *d* the worm axis, the contact of tooth upon tooth will be at the centre only of the sides of the wheel teeth. It is generally preferred, however, to have the wheel teeth curved to envelop a part of the circumference of the worm, as in Fig. 1 (Plate I.), and increase the line of contact of tooth upon tooth, and thereby provide more ample wearing surface.

In this case the form of the teeth upon the worm wheel varies at every point in its length as the line of centres is departed from. Thus in Fig. 76 (Plate I.) is shown an end view of a worm and a worm gear in section, *c d* being the line of centres, and it will be readily perceived that the shape of the teeth, if taken on the line *e f*, will differ from that on the line of centres; hence the form of the wheel teeth must, if contact is to occur along the full length of the tooth, be conformed to fit to the worm, which may be done by taking a series of sections of the worm thread at varying distances from and parallel to the line of centres, and forming the wheel teeth to the shape so obtained. But if the teeth of the wheel are to be cut to shape, then obviously a worm may be provided with teeth, as shown in Fig. 3 (Plate I.), thus forming what is known as a hob, which is used as shown in Fig. 4 (Plate I.), in which A is the hob mounted on the shaft or arbor E. B is a blank worm wheel, which is shown mounted in a chuck in such a manner that it is free to revolve. C and D are gear wheels, the former (C) being fast upon the shaft E, and the latter (D) geared with E, while at the same time so arranged in connection with the chuck or spiral head gearing that the wheel B revolves at or during one complete revolution of A, a portion of a revolution equal to the pitch of the worm of the hob. It is obvious that friction disks might be used instead of gear wheels, the only essential being that there be no slip between them. Instead of using a continuous cutting worm or hob to produce the teeth on the wheel, a single cutter of the requisite tooth shape, but of the form of an ordinary milling machine cutter, may be used, providing that the mandril or arbor that drives it is set at the requisite angle to the plane of the face of the wheel to be cut.

This angle may be obtained by drawing a line equal in length to the worm circumference, and another line meeting it at one end and distant from it at the other end equal to the worm pitch. The pitch line of the wheel teeth, whether they be straight and are disposed at an angle, as in Fig. 75, or curved, as in Fig. 76, is at a right angle to the line of centres *c d*; or, in other words, in the plane of *g h* in Fig. 76. This is evident because the pitch line must be parallel to the wheel axis, being at an equal radius from that axis, and therefore having an equal velocity of rotation at every point in the length of the pitch line of the wheel teeth.

If we multiply the number of teeth by their pitch to obtain the circumference of the pitch circle, we shall obtain the circumference due to the radius of *g h* from the wheel axis; and so long as *g h* is parallel to the wheel axis, we shall by this means obtain the same diameter of pitch circle, so long as we measure it on a line

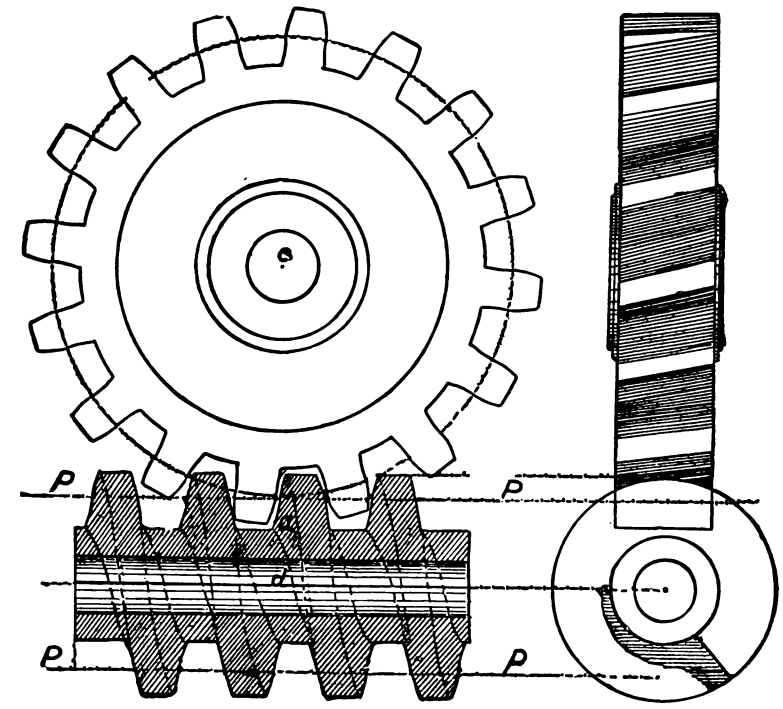

Fig. 75.

parallel to the line of centres *c d*. The pitch of the worm is the same at whatever point in the tooth depth it may be measured, because the teeth curves are parallel one to the other; thus in Fig. 77 the pitch measures are equal at *m*, *n*, or *o*.

But the action of the worm and wheel will nevertheless not be correct unless the pitch line from which the curves were rolled coincides with the pitch line of the wheel on the line of centres; for although, if the pitch lines do not so coincide, the worm will at each revolution move the pitch line of the wheel through a distance equal to the pitch of the worm, yet the motion of the wheel will not

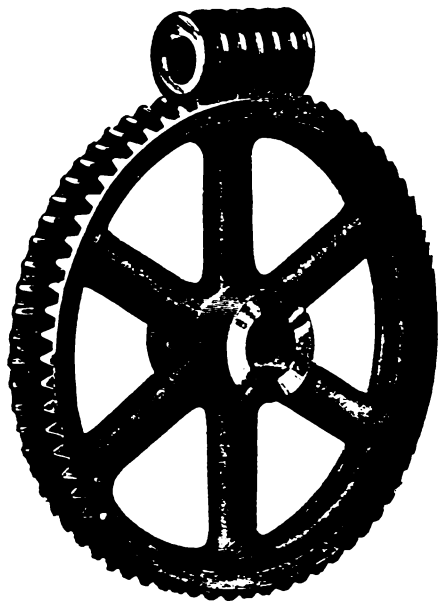

Fig. 1.

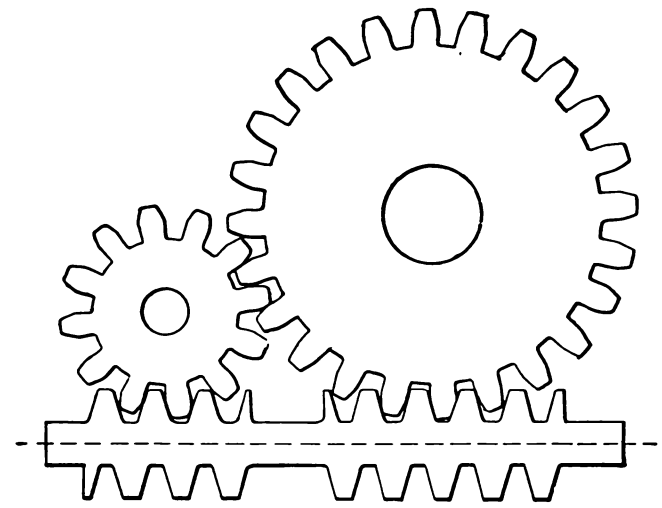

Fig. 2.

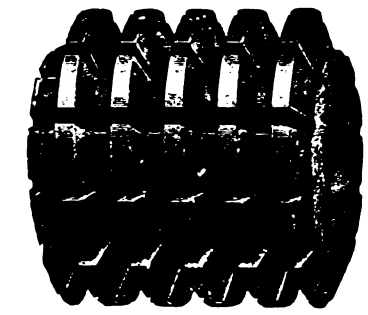

Fig. 3

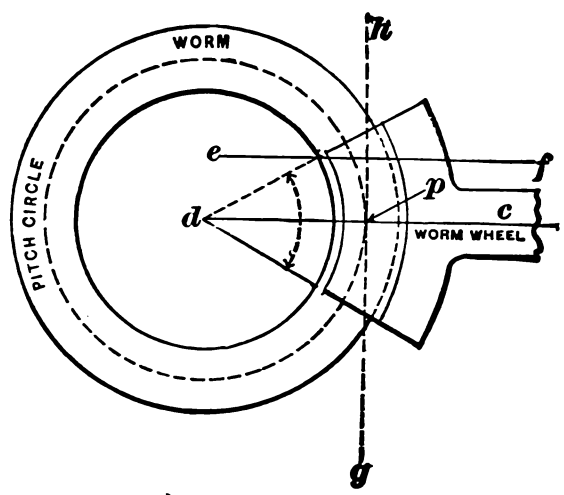

Fig. 76.

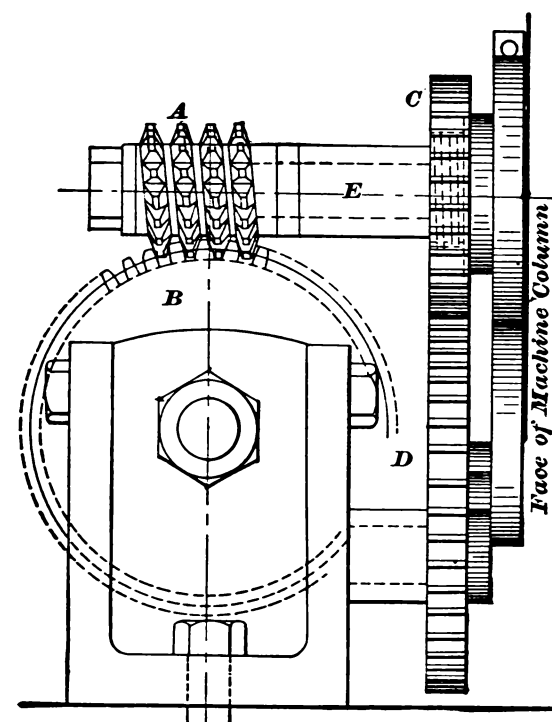

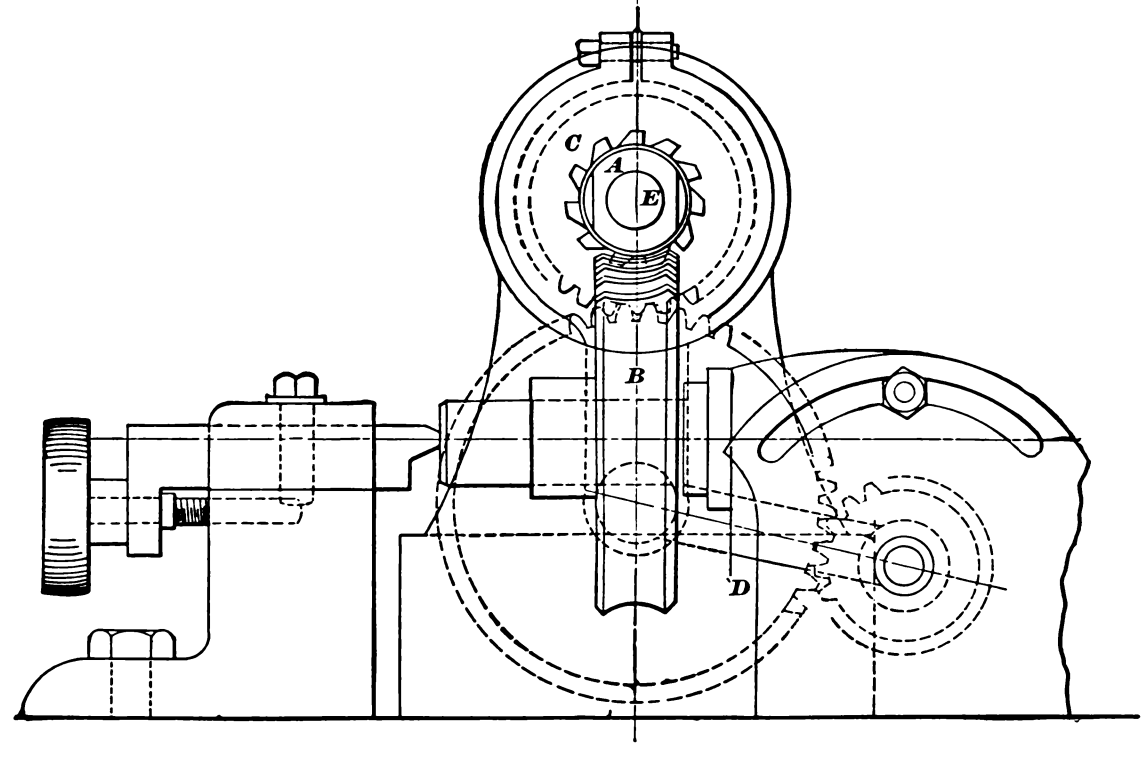

Fig. 4.

be uniform because, supposing the two pitch lines not to meet, the faces of the pinion teeth will act against those of the wheel, as shown in Fig. 78, instead of against their flanks, and as the faces are not formed to work correctly together the motion will be irregular.

The diameter of the worm is usually made equal to four times

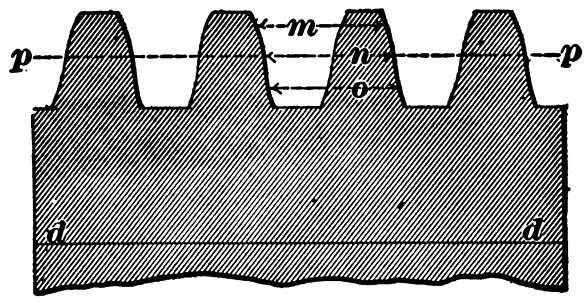

Fig. 77.

the pitch of the teeth, and if the teeth are curved as in figure 76 they are made to envelop not more than 30° of the worm.

The number of teeth in the wheel should not be less than thirty, a double worm being employed when a quicker ratio of wheel to worm motion is required.

When the teeth of the wheel are curved to partly envelop the worm circumference it has been found, from experiments made

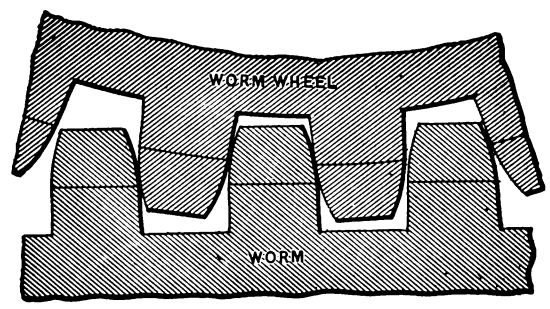

Fig. 78.

by Robert Briggs, that the worm and the wheel will be more durable, and will work with greatly diminished friction, if the pitch line of the worm be located to increase the length of face and diminish that of the flank, which will decrease the length of face and increase the length of flank on the wheel, as is shown

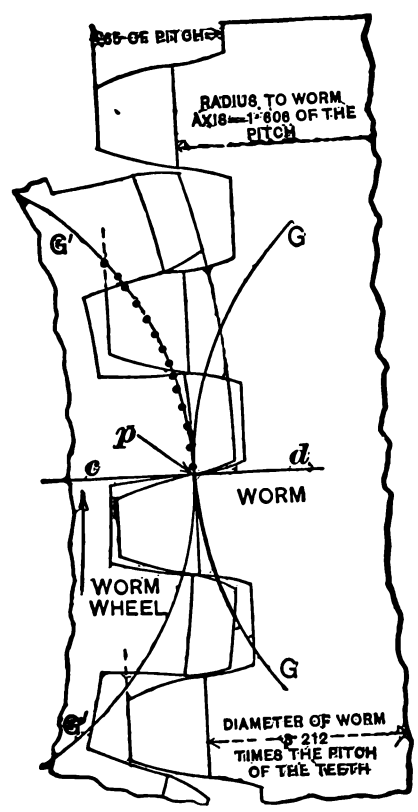

Fig. 79.

in Fig. 79; the location for the pitch line of the worm being determined as follows :—

The full radius of the worm is made equal to twice the pitch of its teeth, and the total depth of its teeth is made equal to ·65 of its pitch. The pitch line is then drawn at a radius of 1·606 of the pitch from the worm axis. The pitch line is thus determined in Fig. 76, with the result that the area of tooth face and of worm surface is equalized on the two sides of the pitch line in the figure. In addition to this, however, it may be observed that by thus locating the pitch line the arcs both of approach and of recess are altered. Thus in Fig. 80 is represented the same worm and wheel as in Fig. 79, but the pitch lines are here laid down as in ordinary gearing. In the two figures the arcs of approach are marked by the thickened part of the generating circle, while the arcs of recess are denoted by the dotted arc on the generating circle, and it is shown that increasing the worm face, as in Fig. 79, increases the arc of recess, while diminishing the worm flank diminishes the arc of approach, and the

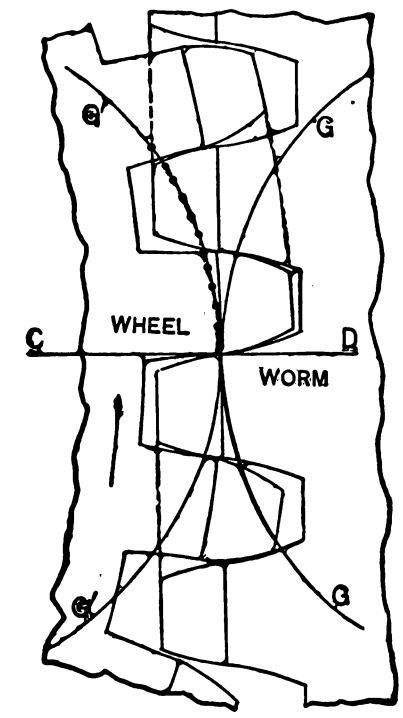

Fig. 80.

action of the worm is smoother because the worm exerts more pulling than pushing action, it being noted that the action of the worm on the wheel is a pushing one before reaching, and a pulling one after passing, the line of centres.

It may here be shown that a worm-wheel may be made to work correctly with a square thread. Suppose, for example, that the diameter of the generating circle be supposed to be infinite, and the sides of the thread may be accepted as rolled by the circle. On the wheel we roll a straight line, which gives a cycloidal curve suitable to work with the square thread. But the action will be confined to the points of the teeth, as is shown in Fig. 81, and also to the arc of approach. This is the same thing as taking the faces off the worm and filling in the flanks of the wheel.

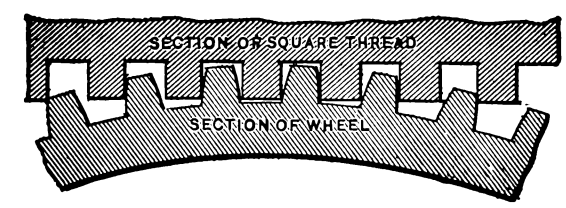

Fig. 81.

Obviously, then, we may reverse the process and give the worm faces only, and the wheel, flanks only, using such size of generating circle as will make the spaces of the wheel parallel in their depths and rolling the same generating circle upon the pitch line of the worm to obtain its face curve. This would enable the teeth on the wheel to be cut by a square-threaded tap, and would confine the contact of tooth upon tooth to the recess.

The diameter of generating circle used to roll the curves for a worm and worm-wheel should in all cases be larger than the radius of the worm-wheel, so that the flanks of the wheel teeth may be at least as thick at the root as they are at the pitch circle.

To find the diameter of a wheel, driven by a tangent-screw, which is required to make one revolution for a given number of turns of the screw, it is obvious, in the first place, that when the

screw is single-threaded, the number of teeth in the wheel must be equal to the number of turns of the screw. Consequently, the pitch being also given, the radius of the wheel will be found by multiplying the pitch by the number of turns of the screw during one turn of the wheel, and dividing the product by 6·28.

When a wheel pattern is to be made, the first consideration is the determination of the diameter to suit the required speed; the next is the pitch which the teeth ought to have, so that the wheel

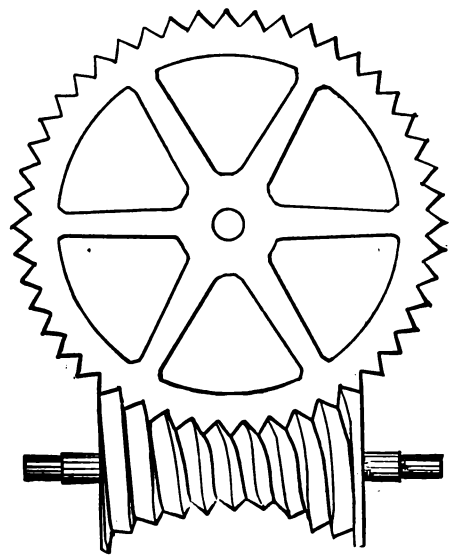

Fig. 82.

may be in accordance with the power which it is intended to transmit; the next, the number of the teeth in relation to the pitch and diameter; and, lastly, the proportions of the teeth, the clearance, length, and breadth.

When the amount of power to be transmitted is sufficient to cause excessive wear, or when the velocity is so great as to cause rapid wear, the worm instead of being made parallel in diameter

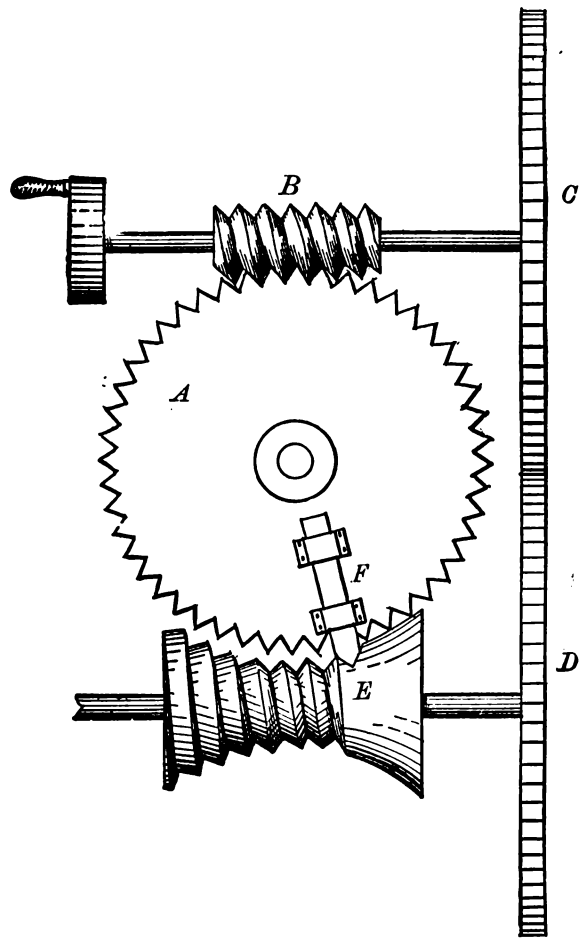

Fig. 83.

from end to end, is sometimes given a curvature equal to that of the worm-wheel, as is shown in Fig. 82.

The object of this design is to increase the bearing area, and thus, by causing the power transmitted to be spread over a larger area of contact, to diminish the wear. A mechanical means of cutting a worm to the required form for this arrangement is shown in Fig. 83, which is extracted from "Willis' Principles of Mechanism." "A is a wheel driven by an endless screw or worm-wheel, B, C is a toothed wheel fixed to the axis of the endless screw B and in gear with another and equal toothed gear D, upon whose axis is mounted the smooth surfaced solid E, which it is desired to cut into Hindleys'* endless screw. For this purpose a cutting tooth F is clamped to the face of the wheel A. When the handle attached to the axis of B C is turned round, the wheel A and solid wheel E will revolve with the same relative velocity as A and B, and the tool F will trace upon the surface of the solid E a thread which will correspond to the conditions. For from the very mode of its formation the section of every thread through the axis will

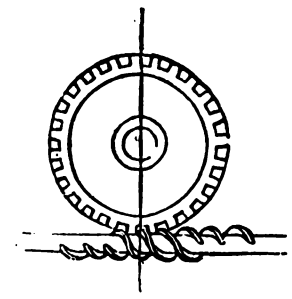

Fig. 84.

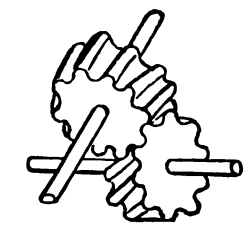

Fig. 85.

point to the centre of the wheel A. The axis of E lies considerably higher than that of B to enable the solid E to clear the wheel A.

"The edges of the section of the solid E along its horizontal centre line exactly fit the segment of the toothed wheel, but if a section be made by a plane parallel to this the teeth will no longer be equally divided as they are in the common screw, and therefore this kind of screw can only be in contact with each tooth along a line corresponding to its middle section. So that the advantage of this form over the common one is not so great as appears at first sight.

"If the inclination of the thread of a screw be very great, one or more intermediate threads may be added, as in Fig. 84, in which case the screw is said to be double or triple according to the number of separate spiral threads that are so placed upon its surface. As every one of these will pass its own wheel-tooth across the line of centres in each revolution of the screw, it follows that as many teeth of the wheel will pass that line during one revolution of the screw as there are threads to the screw. If we suppose the number of these threads to be considerable, for

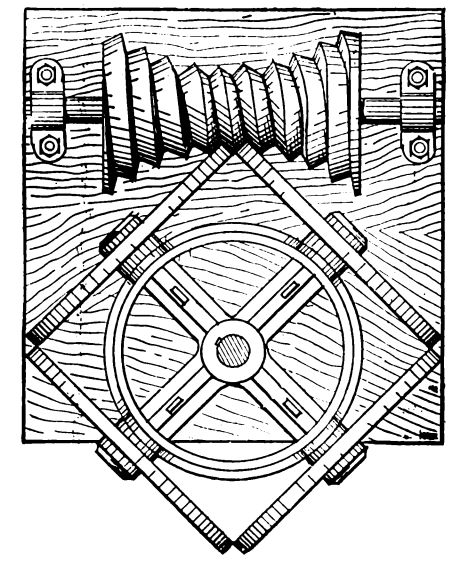

Fig. 86.

example, equal to those of the wheel teeth, then the screw and wheel may be made exactly alike, as in Fig. 85; which may serve as an example of the disguised forms which some common arrangements may assume."

In Fig. 86 is shown Hawkins's worm gearing. The object of this ingenious mechanical device is to transmit motion by means of screw or worm gearing, either by a screw in which the threads are of equal diameter throughout its length, or by a spiral worm, in which the threads are not of equal diameter throughout, but increase in diameter each way from the centre of its length, or

* The inventor of this form of endless screw.

about the centre of its length outwardly. Parallel screws are most applicable to this device when rectilinear motions are produced from circular motions of the driver, and spiral worms are applied when a circular motion is given by the driver, and imparted to the driven wheel. The threads of a spiral worm instead of gearing into teeth like those of an ordinary worm-wheel, actuate a series of rollers turning upon studs, which studs are attached to a wheel whose axis is not parallel to that of the worm, but placed at a suitable inclination thereto. When motion is given to the worm then rotation is produced in the roller wheel at a rate proportionable to the pitch of worm and diameter of wheel respectively.

In the arrangement for transmitting rectilinear motion from a screw, rollers may be employed whose axes are inclined to the axis of the driving screw, or else at right angles to or parallel to the same. When separate rollers are employed with inclined axes, or axes at right angles with that of the main driving screw, each thread in gear touches a roller at one part only; but when the rollers are employed with axes parallel to that of the driving screw a succession of grooves are turned in these rollers, into which the threads of the driving screw will be in gear throughout the entire length of the roller. These grooves may be separate and apart from each other, or else form a screw whose pitch is equal to that of the driving screw or some multiple thereof.

In Fig. 86 the spiral worm is made of such a length that the edge of one roller does not cease contact until the edge of the next comes into contact; a wheel carries four rollers which turn on studs, the latter being secured by cottars; the axis of the

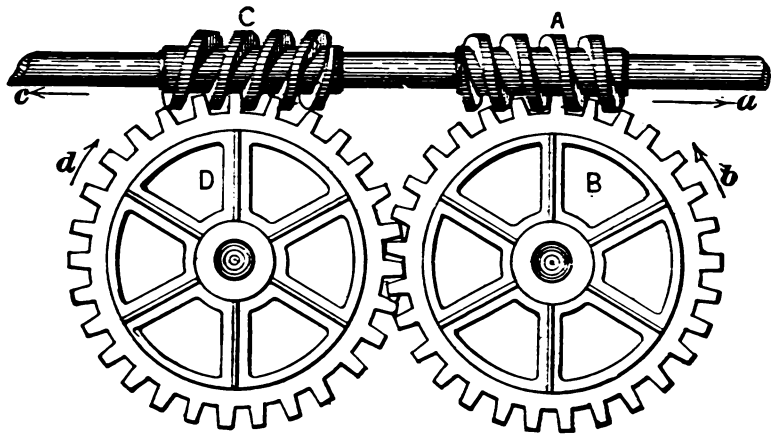

Fig. 87.

worm is at right angles with that of the wheel. The edges of the rollers come near together, leaving sufficient space for the thread of the worm to fit between any two contiguous rollers. The pitch line of the screw thread forms an arc of a circle, whose centre coincides with that of the wheel, therefore the thread will always bear fairly against the rollers and maintain rolling contact therewith during the whole of the time each roller is in gear, and by turning the screw in either direction the wheel will rotate.

To prevent end thrust on a worm shaft it may have a right-hand worm A, and a left-hand one C (Fig. 87), driving two wheels B and D which are in gear, and either of which may transmit the power. The thrust of the two worms A and C, being in opposite directions, one neutralizes the other, and it is obvious that as each revolution of the worm shaft moves both wheels to an amount equal to the pitch of the worms, the two wheels B D may be of varying diameters, as in Fig. 2 (Plate I.).

Involute teeth.—These are teeth having their whole operative surfaces formed of one continuous involute curve. The diameter of the generating circle being supposed as infinite, then a portion of its circumference may be represented by a straight line, such as A in Fig. 88, and if this straight line be made to roll upon the circumference of a circle, as shown, then the curve traced will be involute P. In practice, a piece of flat spring steel, such as a piece of clock spring, is used for tracing involutes. It may be of any length, but at one end it should be filed so as to leave a scribing point that will come close to the base circle or line, and have a short handle, as shown in Fig. 89, in which S represents the piece of spring, having the point P′, and the handle H. The operation is, to make a template for the base

circle, rest this template on drawing paper and mark a circle round its edge to represent on the paper the pitch circle, and to then bend the spring around the circle B, holding the point P′ in contact with the drawing paper, securing the other end of the piece of steel, so that it cannot slip upon B, and allowing the steel to unwind from the cylinder or circle B. The point P′ will mark the involute curve P. Another way to mark an involute is to use a piece of twine in place of the spring and a pencil instead of the tracing point; but this is not so accurate, unless, indeed, a piece

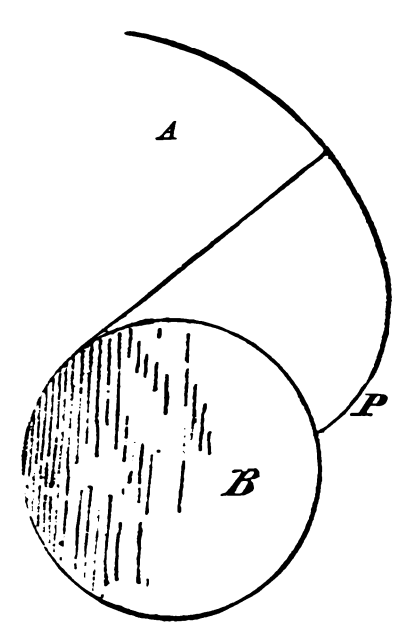

Fig. 88.

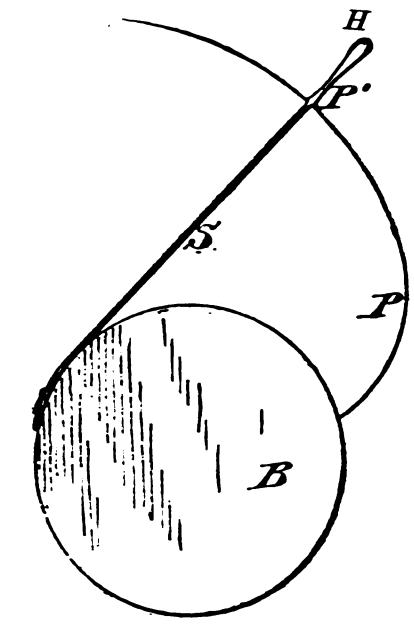

Fig. 89.

of wood be laid on the drawing-board and the pencil held firmly against it, so as to steady the pencil point and prevent the variation in the curve that would arise from variation in the vertical position of the pencil.

The flanks being composed of the same curve as the faces of the teeth, it is obvious that the circle from which the tracing point starts, or around which the straight line rolls, must be of less diameter than the pitch circle, or the teeth would have no flanks.

A circle of less diameter than the pitch circle of the wheel is, therefore, introduced, wherefrom to produce the involute curves forming the full side of the tooth.

The depth below pitch line or the length of flank is, therefore, the distance between the pitch circle and the base circle. Now

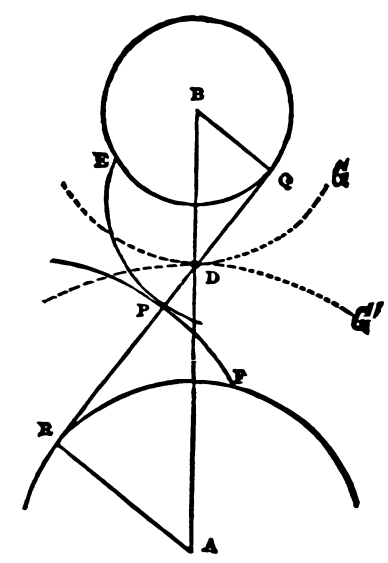

Fig. 90.

even supposing a straight line to be a portion of the circumference of a circle of infinite diameter or radius, the conditions would here appear to be imperfect, because the generating circle is not rolled upon the pitch circle but upon a circle of lesser diameter. But it can be shown that the requirements of a proper velocity ratio will be met, notwithstanding the employment of the base instead of the pitch circle. Thus, in Fig. 90, let A and B represent the respective centres of the two pitch circles, marked in dotted lines. Draw the base circle for B as E Q, which may be

of any radius less than that of the pitch circle of B. Draw the straight line Q D R touching this base circle at its perimeter and passing through the point of contact on the pitch circles as at D. Draw the circle whose radius is A R forming the base circle for wheel A. Thus the line R P Q will meet the perimeters of the two circles while passing through the point of contact D at the line of centres (a condition which the relative diameters of the base circles must always be so proportioned as to attain).

If now we take any point on R Q, as P in the figure, as a tracing point, and suppose the radius or distance P Q to represent the steel spring shown in Fig. 89, and move the tracing point back to the base circle of B, it will trace the involute E P. Again we may take the tracing point P (supposing the line P R to represent the steel spring), and trace the involute P F, and these two involutes represent each one side of the teeth on the respective wheels.

The line R P Q is at a right angle to the curves P E and P F, at their point of contact, and, therefore, fills the conditions referred to in Fig. 41. Now the line R P Q denotes the path of contact of tooth upon tooth as the wheels revolve; or, in other words, the point of contact between the side of a tooth on one wheel, and the side of a tooth on the other wheel, will always move along the line Q R, or upon a similar line passing through D, but meeting the base circles upon the opposite sides of the line of centres, and since line Q R always cuts the line of centres at the point of contact of the pitch circles, the conditions necessary to obtain a correct angular velocity are completely fulfilled. The velocity ratio is, therefore, as the length of B Q is to that of A R, or, what is the same thing, as the radius of the base circle of one wheel is to that of the other. It is to be observed that the line Q R will vary in its angle to the line of centres A B, according to the diameter of the base circle from which it is struck, and it becomes a consideration as to what is its most desirable angle to produce the least possible amount of thrust tending to separate the wheels, because this thrust (described in Fig. 39) tends to wear the journals and bearings carrying the wheel shafts, and thus to permit the pitch circles to separate. To avoid, as far as possible, this thrust the proportions between the diameters of the base circles D and E, Fig. 91, must be such that the line D E passes through the point of contact on the line of centres, as at C, while the angles of the straight line D E should be as nearly 90° to a radial line, meeting it from the centres of the wheels (as shown in the figure, by the lines B E and D E), as is consistent with the length of D E, which in order to impart continuous motion must at least equal the pitch of the teeth. It is obvious, also, that, to give continuous motion, the length of D E must be more than the pitch in proportion, as the points of the teeth come short of passing through the base circles at D and E, as denoted by the dotted arcs, which should therefore represent the addendum circles. The least possible obliquity, or angle of D E, will be when the construction under any given conditions be made such by trial, that the base circles D and E coincide with the addendum circles on the line of centres, and thus, with a given depth of both beyond, the pitch circle, or addenda as it is termed, will cause the tooth contacts to extend over the greatest attainable length of line between the limits of the addendum circles, thus giving a maximum number of teeth in contact at any instant of time. These conditions are fulfilled in Fig. 92,* the addendum on the small wheel being longer than the depth below pitch line, while the faces of the teeth are the narrowest.

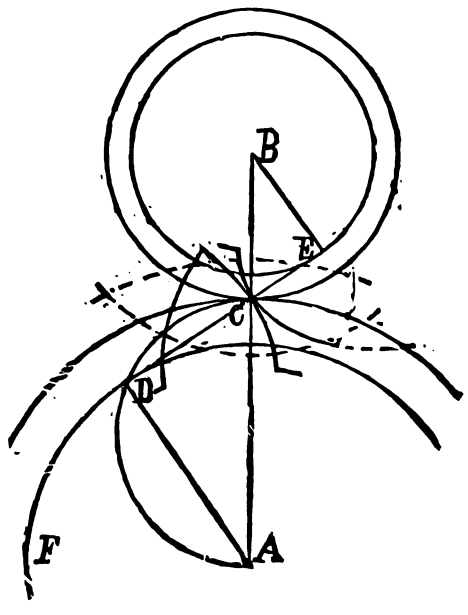

Fig. 91.

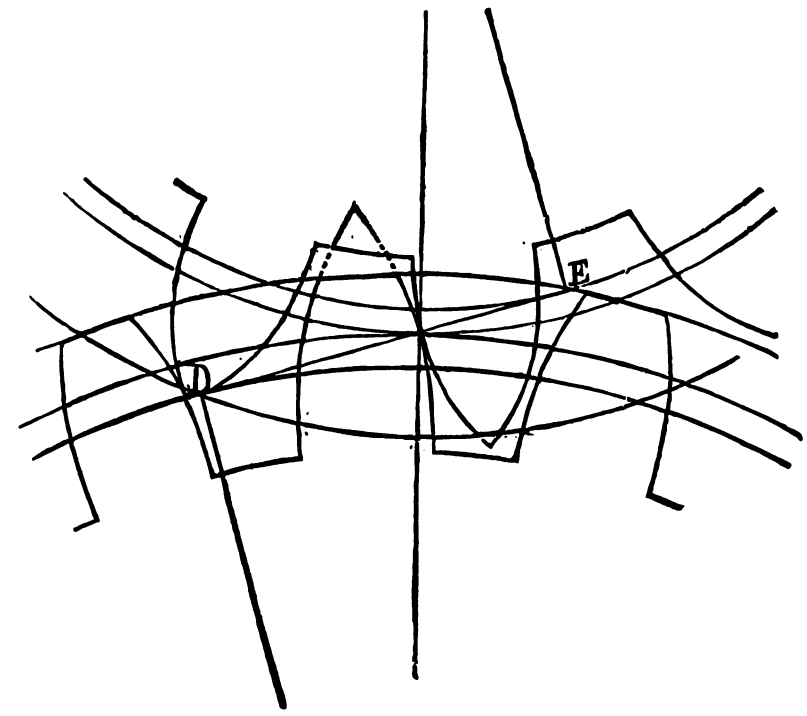

Fig. 92.

In seeking the minimum obliquity or angle of D E in the figure, it is to be observed that the less it is, the nearer the base circle approaches the pitch circle; hence, the shorter the operative length of tooth flank and the greater its wear.

In comparing the merits of involute with those of epicycloidal teeth, the direction of the line of pressure at each point of contact must always be the common perpendicular to the surfaces at the point of contact, and these perpendiculars or normals must pass through the pitch circles on the line of centres, as was shown in Fig. 41, and it follows that a line drawn from C (Fig. 91) to any point of contact, is in the direction of the pressure on the surfaces at that point of contact. In involute teeth, the contact will always be on the line D E (Fig. 92), but in epicycloidal, on the line of the generating circle, when that circle is tangent at the line of centres; hence, the direction of pressure will be a chord of the circle drawn from the pitch circle at the line of centres to the position of contact considered. Comparing involute with radial flanked epicycloidal teeth, let C D A (Fig. 91) represent the rolling circle for the latter, and D C will be the direction of pressure for the contact at D; but for point of contact nearer C, the direction will be much nearer 90°, reaching that angle as the point of contact approaches C. Now, D is the most remote legitimate contact for involute teeth (and considering it so far as epicycloidal struck with a generating circle of infinite diameter), we find that the aggregate directions of the pressures of the teeth upon each other is much nearer perpendicular in epicycloidal, than in involute gearing; hence, the latter exert a greater pressure, tending to force the wheels apart. Hence, the former are, in this respect, preferable.

It is to be observed, however, that in some experiments made by Mr. Hawkins, he states that he found "no tendency to press the wheels apart, which tendency would exist if the angle of the line D E (Fig. 92) deviated more than 20° from the line of centres A B of the two wheels."

A method commonly employed in practice to strike the curves of involute teeth, is as follows:—

In Fig. 93 let C represent the centre of a wheel, D D the full diameter, P P the pitch circle, and E the circle of the roots of the

* From an article by Prof. Robinson.

teeth, while R is a radial line. Divide on R, the distance between the pitch circle and the wheel centre, into four equal parts, by 1, 2, 3, &c. From point or division 2, as a centre, describe the semicircle S, cutting the wheel centre and the pitch circle at its junction with R (as at A). From A, with compasses set to the length of one of the parts, as A 3, describe the arc B, cutting S at F, and F will be the centre from which one side of the tooth may be struck; hence from F as a centre, with the compasses set

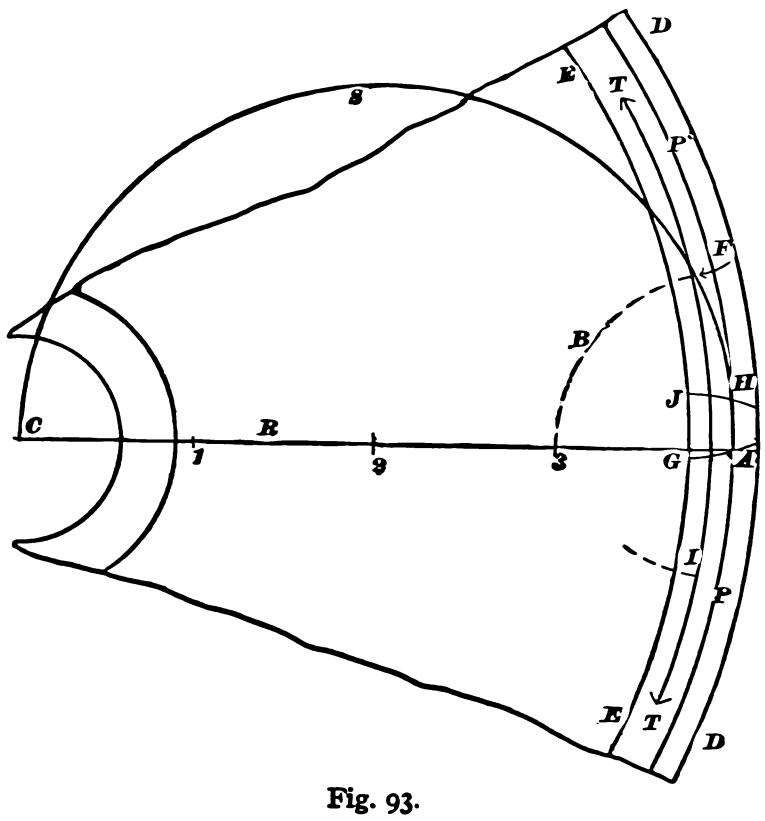

Fig. 93.

to the radius A B, mark the curve G. From the centre C strike, through F, a circle T T, and the centres wherefrom to strike all the teeth curves will fall on T T. Thus, to strike the other curve of the tooth, mark off from A the thickness of the tooth on the pitch circle P P, producing the point H. From H as a centre (with the same radius as before,) mark on T T the point I, and from I, as a centre, mark the curve J, forming the other side of the tooth.

In Fig. 94 the process is shown carried out for several teeth. On the pitch circle P P, divisions 1, 2, 3, 4, &c., for the thick-

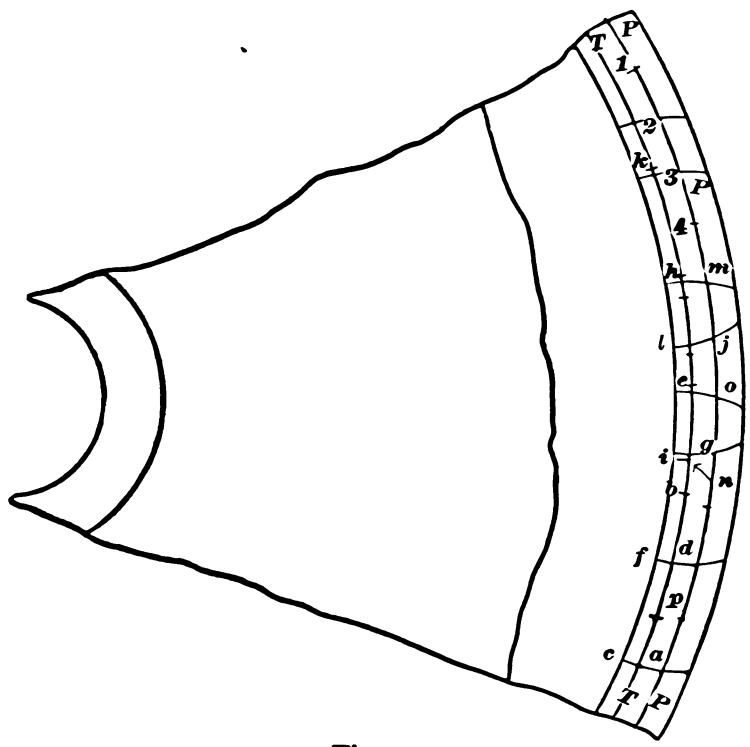

Fig. 94.

ness of teeth and the width of the spaces are marked. The compasses are set to the radius by the construction shown in Fig. 93, then from *a*, the point *b* on T is marked, and from *b* the curve *c* is struck.

In like manner, from *d*, *g*, *j*, the centres *e*, *h*, *k*, wherefrom to strike the respective curves, *f*, *i*, *l*, are obtained.

Then from *m* the point *n*, on T T, is marked, giving the centre wherefrom to strike the curve at *h m*, and from *o* is obtained the point *p*, on T T, serving as a centre for the curve *e o*.

A more simple method of finding point F is to make a sheet metal template, C, as in Fig. 95, its edges being at an angle one to the other of 75° and 30′. One of its edges is marked off in quarters of an inch, as 1, 2, 3, 4, &c. Place one of its edges coincident with the line R, its point touching the pitch circle at the side of a tooth, as at A, and the centre for marking the curve on that side of the tooth will be found on the graduated edge at a distance from A equal to one-fourth the length of R.

The result obtained in this process is precisely the same as that by the construction in Fig. 93, as will be plainly seen, because there are marked on Fig. 93 all the circles by which point F was arrived at in Fig. 95; and line 3, which in Fig. 95 gives the centre wherefrom to strike curve *o*, is coincident with point F, as is shown in Fig. 95. By marking the graduated edge of C in quarter-inch divisions, as 1, 2, 3, &c., then every division will represent the distance from A for the centre for every inch of wheel radius. Suppose, for example, that a wheel has 3 inches radius, then with the scale C set to the radial line R, the centre therefrom to strike the curve *o* will be at 3; were the radius of the wheel 4 inches, then the scale being set the same as before (one edge coincident with R), the centre for the curve *o* would be at 4, and arc T would require to meet the edge of C at 4. Having found

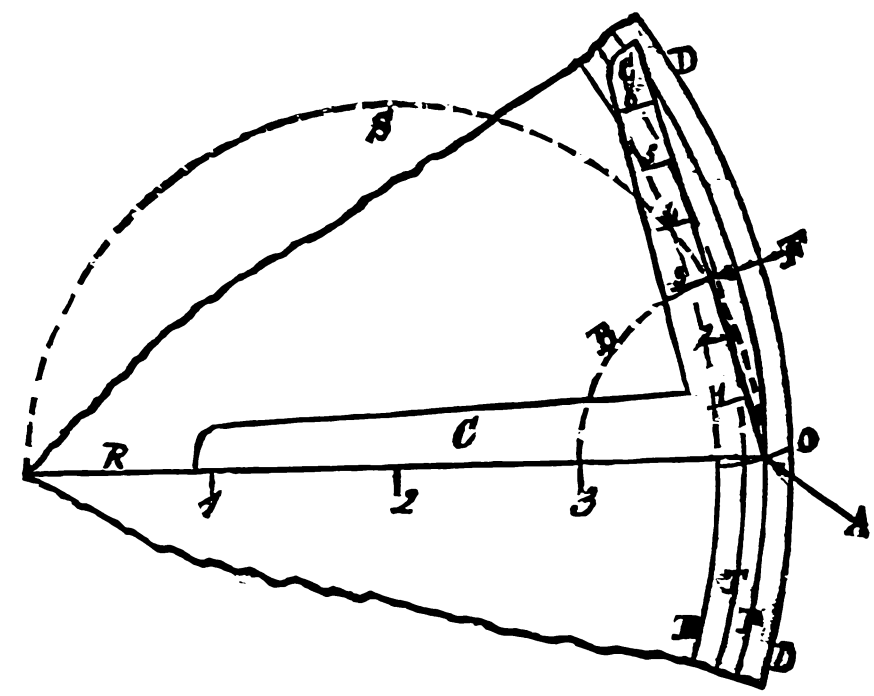

Fig. 95.

the radius from the centre of the wheel of point F for one tooth, we may mark circle T, cutting point F, and mark off all the teeth by setting one point of the compasses (set to radius A F) on one side of the tooth and marking on circle T the centre wherefrom to mark the curve (as *o*), continuing the process all around the wheel and on both sides of the tooth.

This operation of finding the location for the centre wherefrom to strike the tooth curves, must be performed separately for each wheel, because the distance or radius of the tooth curves varies with the radius of each wheel.

In Fig. 96 this template is shown with all the lines necessary to set it, those shown in Fig. 95 to show the identity of its results with those given in Fig. 93 being omitted.

The principles involved in the construction of a rack to work correctly with a wheel or pinion, having involute teeth, are as in Fig. 97, in which the pitch circle is shown by a dotted circle and the base circle by a full line circle. Now the diameter of the base circle has been shown to be arbitrary, but being assumed the radius B Q will be determined (since it extends from the centre B to the point of contact of D Q, with the base circle); B D is a straight line from the centre B of the pinion to the pitch line of the rack, and (whatever the angle of Q D to B D) the sides of the rack teeth must be straight lines inclined to the pitch line of the rack at an angle equal to that of B D Q.

Involute teeth possess four great advantages—1st, they are

thickest at the roots, where they should be to have a maximum of strength, which is of great importance in pinions transmitting much power; 2nd, the action of the teeth will remain practically perfect, even though the wheels are spread apart so that the pitch circles do not meet on the line of centres; 3rd, they are much easier to mark, and truth in the marking is easier attained; and 4th, they are much easier to cut, because the full depth of the teeth can, on spur-wheels, in all cases be cut with one revolving cutter, and at one passage of the cutter, if there is sufficient power to drive it, which is not the case with epicycloidal teeth whenever the flank space is wider below than it is at the pitch

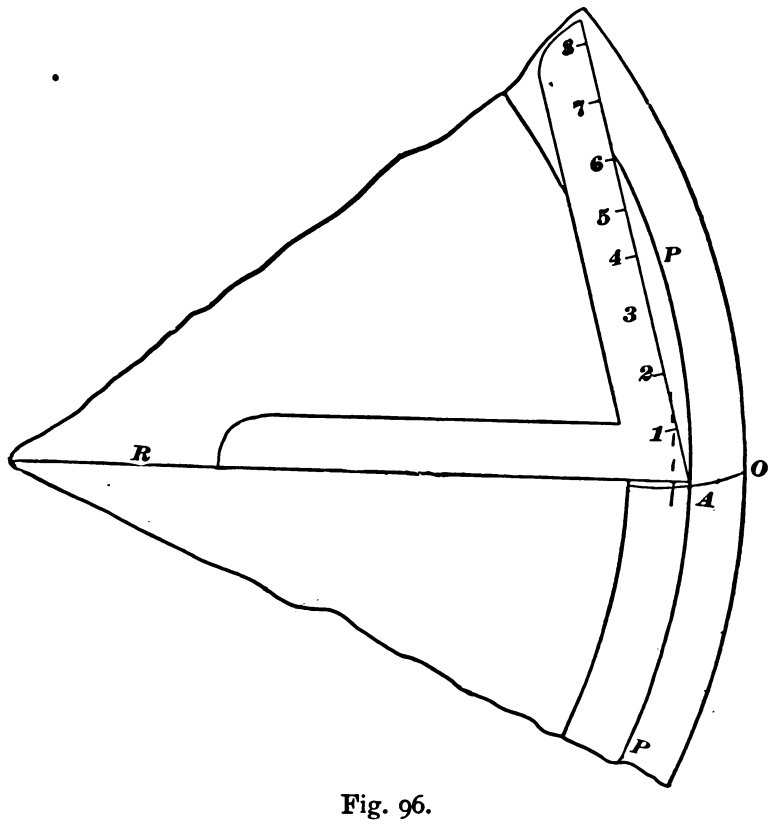

Fig. 96.

circle. On account of the first-named advantage, they are largely employed upon small gears, having their teeth cut true in a gear-cutting machine; while on account of the second advantage, interchangeable wheels, which are merely required to transmit motion, may be put in gear without a fine adjustment of the pitch circle, in which case the wear of the teeth will not prove destructive to the curves of the teeth. Another advantage is, that a greater number of teeth of equal strength may be given to a wheel than in the epicycloidal form, for with the latter the space must at least equal the thickness of the tooth, while in involute the space may be considerably less in width than the tooth, both measured,

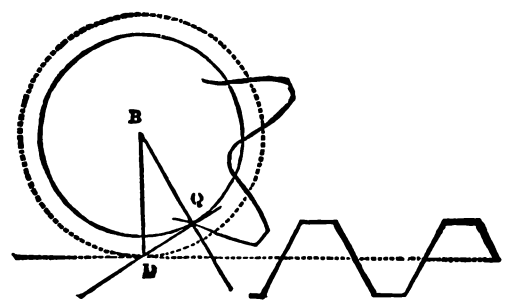

Fig. 97.

of course, at the pitch circle. There are also more teeth in contact at the same time; hence, the strain is distributed over more teeth.

These advantages assume increased value from the following considerations.

In a train of epicycloidal gearing in which the pinion or smallest wheel has radial flanks, the flanks of the teeth will become spread as the diameters of the wheels in the train increase. Coincident with spread at the roots is the thrust shown with reference to Fig. 39, hence under the most favorable conditions the wear on the journals of the wheel axles and the bearings containing them will take place, and the pitch circles will separate. Now so soon as this separation takes place, the motion of the wheels will not be as uniformly equal as when the pitch circles were in contact on the line of centres, because the conditions under which the tooth curves, necessary to produce a uniform velocity of motion, were formed, will have become altered, and the value of those curves to produce constant regularity of motion will have become impaired in proportion as the pitch circles have separated.

In a single pair of epicycloidal wheels in which the flanks of the teeth are radial, the conditions are more favorable, but in this case the pinion teeth will be weaker than if of involute form, while the wear of the journals and bearings (which will take place to some extent) will have the injurious effect already stated, whereas in involute teeth, as has been noted, the separation of the pitch circles does not affect the uniformity of the motion or the correct working of the teeth.

If the teeth of wheels are to be cut to shape in a gear-cutting machine, either the cutters employed determine from their shapes the shapes or curves of the teeth, or else the cutting tool is so guided to the work that the curves are determined by the operations of the machine. In either case nothing is left to the machine operator but to select the proper tools and set them, and the work in proper position in the machine. But when the teeth are to be cast upon the wheel the pattern wherefrom the wheel is to be moulded must have the teeth proportioned and shaped to proper curve and form.

Wheels that require to run without noise or jar, and to have uniformity of motion, must be finished in gear-cutting machines, because it is impracticable to cast true wheels.

When the teeth are to be cast upon the wheels the pattern-maker makes templates of the tooth curves (by some one of the methods to be hereafter described), and carefully cuts the teeth to shape. But the production of these templates is a tedious and costly operation, and one which is very liable to error unless much experience has been had. The Pratt and Whitney Company have, however, produced a machine that will produce templates of far greater accuracy than can be made by hand work. These templates are in metal, and for epicycloidal teeth from 15 to a rack, and having a diametral pitch ranging from $1\frac{1}{2}$ to 32.

The principles of action of the machine are that a segment of a ring (representing a portion of the pitch circle of the wheel for whose teeth a template is to be produced) is fixed to the frame of the machine. Upon this ring rolls a disk representing the rolling, generating, or describing circle, this disk being carried by a frame mounted upon an arm representing the radius of the wheel, and therefore pivoted at a point central to the ring. The describing disk is rolled upon the ring describing the epicycloidal curve, and by suitable mechanical devices this curve is cut upon a piece of steel, thus producing a template by actually rolling the generating upon the base circle, and the rolling motion being produced by positive mechanical motion, there cannot possibly be any slip, hence the curves so produced are true epicycloids.

The general construction of the machine is shown in the side view, Fig. 98 (Plate II.), and top view, Fig. 99 (Plate II,) details of construction being shown in Figs. 100, 101 (Plate II.), 102, 103, 104, 105, and 106. A A is the segment of a ring whose outer edge represents a part of the pitch circle. B is a disk representing the rolling or generating circle carried by the frame C, which is attached to a rod pivoted at D. The axis of pivot D represents the axis of the base circle or pitch circle of the wheel, and D is adjustable along the rod to suit the radius of A A, or what is the same thing, to equal the radius of the wheel for whose teeth a template is to be produced.

When the frame C is moved its centre or axis of motion is therefore at D and its path of motion is around the circumference of A A, upon the edge of which it rolls. To prevent B from slipping instead of rolling upon A A, a flexible steel ribbon is fastened at one end upon A A, passes around the edge of A A and thence around the circumference of B, where its other end is fastened; due allowance for the thickness of this ribbon being made in adjusting the radii of A A and of B.

E′ is a tubular pivot or stud fixed on the centre line of pivots E and D, and distant from the edge of A A to the same amount that E is. These two studs E and E′ carry two worm-wheels F and F′ in Fig. 102, which stand above A and B, so that the axis of the worm G

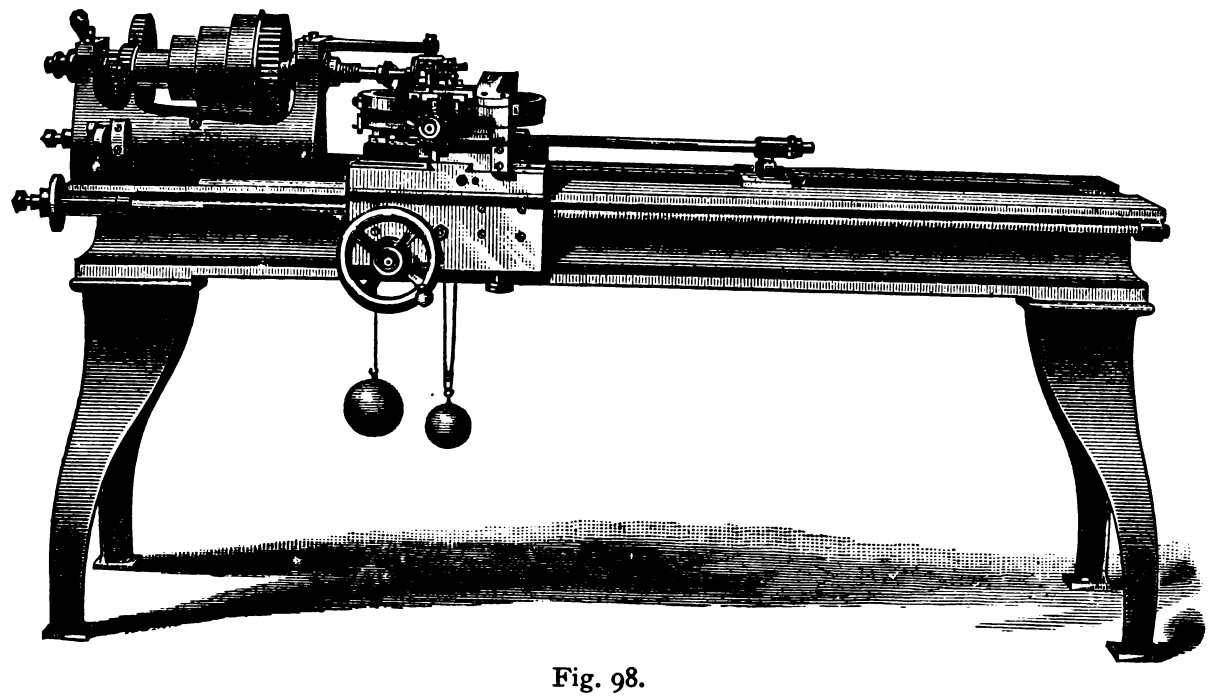

Fig. 98.

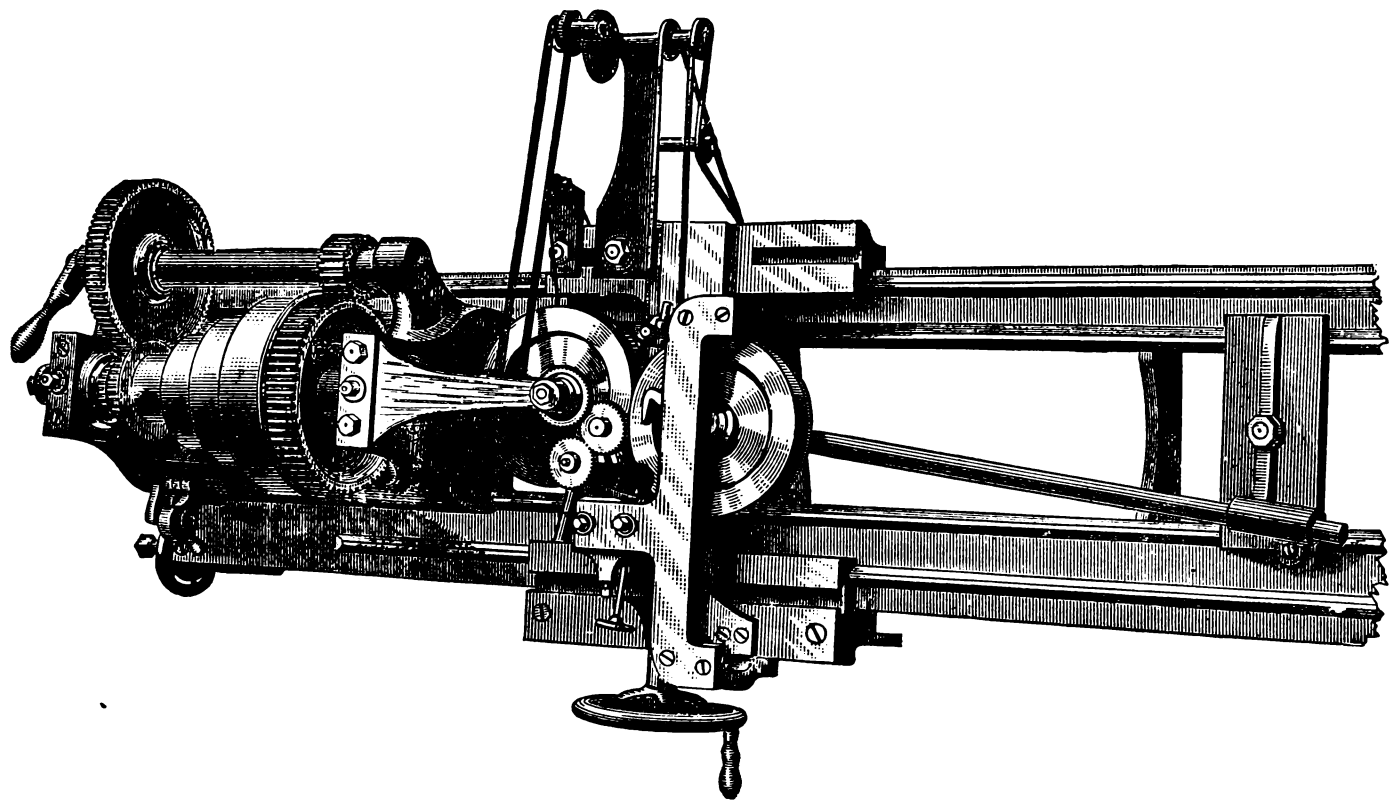

Fig. 99.

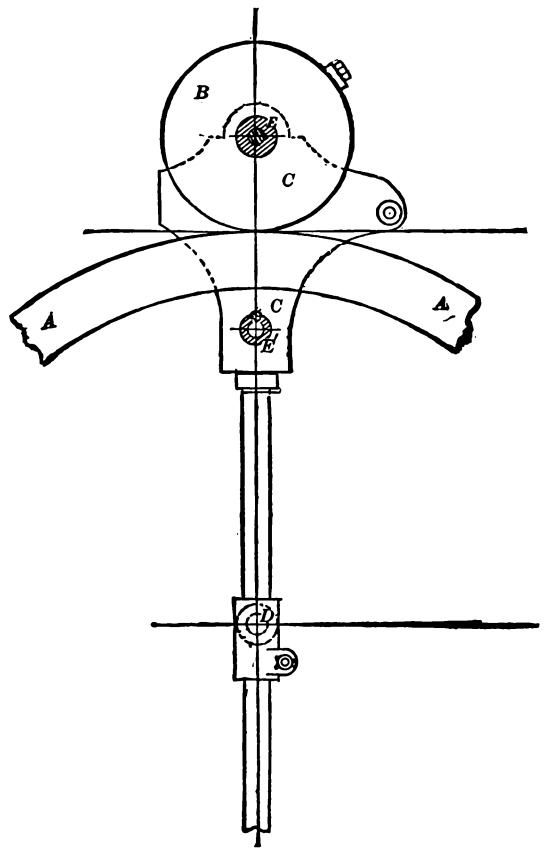

Fig. 100.

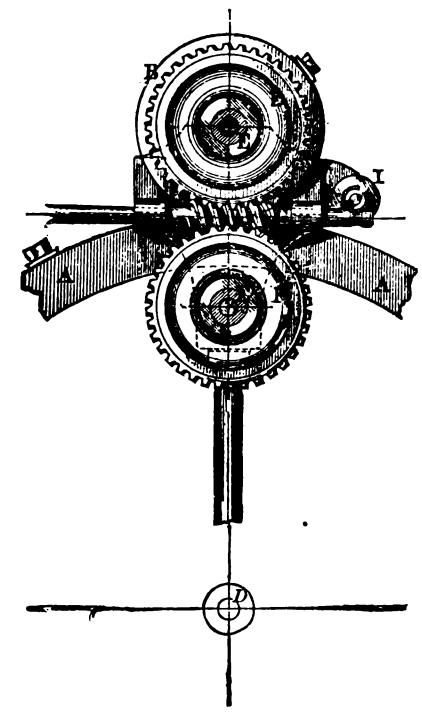

Fig. 101.

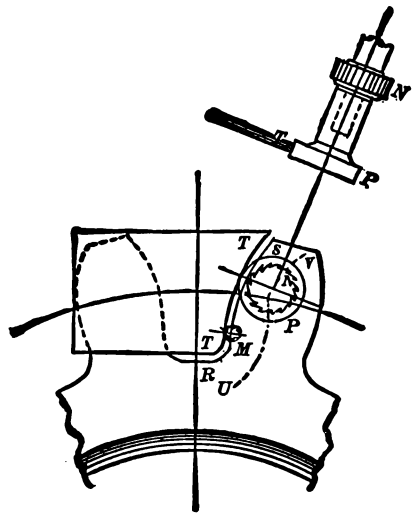

Fig. 106.

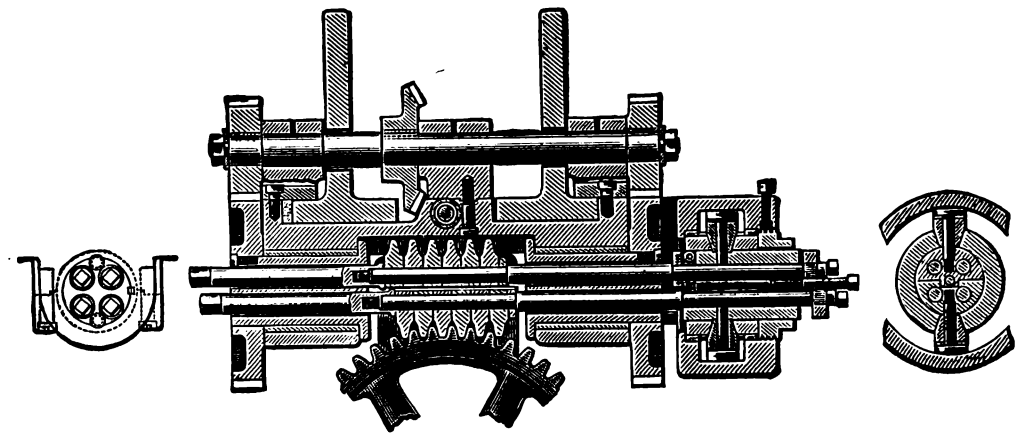

Fig. 4.

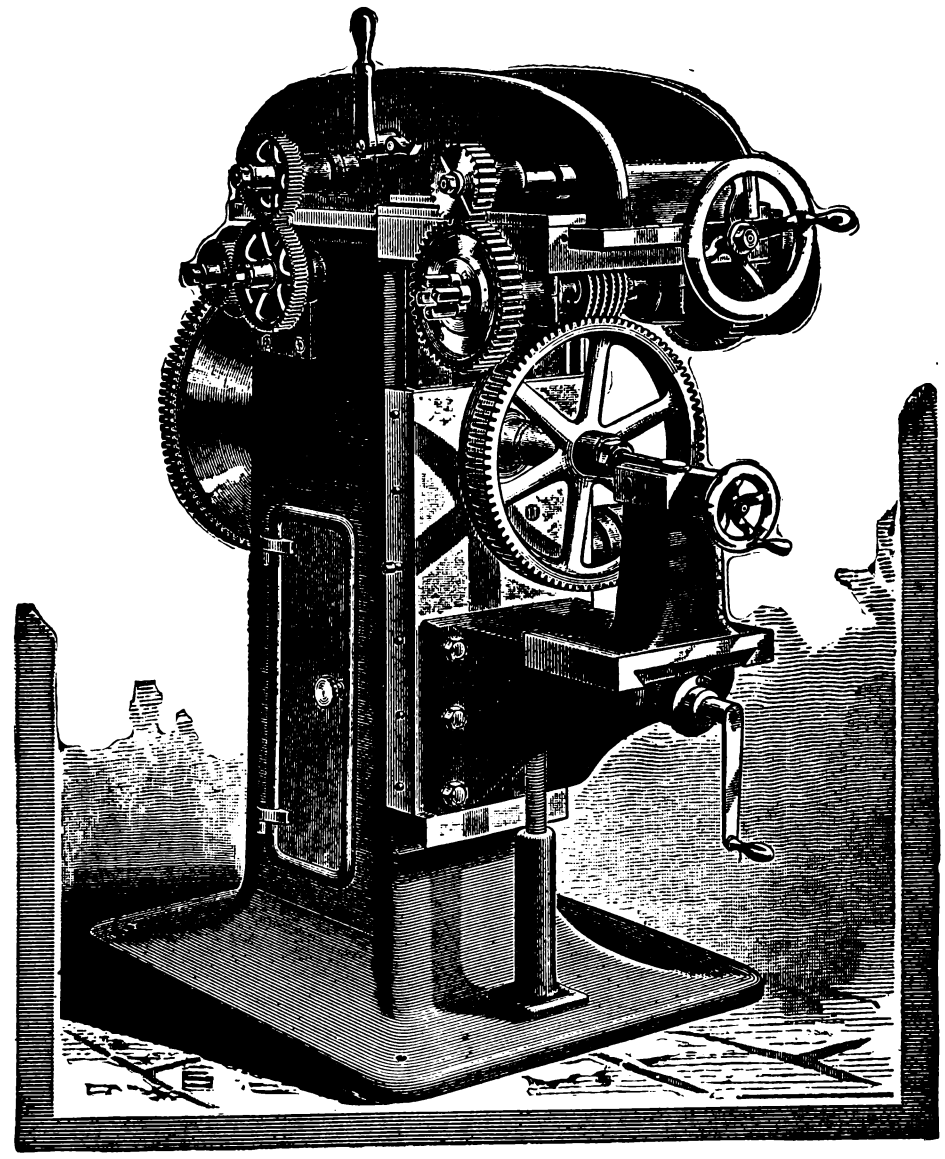

Fig. 1.

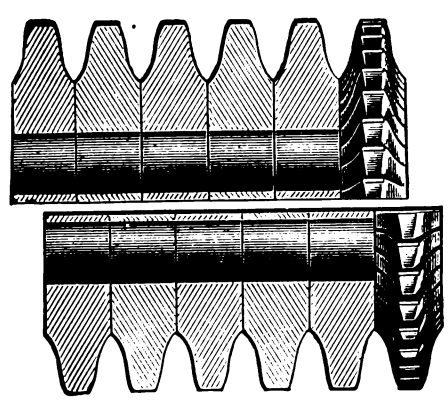

Fig. 2.

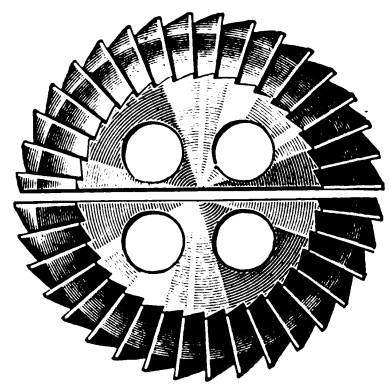

Fig. 3.

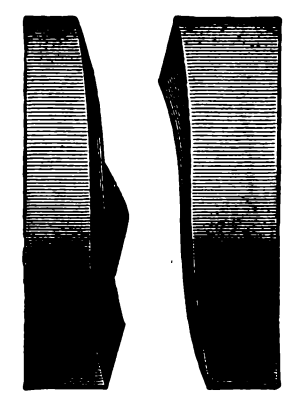

Fig. 5.

is vertically over the common tangent of the pitch and describing circles.

The relative positions of these and other parts will be most clearly seen by a study of the vertical section, Fig. 102.* The worm G is supported in bearings secured to the carrier C and is driven by another small worm turned by the pulley I, as seen in Fig. 101 (Plate II.); the driving cord, passing through suitable

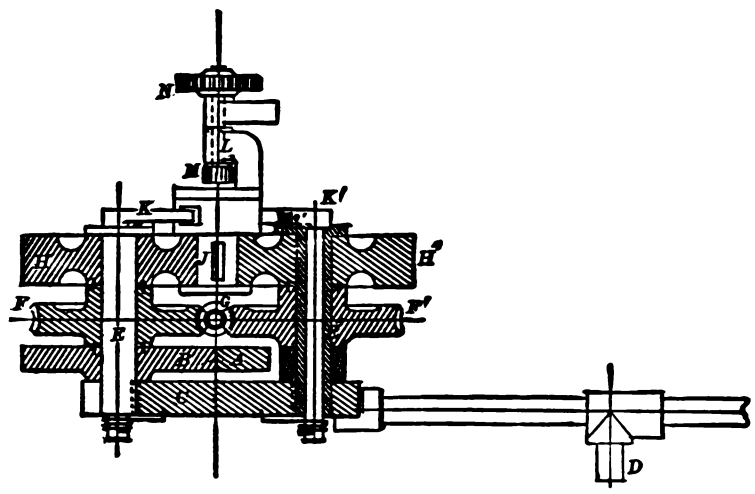

Fig. 102.

guiding pulleys, is kept at uniform tension by a weight, however C moves; this is shown in Figs. 98 and 99 (Plate II.).

Upon the same studs, in a plane still higher than the worm-wheels, turn the two disks H, H', Figs. 103, 104, 105. The diameters of these are equal, and precisely the same as those of the describing circles which they represent, with due allowance, again, for the thickness of a steel ribbon, by which these also are connected. It will be understood that each of these disks is secured to the worm-wheel below it, and the outer one of these, to the disk B, so that as the worm G turns, H and H' are rotated in opposite directions, the motion of H being identical with that of B; this last is a rolling one upon the edge of A, the carrier C with all its attached mechanism moving around D at the same time.

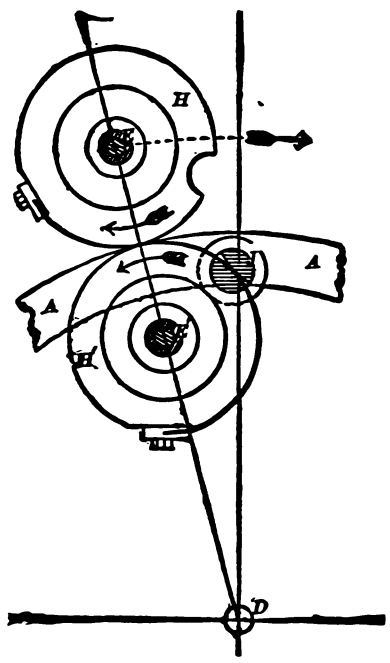

Fig. 103.

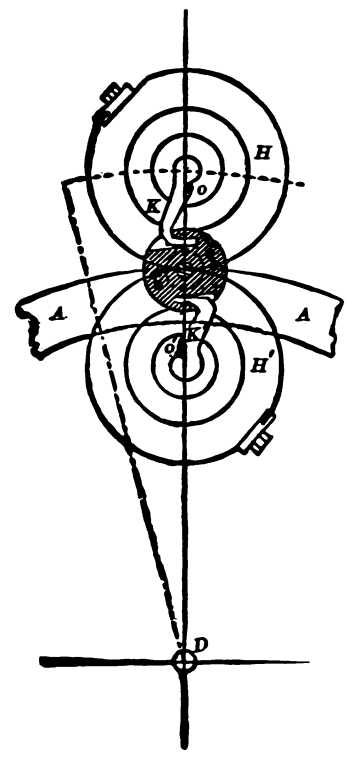

Fig. 104.

Ultimately, then, the motions of H, H', are those of two equal describing circles rolling in external and internal contact with a fixed pitch circle.

In the edge of each disk a semicircular recess is formed, into which is accurately fitted a cylinder J, provided with flanges, between which the disks fit so as to prevent end play. This cylinder is perforated for the passage of the steel ribbon, the sides of the opening, as shown in Fig. 103, having the same curvature as the rims of the disks. Thus when these recesses are opposite each other, as in Fig. 104, the cylinder J fills them both, and the tendency of the steel ribbon is to carry it along with H when C moves to one side of this position, as in Fig. 105, and along with H' when C moves to the other side, as in Fig. 103.

This action is made positively certain by means of the hooks K, K', which catch into recesses formed in the upper flange of J, as seen in Fig. 104. The spindles, with which these hooks turn, extend through the hollow studs, and the coiled springs attached to their lower ends, as seen in Fig. 102, urge the hooks in the directions of their points; their motions being limited by stops *o, o'*, fixed, not in the disks H, H', but in projecting collars on the upper ends of the tubular studs. The action will be readily traced by comparing Fig. 104 with Fig. 105; as C goes to the left, the hook K' is left behind, but the other one, K, cannot escape from its engagement with the flange of J; which, accordingly, is carried along with H by the combined action of the hook and the steel ribbon.

On the top of the upper flange of J, is secured a bracket, carrying the bearing of a vertical spindle L, whose centre line is a prolongation of that of J itself. This spindle is driven by the spur-wheel N, keyed on its upper end, through a flexible train of gearing seen in Fig. 99; at its lower end it carries a small milling cutter M, which shapes the edge of the template T, Fig. 105, firmly clamped to the framing.

When the machine is in operation, a heavy weight, seen in Fig. 98 (Plate II.), acts to move C about the pivot D, being attached to the

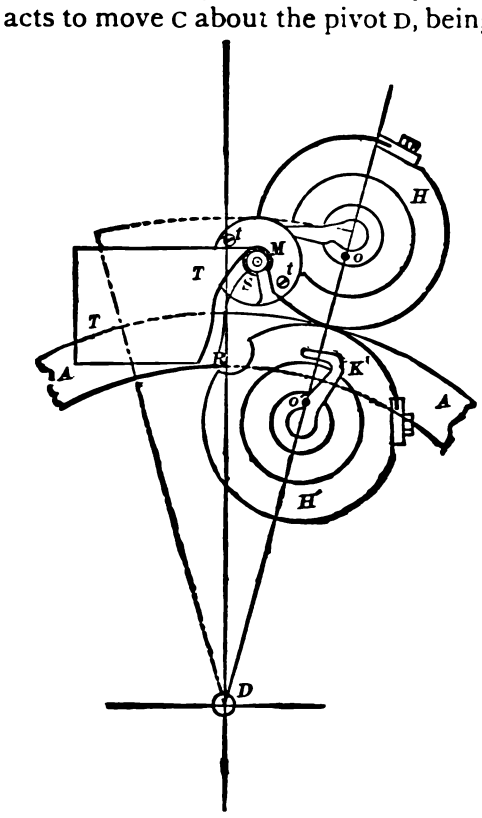

Fig. 105.

carrier by a cord guided by suitably arranged pulleys; this keeps the cutter M up to its work, while the spindle L is independently driven, and the duty left for the worm G to perform is merely that of controlling the motions of the cutter by the means above described, and regulating their speed.

The centre line of the cutter is thus automatically compelled to travel in the path R S, Fig. 105, composed of an epicycloid and a hypocycloid if A A be the segment of a circle as here shown; or of two cycloids, if A A be a straight bar. The radius of the cutter being constant, the edge of the template T is cut to an outline also composed of two curves; since the radius M is small, this outline closely resembles R S.

In Fig. 106 (Plate III.), the edge T T is shaped by the cutter M, whose centre travels in the path R S, therefore these two lines are at a constant normal distance from each other. Let a roller P, of any reasonable diameter, be run along T T, its centre will trace the line U V, which is at a constant normal distance from T T, and therefore from R S. Let the normal distance between U V and R S be the radius of another milling cutter N, having the same axis as the roller P, and carried by it, but in a different plane, as shown in the side view, then whatever N cuts will have R S for its contour, if it lie upon the same side of the cutter as the template.

* From "The Teeth of Spur Wheels," by Professor McCord.

In a machine for generating the curves of wheel teeth, constructed by Messrs. Warner & Swasey, instead of making all gears so that they will run into a rack, the rack is transformed into a cutting tool, and by it the teeth of wheels of any diameter are generated and cut at the same time.

Fig. 1 (Plate III.) illustrates this new gear generating and cutting engine, designed by Mr. Ambrose Swasey, for the purpose of reducing to practice the principles of this process. The cutters are shown in position as they appear in the machine when the teeth are cut partly across the face of the wheel. The cutting spindles and the main spindle which carries the wheel are connected by means of change gears, the number of teeth to be cut in the wheel determining the proportion between the two on the same principle as the change gears of an engine lathe, which gives the cutting spindle as many revolutions to one of the main spindles as there are teeth in the wheel.

The cutting tool is composed of a series of cutters rigidly connected, as shown in Fig. 2 (Plate III.), which revolve, and at the same time move longitudinally or endwise at right angles to the axis of the wheel to be cut, and at the same speed it is continually revolving at the pitch line, the motions being the same as in the case of a rack engaging with a revolving gear.

As it would be impracticable to continue moving the whole series of cutters endwise, they are each bisected, as shown in Fig. 3 (Plate III.), and these segments are connected in series forming two sections, as shown in Fig. 4 (Plate III.), which revolve upon a common axis, and each section is given an independent endwise motion by means of a cam. When one section is engaged in cutting, it is carried endwise in the same direction and at the same velocity that the pitch line of the wheel is revolving, until disengaged from it, when the cutters, while continuing to revolve, are carried back by the cam to their original position, ready for the next tooth. By means of both sections, as they continually revolve and alternately slide forward while cutting, and back when disengaged, there is a continuous cutting and generating process of the teeth in the revolving wheel. The head carrying the cutters is automatically fed across the face of the wheel, and when the cutters have proceeded once across, the gear is completed.

Fig. 3 (Plate III.) is a side elevation of a bisected cutter, and Fig. 2 (Plate III.) shows a series of six cutters, the end one being in elevation, and the others in cross section—thus having cutting portions, which in cross section represent the teeth of a rack, with the addition to the diameter of a given proportion of the pitch, by which the clearance and fillets at the bottom of the teeth are made. If their cutting portions are formed of cycloids, then the whole set of gear wheels cut with them will be of the epicycloidal or double-curve system. If they are formed simply of straight sides, then a set of involute or single curve gears will be generated and cut; or their cutting portions may be composed of both straight lines and cycloids, and produce Professor McCord's recent system of gearing, which has composite teeth with the contours partly involute and partly epicycloidal.

All the cutters in a series are made exactly alike and interchangeable, the thickness of each or the distance from the centre of one to the centre of that adjoining being equal to the pitch of the gear to be cut. As indicated in Fig. 3 (Plate III.), the two segments of a cutter are first made whole, with four holes an equal distance from the centre, through which the rods pass that fasten them together. After the cutters are nearly completed, they are bisected with a narrow tool, leaving two holes in each segment.

Fig. 4 (Plate III.) is a cross section of the head, showing the mechanism for revolving and reciprocating the cutters. The rods which extend through the cutters serve not only to hold them together, but to revolve them, and at the same time act as slides for the reciprocating motion. The spindles on either side of the cutters, through which the rods extend, are revolved independently and at the same speed by means of a parallel shaft having a pinion at each end, which engages with a large gear on each spindle. By this means the four rods carrying the two cutter sections are revolved from each end, thus avoiding the torsional strain which would result if driven from one end only. The pair of rods for each section, after passing through one of the spindles, terminate in semi-cylindrical blocks. From these blocks studs extend, on which are journalled rolls, which engage with a cam which is held rigidly to the head. The cam is shown in Fig. 5 (Plate III.), the working portions being made in the form of a screw thread, which if extended all the way around would have a lead equal to the thickness or pitch of the cutter. As each section of the cutters engages with the wheel but three-fourths of a revolution, the thread portion of the cam which carries the cutters forward extends only three-fourths of its circumference, leaving the other one-fourth for the reverse curves of the cam to bring the cutters back to their starting point. Provision is made for adjusting one section of cutters so as exactly to coincide with the other, making the spaces and teeth of the wheel equal; or, as is often necessary, the space can be made wider than the teeth by setting one section past the other. The variation in the spacing from one tooth to another is reduced to a minimum, as the series of cutters act upon both sides of a number of teeth at the same time, and serve to average and eliminate any local inaccuracies in the division of the index and driving gears; also to obviate any tendency to crowd the wheel from one side to the other.

The forward motion of the cutters and the revolving of the wheel at the pitch line being exactly the same, the process of generating and cutting the teeth goes on continuously and uniformly around the entire periphery, so that one part is not heated more than another, but all the teeth are cut under exactly the same conditions, and when the revolving cutters have once passed across the face, all the teeth in the gear are completed and given the correct form for each diameter of wheel; and as by the Willis theory all gears are cut to run into a rack, so by this process the same theory is put into practice, and a rack is made to cut correctly all gears.

CHAPTER III.—THE TEETH OF GEAR-WHEELS (*continued*).

THE revolving cutters employed in gear-cutting machines, gear-cutters, or cutting engines (as the machines for cutting the teeth of gear-wheels to shape are promiscuously termed), are of the form shown in Fig. 107, which represents what is known as a Brown and Sharpe patent cutter, whose peculiarities will be explained presently. This class of cutters is made as follows :—

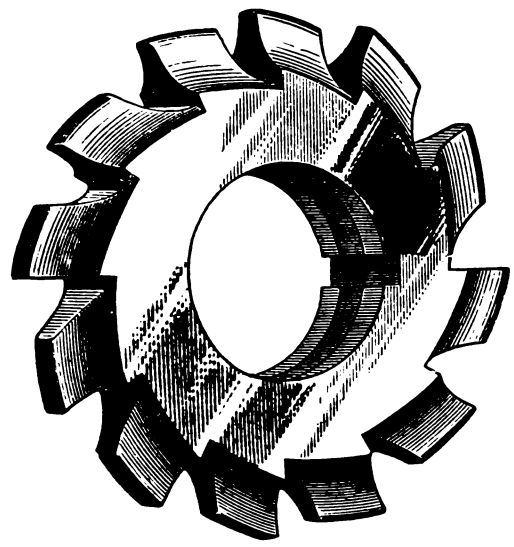

Fig. 107.

A cast steel disk is turned in the lathe to the required form and outline. After turning, its circumference is serrated as shown, so as to provide protuberances, or teeth, on the face of which the cutting edges may be formed. To produce a cutting edge it is necessary that the metal behind that edge should slope or slant away leaving the cutting edge to project. Two methods of accomplishing this are employed: in the first, which is that embodied in the Brown and Sharpe system, each tooth has the curved outline, forming what may be termed its circumferential outline, of the same curvature and shape from end to end, and from front to back, as it may more properly be termed, the clearance being given by the back of the tooth approaching the centre of the cutter, so that if a line be traced along the circumference of a tooth, from the cutting edge to the back, it will approach the centre of the cutter as the back is approached, but the form of the tooth will be the same at every point in the line. It follows then that the radial faces of the teeth may be ground away to sharpen the teeth without affecting the shape of the tooth, which being made correct will remain correct.

This not only saves a great deal of labor in sharpening the teeth, but also saves the softening and rehardening process, otherwise necessary at each resharpening.

The ordinary method of producing the cutting edges after turning the cutter and serrating it, is to cut away the metal with a file or rotary cutter of some kind forming the cutting edge to correct shape, but paying no regard to the shape of the back of the tooth more than to give it the necessary amount of clearance. In this case the cutter must be softened and reset to sharpen it. To bring the cutting edge up to a sharp edge all around its profile, while still preserving the shape to which it was turned, the pantagraphic engine, shown in Fig. 108, has been made by the Pratt and Whitney Company. Figs. 109 and 110 show some details of its construction.* "The milling cutter N is driven by a flexible train acting upon the wheel O, whose spindle is carried by the bracket B, which can slide from right to left upon the piece A, and this again is free to slide in the frame F. These two motions are in horizontal planes, and perpendicular to each other.

"The upper end of the long lever P C is formed into a ball, working in a socket which is fixed to B. Over the cylindrical upper part of this lever slides an accurately fitted sleeve D, partly spherical externally, and working in a socket which can be clamped at any height on the frame F. The lower end P of this lever being accurately turned, corresponds to the roller P in Fig. 106, and is moved along the edge of the template T, which is fastened in the frame in an invariable position.

"By clamping D at various heights, the ratio of the lever arms P D, D C, may be varied at will, and the axis of N made to travel in a path similar to that of the axis of P, but as many times smaller as we choose; and the diameter of N must be made less than that of P in the same proportion.

"The template being on the left of the roller, the cutter to be shaped is placed on the right of N, as shown in the plan view at Z, because the lever reverses the movement.

"This arrangement is not mathematically perfect, by reason of the angular vibration of the lever. This is, however, very small, owing to the length of the lever; it might have been compensated

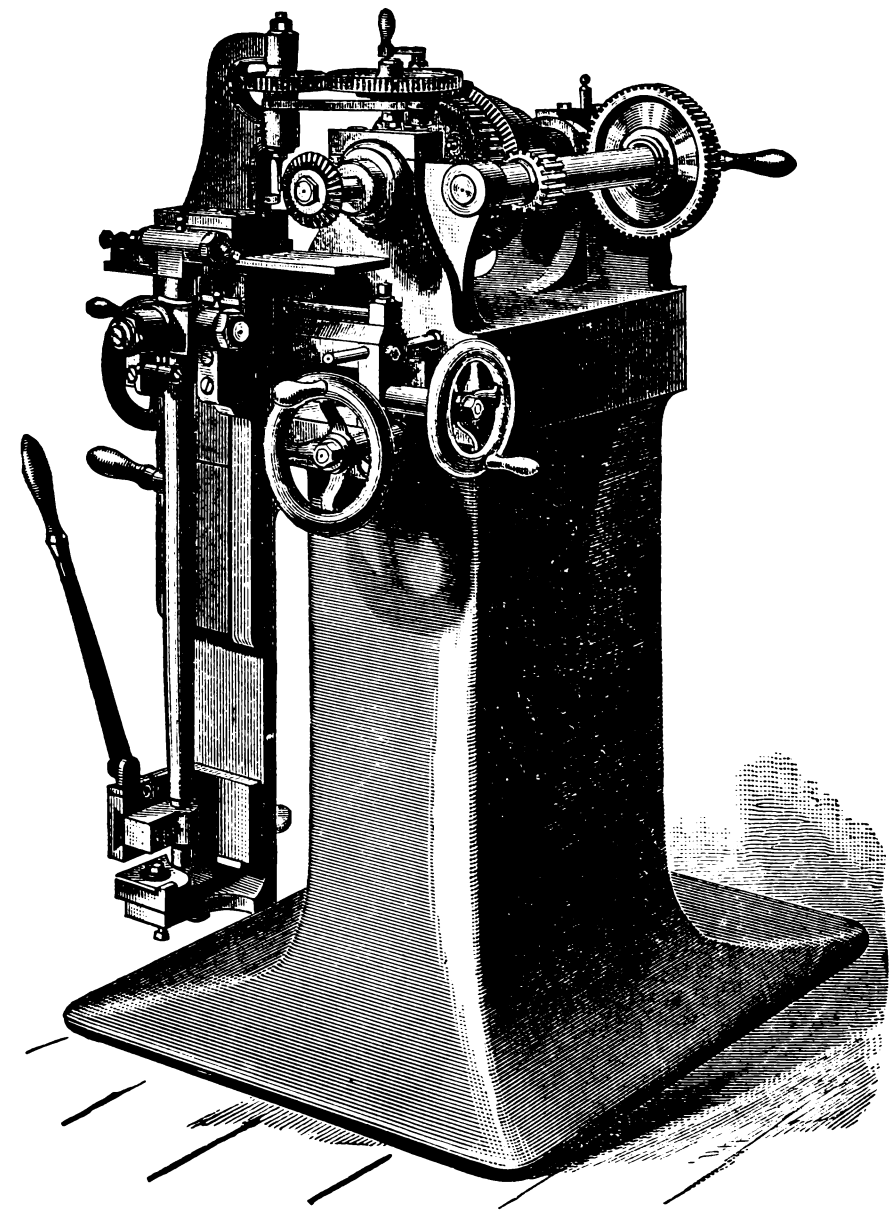

Fig. 108.

for by the introduction of another universal joint, which would practically have introduced an error greater than the one to be obviated, and it has, with good judgment, been omitted.

"The gear-cutter is turned nearly to the required form, the notches are cut in it, and the duty of the pantagraphic engine is merely to give the finishing touch to each cutting edge, and give

* From "The Teeth of Spur Wheels," by Professor McCord.

it the correct outline. It is obvious that this machine is in no way connected with, or dependent upon, the epicycloidal engine; but by the use of proper templates it will make cutters for any desired form of tooth; and by its aid exact duplicates may be made in any numbers with the greatest facility.

"It forms no part of our plan to represent as perfect that which is not so, and there are one or two facts, which at first thought might seem serious objections to the adoption of the epicycloidal system. These are:

"1. It is physically impossible to mill out a *concave* cycloid, by any means whatever, because at the pitch line its radius of curvature is zero, and a milling cutter must have a sensible diameter.

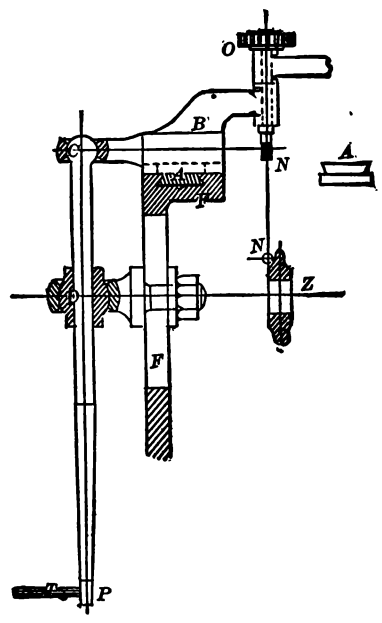

Fig. 109.

"2. It is impossible to mill out even a *convex* cycloid or epicycloid, by the means and in the manner above described.

"This is on account of a hitherto unnoticed peculiarity of the curve at a constant normal distance from the cycloid. In order to show this clearly, we have, in Fig. 110, enormously exaggerated the radius C D, of the milling cutter (M of Figs. 105 and 106). The outer curve H L, evidently, could be milled out by the cutter, whose centre travels in the cycloid C A; it resembles the cycloid somewhat in form, and presents no remarkable features. But the inner one is quite different; it starts at D, and at first goes down, *inside the circle whose radius is* C D, forms a cusp at E, then begins to rise, crossing this circle at G, and the base line at F. It *side* the circle D I, and therefore cuts O G at a point between F and G, but very near to G. This point of intersection is marked S in Fig. 110, where the actual form of the template O S K is shown. The roller which is run along this template is *larger*, as has been explained, than the milling cutter. When the point of contact reaches S (which so nearly corresponds to G that they practically coincide), this roller cannot now swing about S through an angle so great as P G C of Fig. 110; because at the root D, the radius of curvature of

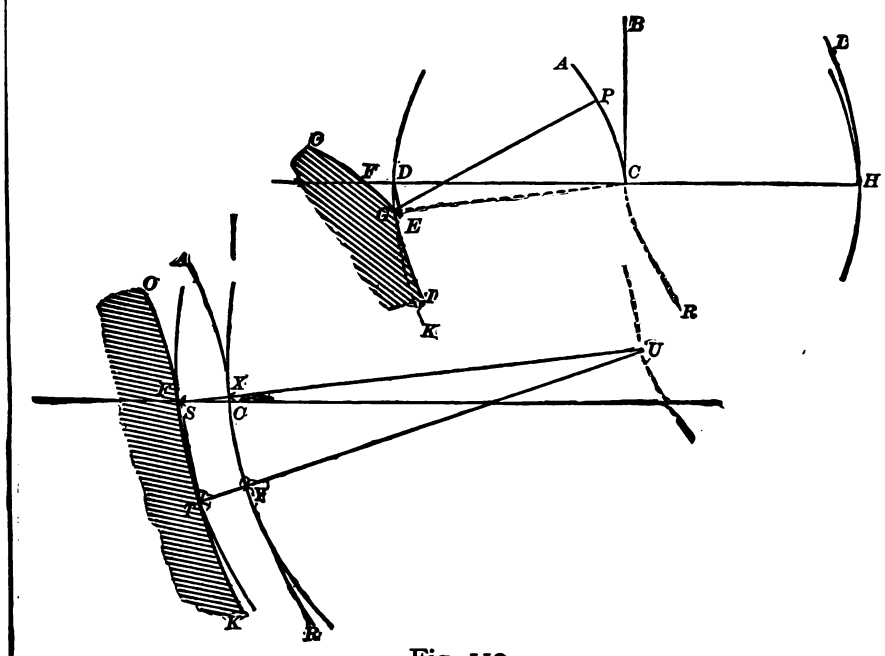

Fig. 110.

D K is only equal to that of the cutter, and G and S are so near the root that the curvature of S K, near the latter point, is greater than that of the roller. Consequently there must be some point U in the path of the centre of the roller, such, that when the centre reaches it, the circumference will pass through S, and be also tangent to S K. Let T be the point of tangency; draw S U and T U, cutting the cycloidal path A R in X and Y. Then, U Y being the radius of the new milling cutter (corresponding to N of Fig. 109), it is clear that in the outline of the gear cutter shaped by it, the circular arc X Y will be substituted for the true cycloid.

The System Practically Perfect.

"The above defects undeniably exist; now, what do they amount to? The diagram is drawn purposely with these sources of error

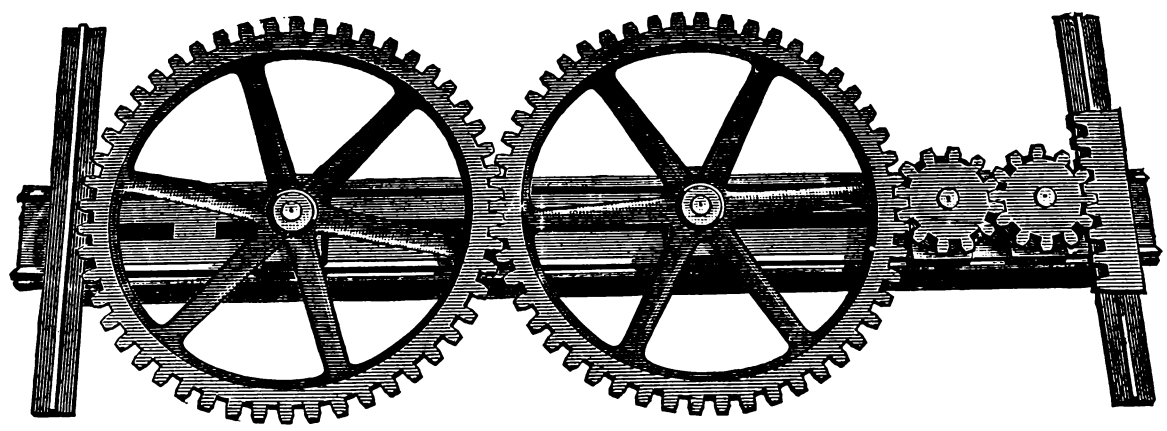

Fig. 111.

will be seen, then, that if the centre of the cutter travel in the cycloid A C, its edge will cut away the part G E D, leaving the template of the form O G I. Now if a roller of the same radius C D, be rolled along this edge, its centre will travel in the cycloid from A, to the point P, where a normal from G, cuts it; then the roller will turn upon G as a fulcrum, and its centre will travel from P to C, in a circular arc whose radius G P = C D.

"That is to say even a roller of the same size as the original milling cutter, will not retrace completely the cycloidal path in which the cutter travelled.

"Now in making a rack template, the cutter, after reaching C, travels in the reversed cycloid C R, its left-hand edge, therefore, milling out a curve D K, similar to H L. This curve lies wholly *out-*

greatly exaggerated, in order to make their nature apparent and their existence sensible. The diameters used in practice, as previously stated, are: describing circle, $7\frac{1}{2}$ inches; cutter for shaping template, $\frac{1}{8}$ of an inch; roller used against edge of template, $1\frac{1}{8}$ inches; cutter for shaping a 1-pitch gear cutter, 1 inch.

"With these data the writer has found that the *total length* of the arc X Y of Fig. 110, which appears instead of the cycloid in the outline of a cutter for a 1-pitch rack, is less than 0·0175 inch; the real *deviation* from the true form, obviously, must be much less than that. It need hardly be stated that the effect upon the velocity ratio of an error so minute, and in that part of the contour, is so extremely small as to defy detection. And the best proof of the practical perfection of this system of making epicycloidal teeth

is found in the smoothness and precision with which the wheels run; a set of them is shown in gear in Fig. 111, the rack gearing as accurately with the largest as with the smallest. To which is to be added, finally, that objection taken, on whatever grounds, to the epicycloidal form of tooth, has no bearing upon the method above described of producing duplicate cutters for teeth of any form, which the pantagraphic engine will make with the same facility and exactness, if furnished with the proper templates.

"The front faces of the teeth of rotary cutters for gear-cutting are usually radial lines, and are ground square across so as to stand parallel with the axis of the cutter driving spindle, so that to whatever depth the cutter may have entered the wheel, the whole of the cutting edge within the wheel will meet the cut simultaneously. If this is not the case the pressure of the cut will spring the cutter, and also the arbor driving it, to one side. Suppose, for example, that the tooth faces not being square across, one side of the teeth meets the work first, then there will be as each tooth meets its cut an endeavour to crowd away from the cut until such time as the other side of the tooth also takes its cut."

It is obvious that rotating cutters of this class cannot be used to cut teeth having the width of the space wider below than it is at the pitch line. Hence, if such cutters are required to be used upon epicycloidal teeth, the curves to be theoretically correct must be such as are due to a generating circle that will give at least parallel flanks. From this it becomes apparent that involute teeth being always thicker at the root than at the pitch line, and the spaces being, therefore, narrower at the root, may be cut with these cutters, no matter what the diameter of the base circle of the involute.

To produce with revolving cutters teeth of absolutely correct theoretical curvature of face and flank, it is essential that the cutter teeth be made of the exact curvature due to the diameter of pitch circle and generating circle of the wheel to be cut; while to produce a tooth thickness and space width, also theoretically correct, the thickness of the cutter must also be made to exactly answer the requirements of the particular wheel to be cut; hence, for every different number of teeth in wheels of an equal pitch a separate cutter is necessary if theoretical correctness is to be attained.

This requirement of curvature is necessary because it has been shown that the curvatures of the epicycloid and hypocycloid, as also of the involute, vary with every different diameter of base circle, even though, in the case of epicycloidal teeth, the diameter of the generating circle remain the same. The requirement of thickness is necessary because the difference between the arc and the chord pitch is greater in proportion as the diameter of the base or pitch circle is decreased.

But the difference in the curvature on the short portions of the curves used for the teeth of fine pitches (and therefore of but little height) due to a slight variation in the diameter of the base circle is so minute, that it is found in practice that no sensible error is produced if a cutter be used within certain limits upon wheels having a different number of teeth than that for which the cutter is theoretically correct.

The range of these limits, however, must (to avoid sensible error) be more confined as the diameter of the base circle (or what is the same thing, the number of the teeth in the wheel) is decreased, because the error of curvature referred to increases as the diameters of either the base or the generating circles decrease. Thus the difference in the curve struck on a base circle of 20 inches diameter, and one of 40 inches diameter, using the same diameter of generating circle, would be very much less than that between the curves produced by the same diameter of generating circle on base circles respectively 10 and 5 inches diameter.

For these reasons the cutters are limited to fewer wheels according as the number of teeth decreases, or, per contra, are allowed to be used over a greater range of wheels as the number of teeth in the wheels is increased.

Thus in the Brown and Sharpe system for involute teeth there are 8 cutters numbered numerically (for convenience in ordering) from 1 to 8, and in the following table the range of the respective cutters is shown, and the number of teeth for which the cutter is theoretically correct is also given.

BROWN AND SHARPE SYSTEM.

No. of cutter.	Involute teeth.	Teeth.
1	Used upon all wheels having from 135 teeth to a rack correct for	200
2	" " " " " 55 " to 134 teeth,	68
3	" " " " " 35 " to 54 "	40
4	" " " " " 26 " to 34 "	29
5	" " " " " 21 " to 25 "	22
6	" " " " " 17 " to 20 "	18
7	" " " " " 14 " to 16 "	16
8	" " " " " 12 " to 14 "	13

Suppose that it was required that of a pair of wheels one make twice the revolutions of the other; then, knowing the particular number of teeth for which the cutters are made correct, we may obtain the nearest theoretically true results as follows: If we select cutters Nos. 8 and 4 and cut wheels having respectively 13 and 26 teeth, the 13 wheel will be theoretically correct, and the 26 will contain the minute error due to the fact that the cutter is used upon a wheel having three less teeth than the number it is theoretically correct for. But we may select the cutters that are correct for 16 and 29 teeth respectively, the 16th tooth being theoretically correct, and the 29th cutter (or cutter No. 4 in the table) being used to cut 32 teeth, this wheel will contain the error due to cutting 3 more teeth than the cutter was made correct for. This will be nearer correct, because the error is in a larger wheel, and, therefore, less in actual amount. The pitch of teeth may be selected so that with the given number of teeth the diameters of the wheels will be that required.

We may now examine the effect of the variation of curvature in combination with that of the thickness, upon a wheel having less and upon one having more teeth than the number in the wheel for which the cutter is correct.

First, then, suppose a cutter to be used upon a wheel having less teeth and it will cut the spaces too wide, because of the variation of thickness, and the curves too straight or insufficiently curved because of the error of curvature. Upon a wheel having more teeth it will cut the spaces too narrow, and the curvature of the teeth too great; but, as before stated, the number of wheels assigned to each cutter may be so apportioned that the error will be confined to practically unappreciable limits.

If, however, the teeth are epicycloidal, it is apparent that the spaces of one wheel must be wide enough to admit the teeth of the other to a depth sufficient to permit the pitch lines to coincide on the line of centres; hence it is necessary in small diameters, in which there is a sensible difference between the arc and the chord pitches, to confine the use of a cutter to the special wheel for which it is designed, that is, having the same number of teeth as the cutter is designed for.

Thus the Pratt and Whitney arrangement of cutters for epicycloidal teeth is as follows:—

PRATT AND WHITNEY SYSTEM.

EPICYCLOIDAL TEETH.

[All wheels having from 12 to 21 teeth have a special cutter for each number of teeth.]*

Cutter correct for No. of teeth.	Used on wheels having from
23	22 to 24 teeth.
25	" " " " 25 to 26 "
27	" " " " 26 to 29 "
30	" " " " 29 to 32 "
34	" " " " 32 to 36 "
38	" " " " 36 to 40 "
43	" " " " 40 to 46 "
50	" " " " 46 to 55 "
60	" " " " 55 to 67 "
76	" " " " 67 to 87 "
100	" " " " 87 to 123 "
150	" " " " 123 to 200 "
300	" " " " 200 to 600 "
Rack	" " " " 600 to rack.

Here it will be observed that by a judicious selection of pitch and cutters, almost theoretically perfect results may be obtained

* For wheels having less than 12 teeth the Pratt and Whitney Co. use involute cutters.

for almost any conditions, while at the same time the cutters are so numerous that there is no necessity for making any selection with a view to taking into consideration for what particular number of teeth the cutter is made correct.

For epicycloidal cutters made on the Brown and Sharpe system so as to enable the grinding of the face of the tooth to sharpen it, the Brown and Sharpe company make a separate cutter for wheels from 12 to 20 teeth, as is shown in the accompanying table, in which the cutters are for convenience of designation denoted by an alphabetical letter.

24 CUTTERS IN EACH SET.

Letter A	cuts		12 teeth.	Letter M	cuts	27 to 29	teeth.
B	,,		13 ,,	N	,,	30 ,, 33	,,
C	,,		14 ,,	O	,,	34 ,, 37	,,
D	,,		15 ,,	P	,,	38 ,, 42	,,
E	,,		16 ,,	Q	,,	43 ,, 49	,,
F	,,		17 ,,	R	,,	50 ,, 59	,,
G	,,		18 ,,	S	,,	60 ,, 74	,,
H	,,		19 ,,	T	,,	75 ,, 99	,,
I	,,		20 ,,	U	,,	100 ,, 149	,,
J	,,	21 to 22	,,	V	,,	150 ,, 249	,,
K	,,	23 ,, 24	,,	W	,,	250 ,, Rack.	
L	,,	25 ,, 26	,,	X	,,	Rack.	

In these cutters a shoulder having no clearance is placed on each side of the cutter, so that when the cutter has entered the wheel until the shoulder meets the circumference of the wheel, the tooth is of the correct depth to make the pitch circles coincide.

In both the Brown and Sharpe and Pratt and Whitney systems, no side clearance is given other than that quite sufficient to prevent the teeth of one wheel from jambing into the spaces of the other. Pratt and Whitney allow $\frac{1}{8}$ of the pitch for top and bottom clearance, while Brown and Sharpe allow $\frac{1}{10}$ of the thickness of the tooth for top and bottom clearance.

It may be explained now, why the thickness of the cutter if employed upon a wheel having more teeth than the cutter is correct for, interferes with theoretrical exactitude.

First, then, with regard to the thickness of tooth and width of space. Suppose, then, Fig. 112 to represent a section of a wheel having 12 teeth, then the pitch circle of the cutter will be represented by line A, and there will be the same difference between

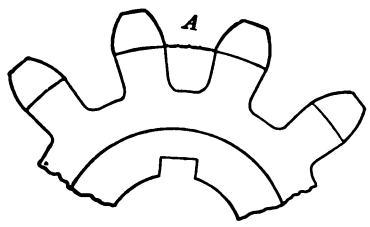

Fig. 112.

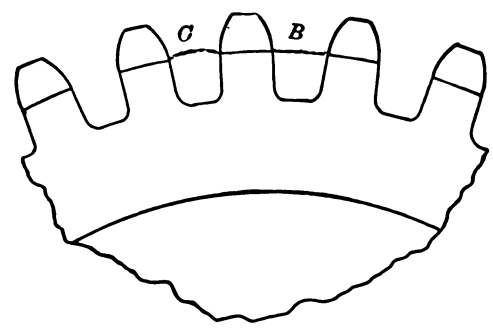

Fig. 113.

the arc and chord pitch on the cutter as there is on the wheel; but suppose that this same cutter be used on a wheel having 24 teeth, as in Fig. 113, then the pitch circle on the cutter will be more curved than that on the wheel as denoted at C, and there will be more difference between the arc and chord pitches on the cutter than there is on the wheel, and as a result the cutter will cut a groove too narrow.

The amount of error thus induced diminishes as the diameter of the pitch circle of the cutter is increased.

But to illustrate the amount. Suppose that a cutter is made to be theoretically correct in thickness at the pitch line for a wheel to contain 12 teeth, and having a pitch circle diameter of 8 inches, then we have

$$\begin{array}{rl} & 3{\cdot}1416 = \text{ratio of circumference to diameter.} \\ & 8 = \text{diameter.} \\ \text{Number of teeth} = 12\overline{)} & 25{\cdot}1328 = \text{circumference.} \\ & 2{\cdot}0944 = \text{arc pitch of wheel.} \end{array}$$

If now we subtract the chord pitch from the arc pitch, we shall obtain the difference between the arc and the chord pitches of the wheel; here

$$\begin{array}{rl} 2{\cdot}0944 & = \text{arc pitch.} \\ 2{\cdot}0706 & = \text{chord pitch.} \\ \cdot 0238 & = \text{difference between the arc and the chord pitch.} \end{array}$$

Now suppose this cutter to be used upon a wheel having the same pitch, but containing 18 teeth; then we have

$$\begin{array}{rl} 2{\cdot}0944 & = \text{arc pitch.} \\ 2{\cdot}0836 & = \text{chord pitch.} \\ \cdot 0108 & = \text{difference between the arc and the chord pitch.} \end{array}$$

Then

$$\begin{array}{rl} \cdot 0238 & = \text{difference on wheel with 12 teeth.} \\ \cdot 0108 & = \text{,, ,, ,, 18 ,,} \\ \cdot 0130 & = \text{variation between the differences.} \end{array}$$

And the thickness of the tooth equalling the width of the space, it becomes obvious that the thickness of the cutter at the pitch line being correct for the 12 teeth, is one half of ·013 of an inch too thin for the 18 teeth, making the spaces too narrow and the teeth too thick by that amount.

Now let us suppose that a cutter is made correct for a wheel having 96 teeth of 2·0944 arc pitch, and that it be used upon a wheel having 144 teeth. The proportion of the wheels one to the other remains as before (for 97 bears the proportion to 144 as 12 does to 18).

Then we have for the 96 teeth

$$\begin{array}{rl} 2{\cdot}0944 & = \text{arc pitch.} \\ 2{\cdot}0934 & = \text{chord pitch.} \\ \cdot 0010 & = \text{difference.} \end{array}$$

For the 144 teeth we have

$$\begin{array}{rl} 2{\cdot}0944 & = \text{arc pitch.} \\ 2{\cdot}0937 & = \text{chord pitch.} \\ \cdot 0007 & = \text{difference.} \end{array}$$

We find, then, that the variation decreases as the size of the wheels increases, and is so small as to be of no practical consequence.

If our examples were to be put into practice, and it were actually required to make one cutter serve for wheels having, say, from 12 to 18 teeth, a greater degree of correctness would be obtained if the cutter were made to some other wheel than the smallest. But it should be made for a wheel having less than the mean diameter (within the range of 12 and 18), that is, having less than 15 teeth; because the difference between the arc and chord pitch increases as the diameter of the pitch circle increases, as already shown.

A rule for calculating the number of wheels to be cut by each cutter when the number of cutters in the set and the number of teeth in the smallest and largest wheel in the train are given is as follows:—

Rule.—Multiply the number of teeth in the smallest wheel of the train by the number of cutters it is proposed to have in the set, and divide the amount so obtained by a sum obtained as follows:—

From the number of cutters in the set subtract the number of the cutter, and to the remainder add the sum obtained by multiplying the number of the teeth in the smallest wheel of the set or train by the number of the cutter and dividing the product by the number of teeth in the largest wheel of the set or train.

Example.—I require to find how many wheels each cutter should cut, there being 8 cutters and the smallest wheel having 12 teeth, while the largest has 300.

Number of teeth in smallest wheel.		Number of cutters in the set.		
12	×	8	=	96

Then

Number of cutters in set.		Number of cutter.		
8	−	7	=	1

Then

Number of teeth in smallest wheel.		The number of the cutter.		The number of the teeth in largest wheel.
12	×	8	+	300

$$\begin{array}{r} 12 \\ 8 \\ \hline 300\overline{)960}\,(0{\cdot}32 \\ 900 \\ \hline 600 \\ 600 \end{array}$$

Now add the 1 to the ·32 and we have 1·32, which we must divide into the 96 first obtained.

Thus

$$\begin{array}{r} 1{\cdot}32\,)\,96{\cdot}00\,(72 \\ \underline{924} \\ 360 \\ \underline{264} \\ 96 \end{array}$$

Hence No. 8 cutter may be used for all wheels that have between 72 teeth and 300 teeth.

To find the range of wheels to be cut by the next cutter, which we will call No. 7, proceed again as before, but using 7 instead of 8 as the number of the cutter.

Thus

Number of teeth in smallest wheel.		Number of cutters in the set.		
12	×	8	=	96

Then

Number of cutters in the set.		Number of cutters.		
8	−	6	=	2

And

Number of teeth in smallest wheel.		The number of the cutter.		The number of teeth in the largest wheel.
12	×	8	+	300

Here

$$\begin{array}{r} 12 \\ 8 \\ \hline 300\overline{)960}\,(0{\cdot}32 \\ 900 \\ \hline 600 \\ 600 \end{array}$$

Add the 2 to the ·32 and we have 2·32 to divide into the 96.

Thus

$$\begin{array}{r} 2{\cdot}32\,)\,96{\cdot}00\,(41 \\ 928 \\ \hline 320 \\ 232 \\ \hline 88 \end{array}$$

Hence this cutter will cut all wheels having not less than the 41 teeth, and up to the 72 teeth where the other cutter begins. For the range of the next cutter proceed the same, using 6 as the number of the cutter, and so on.

By this rule we obtain the lowest number of teeth in a wheel for which the cutter should be used, and it follows that its range will continue upwards to the smallest wheel cut by the cutter above it.

Having by this means found the range of wheels for each cutter, it remains to find for what particular number of teeth within that range the cutter teeth should be made correct, in order to have whatever error there may be equal in amount on the largest and smallest wheel of its range. This is done by using precisely the same rule, but supposing there to be twice as many cutters as there actually are, and then taking the intermediate numbers as those to be used.

Applying this plan to the first of the two previous examples we have—

Number of teeth in the smallest wheel.		Number of cutters in the set.		
12	×	16	=	192

Then

Number of cutters in the set.		Number of the cutter.		
16	−	15	=	1

And

Number of teeth in smallest wheel.		The number of the cutter.		The number of teeth in the largest wheel.
12	×	15	+	300

$$\begin{array}{r} 12 \\ 15 \\ \hline 60 \\ 12 \\ \hline 300\overline{)180{\cdot}0}\,(0{\cdot}6 \\ 1800 \end{array}$$

Then add the 1 to the ·6 = 1·6, and this divided into 192 = 120.

By continuing this process for each of the 16 cutters we obtain the following table:—

Number of Cutter.	Number of Teeth.	Number of Cutter.	Number of Teeth.
1	12	9	26
*2	13	*10	30
3	14	11	35
*4	15	*12	42
5	17	13	54
*6	18	*14	75
7	20·61	15	120
*8	23	*16	300

Suppose now we take for our 8 cutters those marked by an asterisk, and use cutter 2 for all wheels having either 12, 13, or 14 teeth, then the next cutter would be that numbered 4, cutting 14, 15, or 16 toothed wheels, and so on.

A similar table in which 8 cutters are required, but 16 are used in the calculation, the largest wheel having 200 teeth in the set, is given below.

Number of Cutter.	Number of Teeth.	Number of Cutter.	Number of Teeth.
1	12·7	9	26·5
2	13·5	10	29
3	14·5	11	35
4	15·6	12	40.6
5	16·9	13	52·9
6	18	14	67·6
7	21	15	101
8	23·5	16	200

To assist in the selections as to what wheels in a given set the determined number of cutters should be made correct for, so as to obtain the least limit of error, Professor Willis has calculated the following table, by means of which cutters may be selected that will give the same difference of form between any two consecutive numbers, and this table he terms the table of equidistant value of cutters.

TABLE OF EQUIDISTANT VALUE OF CUTTERS.

Number of Teeth.

Rack— 300, 150, 100, 76, 60, 50, 43, 38, 34, 30, 27, 25, 23, 21, 20, 19, 17, 16, 15, 14, 13, 12.

The method of using the table is as follows :—Suppose it is required to make a set of wheels, the smallest of which is to contain 50 teeth and the largest 150, and it is determined to use but one cutter, then that cutter should be made correct for a wheel containing 76, because in the table 76 is midway between 50 and 150.

But suppose it were determined to employ two cutters, then one of them should be made correct for a wheel having 60 teeth, and used on all the wheels having between 50 and 76 teeth, while the other should be made correct for a wheel containing 100 teeth, and used on all wheels containing between 76 and 150 teeth.

In the following table, also arranged by Professor Willis, the most desirable selection of cutters for different circumstances is given, it being supposed that the set of wheels contains from 12 teeth to a rack.

Number of cutters in the set.	Number of Teeth in Wheel for which the Cutter is to be made correct.
2	50 16
3	75 25 15
4	100 34 20 14
6	150 50 30 21 16 13
8	200 67 40 29 22 18 15 13
10	200 77 50 35 27 22 19 16 14 13
12	300 100 60 43 34 27 23 20 17 15 14 13
18	300 150 100 70 50 40 30 26 24 22 20 18 16 15 14 13 12
24	Rack 300 150 100 76 60 50 43 38 34 30 27 25 23 21 20 19 18 17 16 15 14 13 12

Suppose now we take the cutters, of a given pitch, necessary to cut all the wheels from 12 teeth to a rack, then the thickness of the teeth at the pitch line will for the purposes of designation be the thickness of the teeth of all the wheels, which thickness may be a certain proportion of the pitch.

But in involute teeth while the depth of tooth on the cutter may be taken as the standard for all the wheels in the range, and the actual depth for the wheel for which the cutter is correct, yet the depth of the teeth in the other wheels in the range may be varied sufficiently on each wheel to make the thickness of the teeth equal the width of the spaces (notwithstanding the variation between the arc and chord pitches), so that by a variation in the tooth depth the error induced by that variation may be corrected. The following table gives the proportions in the Brown and Sharpe system.

Arc Pitch.	Depth of Tooth.	Depth in terms of the arc pitch.
inches.	inches.	inches.
1·570	1·078	·686
1·394	·958	·687
1·256	·863	·686
1·140	·784	·697
1·046	·719	·687
·896	·616	·686
·786	·539	·685
·628	·431	·686
·524	·359	·685
·448	·307	·685
·392	·270	·686
·350	·240	·686
·314	·216	·687

To avoid the trouble of measuring, and to assist in obtaining accuracy of depth, a gauge is employed to mark on the wheel face a line denoting the depth to which the cutter should be entered.

Suppose now that it be required to make a set of cutters for a certain range of wheels, and it be determined that the cutters be so constructed that the greatest permissible amount of error in any wheel of the set be $\frac{1}{100}$ inch. Then the curves for the smallest wheel, and those for the largest in the set, and the amount of difference between them ascertained, and assuming this difference to amount to $\frac{1}{16}$ inch, which is about $\frac{6}{100}$, then it is evident that 6 cutters must be employed for the set.

It has been shown that on bevel-wheels the tooth curves vary at every point in the tooth breadth; hence it is obvious that the cutter being of a fixed curve will make the tooth to that curve. Again, the thickness of the teeth and breadth of the spaces vary at every point in the breadth, while with a cutter of fixed thickness the space cut will be parallel from end to end. To overcome these difficulties it is usual to give to the cutter a curve corresponding to the curve required at the middle of the wheel face and a thickness equal to the required width of space at its smallest end, which is at the smallest face diameter.

The cutter thus formed produces, when passed through the wheel once, and to the required depth, a tooth of one curve from end to end, having its thickness and width of space correct at the smaller face diameter only, the teeth being too thick and the spaces too narrow as the outer diameter of the wheel is approached. But the position and line of traverse of the cutter may be altered so as to take a second cut, widening the space and reducing the tooth thickness at the outer diameter.

By moving the cutter's position two or three times the points of contact between the teeth may be made to occur at two or three points across the breadth of the teeth and their points of contact; the wear will soon spread out so that the teeth bear all the way across.

Another plan is to employ two or three cutters, one having the correct curve for the inner diameter, and of the correct thickness for that diameter, another having the correct curve for the pitch circle, and another having the correct curve at the largest diameter of the teeth.

The thickness of the first and second cutters must not exceed the required width of space at the small end, while that for the third may be the same as the others, or equal to the thickness of the smallest space breadth that it will encounter in its traverse along the teeth.

The second cutter must be so set that it will leave the inner end of the teeth intact, but cut the space to the required width in the middle of the wheel face. The third cutter must be so set as to leave the middle of the tooth breadth intact, and cut the teeth to the required thickness at the outer or largest diameter.

Cutting Worm-Wheels.

The most correct method of cutting the teeth of a worm-wheel is by means of a worm-cutter, which is a worm of the pitch and form of tooth that the working worm is intended to be, but of hardened steel, and having grooves cut lengthways of the worm so as to provide cutting edges similar to those on the cutter shown in Fig. 107.

The wheel is mounted on an arbor or mandril free to rotate on its axis and at a right angle to the cutter worm, which is rotated and brought to bear upon the perimeter of the worm-wheel in the same manner as the working worm-wheel when in action. The worm-cutter will thus cut out the spaces in the wheel, and must therefore be of a thickness equal to those spaces. The cutter worm acting as a screw causes the worm-wheel to rotate upon its axis, and therefore to feed to the cutter.

In wheels of fine pitch and small diameter this mode of procedure is a simple matter, especially if the form of tooth be such that it is thicker, as the root of the tooth is approached from the pitch line, because in that case the cutter worm may be entered a part of the depth in the worm-wheel and a cut be taken around the wheel. The cutter may then be moved farther into the wheel and a second cut taken around the wheel, so that by continuing the process until the pitch line of the cutter worm coincides with that of the worm-cutter, the worm-wheel may be cut with a number of light cuts, instead of at one heavy cut.

But in the case of large wheels the strain due to such a long line of cutting edge as is possessed by the cutter worm-teeth springs or bends the worm-wheel, and on account of the circular form of the breadth of the teeth this bending or spring causes that part of the tooth arc above the centre of the wheel thickness to lock against the cutter.

To prevent this, several means may be employed. Thus the grooves forming the cutting edges of the worm-cutter may wind spirally along instead of being parallel to the axis of the cutter.

The distance apart of these grooves may be greater than the breadth of tooth a width of worm-wheel face, in which case the cutting edge of one tooth only will meet the work at one time. In addition to this two stationary supports may be placed beneath the worm-wheel (one on each side of the cutter). But on coarse pitches with their corresponding depth of tooth, the difficulty presents itself, that the arbor driving the worm-cutter will spring, causing the cutter to lift and lock as before; hence it is necessary to operate on part of the space at a time, and shape it out to so nearly the correct form that the finishing cut may be a very light one indeed, in which case the worm-cutter will answer for the final cut.

The removal of the surplus metal preparatory to the introduction of the worm-cutter to finish, may be made with a cutter-worm that will cut out a narrow groove being of the thickness equal to the bottom of the tooth space and cutting on its circumference only. This cutter may be fed into the wheel to the permissible depth of cut, and after the cut is taken all around the wheel, it may be entered deeper and a second cut taken, and so on until it has entered the wheel to the necessary depth of tooth. A second cutter-worm may then be used, it being so shaped as to cut the face curve only of the teeth. A third may cut the flank curve only, and finally a worm-cutter of correct form may take a finishing cut over both the faces and the flanks. In this manner teeth of any pitch and depth may be cut. Another method is to use a revolving cutter such as shown in Fig. 107, and to set it at the required angle to the wheel, and then take a succession of cuts around the wheel, the first cut forming a certain part of the tooth depth, the second increasing this depth, and so on until the

final cut forms the tooth to the requisite depth. In this case the cutter operates on each space separately, or on one space only at a time, and the angle at which to set the cutter may be obtained as follows in Fig. 114. Let the length of the line A A equal the diameter of the worm at the pitch circle, and B B (a line at a right angle to A A) represent the axial line of the worm. Let the distance C equal the pitch of the teeth, and the angle of the

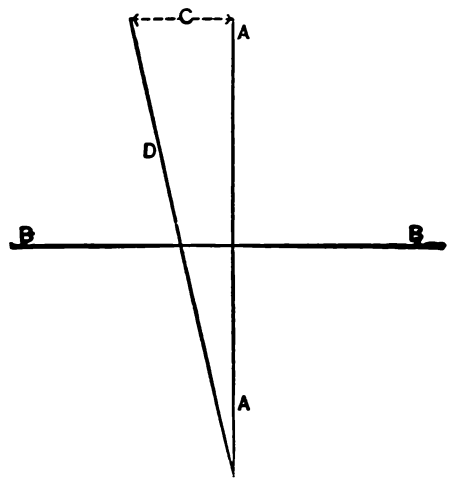

Fig. 114.

line D with A A or B B according to circumstances, will be that to which the cutter must be set with reference to the tooth.

If then a piece of sheet metal be cut to the lines A, D, and the cutter so set that with the edge D of the piece held against the side face of the cutter (which must be flat or straight across), the edge A will stand truly vertical, and the cutter will be at the correct angle supposing the wheel to be horizontal.

In making patterns wherefrom gear-wheels may be cast in a mould, the true curves are frequently represented by arcs of circles struck from the requisite centres and of the most desirable

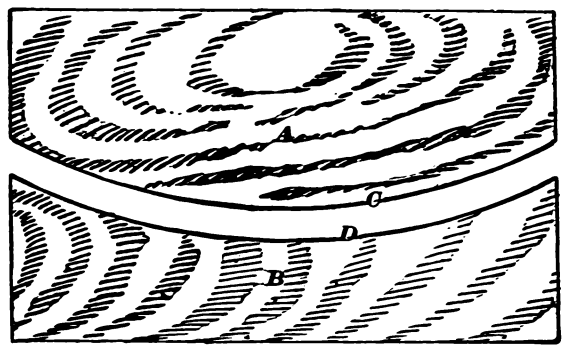

Fig. 115.

radius with compasses, and this will be treated after explaining the pattern maker's method of obtaining true curves by rolling segments by hand. If, then, the wheels are of small diameter, as say, less than 12 inches in diameter, and precision is required, it is best to turn in the lathe wooden disks representing in their diameters the base and generating circles. But otherwise, wooden segments to answer the same purpose may be made as from a piece of soft wood, such as pine or cedar, about three-

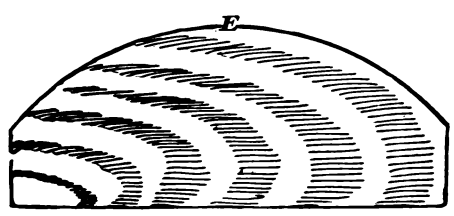

Fig. 116.

eighths inch thick, make two pieces A and B, in Fig. 115, and trim the edges C and D to the circle of the pitch line of the required wheel. If the diameter of the pitch circle is marked on a drawing, the pieces may be laid on the drawing and sighted for curvature by the eye. In the absence of a drawing, strike a portion of the pitch circle with a pair of sharp-pointed compasses on a piece of zinc, which will show a very fine line quite clear. After the pieces are filed to the circle, try them together by laying them flat on a piece of board, bringing the curves in contact and sweeping A against B, and the places of contact will plainly show, and may be filed until continuous contact along the curves is obtained. Take another similar piece of wood and form it as shown in Fig. 116, the edge E representing a portion of the rolling circle. In preparing these segments it is an excellent plan to file the convex edges, as shown in Fig. 117, in which P is a piece of iron or wood

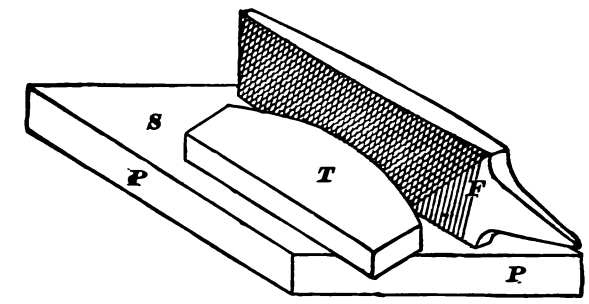

Fig. 117.

having its surface S trued; F is a file held firmly to S, while its surface stands vertical, and T is the template laid flat on S, while swept against the file. This insures that the edge shall be square across or at least at the same angle all arcund, which is all that is absolutely necessary. It is better, however, that the edges be square. So likewise in fitting A and B (Fig. 115) together, they should be laid flat on a piece of board. This will insure that they will have contact clear across the edge, which will give more grip and make slip less likely when using the segments. Now take a piece of stiff drawing paper or of sheet

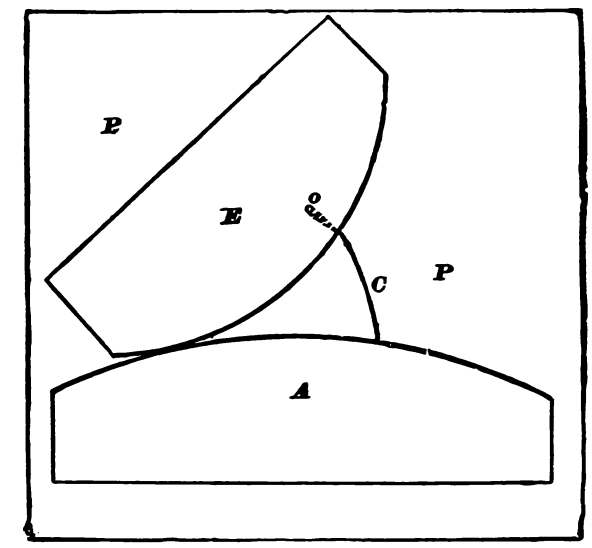

Fig. 118.

zinc, lay segment A upon it, and mark a line coincident with the curved edge. Place the segment representing the generating circle flat on the paper or zinc, hold its edge against segment A, and roll it around a sufficient distance to give as much of the curve as may be required; the operation being illustrated in Fig. 118, in which A is the segment representing the pitch or base circle, E is the segment representing the generating circle, P is the paper, C the curve struck by the tracing point or pencil O.

This tracing point should be, if paper be used to trace on, a piece of the *hardest* pencil obtainable, and should be filed so

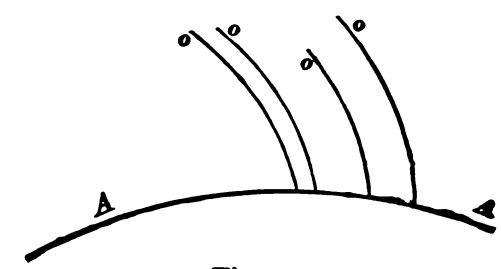

Fig. 119.

that its edge, if flat, shall stand as near as may be in the line of motion when rolled, thus marking a fine line. If sheet zinc be used instead of paper a needle makes an excellent tracing point. Several of the curves, C, should be struck, moving the position of the generating segment a little each time.

On removing the segments from the paper, there will appear the lines shown in Fig. 119; A representing the pitch circle, and O O O the curves struck by the tracing point.

Cut out a piece of sheet zinc so that its edge will coincide with the curve A and the epicycloid O, trying it with all four of the epicycloids to see that no slip has occurred when marking them; shape a template as shown in Fig. 120. Cutting the notches at *a b*, acts to let the file clear well when filing the template, and to allow the scriber to go clear into the corner. Now take the segment A in Fig. 118, and use it as a guide to carry the pitch circle across the template as at P, in Fig. 120. A zinc template for the flank curve is made after the same manner, using the rolling segment in conjunction with the segment B in Fig. 115.

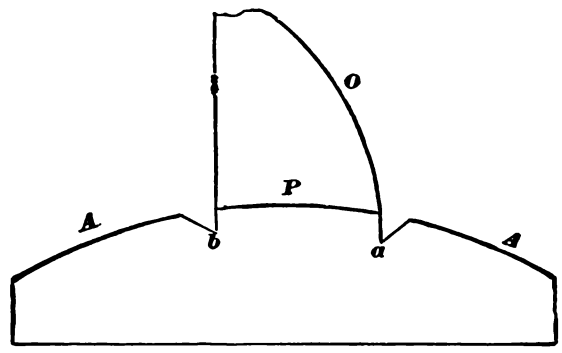

Fig. 120.

But the form of template for the flank should be such as shown in Fig. 121, the curve P representing, and being of the same radius as the pitch circle, and the curve F being that of the hypocycloid. Both these templates are set to the pitch circles and to coincide with the marks made on the wheel teeth to denote the thickness, and with a hardened steel point a line is traced on the tooth showing the correct curve for the same.

An experienced hand will find no difficulty in producing true templates by this method, but to avoid all possibility of the segments slipping on coarse pitches, and with large segments,

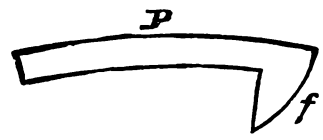

Fig. 121.

the segments may be connected, as shown in Fig. 122, in which O represents a strip of steel fastened at one end into one segment and at the other end to the other segment. Sometimes, indeed, where great accuracy is requisite, two pieces of steel are thus employed, the second one being shown at P P, in the figure. The surfaces of these pieces should exactly coincide with the edge of the segments.

The curve templates thus produced being shaped to apply to the pitch circle may be correctly applied to that circle independently of its concentricity to the wheel axis or of the points of the

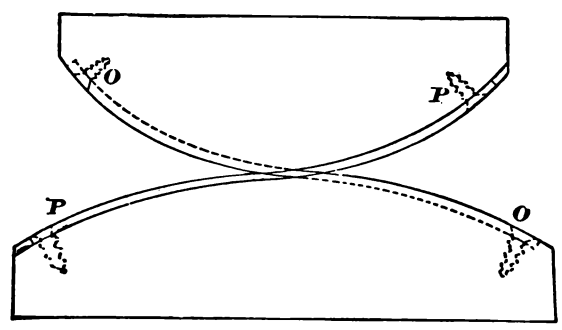

Fig. 122.

teeth, but if the points of the teeth are turned in the lathe so as to be true (that is, concentric to the wheel axis) the form of the template may be such as shown in Fig. 123, the radius of the arc A A equalling that of the addendum circle or circumference at the points of the teeth, and the width at B (the pitch circle) equaling the width of a space instead of the thickness of a tooth. The curves on each side of the template may in this case be filed for the full side of a tooth on each side of the template so that it will completely fill the finished space, or the sides of two contiguous teeth may be marked at one operation. This template may be set to the marks made on the teeth at the pitch circle to denote their requisite thickness, or for greater accuracy, a similar template made double so as to fill two finished tooth spaces may be employed, the advantage being that in this case the template

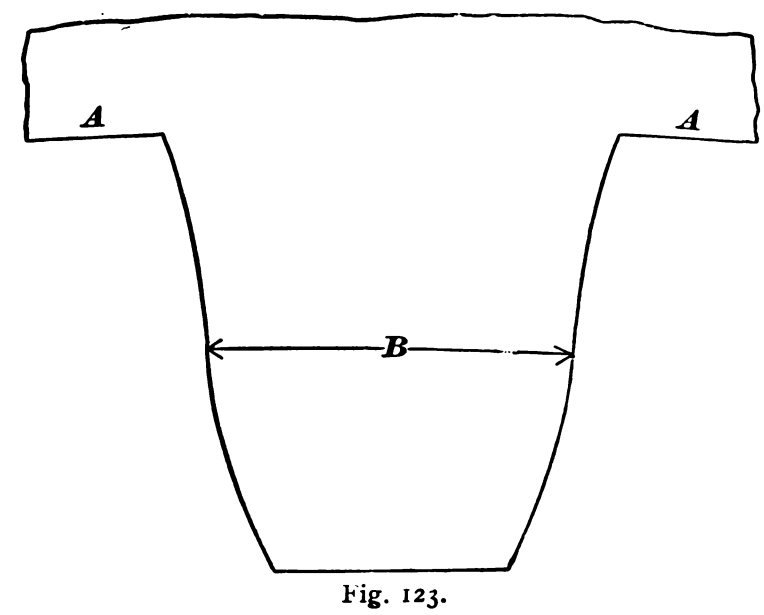

Fig. 123.

also serves to mark or test the thickness of the teeth. Since, however, a double template is difficult to make, a more simple method is to provide for the thickness of a tooth, the template

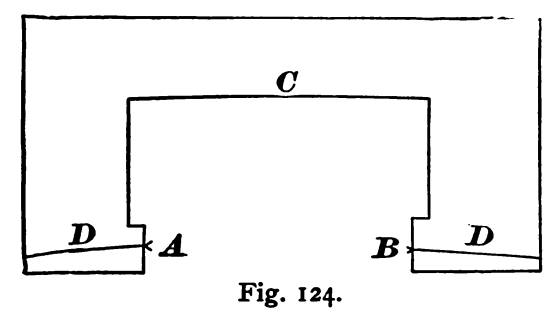

Fig. 124.

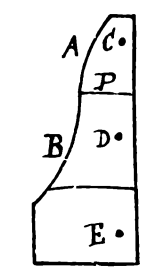

Fig. 125.

shown in Fig. 124, the width from A to B being either the thickness of tooth required or twice the thickness of a tooth plus the width of a space, so that it may be applied to the outsides of two

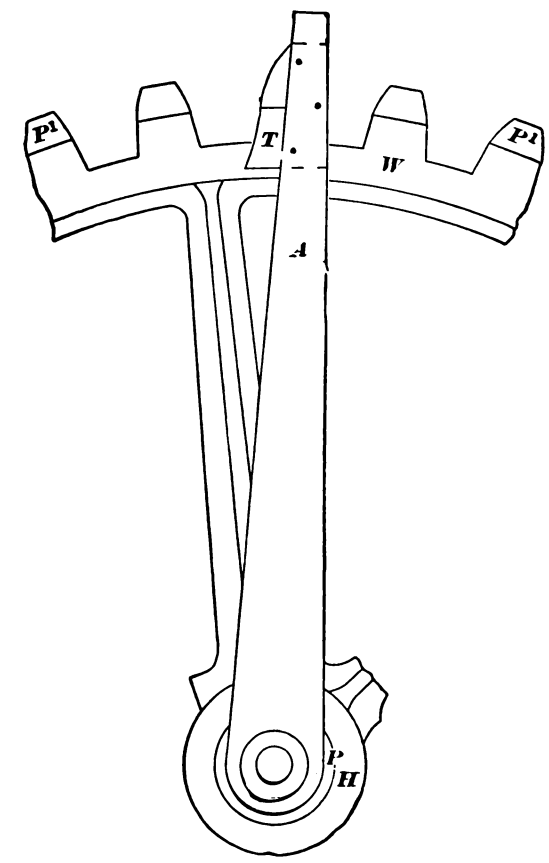

Fig. 126.

contiguous teeth. The arc C may be made both in its radius and distance from the pitch circle D D to equal that of the addendum circle, so as to serve as a gauge for the tooth points, if the latter are not turned true in the lathe, or to rest on the addendum circle

(if the teeth points are turned true), and adjust the pitch circle D D to the pitch circle of the wheel.

The curves for the template must be very carefully filed to the lines produced by the rolling segments, because any error in the template is copied on every tooth marked from it. Furthermore, instead of drawing the pitch circle only, the addendum circle and circle for the roots of the teeth or spaces should also be drawn, so that the template may be first filed to them, and then adjusted to them while filing the edges to the curves.

Another form of template much used is shown in Fig. 125. The curves A and B are filed to the curve produced by rolling segments as before, and the holes C,D,E, are for fastening the template to an arm, such as shown in Fig. 126, which represents a section of a wheel W, with a plug P, fitting tightly into the hub H of the wheel. This plug carries at its centre a cylindrical pin on which pivots the arm A. The template T is fastened to the arm by screws, and set so that its pitch circle coincides with the pitch circle P on the wheel, when the curves for one side of all the teeth may be marked. The template must then be turned over to mark the other side of the teeth.

The objection to this form of template is that the length of arc representing the pitch circle is too short, for it is absolutely essential that the pitch line on the template (or line representing the arc of the addendum if that be used) be greater than the width of a single tooth, because an error of the thickness of a line (in the thickness of a tooth), in the coincidence of the pitch line of the template with that of the tooth, would throw the tooth curves out to an extent altogether inadmissible where true work is essential.

To overcome this objection the template may be made to equal half the thickness of a tooth and its edge filed to represent a radial line on the wheel. But there are other objections, as, for example, that the template can only be applied to the wheel when adjusted on the arm shown in Fig. 126, unless, indeed, a radial

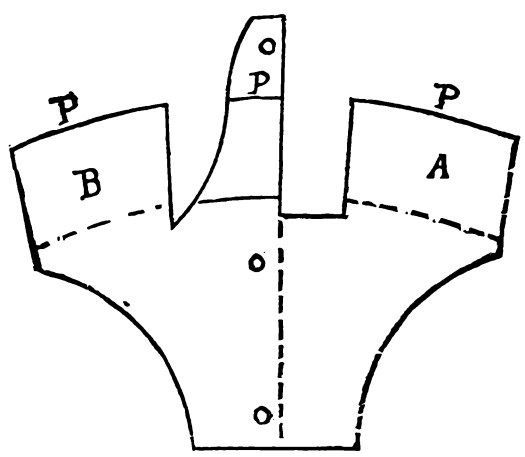

Fig. 127.

line be struck on every tooth of the wheel. Again, to produce the template a radial line representing the radius of the wheel must be produced, which is difficult where segments only are used to produce the curves. It is better, therefore, to form the template as shown in Fig. 127, the projections at A B having their edges filed to coincide with the pitch circle P, so that they may be applied to a length of one arc of pitch circle at least equal to the pitch of the teeth.

The templates for the tooth curves being obtained, the wheel must be divided off on the pitch circle for the thickness of the teeth and the width of the spaces, and the templates applied to the marks or points of division to serve as guides to mark the tooth curves. Since, however, as already stated, the tooth curves are as often struck by arcs of circles as by templates, the application of such arcs and their suitability may be discussed.

Marking the Curves by Hand.

In the employment of arcs of circles several methods of finding the necessary radius are found in practice.

In the best practice the true curve is marked by the rolling segments already described, and the compass points are set by trial to that radius which gives an arc nearest approaching to the true face and flank curves respectively. The degree of curve error thus induced is sufficient that the form of tooth produced cannot with propriety be termed epicycloidal teeth, except in the case of fine pitches in which the arc of a circle may be employed to so nearly approach the true curve as to be permissible as a

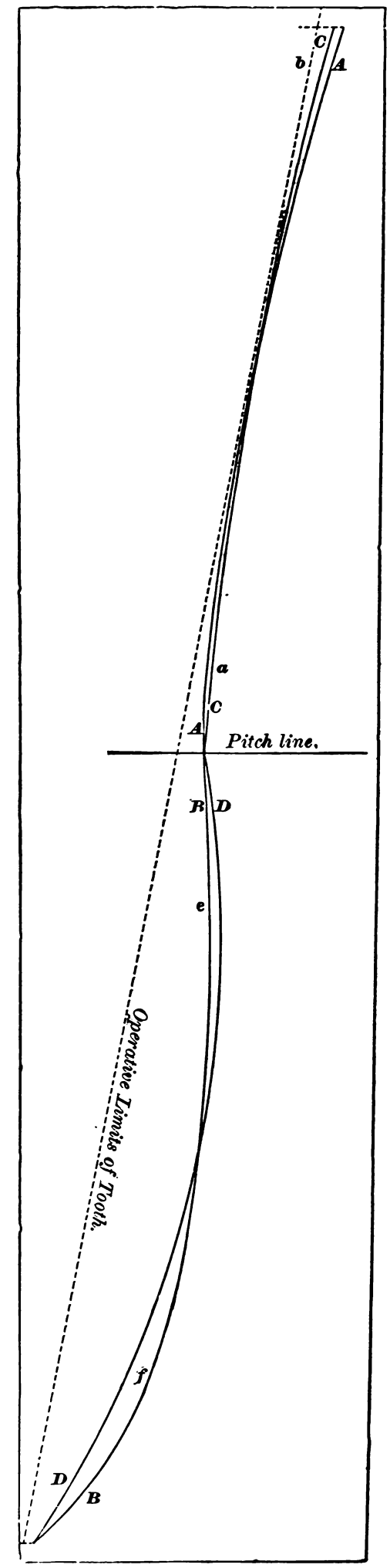

Fig. 128.

substitute. But in coarse pitches the error is of much importance. Thus in Fig. 128 is shown the curve of the *former* or *template* attachment used on the celebrated Corliss Bevel Gear Cutting Machine, to cut the teeth on the bevel-wheels employed upon the line shafting at the Centennial Exhibition. These gears, it may

be remarked, were marvels of smooth and noiseless running, and attracted wide attention both at home and abroad. The engraving is made from a drawing marked direct from the *former* itself, and kindly furnished me by Mr. George H. Corliss. A A is the face and B B the flank of the tooth, C C is the arc of a circle

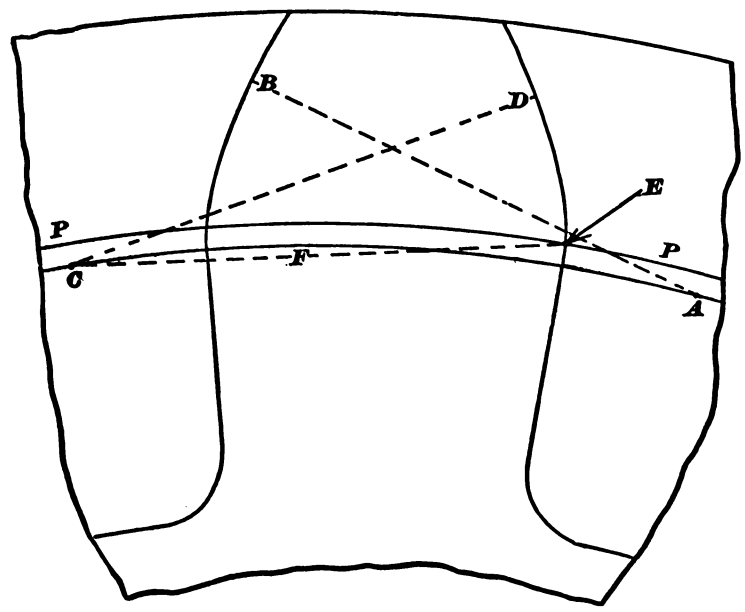

Fig. 129.

nearest approaching to the face curve, and D D the arc of a circle nearest approaching the flank curve. In the face curve, there are but two points where the circle coincides with the true curve, while in the flank there are three such points; a circle of smaller radius than C C would increase the error at *b*, but decrease it at *a*; one of a greater radius would decrease it at *b*, and increase it at *a*. Again, a circle larger in radius than D D would decrease the error at *e* and increase it at *f*; while one smaller would increase it at *e* and decrease it at *f*. Only the working part of the tooth is given in the illustration, and it will be noted that the error is greatest in the flank, although the circle has three points of coincidence.

In this case the depth of the *former* tooth is about three and three-quarter times greater than the depth of tooth cut on the bevel-wheels; hence, in the figure the actual error is magnified three and three-quarter times. It demonstrates, however, the impropriety of calling coarsely pitched teeth that are found by arcs of circles "epicycloidal" teeth.

When, however, the pitches of the teeth are fine as, say an inch or less, the coincidence of an arc of a circle with the true curve is sufficiently near for nearly all practical purposes, and in the case of cast gear the amount of variation in a pitch of 2 inches would be practically inappreciable.

To obtain the necessary set of the compasses to mark the curves, the following methods may be employed.

First by rolling the true curves with segments as already described, and the setting the compass points (by trial) to that radius which gives an arc nearest approaching the true curves. In this operation it is not found that the location for the centre from which the curve must be struck always falls on the pitch circle, and since that location will for every tooth curve lie at the same radius from the wheel centre it is obvious that after the proper location for one of the curves, as for the first tooth face or tooth flank as the case may be, is found, a circle may be struck denoting the radius of the location for all the teeth. In Fig. 129, for example, P P represents the pitch circle, A B the radius that will produce an arc nearest approaching the true curve produced by rolling segments, and A the location of the centre from which the face arc B should be struck. The point A being found by trial with the compasses applied to the curve B, the circle A C may be struck, and the location for the centres from which the face arcs of each tooth must be struck will also fall on this circle, and all that is necessary is to rest one point of the compasses on the side of the tooth as, say at E, and mark on the second circle A C the point C, which is the location wherefrom to mark the face arc D.

If the teeth flanks are not radial, the locations of the centre wherefrom to strike the flank curves are found in like manner by trial of the compasses with the true curves, and a third circle, as I in Fig. 130, is struck to intersect the first point found, as at G in the figure. Thus there will be upon the wheel face three circles, P P the pitch circle, J J wherefrom to mark the face curves, and I wherefrom to mark the flank curves.

When this method is pursued a little time may be saved, when dividing off the wheel, by dividing it into as many divisions as there are teeth in the wheel, and then find the locations for the curves as in Fig. 131, in which 1, 2, 3 are points of divisions on the pitch circle P P, while A, B, struck from point 2, are centres wherefrom to strike the arcs E, F; C, D, struck also from point 2 are centres wherefrom to strike the flank curves G, H.

It will be noted that all the points serving as centres for the face curves, in Fig. 130, fall within a space; hence if the teeth were

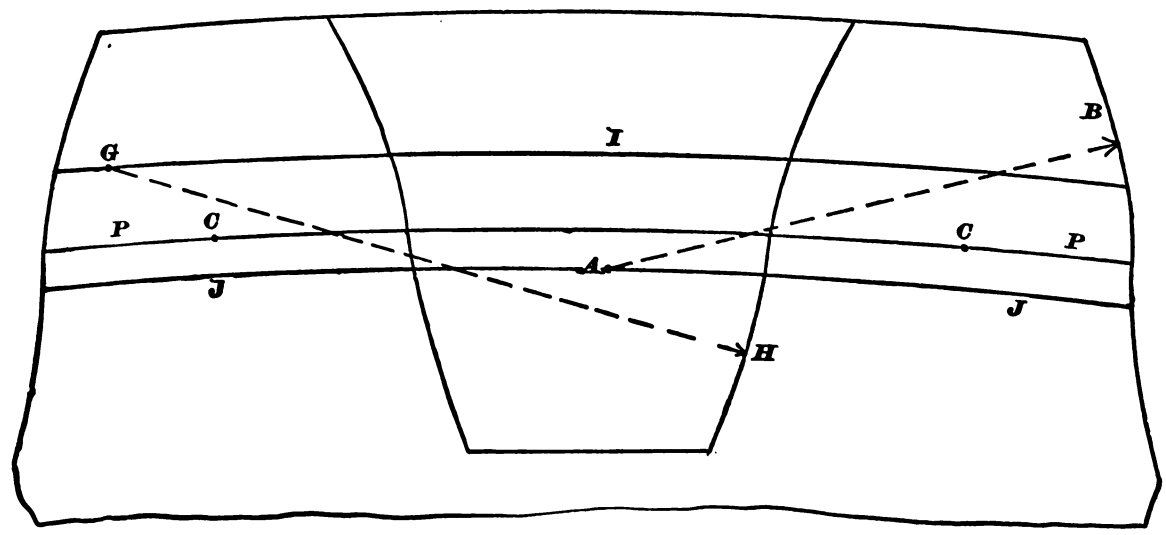

Fig. 130.

rudely cast in the wheel, and were to be subsequently cut or trimmed to the lines, some provision would have to be made to receive the compass points.

To obviate the necessity of finding the necessary radius from rolling segments various forms of construction are sometimes employed.

Thus Rankine gives that shown in Fig. 132, which is obtained

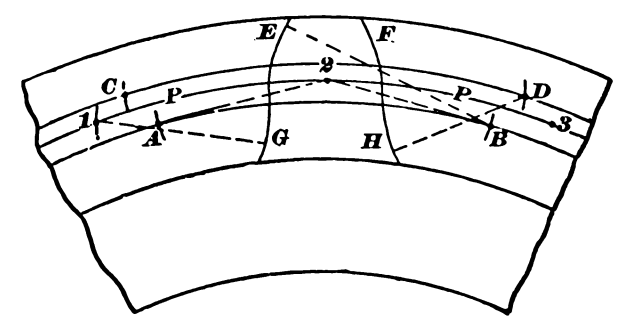

Fig. 131.

as follows. Draw the generating circle D, and A D the line of centres. From the point of contact at C, mark on circle D, a point distance from C one-half the amount of the pitch, as at P, and draw the line P C of indefinite length beyond C. Draw a line from P, passing through the line of centres at E, which is

equidistant between C and A. Then multiply the length from P to C by the distance from A to D, and divide by the distance between D and E. Take the length and radius so found, and mark it upon P C, as at F, and the latter will be the location of centre for compasses to strike the face curve.

Another method of finding the face curve, with compasses, is as follows: In Fig. 133, let P P represent the pitch circle of the wheel to be marked, and B C the path of the centre of the generating or describing circle as it rolls outside of P P. Let the point B represent the centre of the generating circle when that circle is in contact with the pitch circle at A. Then from B, mark off on B C any number of equidistant points, as D, E, F, G, H, and from

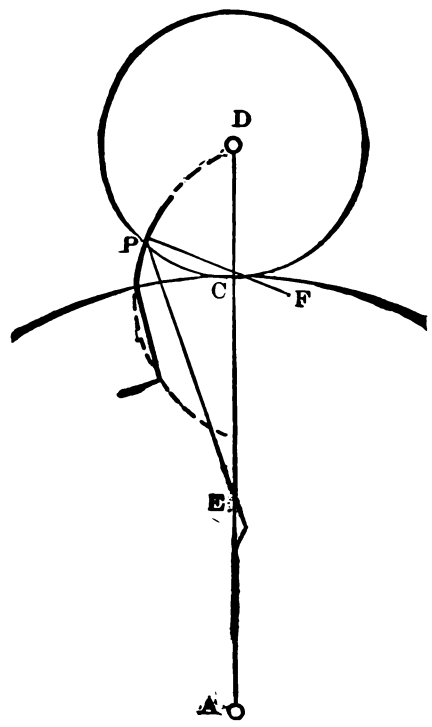

Fig. 132.

A, mark on the pitch circle, points of division, as 1, 2, 3, 4, 5, at the intersection of radial lines from D, E, F, G, and H. With the radius of the generating circle, that is, A B, from B, as a centre, mark the arc I, from D the arc J, from E the arc K, &c., to M, marking as many arcs as there are points of division on B C. With the compasses set to the radius of divisions 1, 2, step off on arc M the five divisions, N, O, S, T, V, and V will be a point in the epicycloidal curves. From point of division 4, step off on L four points of division, as *a*, *b*, *c*, *d*, and *d* will be another point in the epicycloidal curve. From point 3 set off three divisions on K, from point 2 two dimensions on L, and so on, and through the

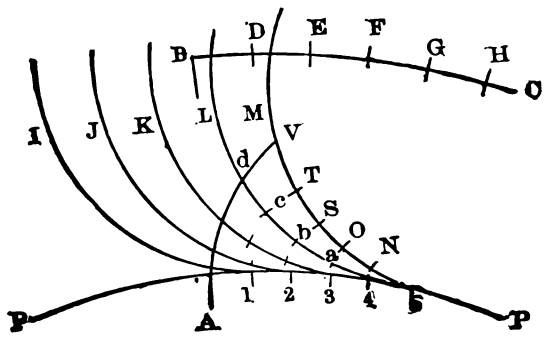

Fig. 133.

points so obtained, draw by hand or with a scroll the curve represented in the cut by curve A V.

Hypocycloids for the flanks of the teeth may be traced in a similar manner. Thus in Fig. 134 P P is the pitch circle, and B C the line of motion of the centre of the generating circle to be rolled within P P, and R a radial line. From 1 to 6 are points of equal division on the pitch circle, and D to I are arc locations for the centre of the generating circle. Starting from A, which represents the supposed location for the centre of the generating circle, the point of contact between the generating and base circles will be at B. Then from 1 to 6 are points of equal division on the pitch circle, and from D to I are the corresponding locations for the centres of the generating circle. From these centres the arcs J, K, L, M, N, O, are struck. From 6 mark the six points of division from *a* to *f*, and *f* is a point in the curve. Five divisions on N, four on M, and so on, give respectively points in the curve which is marked in the figure from A to *f*.

There is this, however, to be noted concerning the constructions of the last two figures. Since the circle described by the centre of the generating circle is of different arc or curve to that of the pitch circle, the chord of an arc having an equal length on each will be different. The amount is so small as to be practically correct. The direction of the error is to give to the curves a less curvature, as though they had been produced by a generating circle of larger diameter. Suppose, for example, that the difference between the arc N 5 (Fig. 133) and its chord is ·1, and that the difference between the arc 4 5, and its chord is ·01, then the error in one step is ·09, and, as the point V is formed in 5 steps, it will contain this error multiplied five times. Point *d* would contain it multiplied four times, because it has 4 steps, and so on.

The error will increase in proportion as the diameter of the generating is less than that of the pitch circle, and though in large wheels, working with large wheels (so that the difference between the radius of the generating circle and that of the smallest wheel is not excessive), it is so small as to be practically inappreciable, yet in small wheels, working with large ones, it may form a sensible error.

An instrument much employed in the best practice to find the radius which will strike an arc of a circle approximating the true

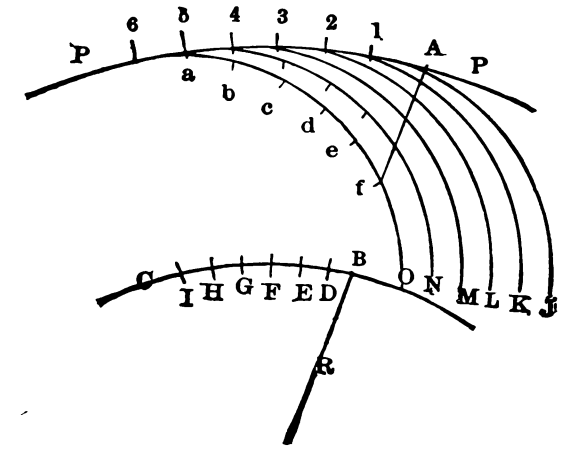

Fig. 134.

epicycloidal curve, *and for finding at the same time* the location of the centre wherefrom that curve should be struck, is found in the Willis' odontograph. This is, in reality, a scale of centres or radii for different and various diameters of wheels and generating circles. It consists of a scale, shown in Fig. 135, and is formed of a piece of sheet metal, one edge of which is marked or graduated in divisions of one-twentieth of an inch. The edge meeting the graduated edge at o is at angle of 75° to the graduated edge.

On one side of the odontograph is a table (as shown in the cut), for the flanks of the teeth, while on the other is the following table for the faces of the teeth:

TABLE SHOWING THE PLACE OF THE CENTRES UPON THE SCALE.

CENTRES FOR THE FACES OF THE TEETH.

Pitch in Inches and Parts.

No. of Teeth	¼	⅜	½	⅝	¾	1	1¼	1½	1¾	2	2¼	2½	3	3½
12	1	2	2	3	4	5	6	7	9	10	11	12	15	17
15	..	..	3	..	..	..	7	8	10	11	12	14	17	19
20	2	..	..	4	5	6	8	9	11	12	14	15	18	21
30	..	3	4	..	..	7	9	10	12	14	16	18	21	25
40	..	..	..	..	6	8	..	11	13	15	17	19	23	26
60	..	..	..	5	..	..	10	12	14	16	18	20	25	29
80	..	..	..	..	..	9	11	13	15	17	19	21	26	30
100	..	..	..	..	7	..	..	..	..	18	20	22	..	31
150	..	..	5	6	..	..	..	14	16	19	21	23	27	32
Rack.	..	4	..	..	..	10	12	15	17	20	22	25	30	34

The method of using the instrument is as follows: In Fig. 136, let C represent the centre, and P the pitch circle of a wheel to contain 30 teeth of 3 inch arc pitch. Draw the radial line L, meeting the pitch circle at A. From A mark on the pitch circle, as at B, a radius equal to the pitch of the teeth, and the thickness of the tooth as A *k*. Draw from B to C the radial line E. Then for the flanks place the slant edge of the odontograph coincident and parallel with E, and let its corners coincide with the pitch circle as shown. In the table headed *centres for the flanks of the teeth*, look down the column of 3 inch pitch, and opposite to the 30 in the column of numbers of teeth, will be found the number 49, which indicates that the centre from which to draw an arc for the flank is at 49 on the graduated edge of the odontograph, as denoted in the cut by *r*. Thus from *r* to the side *k* of the tooth is the radius for the compasses, and at *r*, or 49, is the location for the centre to strike the flank curve *f*. For the face curve set the slant edge of the odontograph coincident with the radial line L, and in the table of centres for the faces of teeth, look down the column of 3-inch pitch, and opposite to 30 in the number of teeth column will be found the number 21, indicating that at 21 on the graduated edge of the odontograph, is the location of the centre wherefrom to strike the curve *d* for the face of the tooth, this location being denoted in the cut at R.

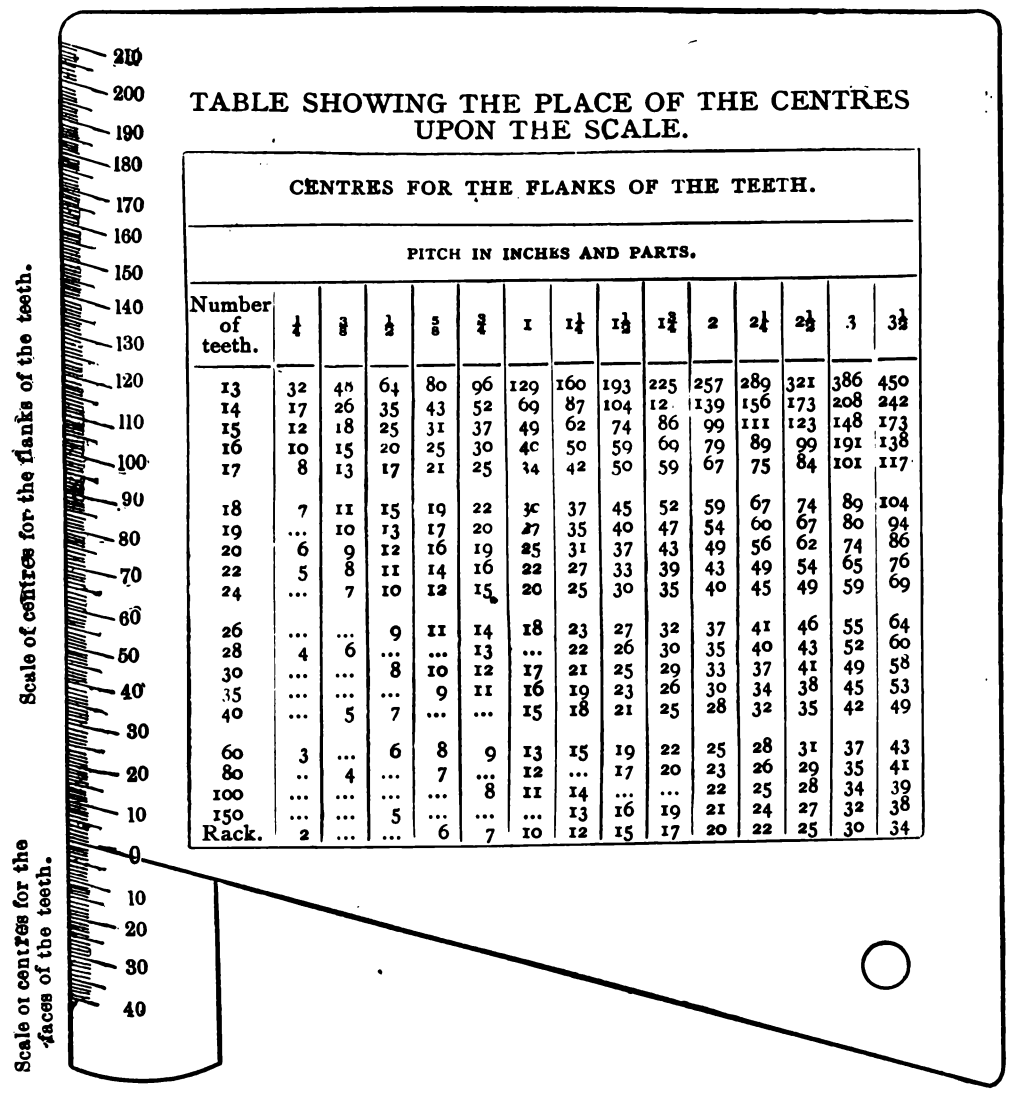

TABLE SHOWING THE PLACE OF THE CENTRES UPON THE SCALE.

CENTRES FOR THE FLANKS OF THE TEETH.

PITCH IN INCHES AND PARTS.

Number of teeth.	¼	⅜	½	⅝	¾	1	1¼	1½	1¾	2	2¼	2½	3	3½
13	32	48	64	80	96	129	160	193	225	257	289	321	386	450
14	17	26	35	43	52	69	87	104	12	139	156	173	208	242
15	12	18	25	31	37	49	62	74	86	99	111	123	148	173
16	10	15	20	25	30	40	50	59	69	79	89	99	191	138
17	8	13	17	21	25	34	42	50	59	67	75	84	101	117
18	7	11	15	19	22	30	37	45	52	59	67	74	89	104
19	...	10	13	17	20	27	35	40	47	54	60	67	80	94
20	6	9	12	16	19	25	31	37	43	49	56	62	74	86
22	5	8	11	14	16	22	27	33	39	43	49	54	65	76
24	...	7	10	12	15	20	25	30	35	40	45	49	59	69
26	...	...	9	11	14	18	23	27	32	37	41	46	55	64
28	4	6	...	...	13	...	22	26	30	35	40	43	52	60
30	...	...	8	10	12	17	21	25	29	33	37	41	49	58
35	...	...	...	9	11	16	19	23	26	30	34	38	45	53
40	...	5	7	...	...	15	18	21	25	28	32	35	42	49
60	3	...	6	8	9	13	15	19	22	25	28	31	37	43
80	..	4	...	7	...	12	...	17	20	23	26	29	35	41
100	...	...	...	...	8	11	14	...	...	22	25	28	34	39
150	...	...	5	...	...	...	13	16	19	21	24	27	32	38
Rack.	2	...	...	6	7	10	12	15	17	20	22	25	30	34

Fig. 135.

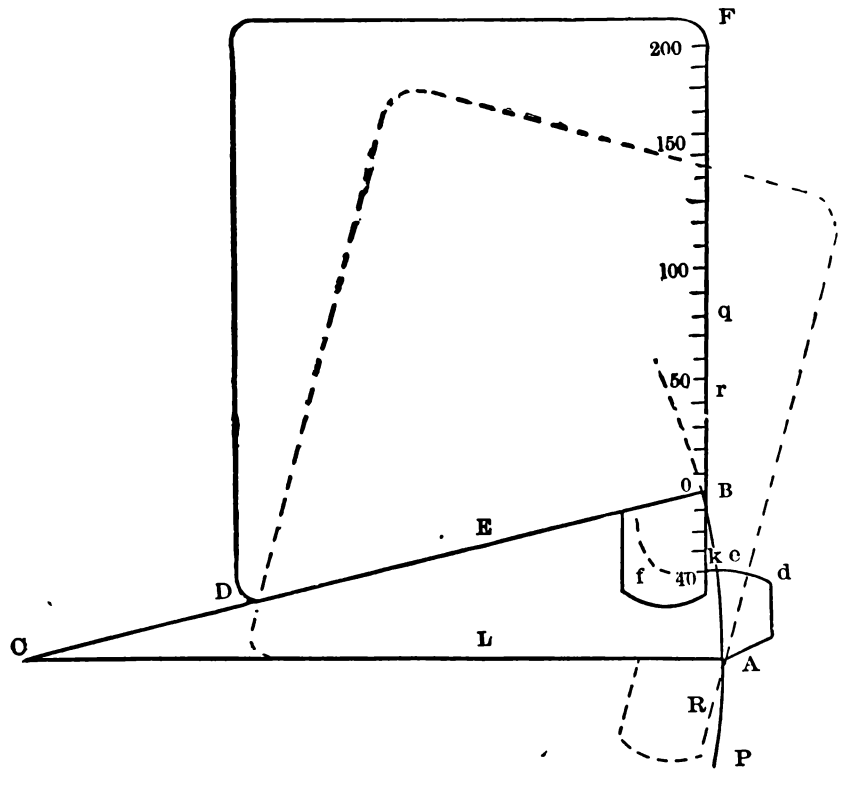

Fig. 136.

The requisite number on the graduated edge for pitches beyond 3½ (the greatest given in the tables), may be obtained by direct proportion from those given in the tables. Thus for 4 inch pitch, by doubling the numbers given for a 2 inch pitch, containing the same number of teeth, for 4½ inch pitch by doubling the numbers given for a 2¼ inch pitch. If the pitch be a fraction that cannot be so obtained, no serious error will be induced if the nearest number marked be taken.

An improved form of template odontograph, designed by Professor Robinson of the Illinois School of Industry, is shown in Fig. 137.

In this instrument the curved edge, having graduated lines, approaches more nearly to the curves produced by rolling circles than can be obtained from any system in which an arc of a circle is taken to represent the curve; hence, that edge is applied direct to the teeth and used as a template wherefrom to mark the curve. The curve is a logarithmic spiral, and the use of the instrument involves no other labor than that of setting it in position. The applicability of this curve, for the purpose, arises from two of its properties: first, that the involute of the logarithmic spiral is another like spiral, with poles in common; and, second, that the obliquity or angle between a normal and radius sector is constant, the latter property being possessed by this curve only. By the first property it is known that a line, lying tangent to the curve C E H, will be normal or perpendicular to

the curve C D B; so that when the line D E F is tangent to the pitch line, the curve A D B will coincide very closely with the true epicycloidal curve, or, rather, with that portion of it which is applied to the tooth curve of the wheel. By the second quality, all sectors of the spiral, with given angle at the poles, are similar figures which admit of the same degree of coincidence for all similar epicycloids, whether great or small, and nearly the same for epicycloids in general; thus enabling the application of the instrument to epicycloids in general.

To set the instrument in position for drawing a tooth face a table which accompanies the instrument is used. From this table a numerical value is taken, which value depends upon the diameters of the wheels, and the number of teeth in the wheel for which the curve is sought. This tabular value, when multiplied by the pitch of the teeth, is to be found on the graduated edge on the instrument A D B in Fig. 137. This done, draw the line D E F tangent to the pitch line at the middle of the tooth, and mark off the half thickness of the tooth, as E, D, either on the tangent line or the pitch line. Then place the graduated edge of the odontograph at D, and in such a position that the number and division found as already stated shall come precisely on the tangent line at D, and at the same time so set the curved edge H F C so that it shall be tangent to the tangent line, that is to say, the curved edge C H must just meet the tangent line at some one point, as at F in the figure. A line drawn coincident with the graduated edge will then mark the face curve required, and the odontograph may be turned over, and the face on the other side of the tooth marked from a similar setting and process.

For the flanks of the teeth setting numbers are obtained from a separate table, and the instrument is turned upside down, and the tangent line D F, Fig. 137, is drawn from the side of the tooth (instead of from the centre), as shown in Fig. 138.

It is obvious that this odontograph may be set upon a radial arm and used as a template, as shown in Fig. 126, in which case the instrument would require but four settings for the whole wheel, while rolling segments and the making of templates are entirely dispensed with, and the degree of accuracy is greater than is obtainable by means of the employment of arcs of circles.

The tables wherefrom to find the number or mark on the graduated edge, which is to be placed coincident with the tangent line in each case, are as follows:—

TABLE OF TABULAR VALUES WHICH, MULTIPLIED BY THE ARC PITCH OF THE TEETH, GIVES THE SETTING NUMBER ON THE GRADUATED EDGE OF THE INSTRUMENT.

Ratios*	Number of Teeth in Wheel Sought; or, Wheel for Which Teeth are Sought.																
	8	12	16	20	30	40	50	60	70	80	90	100	120	150	200	300	500
	For Faces: Flanks Radial or Curved. Draw Setting Tangent at Middle of Tooth.—Epicycloidal Spur or Bevel Gearing.																
1/12 = ·083	·32	·39	·46	·51													
1/4 = ·250	·31	·37	·44	·49	·61	·70	·78	·85	·92	·99	1·05	1·11	1·22	1·36	1·55	1·94	2·54
1/2 = ·500	·28	·34	·41	·46	·57	·66	·73	·80	·87	·93	1·00	1·06	1·15	1·29	1·50	1·86	2·41
2/3 = ·667	·27	·32	·38	·43	·54	·62	·70	·77	·83	·89	·95	1·01	1·11	1·24	1·45	1·79	2·32
1 . . .	·23	·28	·34	·39	·49	·58	·65	·72	·78	·83	·89	·94	1·03	1·15	1·36	1·65	2·10
3/2 = 1·50	·19	·25	·29	·34	·44	·51	·58	·64	·69	·74	·79	·84	·93	1·05	1·25	1·53	1·94
2 . . .	·17	·22	·26	·30	·38	·46	·53	·59	·63	·68	·72	·76	·84	·95	1·13	1·40	1·81
3 . . .		·16	·19	·23	·31	·38	·44	·49	·53	·57	·60	·63	·71	·82	·97	1·23	1·60
4 . . .		·14	·17	·20	·26	·33	·38	·42	·46	·49	·53	·56	·63	·73	·87	1·08	1·42
6 . . .					·22	·26	·30	·34	·37	·41	·44	·47	·53	·61	·71	·90	1·20
12 . . .						·20	·23	·25	·28	·30	·32	·34	·37	·42	·49	·60	·82
24 . . .											·19	·21	·23	·26	·31	·40	·57
Degree of Flank Curvature.	*For Flanks, when Curved.* Draw Setting Tangent at Side of Tooth.—Epicycloidal Spur and Bevel Gearing. Faces of Internal, and Flanks of Pinion Teeth.																
1·5 slight.	·77	·98	1·18	1·36	1·75	2·05	2·31	2·56	2·75	2·92	3·08	3·24	3·52	3·87	4·51	5·50	7·20
2 good.	·44	·54	·63	·72	·92	1·09	1·24	1·38	1·49	1·59	1·79	1·79	1·98	2·23	2·67	3·22	4·50
3 more.	·20	·28	·35	·40	·54	·65	·76	·86	·95	1·02	1·10	1·18	1·31	1·46	1·67	2·08	2·76
4 much.		·20	·23	·25	·34	·42	·51	·59	·66	·71	·77	·82	·92	1·06	1·25	1·64	2·15
6 . . .			·16	·17	·26	·32	·38	·43	·48	·52	·56	·60	·66	·76	·93	1·20	1·54
12 . . .					·19	·24	·28	·31	·34	·36	·38	·40	·45	·52	·63	·80	·98
24 . . .												·22	·25	·28	·33	·47	·60
	For Faces of Racks, and of Pinions for Racks and Internal Gears; for Flanks of Internal and Sides of Involute Teeth. Draw Setting Tangent at Middle of Tooth, regarding Space as Tooth in Internal Teeth. For Rack use Number of Teeth in Pinion.																
Pinion.	·31	·39	·48	·57	·73	·88	1·00	1·10	1·20	1·30	1·40	1·48	1·65	1·85	2·15	2·65	3·50
Rack.	·32	·38	·44	·50	·62	·72	·80	·87	·93	·99	1·03	1·08	1·16	1·27	1·49	1·86	2·44

* These ratios are obtained by dividing the radius of the wheel sought by the diameter of the generating circle.

From these tables may be found a tabular value which, multiplied by the pitch of the wheel to be marked (as stated at the head of the table), will give the setting number on the graduated edge of the instrument, the procedure being as follows:—

For the teeth of a pair of wheels intended to gear together only (and not with other wheels having a different number of teeth).

For the face of such teeth where the flanks are to be radial lines.

Rule.—Divide the pitch circle radius of the wheel to have its teeth marked by the pitch circle radius of the wheel with which it is to gear: or, what is the same thing, divide the number of teeth in the wheel to have its teeth marked by the number of teeth in the wheel with which it is to gear, and the quotient is the "ratio." In the ratio column find this number, and look along that line, and in the column at the head of which is the number of teeth contained in the wheel to be marked, is a number termed the tabular value, which, multiplied by the arc pitch of the teeth, will give the number on the graduated edge by which to set the instrument to the tangent line.

Example.—What is the setting number for the face curves of a wheel to contain 12 teeth, of 3-inch arc pitch, and to gear with a wheel having 24 teeth?

Here number of teeth in wheel to be marked = 12, divided by the number of teeth (24) with which it gears; 12 ÷ 24 = ·5. Now in column of ratios may be found 1/2 = 500 (which is the same thing as ·5), and along the same horizontal line in the table, and in the column headed 12 (the number of teeth in the wheel) is found ·34. This is the tabular value, which, multiplied by 3 (the arc

pitch of the teeth), gives 1·02, which is the setting number on the graduated edge. It will be noted, however, that the graduated edge is marked 1, 2, 3, &c., and that between each consecutive division are ten subdivisions; hence, for the decimal ·02 an allowance may be made by setting the line 1 a proportionate amount below the tangent line marked on the wheel to set the instrument by.

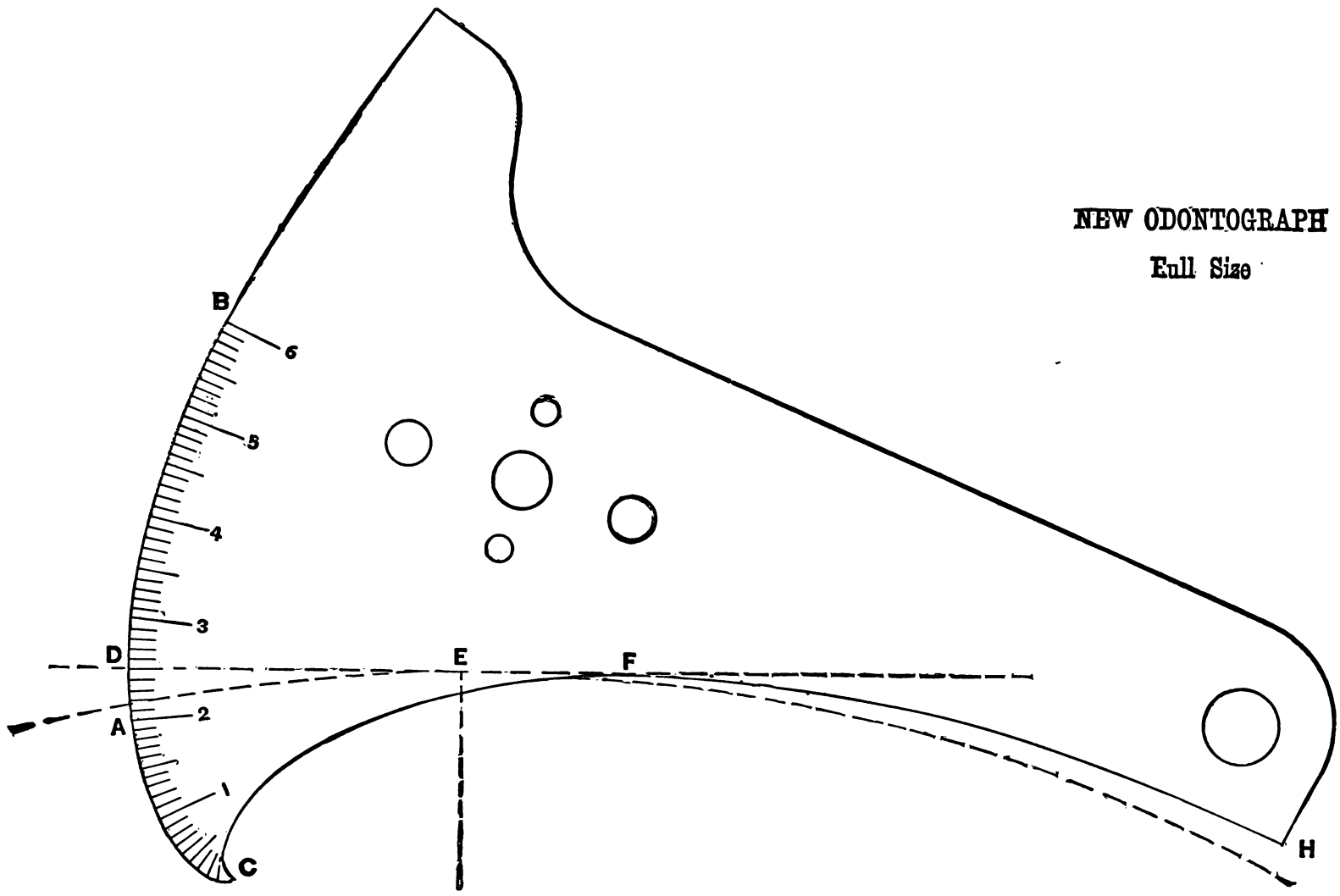

Fig. 137.

Required now the setting number for the wheel to have the 24 teeth.

Here number of teeth on the wheel = 24, divided by the number of teeth (12) on the wheel with which it gears; $24 \div 12 = 2$. Now, there is no column in the "number of teeth sought" for 24 teeth; but we may find the necessary tabular value from the columns given for 20 teeth and 30 teeth, thus:—opposite ratio 2, and under 20 teeth is given ·30, and under 30 teeth is given ·38—the difference between the two being ·08. Now the difference between

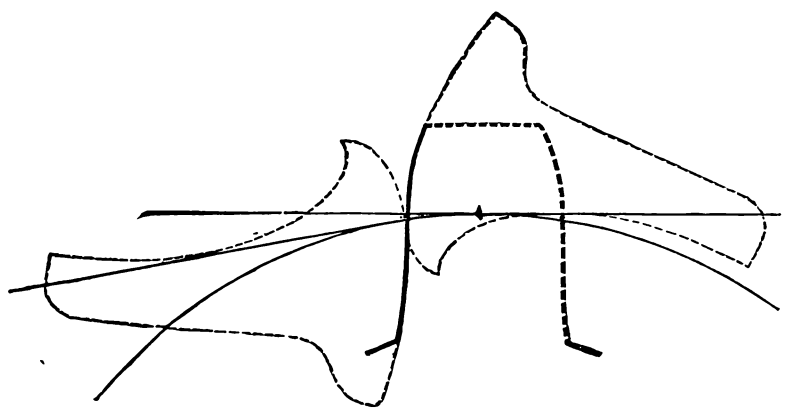

Fig. 138.

20 teeth and 24 teeth is $\frac{4}{10}$; hence, we take $\frac{4}{10}$ of the ·08 and add it to the tabular value given for 20 teeth, thus: $·08 \times 4 \div 10 = ·032$, and this added to ·30 (the tabular value given for 20 teeth = ·33, which is the tabular value for 24 teeth The ·33 multiplied by arc pitch (3) gives ·99. This, therefore, is the setting number for the instrument, being sufficiently near to the 1 on the graduated edge to allow that 1 to be used instead of ·99.

It is to be noted here that the pinion, having radial lines, the other wheel must have curved flanks; the rule for which is as follows:—

CURVED FLANKS FOR A PAIR OF WHEELS.

Note.—When the flanks are desired to be curved instead of radial, it is necessary to the use of the instrument to select and assume a value for the degree of curve, as is done in the table in the column marked "Degree for flank curving;" in which

1·5 slight—a slight curvature of flank.
2 good—an increased curvature of flank.
3 more—a degree of pronounced spread at root.
4 much—spread at root is a distinguishing feature of tooth form.
6—still increased spread in cases where the strength at root of pinion is of much importance to give strength.
12—as above, under aggravated conditions.
24—undesirable (unless requirement of strength compels this degree), because of excessive strain on pinion.

Rule.—For faces of teeth to have curved flanks.

Divide the number of teeth in the wheel to be marked by the number of teeth in the wheel with which it gears, and multiply by the degree of flank curve selected for the wheel with which that to be marked is to gear, and this will give the ratio. Find this number in ratio column, and the tabular number under the column of number of teeth of wheel to be marked; multiply tabular number so found by arc pitch of wheel to be marked, and the product will be the setting number for the instrument.

Example.—What is the setting number on the graduated edge of the odontograph for the faces of a wheel (of a pair) to contain 12 teeth of 2-inch arc pitch, and to gear with a wheel having 24 teeth and a flank curvature represented by 3 in "Degree of flank curving" column?

Here teeth in wheel to be marked (12) divided by number of teeth in the wheel it is to gear with (24), $12 \div 24 = ·5$, which multiplied by 3 (degree of curvature selected for flanks of 24-teeth wheel), $·5 \times 3 = 1·5$. In column of ratio numbers find 1·5, and in 12-teeth column is ·25, which multiplied by pitch (2) gives ·5 as the setting number for the instrument; this being the fifth line on the instrument, and half way between the end and mark 1.

For Curved Flanks.

Rule.—Assume the degree of curve desired for the flanks to be marked, select the corresponding value in the column of "Degrees of flank curving," and find the tabular value under the number of teeth column.

Multiply tabular value so found by the arc pitch of the teeth, and the product is the setting number on the instrument.

Example.—What is the setting number on the odontograph for the flanks of a wheel to contain 12 teeth and gear with one having 24 teeth, the degree of curvature for the flanks being represented by 4 in the column of "Degree of flank curvature?"

Here in column of degrees of flank curvature on the 3 line and under 12 teeth is ·20, which multiplied by pitch of teeth (2) is ·20 × 2 =40, or $\frac{4}{10}$; hence, the fourth line of division on the curved corner is the setting line, it representing $\frac{4}{10}$ of 1.

Both for the faces and flanks, the second number is obtained in *precisely* the same manner for every wheel in the set, except that instead of 10 the number of teeth in each wheel must be substituted.

Rack and Pinion.—*For radial flanks* use for faces the two lower lines of table. *For curved flanks* find tabular value for pinion faces in lowest line. For flanks of pinion choose degree of curving, and find tabular value under "flanks," as for other wheels. For faces of rack divide number of teeth in pinion by degree of curving, which take for number of teeth in looking opposite "rack." Flanks of rack are still parallel, but may be arbitrarily curved beyond half way below pitch line.

Internal Gears.—For tooth curves within the pitch lines,

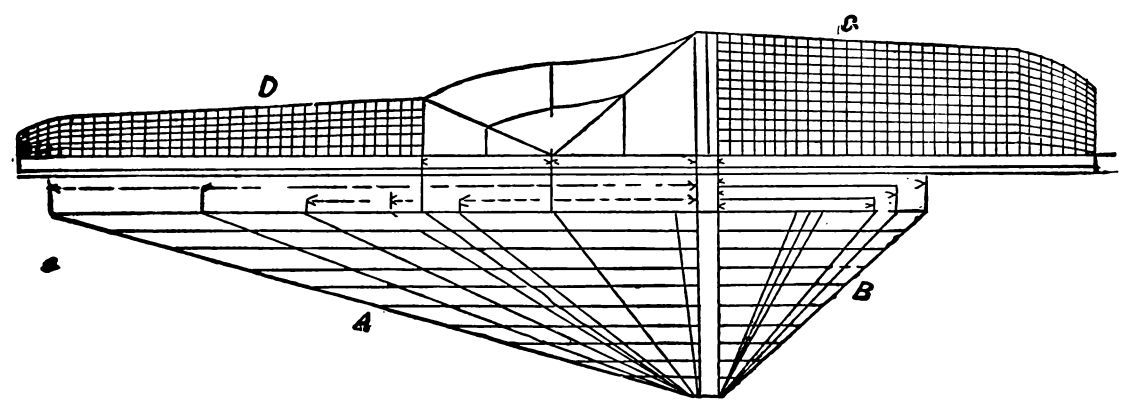

Fig. 139.

For Interchangeable Gearing (that is, a Train of Gears any one of which will work correctly with any other of the same set).

Rule—both for the faces and for the flanks. For each respective wheel divide the number of teeth in that wheel by some one number not greater than the number of teeth in the smallest wheel in the set, which gives the ratio number for the wheel to be marked. On that line of ratio numbers, and in the column of numbers of teeth, find the tabular value number; multiply this by the arc pitch of the wheel to be marked, and the product is the setting number of the instrument.

Example.—A set of wheels is to contain 10 wheels; the smallest is to contain 12 teeth; the arc pitch of the wheels is four inches. What is the setting number for the smallest wheel?

Here number of teeth in smallest wheel of set is 10; divide this by any number smaller than itself (as say 5), 10 ÷ 5 = 2 = the ratio number on ratio line for 2; and under column for 12 is ·17, which is the tabular value, which multiplied by pitch (4) is ·17 × 4 = 68, or $\frac{6}{10}$ and $\frac{8}{100}$; hence, the instrument must be set with its seventh line of division just above the tangent line marked on the wheel. It will be noted that, if the seventh line were used as the setting, the adjustment would be only the $\frac{2}{100}$ of a division out, an amount scarcely practically appreciable.

divide radius of each wheel by any number not greater than radius of pinion, and look in the table under "flanks." For curves outside pitch line use lower line of table; or, divide radii by any number and look under "faces." In applying instrument draw tangents at middle and side of *space*, for internal teeth.

Involute Teeth.—For tabular values look opposite "Pinion," under proper number of teeth, for each wheel. Draw setting tangent from "base circle" of involute, at middle of tooth. For this the instrument gives the whole side of tooth at once.

In all cases multiply the tabular value by the pitch in inches.

Bevel-Wheels.—Apply above rules, using the developed normal cone bases as pitch lines. For right-angled axes this is done by using in place of the actual ratio of radii, or of teeth numbers, the square of that ratio; and for number of teeth, the actual number multiplied by the square root of one plus square of ratio or radii; the numerator of ratio, and number of teeth, belonging to wheel sought.

When the first column ratio and teeth numbers fall between those given in the table, the tabular values are found by interpolating as seen in the following examples:

Examples of Tabular Values and Setting Numbers.

Take a pair of 16 *and* 56 *teeth; radii* 5·09 *and* 17·82 *inches respectively; and* 2 *inches pitch.*

Kind of Gearing.	Number of Teeth.	Kind of Flank.	Ratio Radii.	First Column Ratio.		Tab. Val.	
				Flank.	Face.	Flank.	Face.
Epicycloidal, Radial Flanks.	Small	Radial	·29	Radial	·29	..	·44
	Large	Radial	3·5	Radial	3·5	..	·44
Epicycloidal. Curved Flanks.	Small	Curved 2 deg.	·29	2	·87	·63	·36
	Large	Curved 3 deg.	3·5	3	7·	·82	·30
Epicycloidal, Interchange'bl.	Small	"Sets," Divide	2·	2	2·	·63	·26
	Large	Radii by 2.55	7·	7	7·	·40	·30
Epicycloidal, Internal.	Pinion	Curved 2 deg.		2	Pinion	·63	·44
	Wheel	Int. face 7 deg.	3·5	Pinion	7*	·84	·39
Epicycloidal, Rack & Pinion.	Pinion	Curved 2 deg.		2	Pinion	·63	·44
	Rack	Parallel		Parallel	Rack	..	·31
Involute Gearing.	Small	Face and Flank		Pinion.		·44	
	Large	One Curve		Pinion.		·84	

* The face being here internal, the tabular value is to be found under "flanks."
If bevels, use ratio radii ·082 and 12·25; and teeth numbers 16·6 and 203·8 respectively.

Walker's Patent Wheel Scale.—This scale is used in many manufactories in the United States to mark off the teeth for patterns, wherefrom to mould cast gears, and consists of a diagram from which the compasses may be set to the required radius to strike the curves of the teeth.

The general form of this diagram is shown in Fig. 139. From

the portion A the length of the teeth, according to the pitch, is obtained. From the portion B half the thickness of the tooth at the pitch line is obtained. From the part C half the thickness of the root is obtained, and from the part D half the thickness at the point is obtained.

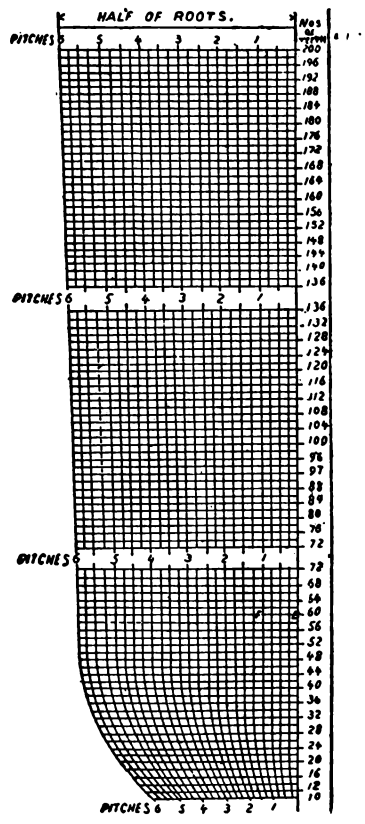

Fig. 140.

Each of these parts is marked with the number of teeth the wheel is to contain, and with the pitch of the teeth, as shown in Fig. 140, which represents part C half size. Now suppose it is required to find the thickness at the root, for a tooth of a wheel having 60 teeth of one inch pitch, the circles from the point A, pitch line B, and root C being drawn, and a radial line representing the middle of the tooth being marked, as is shown in Fig. 142, the compass points are set (on a full size scale) to the distance F B, Fig. 140, F being at the junction of line 1 with line 60; the compasses are then rested at G, and the points L, M are marked. Then, from the

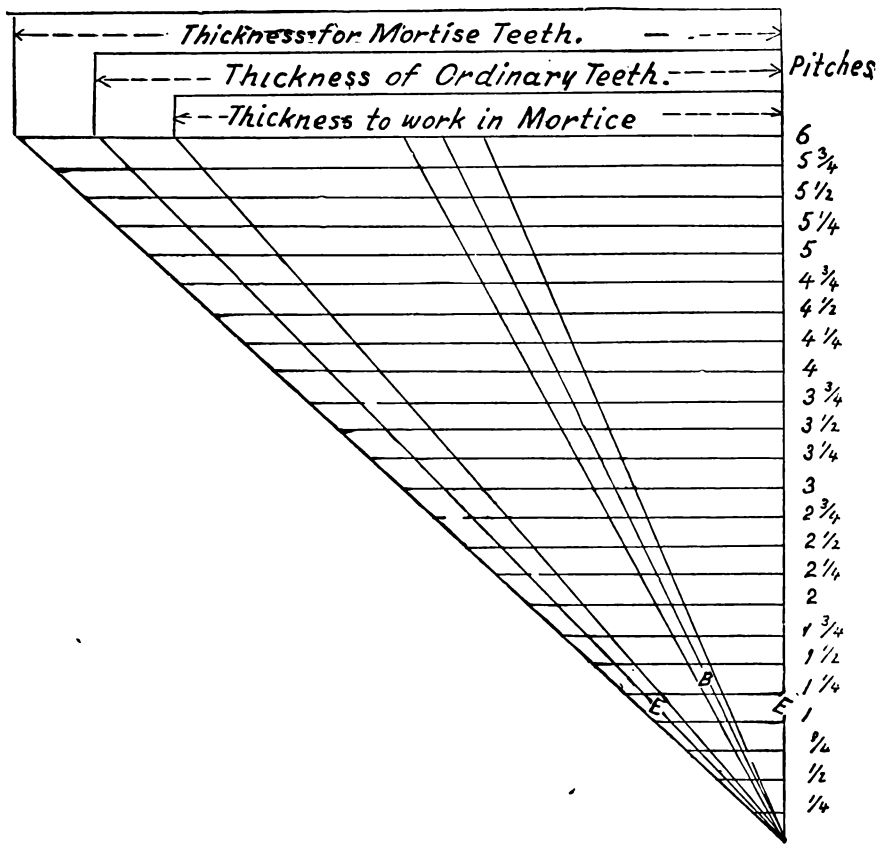

Fig. 141.

portion B, Fig. 139 of the diagram, which is shown full size in Fig. 141, the compasses may be set to the thickness at the pitch circle, as in this case (for ordinary teeth) from E to E, and with half this distance, the points J, K, Fig. 142, are marked. By a reference to the portion D of the diagram, half the thickness of the point is obtained, and marked as at I, H in Fig. 142. It now remains to set compasses to the radius for the face and that for the flank curves, both of which may be obtained from the part A of the diagram. The locations of the centres, wherefrom to strike these curves, are obtained as in Fig. 142. The compasses set for the face curve are rested at H, and the arc N is struck; they are then rested at J and the arc O struck; and from the intersection of N, O, as a centre, the face curve H J is marked.

The compasses set to the flank radius are then rested at M, and the arc P is marked and rested at K to mark the arc Q; and from the intersection of P, Q as a centre, the flank curve K M is marked; that on the other side of the tooth being marked in a similar manner.

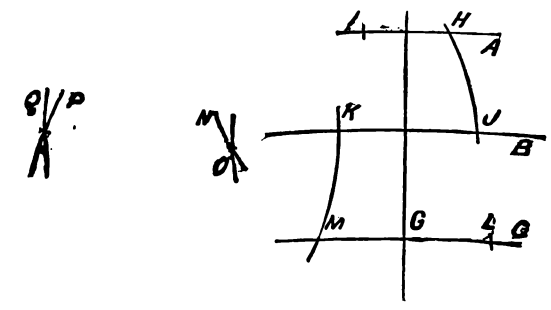

Fig. 142.

An excellent scale for giving the relations of pitch, number of teeth, and radius of gear wheels having diametral pitch, has been designed by Mr. George H. Smith of Providence, R. I., and is shown in Fig. 142*a*. There are a set of division lines on each side of the zero line O, and the first line for each set of divisions is at a distance of ten divisions from the zero line. Thus, letting the scale shown in the figure be for 8 diametral pitch, each space in each set, A and B, is one-sixteenth inch, and from the zero line to the first line of each set, the distance is ten-sixteenths of an inch. To help in reading they are numbered in tens. On each side of zero there is a line distant from zero equal to the addendum or face of a tooth; this distance is often designated by $s + f$, and for 8 pitch it is .145 inch. Near the zero line is a sketch of a few teeth of 8 pitch, in which the length of face is shown at S, the flank at $s + f$, and the thickness of teeth on the pitch line at t. These sizes are also given in a little table near the sketch.

Of the three things—the diameter, the pitch, and the number of teeth—two must be known in order to figure the parts of a gear. The sketch of tooth sizes on each scale helps to choosing the pitch. In using the scale, the zero line corresponds to a point in a pitch circle; or, in the case of two gears in mesh, to the common point of the two pitch circles, and a line of set, A, or B, corresponds to the centre of a gear; or, in the case of two gears in mesh, a line of one of the sets corresponds to the centre of one gear, and a line of the other set to the centre of the other gear. Having decided upon a few things in regard to two gears the scale helps to determine the rest. For example, suppose that we decide that two gears shall have 8 pitch, one 12, and the other 18 teeth, that the centres shall be in the line A B, and that the centre of the twelve-tooth gear be at C. We place the edge of the 8-pitch scale upon the line A B, letting a twelfth division line, as figured, come upon the point C. Now the zero line determines the common point of the two pitch circles, and the eighteenth division line, on the other side of zero, determines the centre of the eighteen-tooth gear. The two s, s, or addendum lines, one on each side of zero, determine points in the addendum or outside circles. In the figure the outside circles are shown, but not the working depth circles. The $s + f$ or flank lines, one on each side of zero, determine points in the whole depth circles; these circles are shown.

Example: Suppose that we decide that two gears shall have 8-pitch, and that the distance between their centres, as at O and X, shall be three and one-eighth inches, or fifty-sixteenths of an inch. We place the edge of the scale upon the points O and X, and at once see that between them there are fifty divisions of the scale, which

means that the sum of the teeth in both gears will be fifty. Now we can move the scale endwise, keeping the edge upon O and X, with the zero between, and the zero line will determine the common point of the pitch circles of any two 8-pitch gears in mesh, whose centres are at O and X, and the respective lines in A and B will indicate the number of teeth in each of the two gears. In the position that the scale now is, the zero line determines the common point in the pitch circles of gears, one of twenty teeth, and the other of thirty.

As a third example, suppose that we decide to have the centres of two 8-pitch gears at C and D, and that the gear whose centre is

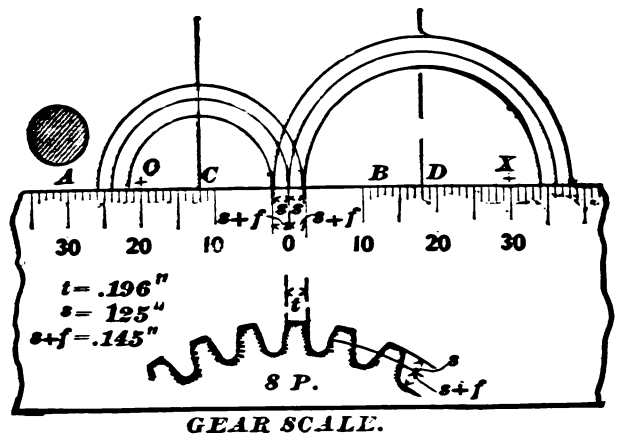

GEAR SCALE.

Fig. 142a

at C must clear a shaft or obstruction shown in section at A. By swinging the scale around we can determine the largest gear that will clear A. Obviously it cannot be much larger than the 12-tooth gear now shown; possibly it can have thirteen teeth, in which case the gear on D will have seventeen teeth.

A convenient length of scale is one hundred divisions each way from zero, two hundred in all.

The term "Clearance," as applied to gear-wheel teeth, means the amount of space between gear teeth when in mesh; or, in other words, the difference between the width of the teeth and that of the spaces between the teeth.

This clearance exists at the sides of the teeth, as in Fig. 143, at A, and between the tops of the teeth, and the bottoms or roots of the spaces, as at B. When, however, the simple term "clearance" is employed it implies the side clearance, as at A, the clearance at B being usually designated as top and bottom clearance.

Clearance is necessary for two purposes: First, in teeth cut in a machine to accurate form and dimensions, to prevent the teeth of one wheel from binding in the spaces of the other; and, second, in cast teeth, to allow for the imperfections in the teeth which are incidental to casting in a founder's mould. In machine-cut teeth the amount of clearance is a minimum.

In wheels which are cast with their teeth complete and on the pattern, the amount of clearance must be a maximum, because, in the first place, the teeth on the pattern must be made taper to enable the extraction of the pattern from the mould without damage to the teeth in the mould; and the amount of this taper must be greater than in machine-moulded teeth, because the pattern cannot be lifted so truly vertical by hand as to avoid, in all cases, damage to the mould.

It is obvious that by reason of this taper each wheel is larger in diameter on one side than on the other; hence, to preserve the true curves to the teeth, the pitch circle is made correspondingly smaller. But if in keeping the wheels to their shafts the two large diameters of a pair of wheels be placed to work together, the teeth of the pair would have contact on that side of the wheel only; and to avoid this and give the teeth contact across their full breadth the wheels are so placed on their shafts that the large diameter of one shall work with the small one of the other, the amount of taper being the same in each wheel, irrespective of their relative diameters.

In extracting a pattern from the mould by hand, it is rapped to force back the sand of the mould, and loosen the pattern, so that it may be taken out without breaking the mould. In ordinary practice the amount of this rapping is left entirely to the judgment of the moulder, who has nothing to guide him in securing an equal amount of pattern movement in each direction in the mould; hence, the finished mould may be of increased radius at the circumference in the direction in which the wheel moved most during the rapping. Again, the wood pattern is apt in time to shrink and become out of round, while even iron patterns are not entirely free from warping. Again, the cast metal is liable to contract, in cooling, more in one direction than in another. The amount of clearance usually allowed for pattern-moulded cast gearing is given by Professor Willis as follows: Whole depth of tooth $\frac{7}{10}$, of the pitch working depth $\frac{6}{10}$; hence $\frac{1}{10}$ the pitch is allowed for top and bottom clearance, and this is the amount shown at B in Fig. 143. The amount of side clearance given by Willis as that ordinarily found in practice is as follows: Thickness of tooth $\frac{5}{11}$ of the pitch; breadth of space $\frac{6}{11}$; hence, the side clearance equals $\frac{1}{11}$ of the pitch, which in a 3-inch pitch equals .27 of an inch in each wheel. Calling this in round figures, which is near enough for our purpose, $\frac{1}{4}$ inch, we have thickness of tooth $1\frac{1}{4}$, width of space $1\frac{3}{4}$, or $\frac{1}{2}$ inch of clearance in a 3-inch pitch, an amount which on wheels of coarse pitch is evidently more than that necessary in view of the accuracy of modern moulding, however suitable it may have been for the less perfect practice of Professor Willis's time. It is to be observed that the rapping of the pattern in the founder's mould reduces the thickness of the teeth and increases the width of the spaces somewhat, and to that extent augments the amount of side clearance allowed on the pattern; and the amount of clearance thus obtained would be nearly sufficient for a small wheel, as say of two inches diameter. It is further to be observed that the amount of rapping is not proportionate to the diameter of the wheel; thus, in a wheel of two inches diameter, the rapping would increase the size of the mould about $\frac{1}{32}$ inch. But in the proportion of $\frac{1}{32}$ inch to every two inches of diameter, the rapping on a 6-foot wheel would amount to $1\frac{1}{16}$ inches, whereas, in actual practice, a 6-foot wheel would not enlarge the mould more than at most $\frac{1}{8}$ inch from the rapping.

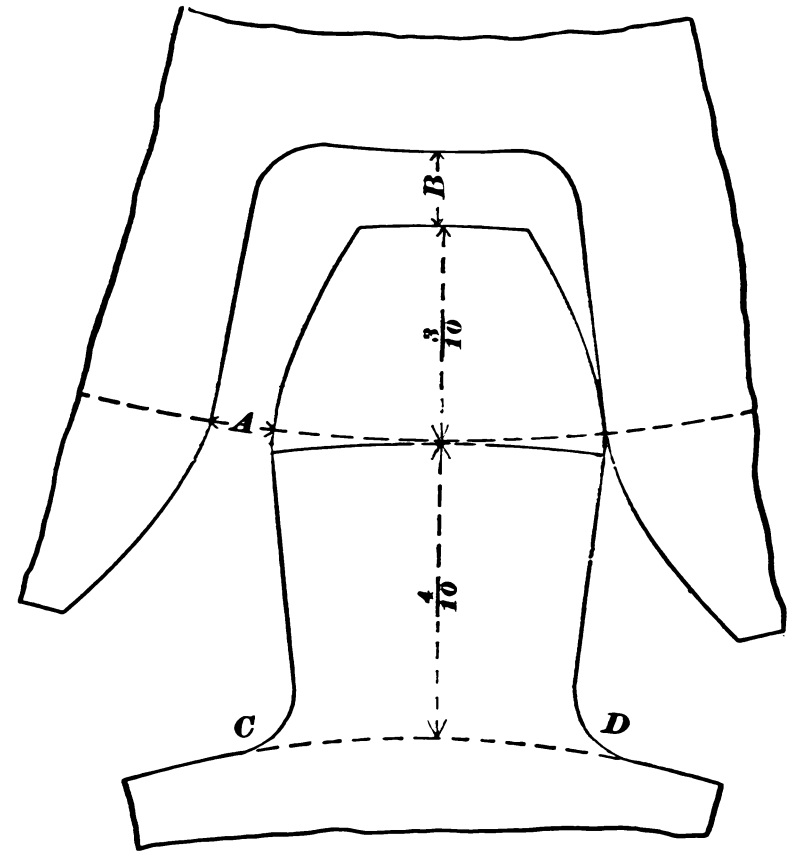

Fig. 143.

It is obvious, then, that it would be more in accordance with the requirements to proportion the amount of clearance to the diameter of the wheel, so as to keep the clearance as small as possible. This will possess the advantage that the teeth will be stronger, it being obvious that the teeth are weakened both from the loss of thickness and the increase of height due to the clearance.

It is usual in epicycloidal teeth to fill in the corner of the root of the tooth with a fillet, as at C D in Fig. 143, to strengthen it.

This is not requisite when the diameter of the generating circle is so small in proportion to the base circle as to produce teeth that are spread at the roots; but it is especially advantageous when the teeth have radial flanks, in which case the fillets may extend

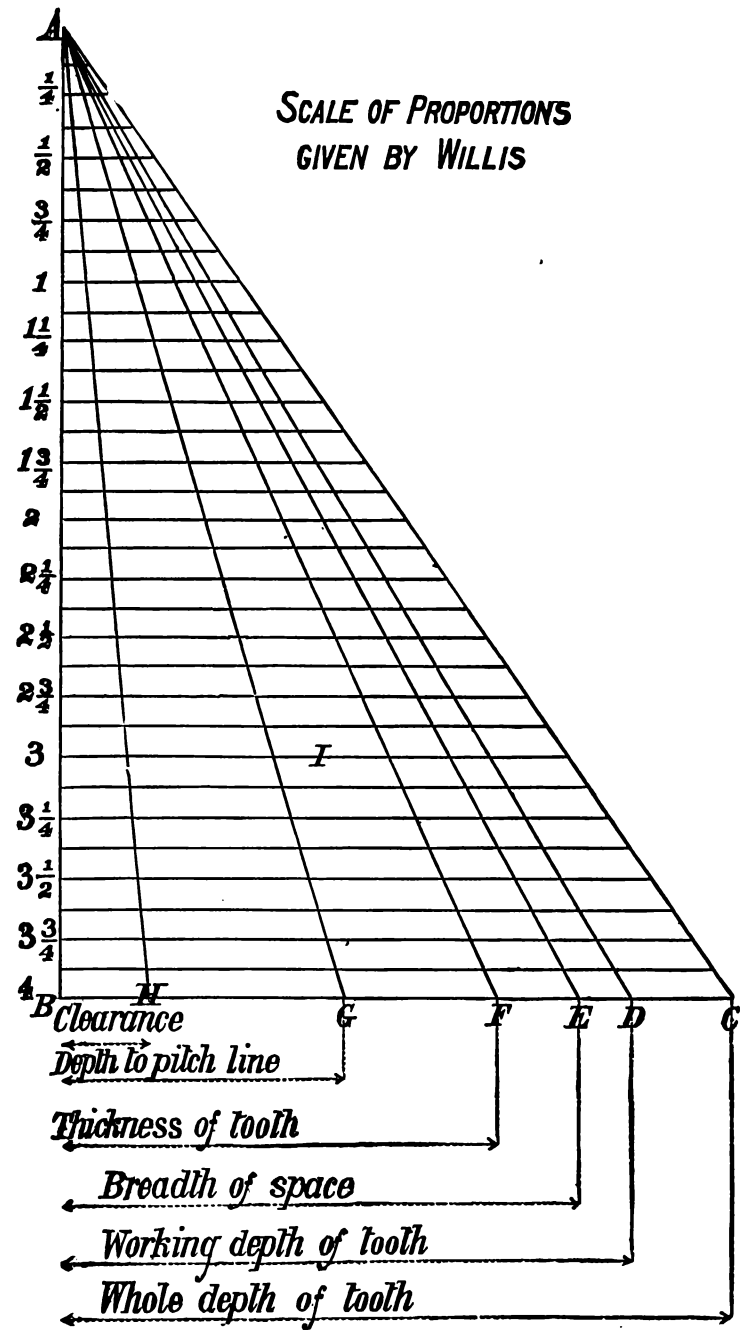

Fig. 144.

farther up the flanks than when they are spread; because, as shown in Fig. 47, the length of operative flank is a minimum in teeth having radial flanks, and as the smallest pinion in the set is that with radial flanks, and further as it has the least number of teeth in contact, it is the weakest, and requires all the strengthening that the fillets in the corners will give, and sometimes the addition of the flanges on the sides of the pinion, such gears being termed "shrouded."

The proportion of the teeth to the pitch as found in ordinary practice is given by Professor Willis as follows:—

Depth to pitch line	. .	$\frac{3}{10}$ of the pitch.
Working depth	. .	$\frac{6}{10}$,, ,,
Whole depth	. .	$\frac{7}{10}$,, ,,
Thickness of tooth	. .	$\frac{6}{11}$,, ,,
Breadth of space	. .	$\frac{6}{11}$,, ,,

The depth to pitch line is, of course, the same thing as the height of the addendum, and is measured through the centre of the tooth from the point to the pitch line in the direction of a radial line and not following the curve of tooth face.

Referring to the working depth, it was shown in Figs. 42 and 44 that the height of the addendum remaining constant, it varies with the diameter of the generating circle.

From these proportions or such others as may be selected, in which the proportions bear a fixed relation to the pitch, a scale may be made and used as a gauge, to set the compasses by, and in marking off the teeth for any pitch within the capacity of the scale. A vertical line A B in Fig. 144, is drawn and marked off in inches and parts of an inch, to represent the pitches of the teeth; at a right angle to A B, the line B C is drawn, its length equalling the whole depth of tooth, which since the coarsest pitch in the scale is 4 inches will be $\frac{7}{10}$ of 4 inches. From the end of line C we draw a diagonal line to A, and this gives us the whole depth of tooth for any pitch up to 4 inches: thus the whole depth for a 4-inch pitch is the full length of the horizontal line B C; the whole depth for a 3-inch pitch will be the length of the horizontal line running from the 3 on line A B, to line A C on the right hand of the figure; similarly for the full depth of tooth for a 2-inch pitch is the length of the horizontal line running from 2 to A C. The working depth of tooth being $\frac{6}{10}$ of the pitch a diagonal is drawn from A meeting line C at a distance from B of $\frac{6}{10}$ of 4 inches and we get the working depth for any other pitch by measuring (along the horizontal line corresponding to that pitch), from the line of pitches to the diagonal line for working depth of tooth. The thickness of tooth is $\frac{5}{11}$ of the pitch and its diagonal is distant $\frac{5}{11}$ of 4 (from B) on line B C, the thickness for other pitches being obtained on the horizontal line corresponding to those pitches as before.

The construction of a pattern wherefrom to make a foundry mould, in which to cast a spur gear-wheel, is as shown in section, and in plan of Fig. 145. The method of constructing these patterns depends somewhat on their size. Large patterns are constructed with the teeth separate, and the body of the wheel is built of separate pieces, forming the arms, the hub, the rim, and the teeth respectively. Pinion patterns, of six inches and less in diameter, are usually made out of a solid piece, in which case the grain of the wood must lie in the direction of the teeth height. The chuck or face plate of the lathe, for turning the piece, must be of smaller diameter than the pinion, so that it will permit access to a tool applied on both sides, so as to strike the pitch circle on both sides. A second circle is also struck for the roots

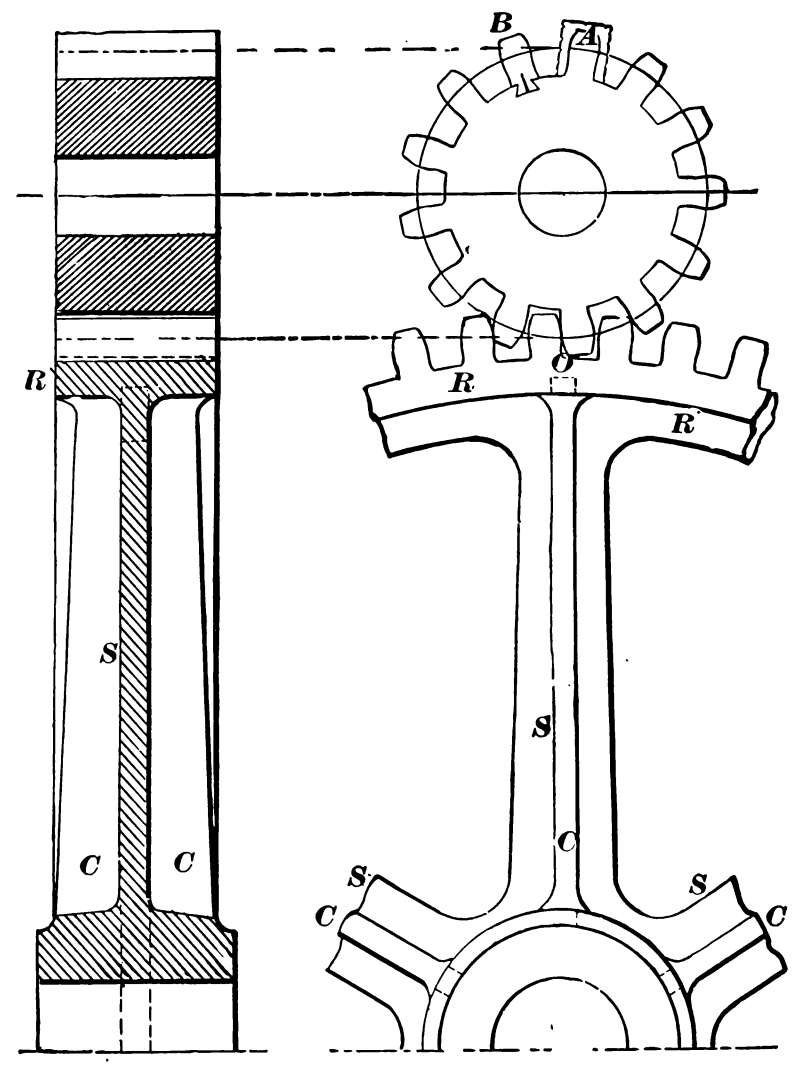

Fig. 145.

or depths of the teeth, and also, if required, an extra circle for striking the curves of the teeth with compasses, as was described in Fig. 130. All these circles are to be struck on both sides of the pattern, and as the pattern is to be left slightly taper, to

permit of its leaving the mould easily, they must be made of smaller diameter on one side than on the other of the pattern; the reduction in diameter all being made on the same side of the pattern. The pinion body must then be divided off on the pitch

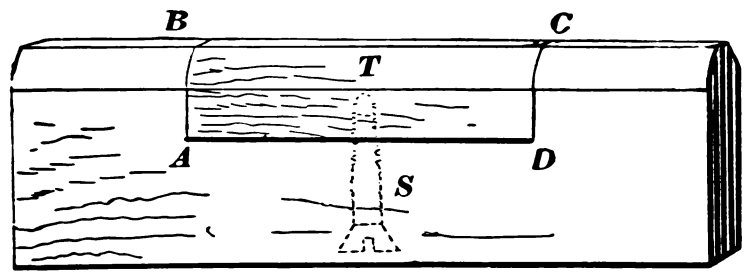

Fig. 146.

line into as many equal divisions as there are to be teeth in it; the curves of the teeth are then marked by some one of the methods described in the remarks on curves of gear-teeth. The top of the face curves are then marked along the points of the teeth by means of a square and scribe, and from these lines the curves are marked in on the other side of the pinion, and the spaces cut out, leaving the teeth projecting. For a larger pinion, without arms, the hub or body is built up of courses of quadrants, the joints of the second course *breaking joint* with those of the first.

The quadrants are glued together, and when the whole is formed and the glue dry, it is turned in the lathe to the diameter of the wheel at the roots of the teeth. Blocks of wood, to form the teeth, are then planed up, one face being a hollow curve to fit the circle of the wheel. The circumference of the wheel is divided, or pitched off, as it is termed, into as many points of equal division as there are to be teeth, and at these points lines are drawn, using a square, having its back held firmly against the radial face of the pinion, while the blade is brought coincidal with the point of division, so as to act as a guide in converting that point into a line running exactly true with the pinion. All the points of division being thus carried into lines, the blocks for the teeth are glued to the body of the pinion, as denoted by A, in Fig. 145. Another method is to dovetail the teeth into the pinion, as in Fig. 145 at B. After the teeth blocks are set, the process is, as already described, for a solid pinion.

The construction of a wheel, such as shown in Fig. 145, is as follows: The rim R must be built up in segments, but when the courses of segments are high enough to reach the flat sides of the arms they should be turned in the lathe to the diameter on the inside, and the arms should be let in, as shown in the figure at O. The rest of the courses of segments should then be added. The arms are then put in, and the inside of the segments last added may then be turned up, and the outside of the rim turned. The hub should then be added, one-half on each side of the arms, as in the figure. The ribs C of the arms are then added, and the body is completed (ready to receive the teeth), by filleting in the corners. An excellent method of getting out the teeth is as follows: Shape a piece of hard wood, as in Fig. 146, making it some five or six inches longer than the teeth, and about three inches deeper, the thickness being not less than the thickness of the required teeth at the pitch line. Parallel to the edge B C, mark the line A D, distant from B C to an amount equal to the required depth of tooth. Mark off, about midway of the piece, the lines A B and C D, distant from each other to an amount equal to the breadth of the wheel rim, and make two saw cuts to those lines. Take a piece of board an inch or two longer than the radius of the gear-wheel and insert a piece of wood (which is termed a box) tightly into the board, as shown in Fig. 147, E representing the box. Let the point F on the board represent the centre of the wheel, and draw a radial line R from F through the centre of the box. From the centre F, with a trammel, mark the addendum line G G, pitch line H I, and line J K for the depth of the teeth (and also a line wherefrom to strike the teeth curves, as shown in Fig. 129 if necessary). From the radial line R, as a centre, mark off on the pitch circle, points of division for several teeth, so as to be able to test the accuracy of the spacing across the several points, as well as from one point to the next, and mark the curves for the teeth on the end of the box, as shown. Turn the box end for end in the board, and mark out a tooth by the same method on the other end of the box. The box being removed from the board must now have its sides planed to the lines, when it will be ready to shape the teeth in. The teeth are got out for length, breadth, and thickness at the pitch line as follows: The lumber from which they are cut should be very straight grained, and should be first cut into strips of a width and thickness slightly greater than that of the teeth at the pitch line. These strips (which should be about two feet long) should then be planed down on the sides to very nearly the thickness of the tooth at the pitch line, and hollow on one edge to fit the curvature of the wheel rim. From these strips, pieces a trifle longer than the breadth of the wheel rim are cut, these forming the teeth. The pieces are then planed on the ends to the exact width of the

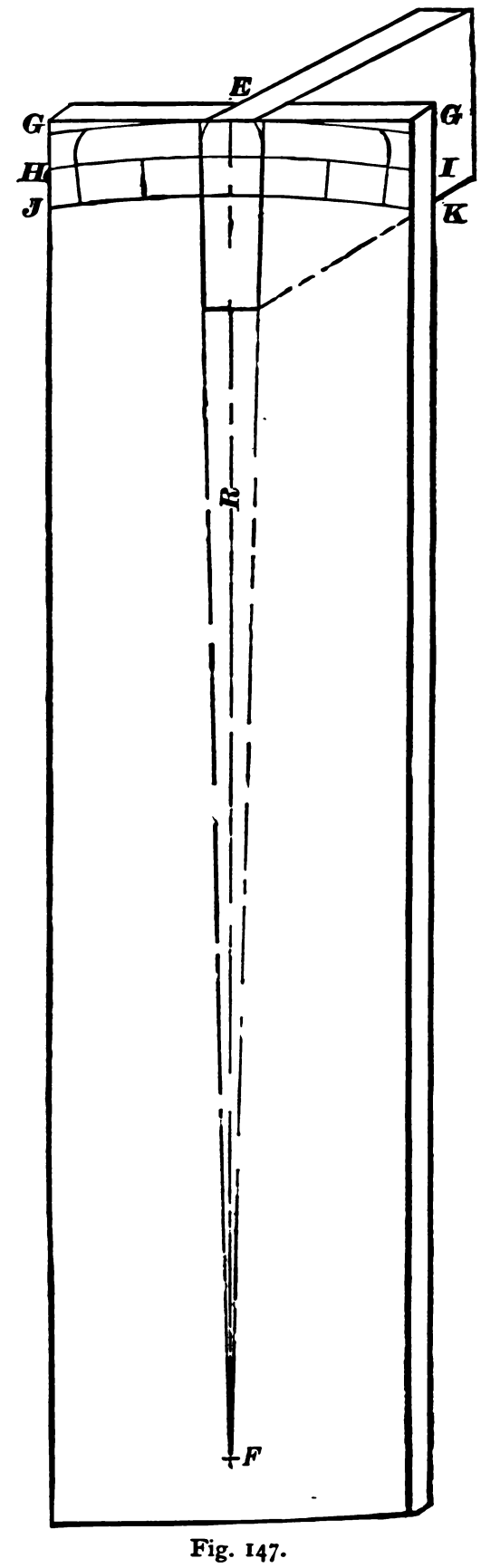

Fig. 147.

wheel rim. To facilitate this planing a number of the pieces or blank teeth may be set in a frame, as in Figs. 148 and 149, in which A is a piece having the blocks B B affixed to it. C is a clamp secured by the screws at S S, and 1, 2, 3, 4, 5, 6 are the ends of the blank teeth. The clamp need not be as wide as the

teeth, as in Fig. 148, but it is well to let the pieces A and B B equal the breadth of the wheel rim, so that they will act as a template to plane the blank teeth ends to. The ends of B B may be blackleaded, so as to show plainly if the plane blade happens to shave them, and hence to prevent planing B B with the teeth. The blank teeth may now be separately placed in the box (Fig. 146) and secured by a screw, as shown in that figure, in which S is the screw, and T the blank tooth. The sides of the tooth must be carefully planed down equal and level with the surface of the box. The rim of the wheel, having been divided off into as many divisions as there are to be teeth in the wheel, as shown in Fig.

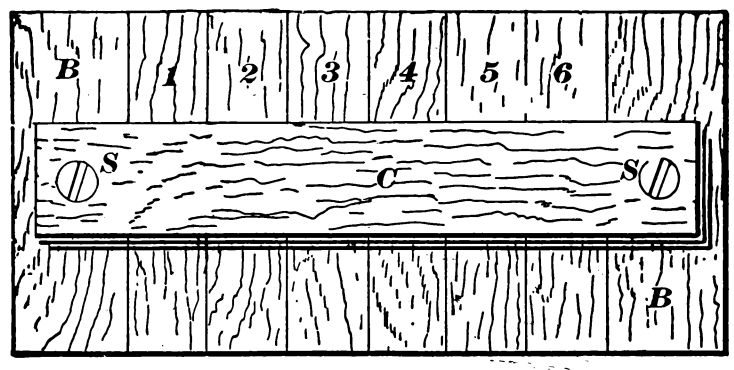

Fig. 148.

150, at *a*,*a*,*a*, &c., the finished teeth are glued so that the same respective side of each tooth exactly meets one of the lines *a*. Only a few spots of glue should be applied, and these at the middle of the root thickness, so that the glue shall not exude and hide the line *a*, which would make it difficult to set the teeth true to the line. When the teeth are all dry they must be additionally secured to the rim by nails. Wheels sufficiently large to incur difficulty of transportation are composed of a number of sections, each usually consisting of an arm, with an equal length of the rim arc on each side of it, so that the joint where the rim segments are bolted together will be midway between the two arms.

This, however, is not absolutely necessary so long as the joints are so arranged as to occur in the middle of tooth spaces, and not in the thickness of the tooth. This sometimes necessitates that the rim sections have an unequal length of arc, in which event the pattern is made for the longest segment, and when these are cast the teeth superfluous for the shorter segments are stopped off by the foundry moulder. This saves cutting or altering the pattern, which, therefore, remains good for other wheels when required.

When the teeth of wheels are to be cut in a gear-cutting machine the accurate spacing of the teeth is determined by the index plate and gearing of the machine itself; but when the teeth are to be cast upon the wheel and a pattern is to be made,

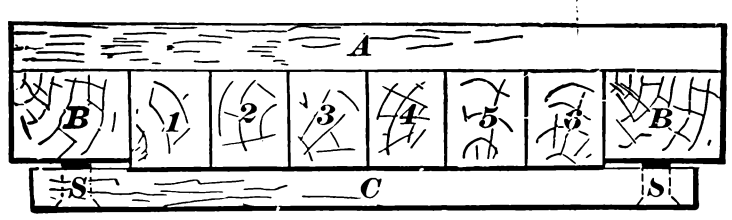

Fig. 149.

wherefrom to cast the wheel the points of division denoting the thickness of the teeth and the width of the spaces are usually marked by hand. This is often rendered necessary from the wheels being of too large a diameter to go into dividing machines of the sizes usually constructed.

To accurately divide off the pitch circle of a gear-wheel by hand, requires both patience and skilful manipulation, but it is time and trouble that well repays its cost, for in the accuracy of spaces lies the first requisite of a good gear-wheel.

It is a very difficult matter to set the compasses so that by commencing at any one point and stepping the compasses around the circle continuously in one direction, the compass point shall fall into the precise point from which it started, for if the compass point be set the 1-200th inch out, the last space will come an inch out in a circle having 200 points of divisions. It is, therefore, almost impossible and quite impracticable to accurately mark or divide off a circle having many points of division in this manner, not only on account of the fineness of the

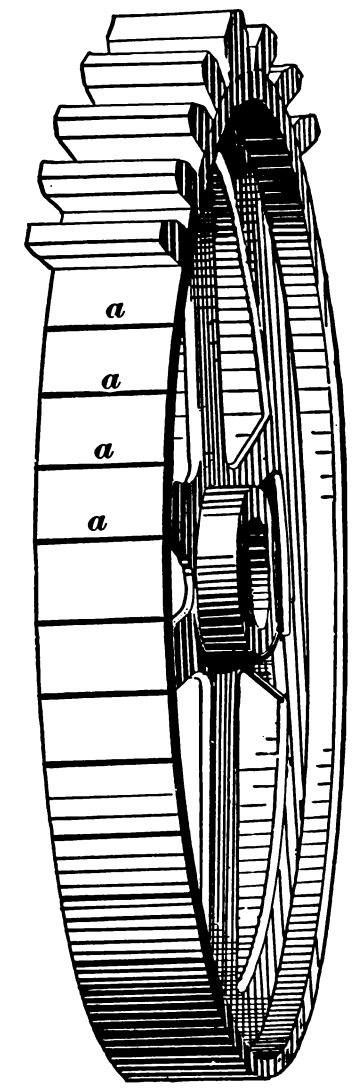

Fig. 150.

adjustment of the compass points, but because the frequent trials will leave so many marks upon the circle that the true ones will not be distinguishable from the false. Furthermore, the compass points are apt to spring and fall into the false marks when those marks come close to the true ones.

In Fig. 151 is shown a construction by means of which the compass points may be set more nearly than by dividing the circumference of the circle by the number of divisions it is required to be marked into and setting the compasses to the quotient, because such a calculation gives the length of the division measured around the arc of the circle, instead of the distance measured straight from point of division to point of division.

The construction of Fig. 151 is as follows: P P is a portion of the circle to be divided, and A B is a line at a tangent to the

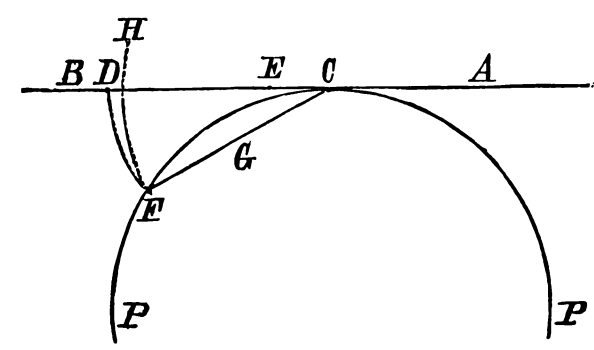

Fig. 151.

point C of the circle P P. The point D is set off distant from C, to an amount obtained by dividing the circumference of P P by the number of divisions it is to have. Take one-quarter of this distance C D, and mark it from C, giving the point E, set one point of the compass at E and the other at D, and draw the arc

D F, and the distance from F to C, as denoted by G, is the distance to which to set the compasses to divide the circle properly. The compasses being set to this distance G, we may rest one compass point at C, and mark the arc F H, and the distance between arc H and arc D, measured on the line A B, is the difference between the points C, F when measured around the circle P P, and straight across, as at G.

A pair of compasses set even by this construction will not, however, be entirely accurate, because there will be some degree of error, even though it be in placing the compass points on the

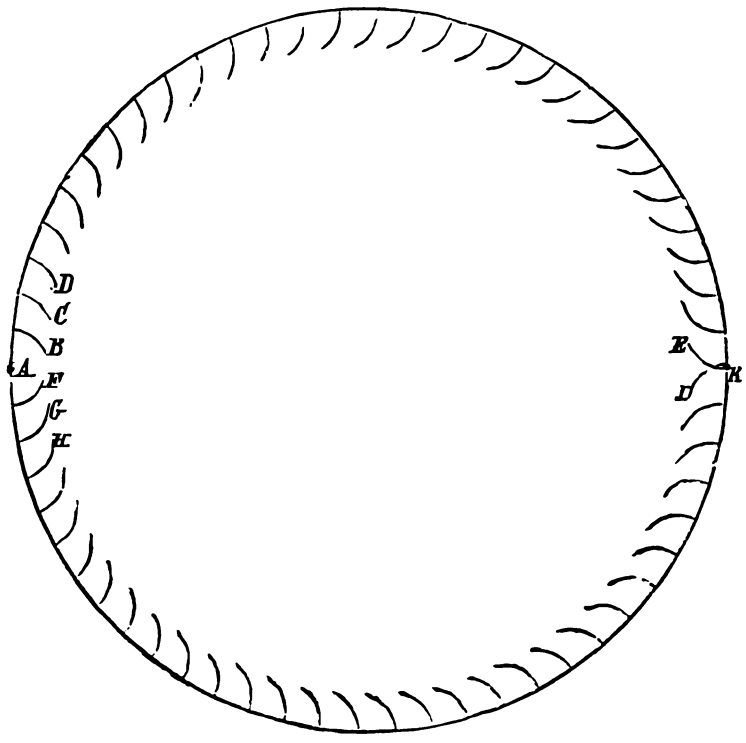

Fig. 152.

lines and on the points marked, hence it is necessary to step the compasses around the circle, and the best method off doing this is as follows: Commencing at A, Fig. 152, we mark off continuously one from the other, and taking care to be very exact to place the compass point exactly coincident with the line of the circle, the points B, C, D, &c., continuing until we have marked half as many divisions as the circle is to contain, and arriving at E, starting again at A, we mark off similar divisions (one half of the total number), F, G, H, arriving at I, and the centre K, between the two lines E, I, will be the true position of the point diametrally

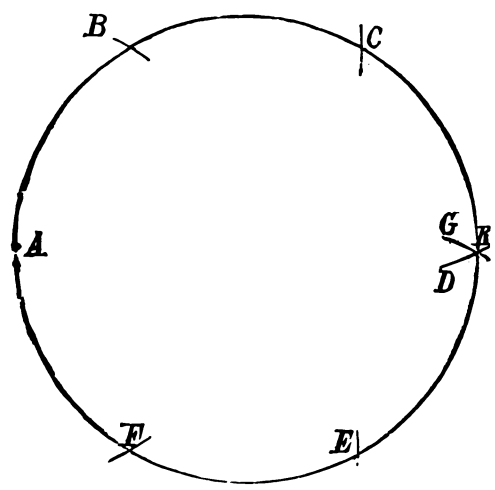

Fig. 153.

opposite to point A, whence we started. These points are all marked inside the circle to keep them distinct from those subsequently marked.

It will be, perhaps, observed by the reader that it would be more expeditious, and perhaps cause less variation, were we to set the compasses to the radius of the circle and mark off the point K, as shown in Fig. 153, commencing at the point A, and marking off on the one side the lines B, C, and D, and on the other side E, F, and G, the junction or centre, between G and D, at the circle being the true position of the point K. For circles struck upon flat surfaces, this plan may be advantageous; and in cases where there are not at hand compasses large enough, a pair of trammels may be used for the purpose; but our instructions are intended to apply also to marking off equidistant points on such circumferences as the faces of pulleys or on the outsides of small rings or cylinders, in which cases the use of compasses is impracticable. The experienced hand may, it is true, adjust the compasses as instructed, and mark off three or four of the marks B, C, &c.,

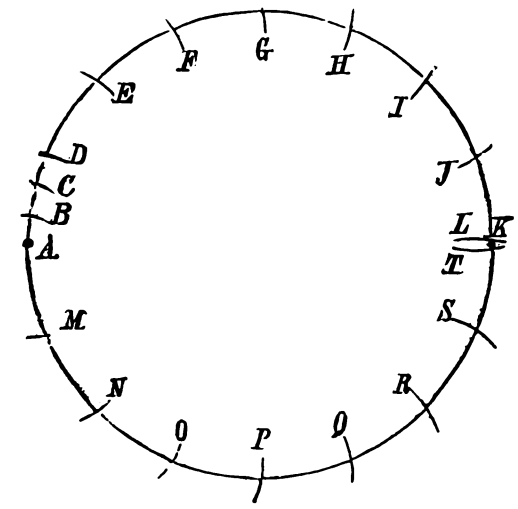

Fig. 154.

in Fig. 152, and then open out the compasses to the distance between the two extreme marks, and proceed as before to find the centre K, but as a rule, the time saved will scarcely repay the trouble; and all that can be done to save time in such cases is, if the holes come reasonably close together, to mark off, after the compasses are adjusted, three or four spaces, as shown in Fig. 154. Commencing at the point A, and marking off the points B, C, and D, we then set another pair of compasses to the distance between A and D, and then mark, from D on one side and from A on the other, the marks from F to L and from M to T, thus obtaining the point K. This method, however expeditious and correct for certain work, is not applicable to circumferential work of small diameter and in which the distance between two of the adjacent points is, at the most, $\frac{1}{20}$ of the circumference of the circle; because the angle of the surface of the metal to the compass point causes the latter to spring wider open in consequence of the pressure necessary to cause the compass point to mark the metal. This will be readily perceived on reference to Fig. 155 in which A represents the stationary, and B the scribing or marking point of the compasses.

The error in the set of the compasses as shown by the distance apart of the two marks E and I on the circle in Fig. 152 is too

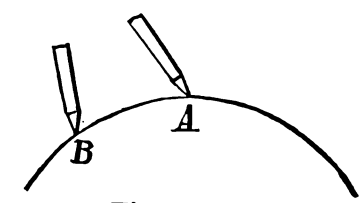

Fig. 155.

fine to render it practicable to remedy it by moving the compass legs, hence we effect the adjustment by oilstoning the points on the outside, throwing them closer together as the figure shows is necessary.

Having found the point K, we mark (on the outside of the circle, so as to keep the marks distinct from those first marked) the division B, C, D, Fig. 156, &c., up to G, the number of divisions between B and G being one quarter of those in the whole circle. Then, beginning at K, we mark off also one quarter of the number of divisions arriving at M in the figure and producing the point 3. By a similar operation on the other side of the circle, we get the true position of point No. 4. If, in obtaining points 3 and 4, the compasses are not found to be set dead true, the necessary adjustment must be made; and it will be seen that, so far, we have obtained four true positions, and the process of obtaining each of them has served as a justification of the distance of the compass points. From these four points we may proceed in like

manner to mark off the holes or points between them; and the whole will be as true as it is practicable to mark them off upon that size of circle. In cases, however, where mathematical precision is required upon flat and not circumferential surfaces, the marking off may be performed upon a circle of larger diameter, as shown in Fig. 157. If it is required to mark off the circle A, Fig. 157, into any even number of equidistant points, and if, in consequence of the closeness together of the points, it becomes difficult to mark them (as described) with the compasses, we

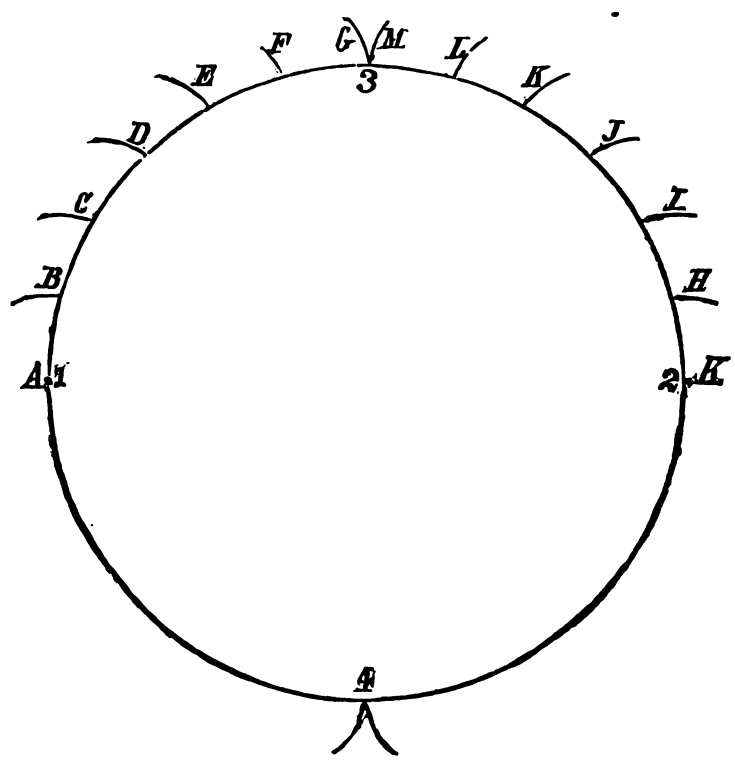

Fig. 156.

mark a circle B B of larger diameter, and perform our marking upon it, carrying the marks across the smaller circle with a straightedge placed to intersect the centres of the circles and the points marked on each side of the diameter. Thus, in Fig. 157, the lines 1 and 2 on the smaller circle would be obtained from a line struck through 1 and 4 on the outer circle; and supposing the larger circle to be three times the size of the smaller, the

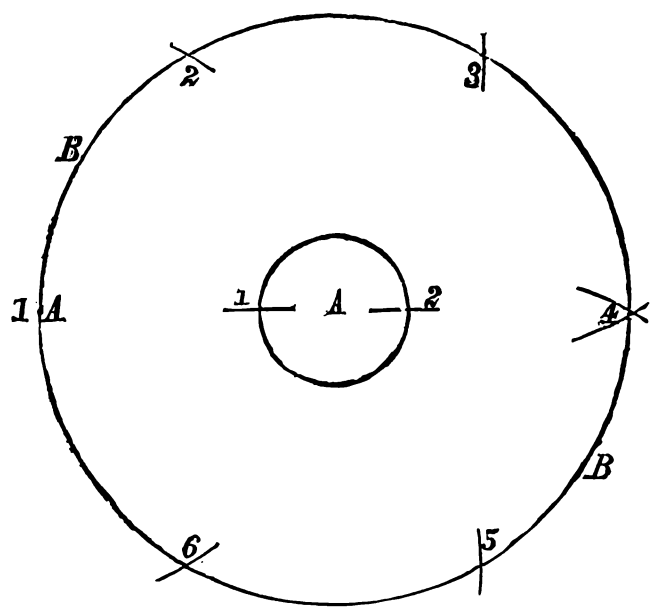

Fig. 157.

deviation from truth in the latter will be only $\frac{1}{3}$ of whatever it is in the former.

In this example we have supposed the number of divisions to be an even one, hence the point K, Fig. 152, falls diametrically opposite to A, whereas in an odd number of points of division this would not be the case, and we must proceed by either of the two following methods:—

In Fig. 158 is shown a circle requiring to be divided by 17 equidistant points. Starting from point 1 we mark on the outside of the circumference points 2, 3, 4, &c., up to point 9. Starting again from point 1 we mark points 10, 11, &c., up to 17. If, then, we try the compasses to 17 and 9 we shall find they come too close together, hence we take another pair of compasses (so as not to disturb the set of our first pair) and find the centre between 9 and 17 as shown by the point A. We then correct the set of our first pair of compasses, as near as the judgment dictates, and from point A, we mark with the second compasses (set to one half the new space of the first compasses) the points B, C. With the first pair of compasses, starting from B, we mark D, E, &c., to G; and from I, we mark divisions H, I, &c., to K, and if the compasses were set true, K and G would meet at the circle. We may, however, mark a point midway between K and G, as at 5. Starting again from points C and I, we mark the other side of the circle in a similar manner, producing the lines P and Q, midway between which (the compasses not being set quite correct as yet) is the true point for another division. After again correcting the compasses, we start from B and 5 respectively, and mark point 7, again correcting the compasses. Then from C and the point between P and Q, we may mark an intermediate point, and so on until all the points of division are made. This method is correct enough for most practical purposes, but the method shown in Fig. 159 is more correct for an odd number of points of division. Suppose that we have commenced at the point marked 1, we mark off half the required number of holes on one side and arrive at the point 2; and then, commencing at the point 1 again, we mark off the

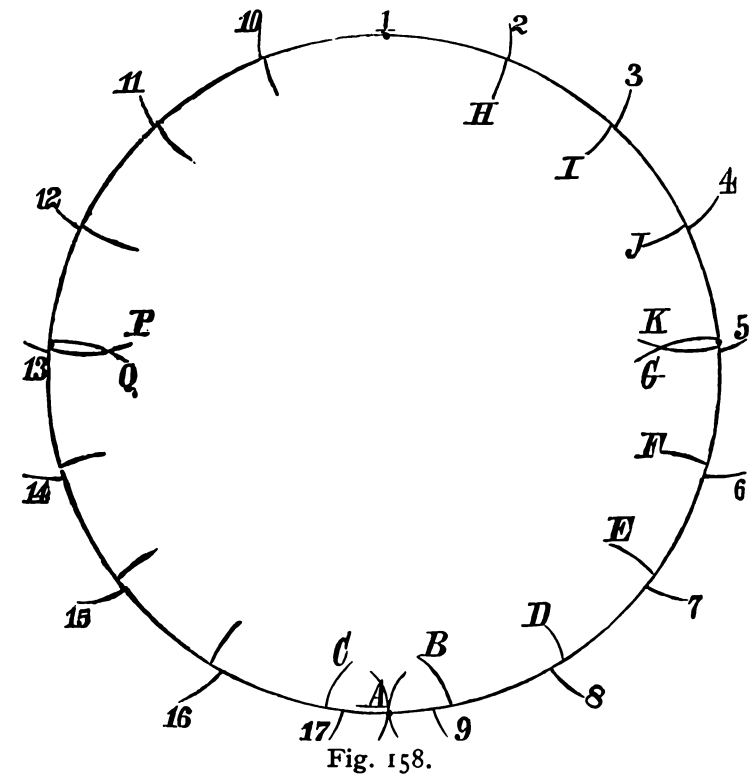

Fig. 158.

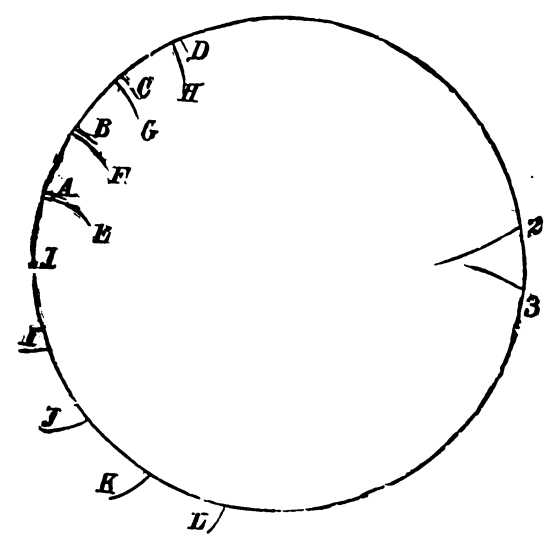

Fig. 159.

other half of the required number of holes, arriving at the point 3. We then apply our compasses to the distance between the points 2 and 3; and if that distance is not exactly the same to which the compasses are set, we make the necessary adjustment, and try again and again until correct adjustment is secured.

It is highly necessary, in this case, to make the lines drawn at

each trial all on the same side of the circle and of equal length, but of a different length to those marked on previous trials. For example, left the lines A, B, C, D, in Fig. 159 represent those made on the first trial, and E, F, G, H, those made on the second trial; and when the adjustment is complete, let the last trial be made upon the outside or other side of the circle, as shown by the lines I, J, K, L. Having obtained the three true points, marked 1, 2, 3, we proceed to mark the intermediate divisions, as described for an even number of divisions, save that there will be a space, 2 and 3, opposite point 1, instead of a point, as in case of a circle having an even number of divisions.

The equal points of division thus obtained may be taken for the centres of the tooth at the pitch circle or for one side of the teeth, as the method to be pursued to mark the tooth curves may render most desirable. If, for example, a template be used to mark off the tooth curves, the marks may be used to best advan-

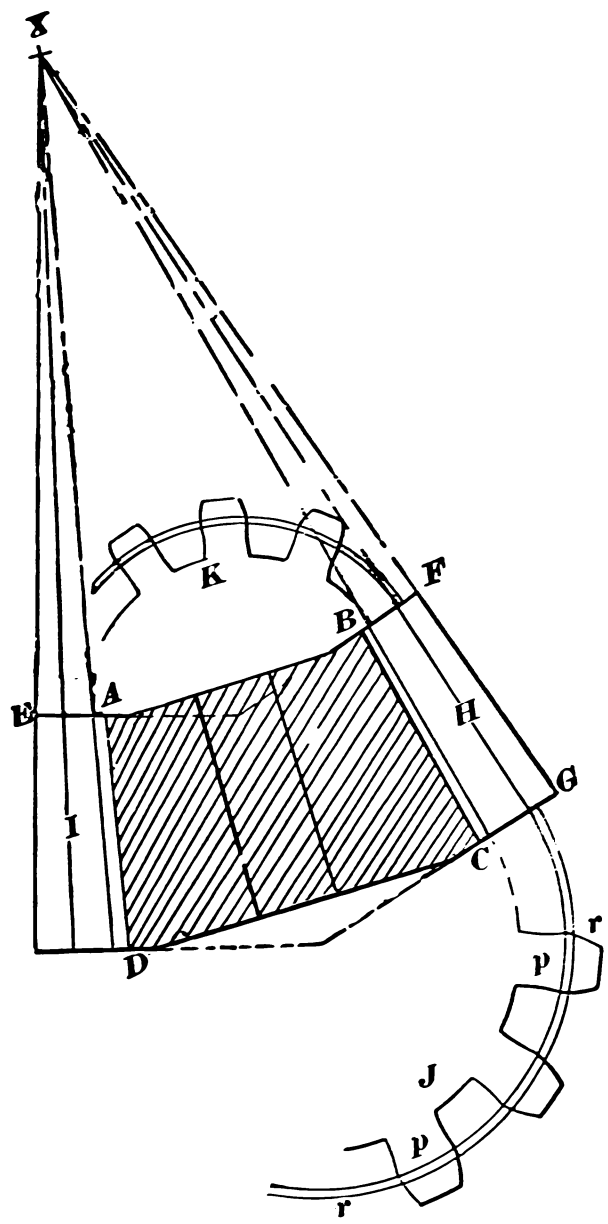

Fig. 160.

tage as representing the side of a tooth, and from them the thickness of the tooth may be marked or not as the kind of template used may require. Thus, if the template shown in Fig. 21 be used, no other marks will be used, because the sides of a tooth on each side of a space may be marked at one setting of the template to the lines or marks of division If, however, a template, such as shown in Fig. 81 be used, a second set of lines marked distant from the first to a radius equal to the thickness of a tooth becomes necessary so that the template may be set to each line marked. If the Willis odontograph or the Robinson template odontograph be used the second set of lines will also be necessary. In using the Walker scale a radial line, as G in Fig. 142, will require to be marked through the points of equal division, and the thickness of the tooth at the points on the pitch circle and at the root must be marked as was shown in Fig. 142.

But if the arcs for the tooth curves are to be marked by compasses, the location for the centres wherefrom to strike these arcs may be marked from the points of division as was shown in Fig. 130.

To construct a pattern wherefrom to cast a bevel gear-wheel.—When a pair of bevel-wheels are in gear and upon their respective shafts all the teeth on each wheel incline, as has been shown, to a single point, hence the pattern maker draws upon a piece of board a sketch representing the conditions under which the wheels are to operate. A sketch of this kind is shown in Fig. 160, in which A, B, C, D, represent in section the body of a bevel pinion. F G is the point of a tooth on one side, and E the point of a tooth on the other side of the pinion, while H I are pitch lines for the two teeth. Thus, the cone surface, the points, the pitch lines and the bottom of the spaces, projected as denoted by

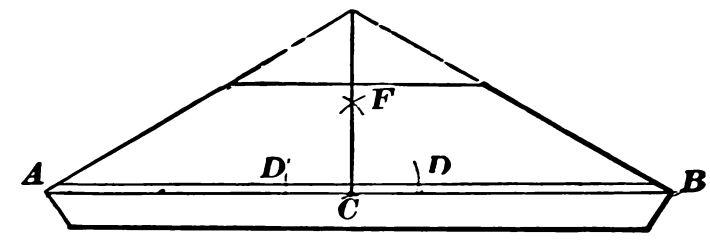

Fig. 161.

the dotted lines, would all meet at X, which represents the point where the axes of the shafts would meet.

In making wooden patterns wherefrom to cast the wheels, it is usual, therefore, to mark these lines on a drawing-board, so that they may be referred to by the workman in obtaining the degree of cone necessary for the body A B C D, to which the teeth are to be affixed. Suppose, then, that the diameter of the pinion is sufficiently small to permit the body A B C D to be formed of one piece instead of being put together in segments, the operation is as follows: The face D C is turned off on the lathe, and the piece is reversed on the lathe chuck, and the face A B is turned, leaving a slight recess at the centre to receive and hold the cone point true with the wheel. A bevel gauge is then set to the angle A B C, and the cone of the body is turned to coincide in angle with the gauge and to the required diameter, its surface being made true and straight so that the teeth may bed well. While turning the face D C in the lathe a fine line circle should be struck around the circumference of the cone and near D C, on which line the spacing for the teeth may be stepped off with the compasses. After this circle or line is divided off into as many equidistant points as there are to be teeth on the wheel, the points of division require to be drawn into lines, running across the cone surface of the wheel, and as the ordinary square is inapplicable for the purpose, a suitable square is improvised as follows: In Fig. 161 let the outline in full lines denote the body of a pinion ready to receive the teeth, and A B the circle referred to as necessary for the spacing or dividing with the compasses. On A B take any point, as C, as a centre, and with a pair of compasses mark equidistant on each side of it two lines, as D, D. From D, D as respective centres mark two lines, crossing each other as at F,

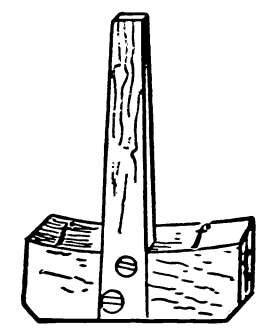

Fig. 162.

and draw a line, joining the intersection of the lines at F with C, and the last line, so produced, will be in the place in which the teeth are to lie; hence the wheel will require as many of these lines as it is to contain teeth, and the sides of the teeth, being set to these lines all around the pinion, will be in their proper positions, with the pitch lines pointing to X, in Fig. 160.

To avoid, however, the labor involved in producing these lines for each tooth, two other plans may be adopted. The first is to make a square, such as shown in Fig. 162, the face *f f* being fitted to the surface C, in Fig. 161, while the edges of its blade

coincide with the line referred to; hence the edge of the blade may be placed coincident successively with each point of division, as D D, and the lines for the place of the length of each tooth be drawn. The second plan is to divide off the line A B before removing the body of the pinion from the lathe, and produce, as described, a line for one tooth. A piece of wood may then be placed so that when it lies on the surface of the hand-rest its upper surface will coincide with the line as shown in Fig. 163, in which W is the piece of wood, and A, B, C, &c., the lines referred to. If the teeth are to be glued and bradded to the body, they

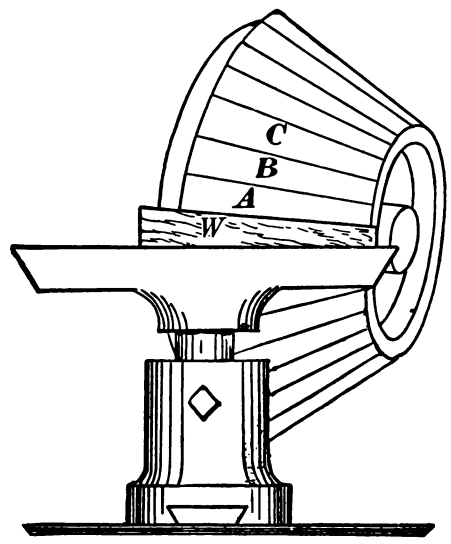

Fig. 163.

are first cut out in blocks, left a little larger every way than they are to be when finished, and the surfaces which are to bed on the cone are hollowed to fit it. Then blocks are glued to the body, one and the same relative side of each tooth being set fair to the lines. When the glue is dry, the pinion is again turned on the lathe, the gauge for the cone of the teeth being set in this case to the lines E, F G in Fig. 160. The pitch circles must then be struck at the ends of the teeth. The turned wheel is then ready to have the curves of the teeth marked. The wheel must now again be divided off on the pitch circle at the large end of the cone into as many equidistant points as there are to be teeth on

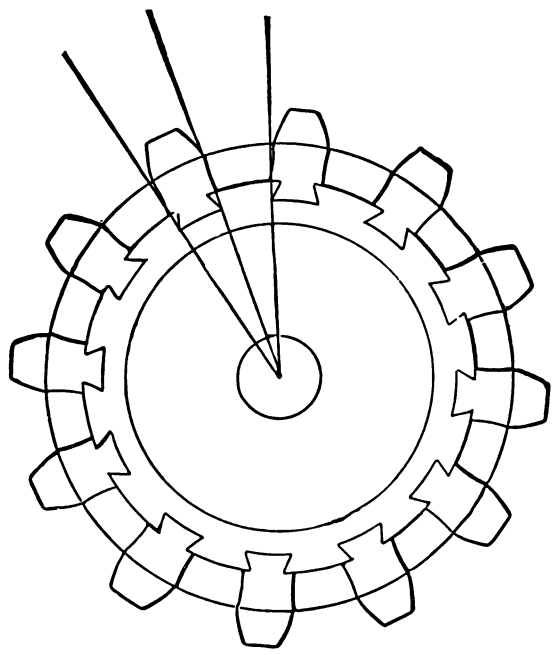

Fig. 164.

the wheel, and from these points, and on the same relative side of them, mark off a second series of points, distant from the points of division to an amount equal to the thickness the teeth are required to be. From these points draw in the outline of the teeth (upon the ends of the blocks to form the teeth) at the large end of the cone. Then, by use of the square, shown in Fig. 162, transfer the points of the teeth to the small end of the cone, and trace the outline of the teeth at the small end, taking centres and distances proportionate to the reduced diameter of the pitch circle at the small end, as shown in Fig. 160, where at J are three teeth so marked for the large end, and at K three for the small end, P P representing the pitch circle, and R R a circle for the compass points. The teeth for bevel pinions are sometimes put on by dovetails, as shown in Fig. 164, a plan which possesses points of advantage and disadvantage. Wood shrinks more across the grain than lengthwise with it, hence when the grain of the teeth crosses that of the body with every expansion or contraction of the wood (which always accompanies changes in the humidity of the atmosphere) there will be a movement between the two, because of the unequal expansion and contraction, causing the teeth to loosen or to move. In the employment of dovetails, however, a freedom of movement lengthways of the tooth is provided to accommodate the movement, while the teeth are detained in their proper positions. Again, if in making the founders' mould, one of the mould teeth should break or fall down when the pattern is withdrawn, a tooth may be removed from the pattern and used by the moulder to build up the damaged part of the mould again. And if the teeth of a bevel pinion are too much undercut on the flank curves to permit the whole pattern from being extracted from the mould without damaging it, dovetailed teeth may be drawn, leaving the body of the pattern to be extracted from the mould last. On the other hand, the dovetail is a costly construction if applied to large wheels. If the teeth are to be affixed by dovetails, the construction varies as follows: Cut out a wooden template of the dovetail, leaving it a little narrower than the thick-

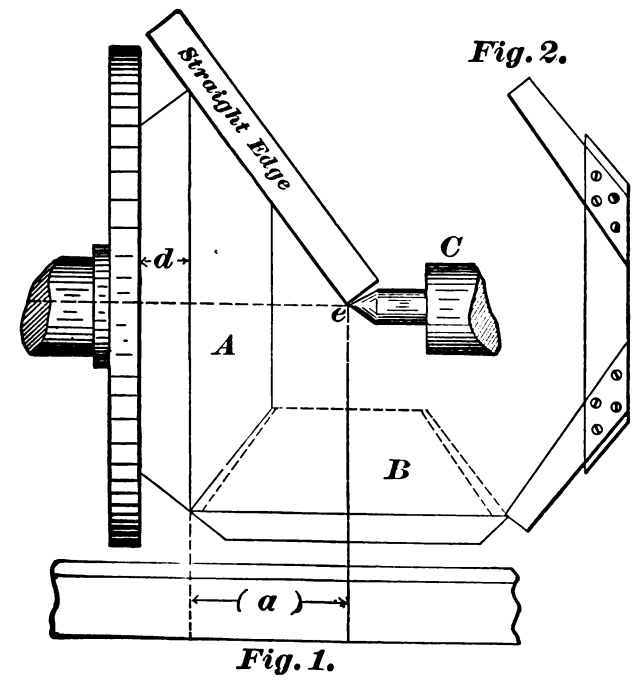

Fig. 2.

Fig. 1.

Fig. 165.

ness of the tooth at the root, and set the template on the cone at a distance from one of the lines A, B, C, Fig. 163, equal to the margin allowed between the edge of the dovetail and the side of the root of the tooth, and set it true by the employment of the square, shown in Fig. 162, and draw along the cone surface of the body lines representing the location of the dovetail grooves. The lines so drawn will give a taper toward X (Fig. 160), providing that, the template sides being parallel, each side is set to the square. While the body is in the lathe, a circle on each end may be struck for the depth of the dovetails, which should be cut out to gauge and to template, so that the teeth will interchange to any dovetail. The bottom of the dovetails need not be circular, but flat, which is easier to make. Dovetail pieces or strips are fitted to the grooves, being left to project slightly above the face of the cone or body. They are drawn in tight enough to enable them to keep their position while being turned in the lathe when the projecting points are turned down level with the cone of the body. The teeth may then be got out as described for glued teeth, and the dovetails added, each being marked to its place, and finally the teeth are cut to shape.

In wheels too large to have their cones tested by a bevel gauge, a wooden gauge may be made by nailing two pieces of wood to stand at the required angle as shown in Fig. 165, which is extracted from *The American Machinist*, or the dead centre C and a straightedge may be used as follows. In the figure the other wheel of the pair is shown dotted in at B, and the dead centre is

set at the point where the axes of A and B would meet; hence if the largest diameter of the cone of A is turned to correct size, the cone will be correct when a straightedge applied as shown lies flat on the cone and meets the point of the dead centre E. The pinion B, however, is merely introduced to explain the principle, and obviously could not be so applied practically, the distance to set *e*, however, is the radius *a*.

Skew Bevel.*—When the axles of the shaft are inclined to each other instead of being in a straight line, and it is proposed to connect and communicate motion to the shafts by means of a

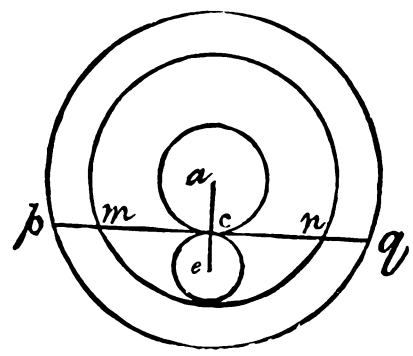

Fig. 166.

single pair of bevel-gears, the teeth must be inclined to the base of the frustra to allow them to come into contact.

To find the line of contact upon a given frustrum of the tangent-cone; let the Fig. 166 be the plane of the frustrum; *a* the centre. Set off *a e* equal to the shortest distance between the axes (called the *eccentricity*), and divide it in *c*, so that *a c* is to *e c* as the mean radius of the frustrum to the mean radius of that with which it is to work; draw *c p* perpendicular to *a e*, and meeting the circumference of the conical surface at *m*; perform a similar

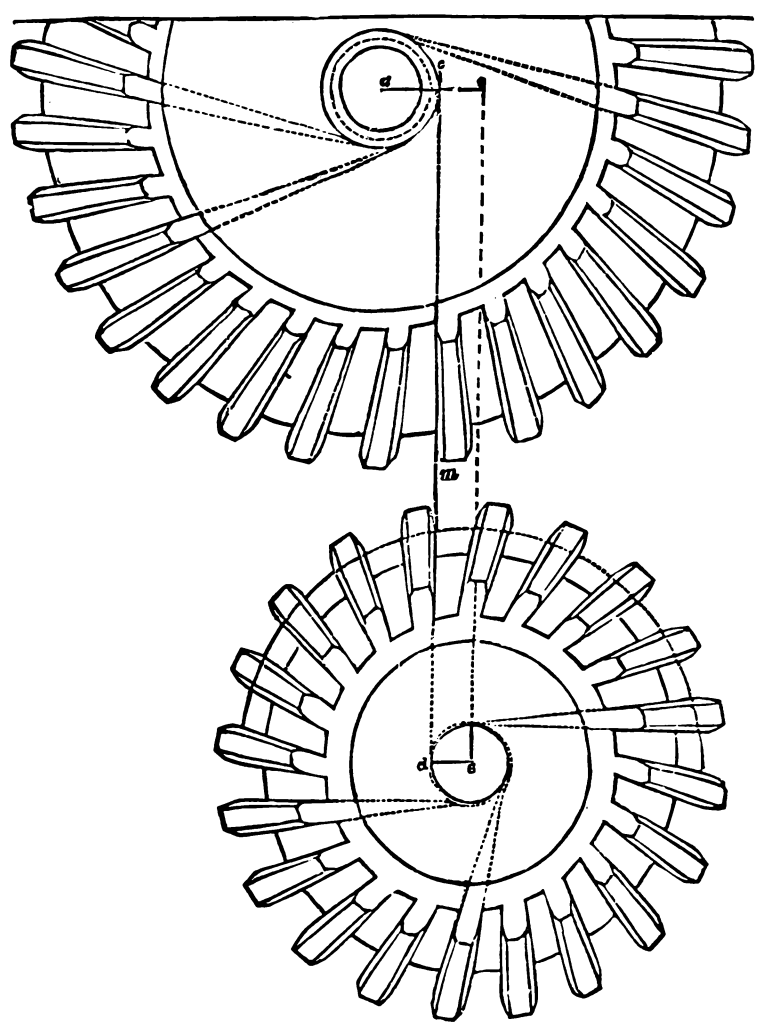

Fig. 167.

operation on the base of the frustrum by drawing a line parallel to *c m* and at the same distance *a c* from the centre, meeting the circumference in *p*.

The line *p c* is then plainly the line of direction of the teeth. We are also at liberty to employ the equally inclined line *c q* in the opposite direction, observing only that, in laying out the two wheels, the pair of directions be taken, of which the inclinations correspond.

Fig. 167 renders this mode of laying off the outlines of the wheels at once obvious. In this figure the line *a e* corresponds to the line marked by the same letters in Fig. 166; and the division of it at *c* is determined in the manner directed. The line *c m* being thus found in direction, it is drawn indefinitely to *d*. Parallel to this line and from the point *c* draw *e* to *e*, and in this line take the centre of the second wheel. The line *c m d* gives the direction of the teeth; and if from the centre *a* with radius at *c* a circle be described, the direction of any tooth of the wheel will be a tangent to it, as at *c*, and similarly if a centre *e* be taken in the line *e d*, and with radius *e d*, *c e* a circle be drawn, the direction of the teeth of the second wheel will be tangents to this last, as at *d*.

Having thus found the direction of the teeth, these outlines may be formed as in the case of ordinary bevel-wheels and with equal exactness and facility, all that is necessary being to find the curves for the teeth as described for bevel-wheels, and follow precisely the same construction, except that the square, Fig. 162, marking the lines across the cones, requires to be set to the angle for the tooth instead of at a right angle, and this angle may be found by the construction shown in Fig. 167, it being there represented by line *d c*. It is obvious, however, that the

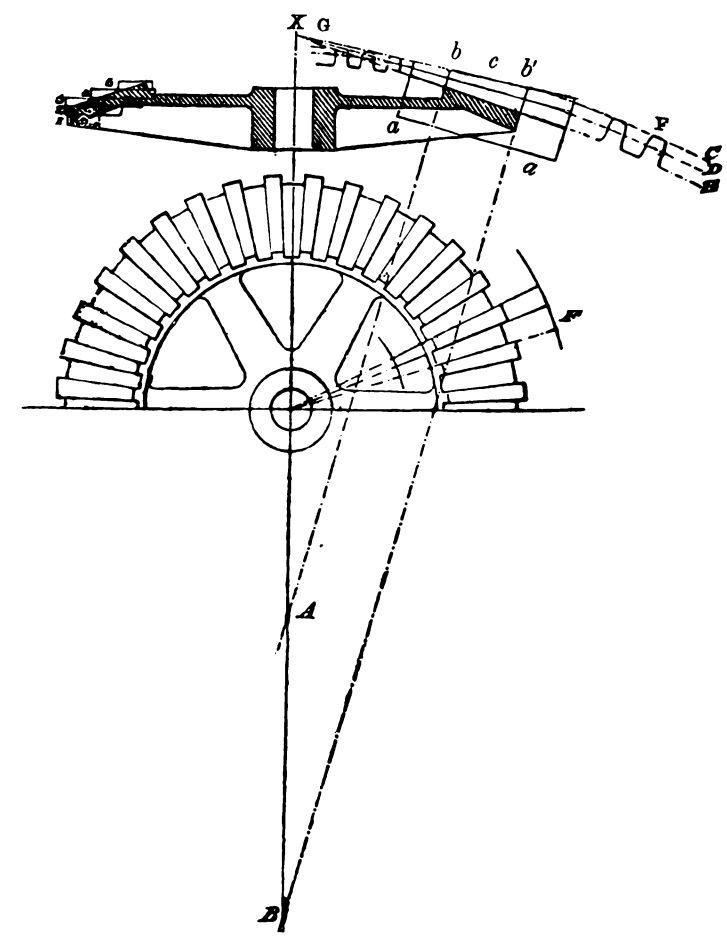

Fig. 168.

bottoms of the blocks to form the teeth must be curved to bed on the cone along the line *d c*, Fig. 167, and this may best be done by bedding two teeth, testing them by trial of the actual surfaces.

Then two teeth may be set in as No. 1 and No. 6 in the box shown in Fig. 148, the intermediate ones being dressed down to them.

Where a bevel-wheel pattern is too large to be constructed in one piece and requires to be built up in pieces, the construction is as in Fig. 168, in which on the left is shown the courses of segments 1, 2, 3, 4, 5, &c., of which the rim is built up (as described for spur wheels), and on the right is shown the finished rim with a tooth, *c*, in position.

The tooth proper is of the length of face of the wheel as denoted by *b b'*; now all the lines bounding the teeth must converge to the point X. Suppose, then, that the teeth are to be shaped for curve of face and flank in a box as described for spur-wheel teeth in Fig. 146, then in Fig. 168 let *a*, *a* represent the

* From the "Engineer and Machinists' Assistant."

bottom and *b b'* the top of the box, and *c* a tooth in the box, its ends filling the opening in the box at *b b'* then the curve on the sides of the box at *b'* must be of the form shown at F, and the curve on the sides of the box (at the point *b* of its length) must be as shown at G, the teeth shown in profile at G and F representing the forms of the teeth at their ends, on the outside of the wheel rim at *b'*, and on the inside at *b* ; having thus made a box of the correct form on its sides, the teeth may be placed in it and planed down to it, thus giving all the teeth the same curve.

The spacing for the teeth and their fixing may be done as described for the bevel pinion.

To construct a pattern wherefrom to cast an endless screw, worm, or tangent screw, which is to have the worm or thread cut in a lathe.—Take two pieces, each to form one longitudinal half of the pattern ; peg and screw them together at the ends, an

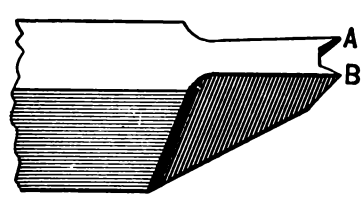

Fig. 169.

excess of stuff being allowed at each end for the accommodation of two screws to hold the two halves together while turning them in the lathe, or dogs, if the latter are more convenient, as they might be in a large pattern. Turn the piece down to the size over the top of the thread, after which the core prints are turned. The body thus formed will be ready to have the worm or thread cut, and for this purpose the tools shown in Figs. 169 and 140 are necessary.

That shown in Fig. 169 should be flat on the face similar to a parting tool for cast iron, but should have a great deal more bottom rake, as strength is not so much an object, and the tool is more easily sharpened. It has also in addition two little projections A B like the point of a penknife, formed by filing away the steel in the centre ; these points are to cut the fibres of the wood, the severed portion being scraped away by the flat part of the tool.

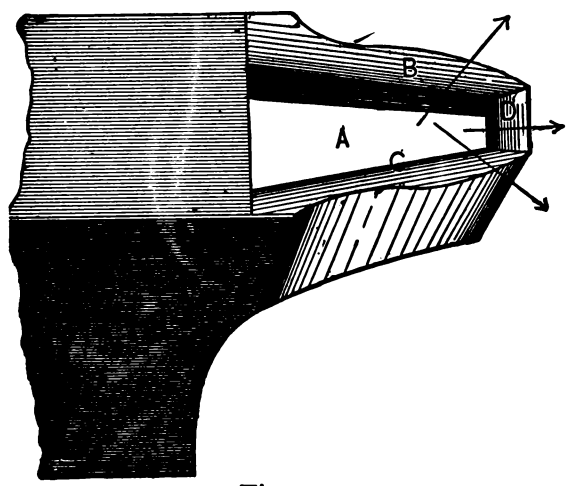

Fig. 170.

The degree of side rake given to the tool must be sufficient to let the tool sides well clear the thread or worm, and will therefore vary with the pitch of the worm.

The width of the tool must be a shade narrower than the narrowest part of the space in the worm. Having suitably adjusted the change wheels of the lathe to cut the pitch required the parting tool is fed in until the extreme points reach the bottom of the spaces, and a square nosed parting tool without any points or spurs will finish the worm to the required depth. This will have left a square thread, and this we have now to cut to the required curves on the thread or worm sides, and as the cutting will be performed on the end grain of the wood, the top face of the tool must be made keen by piercing through the tool a slot A, Fig. 170, and filing up the bevel faces B, C and D, and then carefully oilstoning them. This tool should be made slightly narrower than the width of the worm space, so that it may not cut on both sides at once, as it would have too great a length of cutting edge.

Furthermore, if the pattern is very large, it will be necessary to have two tools for finishing, one to cut from the pitch line inwards and the other to complete the form from the pitch line outwards. It is advisable to use hard wood for the pattern.

If it is decided to cut the thread by hand instead of with these lathe tools, then, the pattern being turned as before, separate the two halves by taking out the screws at the ends ; select the half

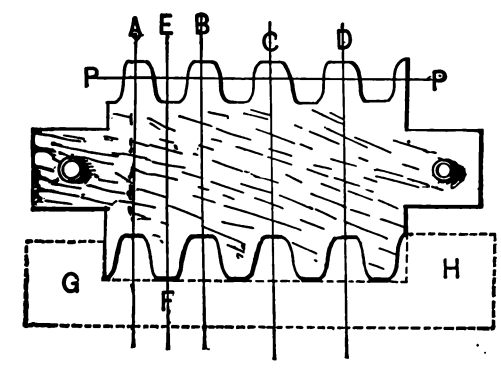

Fig. 171.

that has not the pegs, as being a little more convenient for tracing lines across. Set out the sections of the thread, A, B, C, and D, Fig. 171, similar to a rack ; through the centres of A, B, C, and D, square lines across the piece ; these lines, where they intersect the pitch line, will give the centres of teeth on that side : or if we draw lines, as E, F, through the centres of the spaces, they will pass through the centres of the teeth (so to speak) on the other side ; in this position complete the outline on that side. It will be found, in drawing these outlines, that the centres of some of the arcs will lie outside the pattern. To obtain support for the compasses, we must fit over the pattern a piece of board such as shown by dotted lines at G H.

It now remains to draw in the top of the thread upon the curved surface of the half pattern ; for this purpose take a piece of stiff card or other flexible material, wrap it around the pattern and fix it temporarily by tacks, we then trim off the edges true to the pattern, and mark upon the edges of the card the position of the tops of the thread upon each side ; we remove the card and spread it out on a flat surface, join the points marked on the edges by lines as in Fig. 172, replace the card exactly as before upon the pattern, and with a fine scriber we prick through the lines. The cutting out is commenced by sawing, keeping, of course, well within the lines ; and it is facilitated by attaching a stop to the saw so as to insure cutting at all parts nearly to the exact depth. This stop is a simple strip of wood and may be clamped to the saw, though it is much more convenient to have a couple of holes in the saw blade for the passage of screws. For

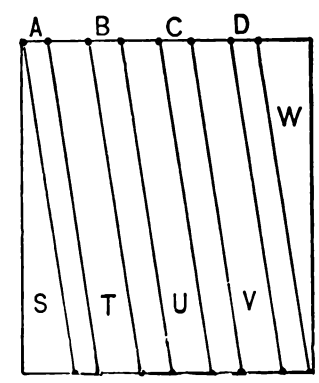

Fig. 172.

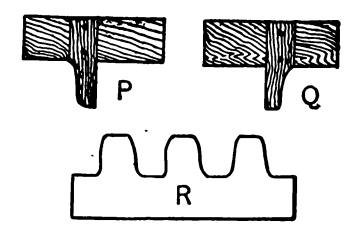

Fig. 173.

finishing, a pair of templates, P and Q, Fig. 173, right and left, will be found useful ; and finally the work should be verified and slight imperfections corrected by the use of a form or template taking in three spaces, as shown at R in Fig. 173. In drawing the lines on the card, we must consider whether it is a right or left-handed worm that we desire. In the engraving the lines are those suitable for a right-handed thread. Having completed one half of the pattern, place the two halves together, and trace off the half that is uncut, using again the card template for drawing the lines on the curved surface. The cutting out will be the same as before.

As the teeth of cast wheels are, from their deviation from accuracy in the tooth curves and the concentricity of the teeth to the wheel centre, apt to create noise in running, it is not unusual to cast one or both wheels with mortises in the rim to receive wooden teeth. In this case the wheel is termed a mortise wheel, and the teeth are termed *cogs*. If only one of a pair of wheels is to be cogged, the largest of the pair is usually selected, because there are in that case more teeth to withstand the wear, it being obvious that the wear is greatest upon the wheel having the fewest teeth, and that the iron wheel or pinion can better withstand the wear than the mortise wheel. The woods most used for cogs are hickory, maple, hornbeam and locust. The blocks wherefrom the teeth are to be formed are usually cut out to nearly the required dimensions, and kept in stock, so as to be thoroughly well-seasoned when required for use, and, therefore

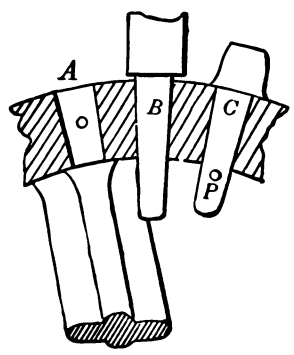

Fig. 174.

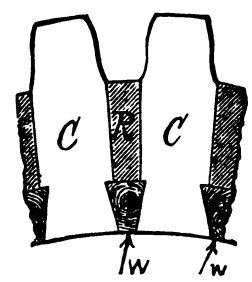

Fig. 175.

less liable to come loose from shrinkage after being fitted to the mortise in the wheel. The length of the shanks is made sufficient to project through the wheel rim and receive a pin, as shown in Fig. 174, in which B is a blank tooth, and C a finished tooth inserted in the wheel, the pin referred to being at P. But, if a mortise should fall in an arm of the wheel, this pin-hole must pass through the rim, as shown in the mortise A. The wheel, however, should be designed so that the mortises will not terminate in the arms of the wheel.

Another method of securing the teeth in the mortises is to dovetail them at the small end and drive wedges between them, as shown in Fig. 175, in which C C are two contiguous teeth, R the wheel rim and W W two of the wedges. On account of the dovetailing the wedges exert a pressure pressing the teeth into the mortises. This plan is preferable to that shown in the Fig. 174 inasmuch as from the small bearing area of the pins they become

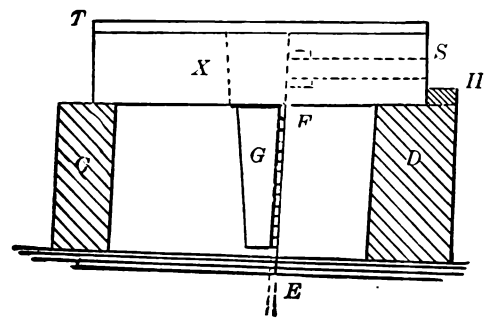

Fig. 176.

loose quicker, and furthermore there is more elasticity to take up the wear in the case of the wedges.

The mortises are first dressed out to a uniform size and taper, using two templates to test them with, one of which is for the breadth and the other for the width of the mortise. The height above the wheel requires to be considerably more than that due to the depth of the teeth, so that the surface bruised by driving the cogs or when fitting them into the mortises may be cut off. To avoid this damage as much as possible, a broad-face hammer should be employed—a copper, lead, lignum vitæ, or a raw hide hammer being preferable, and the last the best. The teeth are got out in a box and two guides, such as shown in Figs. 176, 177, and 178, similar letters of reference denoting the same parts in all three illustrations.

In Fig. 176, X is a frame or box containing and holding the operative part of the tooth, and resting on two guides C D. The height of D from the saw table is sufficiently greater than that of C to give the shank G the correct taper, E F representing the circular saw. T is a plain piece of the full size of the box or frame, and serving simply to close up on that side the mortise in the frame. The grain of T should run at a right angle to the other piece of the frame so as to strengthen it. S is a binding screw to hold the cog on the frame, and H is a guide for the edge of the frame to slide against. It is obvious, now, that if the piece D be adjusted at a proper distance from the circular saw E F, and the edge of the frame be moved in contact with the guide H.

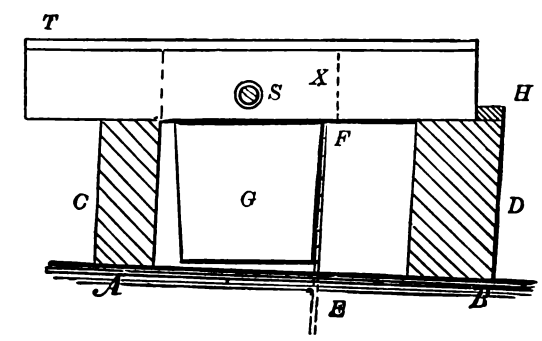

Fig. 177.

one side of the tooth shank will be sawn. Then, by reversing the frame end for end, the other side of the shank may be sawn. Turning the frame to a right angle the edges of the cog shank can be sawn from the same box or frame, and pieces C, D, as shown in Fig. 177.

The frame is now stood on edge, as in Fig. 178, and the underneath surfaces sawed off to the depth the saw entered when the shank taper was sawn. This operation requires to be performed on all four sides of the tooth.

After this operation is performed on one cog, it should be tried in the wheel mortises, to test its correctness before cutting out the shanks on all the teeth.

The shanks, being correctly sawn, may then be fitted to the mortises, and let in within $\frac{1}{8}$ of butting down on the face of the wheel, this amount being left for the final driving. The cogs should be numbered to their places, and two of the mortises must be numbered to show the direction in which the numbers proceed. To mark the shoulders (which are now square) to the curvature of the rim, a fork scriber should be used, and the shanks of the cogs should have marked on them a line coincident with the inner edge of the wheel rim. This line serves as a guide in marking the pin-holes and for cutting the shanks to length; but it is to be remembered that the shanks will pass farther through to the amount of the distance marked by the fork scriber. The holes for the pins which pass through the shanks should be made

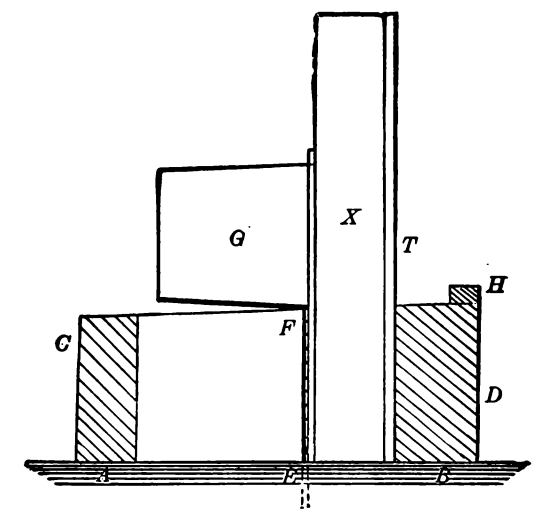

Fig. 178.

slightly less in their distances (measured from the nearest edge of the pin-hole) from the shoulders of the cogs than is the thickness of the rim of the wheel, so that when the cogs are driven fully home the pin-holes will appear not quite full circles on the inside of the wheel rim; hence, the pins will bind tightly against the inside of the wheel rim, and act somewhat as keys, locking and drawing the shanks to their seats in the mortises.

In cases where quietness of running is of more consequence than the durability of the teeth, or where the wear is not great, both wheels may be cogged, but as a rule the larger wheel is cogged, the smaller being of metal. This is done because the teeth of the smaller wheel are the most subject to wear. The teeth of the cogged wheel are usually made the thickest, so as to somewhat equalise the strength of the teeth on the two wheels.

Since the power transmitted by a wheel in a given time is composed of the pressure or weight upon the wheel, and the space a point on the pitch circle moves through in the given time, it is obvious that in a train of wheels single geared, the velocities of all the wheels in the train being equal at the pitch circle, the teeth require to be of equal pitch and thickness throughout the train. But when the gearing is compounded the variation of velocity at the pitch circle, which is due to the compounding, has an important bearing upon the necessary strength of the teeth.

Suppose, for example, that a wheel receives a tooth pressure of 100 lbs. at the pitch circle, which travels at the velocity of 100 feet per minute, and is keyed to the same shaft with another wheel whose velocity is 50 feet per minute. Now, in the power transmitted by the two wheels the element of time is 50 for one wheel and 100 for the other, hence the latter (supposing both wheels to have an equal number of teeth in contact with their driver or follower as the case may be) will be twice as strong in proportion to the duty, and it appears that in compounded gearing the strength in proportion to the duty may be varied in proportion as the velocity is modified by compounding of the wheels. Thus, when the velocity at the pitch circle is increased its strength is increased, and per contra when its velocity is decreased its strength is decreased, when considered in proportion to the duty. When, however, the wheels are upon long shafts, or when they overhang the bearing of the shaft, the corner contact will from tension of the shaft, continue much longer than when the shaft is maintained rigid.

It is obvious that if a wheel transmits a certain amount of power, the pressure of tooth upon tooth will depend upon the number of teeth in contact, but since, in the case of very small wheels, that is to say, pinions of the smallest diameter of the given pitch that will transmit continuous motion, it occurs that only one tooth is in continuous contact, it is obvious that each single tooth must have sufficient strength to withstand the whole of the pressure when worn to the limits to which the teeth are supposed to wear. But when the pinion is so small that it has but one tooth in continuous contact, that contact takes place nearer the line of centres and to the root of the tooth, and therefore at a less leverage to the line of fracture, hence the ultimate strength of the tooth is proportionately increased. On the other hand, however, the whole stress of the wheel being concentrated on the arc of contact of one tooth only (instead of upon two or more teeth as in larger wheels), the wear is proportionately greater; hence, in a short time the teeth of the pinion are found to be thinner than those on the other wheel or wheels. The multiplicity of conditions under which small wheels may work with relation to the number of teeth in contact, the average leverage of the point of contact from the root of the tooth, the shape of the tooth, &c., renders it desirable in a general rule to suppose that the whole strain falls upon one tooth, so that the calculation shall give results to meet the requirements when a single tooth only is in continuous contact.

It follows, then, that the thickness of tooth arrived at by calculation should be that which will give to a tooth, when worn to the extreme thinness allowed, sufficient strength (with a proper margin of safety) to transmit the whole of the power transmitted by the wheel.

The margin (or factor) of safety, or in other words, the number of times the strength of the tooth should exceed the amount of power transmitted, varies (according to the conditions under which the wheels work) between 5 and 10.

The lesser factor may be used for slow speeds when the power is continuously and uniformly transmitted. The greater factor is necessary when the wheels are subjected to violent shocks and the direction of revolution requires to be reversed.

In pattern-cast teeth, contact between the teeth of one wheel and those of the other frequently occurs at one corner only, as shown in Fig. 179, and the line of fracture is in the direction denoted by the diagonal dotted lines. The causes of this corner contact have been already explained, but it may be added that as the wheels wear, the contact extends across the full breadths of the teeth, and the strength in proportion to the duty, therefore, steadily increases from the time the new wheels have action until the wear has caused contact fully across the breadth. Tredgold's rule for finding the proper thickness of tooth for a given stress upon cast-iron teeth loaded at the corner as in Fig. 179 and supposed to have a velocity of three feet per second of time, is as follows :—

Rule.—Divide the stress in pounds at the pitch circle by 1500, and the square root of the quotient is the required thickness of tooth in inches or parts of an inch.

In the results obtained by the employment of this rule, an allowance of one-third the thickness for wear, and the margin for safety is included, so that the thickness of tooth arrived at is that to be given to the actual tooth. Further, the rule supposes the breadth of the tooth to be not less than twice the height of the same, any extra breadth not affecting the result (as already explained), when the pressure falls on a corner of the tooth.

In practical application, however, the diameter of the wheel at the pitch circle is generally, or at least often a fixed quantity, as well as the amount of stress, and it will happen as a rule that taking the stress as a fixed element and arriving at the thickness of the tooth by calculation, the required diameter of wheel, or what is the same thing, its circumference, will not be such as to

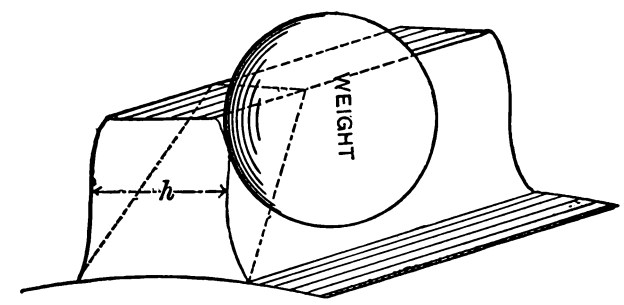

Fig. 179.

contain the exact number of teeth of the thickness found by the calculation, and still give the desired amount of side clearance. It is desirable, therefore, to deal with the stress upon the tooth at the pitch circle, and the diameter, radius, or circumference of the pitch circle, and its velocity, and deduce therefrom the required thickness for the teeth, and conform the pitch to the requirements as to clearance from the tooth thickness thus obtained.

To deduce the thickness of the teeth from these elements we have Robertson Buchanan's rule, which is as follows :—

Find the amount of horse-power employed to move the wheel, and divide such horse-power by the volocity in feet per second of the pitch line of the wheel. Extract the square root of the quotient, and three-fourths of this root will be the least thickness of the tooth. To the result thus obtained, there must be added the allowance for wear of the teeth and the width of the space including the clearance which will determine the number of teeth in the wheel.

In conforming strictly to this rule the difficulty is met with that it would give fractional pitches not usually employed and difficult to measure on an existing wheel. Cast wheels kept on hand or in stock by machinists have usually the following standard :—

Beginning with an inch pitch, the pitches increase by $\frac{1}{8}$ inch up to 3-inch pitch, from 3 to 4-inch pitches the increase is by $\frac{1}{4}$ inch, and from 4-inch pitch and upwards the increase is by $\frac{1}{2}$ inch. Now, under the rule the pitches would, with the clearance made to bear a certain proportion to the pitch, be in odd fractions of an inch.

It appears then, that, if in a calculation to obtain the necessary thickness of tooth, the diameter of the pitch circle is not an element, the rule cannot be strictly adhered to unless the diameter of the pitch circle be varied to suit the calculated thickness of

tooth; or unless either the clearance, factor of safety, or amount of tooth thickness allowed for wear be varied to admit of the thickness of tooth arrived at by the calculation. But if the diameter of the pitch circle is one of the elements considered in arriving at the thickness of tooth requisite under given conditions, the pitch must, as a rule, either be in odd fractions, or else the allowance for wear, factor of safety, or amount of side clearance cannot bear a definite proportion to the pitch. But the allowance for clearance is in practice always a constant proportion of the pitch, and under these circumstances, all that can be done when the circumstances require a definite circumference of pitch circle, is to select such a pitch as will nearest meet the requirements of tooth thickness as found by calculation, while following the rule of making the clearance a constant proportion of the pitch. When following this plan gives a thinner tooth than the calculation calls for, the factor of safety and the allowance for wear are reduced. But this is of little consequence whenever more than one tooth on each wheel is in contact, because the rules provide for all the stress falling on one tooth. When, however, the number of teeth in the pinion is so small that one tooth only is in contact, it is better to select a pitch that will give a thicker rather than a thinner tooth than called for by the calculation, providing, of course, that the pitch be less than the arc of contact, so that the motion shall be continuous.

But when the pinions are shrouded, that is, have flanges at each end, the teeth are strengthened; and since the wear will continue greater than in wheels having more teeth in contact, the shrouding may be regarded as a provision against breakage in consequence of the reduction of tooth thickness resulting from wear.

In the following table is given the thickness of the tooth for a given stress at the pitch circle, calculated from Tredgold's rule for teeth supposed to have contact when new at one corner only.

Stress in lbs. at pitch circle.	Thickness of tooth in inches.	Actual pitches to which wheels may be made.
400	·52	$1\frac{1}{8}$ to $1\frac{1}{4}$
800	·75	$1\frac{1}{4}$ „ $1\frac{3}{8}$
1,200	·90	$1\frac{3}{8}$ „ 2
1,600	1·03	2 „ $2\frac{1}{8}$
2,000	1·15	$2\frac{1}{4}$ „ $2\frac{3}{8}$
2,400	1·26	$2\frac{3}{8}$ „ $2\frac{3}{8}$
2,800	1·36	$2\frac{3}{8}$ „ $2\frac{1}{4}$
3,200	1·43	$2\frac{1}{4}$ „ 3
3,600	1·56	$3\frac{1}{8}$ „ $3\frac{1}{4}$
4,000	1·63	$3\frac{1}{4}$ „ $3\frac{3}{8}$
4,400	1·70	$3\frac{3}{8}$ „ $3\frac{1}{2}$
4,800	1·78	$3\frac{1}{2}$ „ $3\frac{3}{8}$
5,200	1·86	$3\frac{3}{8}$ „ $3\frac{3}{4}$
5,600	1·93	$3\frac{3}{4}$ „ 4
6,000	2·00	4 „ $4\frac{1}{4}$

In wheels that have their teeth cut to form in a gear-cutting machine the thickness of tooth at any point in the depth is equal at any point across the breadth; hence, supposing the wheels to be properly keyed to their shafts so that the pitch line across the breadth of the wheel stands parallel to the axis of the shaft, the contact of tooth upon tooth occurs across the full breadth of the tooth.

As the practical result of these conditions we have three important advantages: first, that the stress being exerted along the full breadth of the tooth instead of on one corner only, the tooth is stronger (with a given breadth and thickness) in proportion to the duty; second, that with a given pitch, the thickness and therefore the margin for safety and allowance for wear are increased, because the tooth may be increased in thickness at the expense of the clearance, which need be merely sufficient to prevent contact on both sides of the spaces so as to prevent the teeth from locking in the spaces; and thirdly, because the teeth will not be subject to sudden impacts or shocks of tooth upon tooth by reason of back lash.

In determining the strength of cut gear-teeth we may suppose the weight to be disposed along the face at the extreme height of the tooth, in which case the theoretical shape of the tooth to possess equal strength at every point from the addendum circle to the root would be a parabola, as shown by the dotted lines in Fig. 180, which represents a tooth having radial flanks. In this case it is evident that the ultimate strength of the tooth is that due to the thickness at the root, because it is less than that at the pitch circle, and the strength, as a whole, is not greater than that at the weakest part. But since teeth with radial flanks are produced, as has been shown, with a generating circle equal in diameter to the radius of the pinion, and since with a generating circle bearing that ratio of diameter to diameter of pitch circle the acting part of the flank is limited, it is usual to fill in the

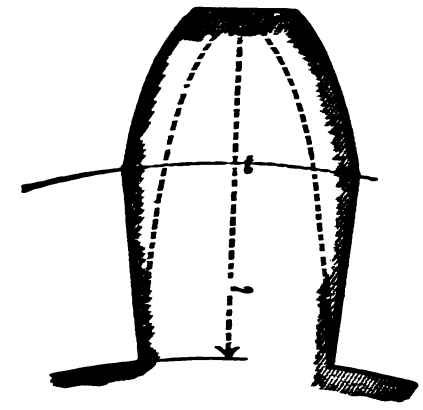

Fig. 180.

corners with fillets or rounded corners, as shown in Fig. 129; hence, the weakest part of the tooth will be where the radial line of the flank joins the fillet and, therefore, nearer the pitch circle than is the root. But as only the smallest wheel of the set has radial flanks and the flanks thicken as the diameter of the wheels increase, it is usual to take the thickness of the tooth at the pitch circle as representing the weakest part of the tooth, and, therefore, that from which the strength of the tooth is to be computed. This, however, is not actually the case even in teeth which have considerable spread at the roots, as is shown in Fig. 181, in which the shape of the tooth to possess equal strength throughout its depth is denoted by the parabolic dotted lines.

Considering a tooth as simply a beam supporting the strain as a weight we may calculate its strength as follows:—

Multiply the breadth of the tooth by the square of its thickness, and the product by the strength of the material, per square inch of section, of which the teeth are composed, and divide this last

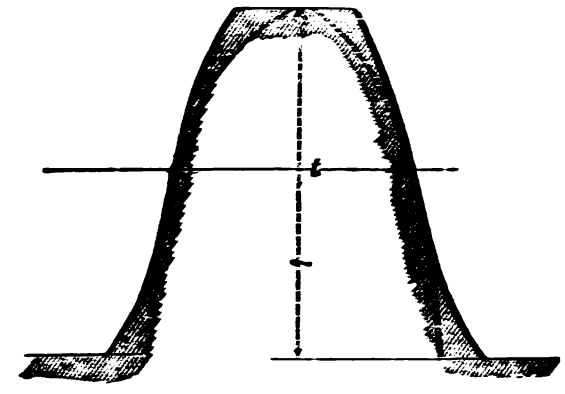

Fig. 181.

product by the distance of the pitch line from the root, and the quotient will give a tooth thickness having a strength equal to the weight of the load, but having no margin for safety, and no allowance for wear; hence, the result thus obtained must be multiplied by the factor of safety (which for this class of tooth may be taken as 6), and must have an additional thickness added to allow for wear, so that the factor of safety will be constant notwithstanding the wear.

Another, and in some respects more convenient method, for obtaining the strength of a tooth, is to take the strength of a tooth having 1-inch pitch, and 1 inch of breadth, and multiply this quantity of strength by the pitch and the face of the tooth it is required to find the strength of, both teeth being of the same material.

Example.—The safe working pressure for a cast-iron tooth of

an inch pitch, and an inch broad will transmit, being taken as 400 lbs., what pressure will a tooth of ¾-inch pitch and 3 inches broad transmit with safety?

Here 400 lbs. × ¾ pitch × 3 breadth = 900 = safe working pressure of tooth ¾-inch pitch and 3 inches broad.

Again, the safe working pressure of a cast-iron tooth, 1 inch in breadth and of 1-inch pitch, being considered as 400 lbs., what is the safe working pressure of a tooth of 1-inch pitch and 4-inch breadth?

Here 400 × 1 × 4 = 1600.

The philosophy of this is apparent when we consider that four wheels of 1-inch pitch and an inch face, placed together side by side, would constitute, if welded together, one wheel of an inch pitch and 4 inches face. (The term *face* is applied to the wheel, and the term breadth to the tooth, because such is the custom of the workshop, both terms, however, mean, in the case of spur-wheels, the dimension of the tooth in a direction parallel to the axis of the wheel shaft or wheel bore.)

The following table gives the safe working pressures for wheels having an inch pitch and an inch face when working at the given velocities, S.W.P. standing for "safe working pressure:"—

Velocity of pitch circle in feet per second.	S.W.P. for cast-iron spur gears.	S.W.P. for spur mortise gears.	S.W.P. for cast-iron bevel gears.	S.W.P. for bevel mortise gear.
2	368	178	258	178
3	322	178	225	157
6	255	178	178	125
12	203	142	142	99
18	177	124	124	87
24	161	113	113	79
30	150	105	105	74
36	140	98	98	69
42	133	93	93	65
48	127	88	88	62

For velocities less than 2 feet per second, use the same value as for 2 feet per second.

The proportions, in terms of the pitch, upon which this table is based, are as follows:—

Thickness of iron teeth	.	·395 of the pitch.
„ wooden „	.	·595 „
Height of addendum	.	·28 „
Depth below pitch line	.	·32 „

The table is based upon 400 lbs. per inch of face for an inch pitch, as the safe working pressure of mortise wheel teeth or cogs; it may be noted that there is considerable difference of opinion. They are claimed by some to be in many cases practically stronger than teeth of cast iron. This may be, and probably is, the case when the conditions are such that the teeth being rigid and rigidly held (as in the case of cast-iron teeth), there is but one tooth on each wheel in contact. But when there is so nearly contact between two teeth on each wheel that but little elasticity in the teeth would cause a second pair of teeth to have contact, then the elasticity of the wood would cause this second contact. Added to this, however, we have the fact that under conditions where violent shock occurs the cog would have sufficient elasticity to give, or spring, and thus break the shock which cast iron would resist to the point of rupture. It is under these conditions, which mainly occur in high velocities with one of the wheels having cast teeth, that mortise wheels, or cogging, is employed, possessing the advantage that a broken or worn-out tooth, or teeth, may be readily replaced. It is usual, however, to assign to wooden teeth a value of strength more nearly equal to that of its strength in proportion to that of cast iron; hence, Thomas Box allows a wood tooth a value of about $\frac{3}{10}$ths the strength of cast iron; a value as high as $\frac{7}{10}$ths is, however, assigned by other authorities. But the strength of the tooth cannot exceed that at the top of the shank, where it fits into the mortise of the wheel, and on account of the leverage of the pressure the width of the mortise should exceed the thickness of the tooth.

In some practice, the mortise teeth, or cogs, are made thicker in proportion to the pitch than the teeth on the iron wheel; thus Professor Unwin, in his "Elements of Machine Design," gives the following as "good proportions":—

Thickness of iron teeth	.	0·395 of the pitch.
„ wood cogs	.	0·595 „ „

which makes the cogs $\frac{2}{10}$ths inch thicker than the teeth.

The mortises in the wheel rim are made taper in both the breadth and the width, which enables the tooth shank to be more accurately fitted, and also of being driven more tightly home, than if parallel. The amount of this taper is a matter of judgment, but it may be observed that the greater the taper the more labor there is involved in fitting, and the more strain there is thrown upon the pins when locking the teeth with a given amount of strain. While the less the taper, the more care required to obtain an accurate fit. Taking these two elements into consideration, $\frac{1}{8}$th inch of taper in a length of 4 inches may be given as a desirable proportion.

As an evidence of the durability of wooden teeth, there appeared in *Engineering* of January 7th, 1879, the illustration shown in Fig. 182, which represents a cog from a wheel of 14 ft. ½ in. diameter, and having a 10-inch face, its pinion being 4 ft. in diameter. This cog had been running for 26½ years, day and night; not a cog in the wheel having been touched during that time. Its average revolutions were 38 per minute, the power

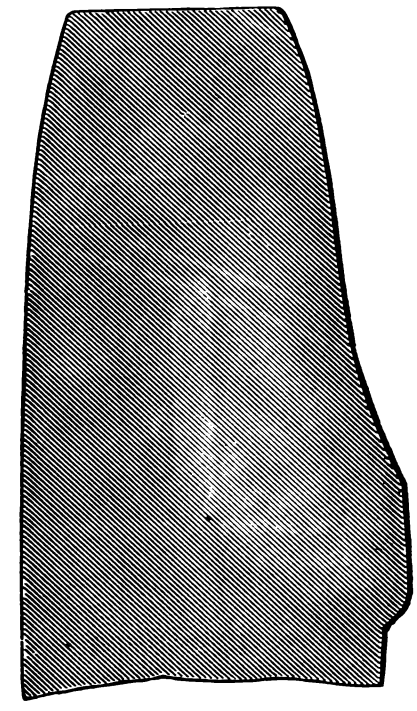

Fig. 182.

developed by the engine being from 90 to 100 indicated horse-power. The teeth were composed of beech, and had been greased twice a week, with tallow and plumbago ore.

Since the width of the face of a wheel influences its wear (by providing a larger area of contact over which the pressure may be distributed, as well as increasing the strength), two methods of proportioning the breadth may be adopted. First, it may be made a certain proportion of the pitch; and secondly, it may be proportioned to the pressure transmitted and the number of revolutions. The desirability of the second is manifest when we consider that each tooth will pass through the arcs of contact (and thus be subjected to wear) once during each revolution; hence, by making the number of revolutions an element in the calculation to find the breadth, the latter is more in proportion to the wear than it would be if proportioned to the pitch.

It is obvious that the breadth should be sufficient to afford the required degree of strength with a suitable factor of safety, and allowance for wear of the smallest wheel in the pair or set, as the case may be.

According to Reuleaux, the face of a wheel should never be less than that obtained by multiplying the gross pressure, transmitted in lbs., by the revolutions per minute, and dividing the product by 28,000.

In the case of bevel-wheels the pitch increases, as the perimeter

of the wheel is approached, and the maximum pitch is usually taken as the designated pitch of the wheel. But the mean pitch is that which should be taken for the purposes of calculating the strength, it being in the middle of the tooth breadth. The mean pitch is also the diameter of the pitch circle, used for ascertaining the velocity of the wheel as an element in calculating the safe pressure, or the amount of power the wheel is capable of transmitting, and it is upon this basis that the values for bevel-wheels in the above table are computed.

In many cases it is required to find the amount of horse-power a wheel will transmit, or the proportions requisite for a wheel to transmit a given horse-power; and as an aid to the necessary calculations, the following table is given of the amount of horse-power that may be transmitted with safety, by the various wheels at the given velocities, with a wheel of an inch pitch and an inch face, from which that for other pitches and faces may be obtained by proportion.

TABLE SHOWING THE HORSE-POWER WHICH DIFFERENT KINDS OF GEAR-WHEELS OF ONE INCH PITCH AND ONE INCH FACE WILL SAFELY TRANSMIT AT VARIOUS VELOCITIES OF PITCH CIRCLE.

Velocity of Pitch Circle in Feet per Second.	Spur-Wheels. H.P.	Spur Mortise Wheels. H.P.	Bevel-Wheels. H.P.	Bevel Mortise Wheels. H.P.
2	1·338	·647	·938	·647
3	1·756	·971	1·227	·856
6	2·782	1·76	1·76	1·363
12	4·43	3·1	3·1	2·16
18	5·793	4·058	4·058	2·847
24	7·025	4·931	4·931	3·447
30	8·182	5·727	5·727	4·036
36	9·163	6·414	6·414	4·516
42	10·156	7·102	7·102	4·963
48	11·083	7·680	7·680	5·411

In this table, as in the preceding one, the safe working pressure for 1-inch pitch and 1-inch breadth of face is supposed to be 400 lbs.

In cast gearing, the mould for which is made by a gear moulding machine, the element of draft to permit the extraction of the pattern is reduced: hence, the pressure of tooth upon tooth may be supposed to be along the full breadth of the tooth instead of at one corner only, as in the case of pattern-moulded teeth. But from the inaccuracies which may occur from unequal contraction in the cooling of the casting, and from possible warping of the casting while cooling, which is sure to occur to some extent, however small the amount may be, it is not to be presumed that the contact of the teeth of one wheel will be in all the teeth as perfect across the full breadth as in the case of machine-cut teeth. Furthermore, the clearance allowed for machine-moulded teeth, while considerably less than that allowed for pattern-moulded teeth, is greater than that allowed for machine-cut teeth; hence, the strength of machine-moulded teeth in proportion to the pitch lies somewhere between that of pattern-moulded and machine-cut teeth—but exactly where, it would be difficult to determine in the absence of experiments made for the purpose of ascertaining.

It is not improbable, however, that the contact of tooth upon tooth extends in cast gears across at least two-thirds of the breadth of the tooth, in which case the rules for ascertaining the strength of cut teeth of equal thickness may be employed, substituting $\frac{2}{3}$rds of the actual tooth breadth as the breadth for the purposes of the calculation.

If instead of supposing all the strain to fall upon one tooth and calculating the necessary strength of the teeth upon that basis (as is necessary in interchangeable gearing, because these conditions may exist in the case of the smallest pinion that can be used in pitch), the actual working condition of each separate application of gears be considered, it will appear that with a given diameter of pitch circle, all other things being equal, the arc of contact will remain constant whatever the pitch of the teeth, or in other words is independent of the pitch, and it follows that when the thickness of iron necessary to withstand (with the allowances for wear and factor of safety) the given stress under the given velocity has been determined, it may be disposed in a coarse pitch that will give one tooth always in contact, or a finer pitch that will give two or more teeth always in contact, the strength in proportion to the duty remaining the same in both cases.

In this case the expense of producing the wheel patterns or in trimming the teeth is to be considered, because if there are a train of wheels the finer pitch would obviously involve the construction and dressing to shape of a much greater number of teeth on each wheel in the train, thus increasing the labor. When, however, it is required to reduce the pinion to a minimum diameter, it is obvious that this may be accomplished by selecting the finer pitch, because the finer the pitch, the less the diameter of the wheel may be. Thus with a given diameter of pitch circle it is possible to select a pitch so fine that motion from one wheel may be communicated to another, whatever the diameter of the pitch circle may be, the limit being bounded by the practicability of casting or producing teeth of the necessary fineness of pitch. The durability of a wheel having a fine pitch is greater for two reasons: first, because the metal nearest the cast surface of cast iron is stronger than the internal metal, and the finer pitch would have more of this surface to withstand the wear; and second, because in a wheel of a given width there would be two points, or twice the area of metal, to withstand the abrasion, it being remembered that the point of contact is a line which partly rolls and partly slides along the depth of the tooth as the wheel rotates, and that with two teeth in contact on each wheel there are two of such lines. There is also less sliding or rubbing action of the teeth, but this is offset by the fact that there are more teeth in contact, and that there are therefore a greater number of teeth simultaneously rubbing or sliding one upon the other.

But when we deal with the number of teeth the circumstances are altered; thus with teeth of epicycloidal form it is manifestly impossible to communicate constant motion with a driving wheel having but one tooth, or to receive motion on a follower having but one tooth. The number of teeth must always be such that there is at all times a tooth of each wheel within the arc of action, or in contact, so that one pair of teeth may come into contact before the contact of the preceding teeth has ceased.

In the construction of wheels designed to transmit power as well as simple motion, as is the case with the wheels employed in machine work, however, it is not considered desirable to employ wheels containing a less number of teeth than 12. The diameter of the wheel bearing such a relation to the pitch that both wheels containing the same number of teeth (12), the motion will be communicated from one to the other continuously.

It is obvious that as the number of teeth in one of the wheels (of a pair in gear) is increased the number of teeth in the other may be (within certain limits) diminished, and still be capable of transmitting continuous motion. Thus a pinion containing, say 8 teeth, may be capable of receiving continuous motion from a rack in continuous motion, while it would not be capable of receiving continuous motion from a pinion having 4 teeth; and as the requirements of machine construction often call for the transmission of motion from one pinion to another of equal diameters, and as small as possible, 12 teeth are the smallest number it is considered desirable for a pinion to contain, except it be in the case of an internal wheel, in which the arc of contact is greater in proportion to the diameters than in spur-wheels, and continuous motion can therefore be transmitted either with coarser pitches or smaller diameters of pinion.

For convenience in calculating the pitch diameter at pitch circle, or pitch diameter as it is termed, and the number of teeth of wheels, the following rules and table extracted from the *Cincinnati Artisan* and arranged from a table by D. A. Clarke, are given. The first column gives the pitch, the following nine columns give the pitch diameters of wheels for each pitch from 1 tooth to 9. By multiplying these numbers by 10 we have the pitch diameters from 10 to 90 teeth, increasing by *tens;* by multiplying by 100 we likewise have the pitch diameters from 100 to 900, increasing by *hundreds.*

TABLE FOR DETERMINING THE RELATION BETWEEN PITCH DIAMETER, PITCH, AND NUMBER OF TEETH IN GEAR-WHEELS.

Pitch.	Number of Teeth.								
	1.	2.	3.	4.	5.	6.	7.	8.	9.
1	·3183	·6366	·9549	1·2732	1·5915	1·9099	2·2282	2·5465	2·8648
1⅛	·3581	·7162	1·0743	1·4324	1·7905	2·1486	2·5067	2·8648	3·2229
1¼	·3979	·7958	1·1937	1·5915	1·9894	2·3873	2·7852	3·1831	3·5810
1⅜	·4377	·8753	1·3130	1·7507	2·1884	2·6260	3·0637	3·5014	3·9391
1½	·4775	·9549	1·4324	1·9099	2·3873	2·8648	3·3422	3·8197	4·2971
1⅝	·5173	1·0345	1·5517	2·0690	2·5862	3·1035	3·6207	4·1380	4·6552
1¾	·5570	1·1141	1·6711	2·2282	2·7852	3·3422	3·8993	4·4563	5·0134
1⅞	·5968	1·1937	1·7905	2·3873	2·9841	3·5810	4·1778	4·7746	5·3714
2	·6366	1·2732	1·9099	2·5465	3·1831	3·8197	4·4563	5·0929	5·7296
2⅛	·6764	1·3528	2·0292	2·7056	3·3820	4·0584	4·7348	5·4112	6·0877
2¼	·7162	1·4324	2·1485	2·8648	3·5810	4·2972	5·0134	5·7296	6·4457
2⅜	·7560	1·5120	2·2679	3·0239	3·7799	4·5359	5·2919	6·0479	6·8038
2½	·7958	1·5915	2·3873	3·1831	3·9789	4·7746	5·5704	6·3662	7·1619
2⅝	·8355	1·6711	2·5067	3·3422	4·1778	5·0133	5·8499	6·6845	7·5200
2¾	·8753	1·7507	2·6260	3·5014	4·3767	5·2521	6·1274	7·0028	7·8781
2⅞	·9151	1·8303	2·7454	3·6605	4·5757	5·4908	6·4059	7·3211	8.2362
3	·9549	1·9099	2·8648	3·8197	4·7746	5·7296	6·6845	7·6394	8·5943
3¼	1·0345	2·0690	3·1035	4·1380	5·1725	6·2070	7·2415	8·2760	9·3105
3½	1·1141	2·2282	3·3422	4·4563	5·5704	6·6845	7·7986	8·9126	10·0268
3¾	1·1937	2·3873	3·5810	4·7746	5·9683	7·1619	8·3556	9·5493	10·7429
4	1·2732	2·5465	3·8197	5·0929	6·3662	7·6394	8·9127	10·1839	11·4591
4½	1·4324	2·8643	4·2972	5·7296	7·1619	8·5943	10·0267	11·4591	12·8915
5	1·5915	3·1831	4·7746	6·3662	7·9577	9·5493	11·1408	12·7324	14·3240
5½	1 7507	3·5014	5·2521	7·0028	8·7535	10·5042	12·2549	14·0056	15·7563
6	1·9099	3·8196	5·7295	7·6394	9·5493	11·4591	13·3690	15·2788	17·1887

The following rules and examples show how the table is used:

Rule 1.—Given —— number of teeth and pitch; to find —— pitch diameter.

Select from table in columns opposite the given pitch—

First, the value corresponding to the number of units in the number of teeth.

Second, the value corresponding to the number of tens, and multiply this by 10.

Third, the value corresponding to the number of hundreds, and multiply this by 100. Add these together, and their sum is the pitch diameter required.

Example.—What is the pitch diameter of a wheel with 128 teeth, 1½ inches pitch?

We find in line corresponding to 1½ inch pitch—

Pitch diameter for	8 teeth	. . . .	3·8197
,,	,,	20 ,,	. . . .	9·549
,,	,,	100 ,,	. . . .	47·75
,,	,,	128 ,,	. . . .	61·1187

Or about 61⅛″. Answer.

Rule 2.—Given ——pitch diameter and number of teeth; to find ——pitch.

First, ascertain by Rule 1 the pitch diameter for a wheel of 1-*inch pitch*, and the given *number of teeth*.

Second, divide *given pitch diameter* by the *pitch diameter* for 1-*inch pitch*.

The quotient is the pitch desired.

Example.—What is the pitch of a wheel with 148 teeth, the pitch diameter being 72″?

First, pitch diameter for 148 teeth, 1-inch pitch, is—

8 teeth	. . . . .	2·5465
40 ,,	. . . . .	12·732
100 ,,	. . . . .	31·83
148		47·1085

Second, $\frac{72}{47\cdot1}$ = 1·53 inch equal to the pitch.

This is nearly 1½-inch pitch, and if possible the diameter would be reduced or the number of teeth increased so as to make the wheel exactly 1½-inch pitch.

Rule 3.—Given ——pitch and pitch diamer; to find —— number of teeth.

First, ascertain from table the *pitch diameter* for 1 *tooth* of the given *pitch*.

Second, divide the *given pitch diameter* by the *value* found in table.

The quotient is the number required.

Example.—What is the number of teeth in a wheel whose pitch diameter is 42 inches, and pitch is 2½ inches?

First, the pitch diameter, 1 tooth, 2½-inch pitch, is 0·7958 inches.

Second. $\frac{42}{0\cdot7958}$ = 52·8. Answer

This gives a fractional number of teeth, which is impossible; so the pitch diameter will have to be increased to correspond to 53 teeth, or the pitch changed so as to have the number of teeth come an even number.

Whenever two parallel shafts are connected together by gearing, the distance between centres being a fixed quantity, and the speeds of the shafts being of a fixed ratio, then the pitch is generally the best proportion to be changed, and necessarily may not be of standard size. Suppose there are two shafts situated in this manner, so that the distance between their centres is 84 inches, and the speed of one is 2½ times that of the other, what size wheels shall be used? In this case the pitch diameter and number of teeth of the wheel on the slow-running shaft have to be 2½ times those of the wheel on the fast-running shaft; so that 84 inches must be divided into two parts, one of which is 2½ times the other, and these quantities will be the pitch radii of the wheels; that is, 84 inches are to be divided into 3½ equal parts, 1 of which is the radius of one wheel, and 2½ of which the radius of the other, thus $\frac{84''}{3\frac{1}{2}}$ = 24 inches. So that 24 inches is the pitch radius of pinion, pitch diameter =48 inches; and 2½ × 24 inches =60 inches is the pitch radius of the wheel, pitch diameter = 120 inches. The pitch used depends upon the power to be transmitted; suppose that 2⅝ inches had been decided as about the pitch to be used, it is found by Rule 3 that the number of teeth are respectively 143·6, and 57·4 for wheel and pinion. As this is impossible, some whole number of teeth, nearest these in value,

have to be taken, one of which is 2½ times the other; thus 145 and 58 are the nearest, and the pitch for these values is found by Rule 2 to be 2·6 inches, being the best that can be done under the circumstances.

The forms of spur-gearing having their teeth at an angle to the axis, or formed in advancing steps shown in Figs. 183 and 184, were designed by Dr. Hooke, and "were intended," says the inventor, "first to make a piece of wheel work so that both the

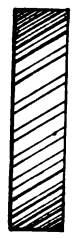

Fig. 183.

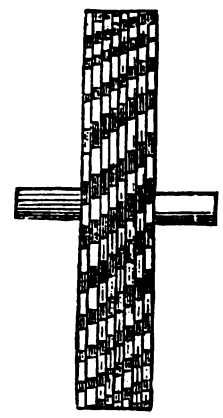

Fig. 184.

wheel and pinion, though of never so small a size, shall have as great a number of teeth as shall be desired, and yet neither weaken the wheels nor make the teeth so small as not to be practicable by any ordinary workman. Next that the motion shall be so equally communicated from the wheel to the pinion that the work being well made there can be no inequality of force or motion communicated.

"Thirdly, that the point of touching and bearing shall be always in the line that joins the two centres together.

"Fourthly, that it shall have *no manner* of *rubbing*, nor be more difficult to make than common wheel work."

The objections to this form of wheel lies in the difficulty of making the pattern and of moulding it in the foundry, and as a result it is rarely employed at the present day. For racks, however, two or more separate racks are cast and bolted together to form the full width of rack as shown in Fig. 185. This arrangement permits of the adjustment of the width of step so as to take up the lost motion due to the wear of the tooth curves.

Another objection to the sloping of the teeth, as in Fig. 183, is that it induces an end pressure tending to force the wheels apart *laterally*, and this causes *end* wear on the journals and bearings.

To obviate this difficulty the form of gear shown in Fig. 186 is employed, the angles of the teeth from each side of the wheel to

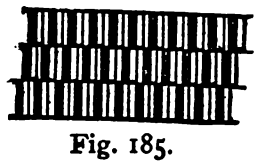

Fig. 185.

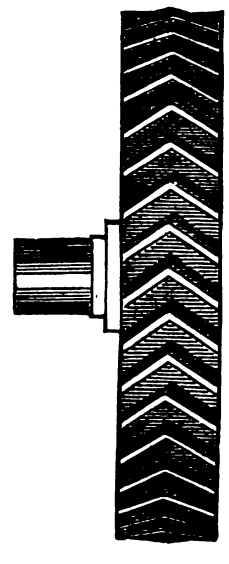

Fig. 186.

its centre being made equal so as to equalize the lateral pressure. It is obvious that the stepped gear, Fig. 184, is simply equivalent to a number of thin wheels bolted together to form a thick one, but possessing the advantage that with a sufficient number of steps, as in the figure, there is always contact on the line of centres, and that the condition of constant contact at the line of centres will be approached in proportion to the number of steps in the wheel, providing that the steps progress in one continuous direction across the wheel as in Fig. 184. The action of the wheels will, in this event, be smoother, because there will be less pressure tending to force the wheels apart.

But in the form of gearing shown in Fig. 183, the contact of the teeth will bear every instant at a single point, which, as the wheels revolve, will pass from one end to the other of the tooth, a fresh contact always beginning on the first side immediately before the preceding contact has ceased on the opposite side. The contact, moreover, being always in the plane of the centres of the pair, the action is reduced to that of rolling, and as there is no sliding motion there is consequently no rubbing friction between the teeth.

A further modification of Dr. Hooke's gearing has been somewhat extensively adopted, especially in cotton-spinning machines. This consists, when the direction of the motion is simply to be changed to an angle of 90°, in forming the teeth upon the periphery of the pair at an angle of 45° to the respective axes of the wheels, as in Figs. 187 and 188; it will then be perceived that if the sloped teeth be presented to each other in such a way as to have exactly the same horizontal angle, the wheels will gear together, and motion being communicated to one axis the same will be transmitted to the other at a right angle to it, as in a common bevel pair. Thus if the wheel A upon a horizontal

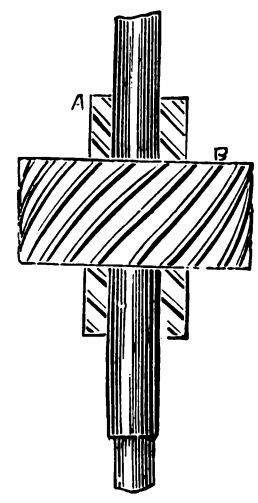

Fig. 187.

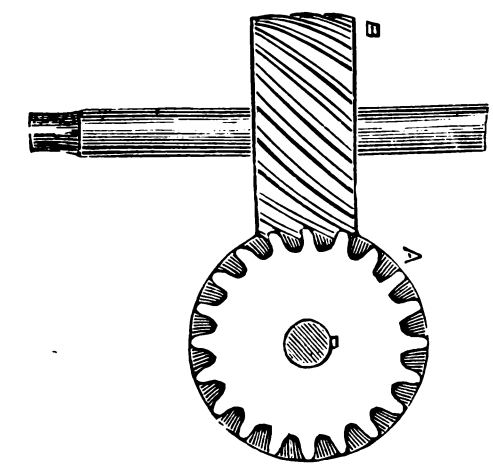

Fig. 188.

shaft have the teeth formed upon its circumference at an angle of 45° to the plane of its axis it can gear with a similar wheel B upon a vertical axis. Let it be upon the driving shaft and the motion will be changed in direction as if A and B were a pair of bevel-wheels of the ordinary kind, and, as with bevels generally, the direction of motion will be changed through an equal angle to the sum of the angles which the teeth of the wheels of the pair form with their respective axes. The objection in respect of lateral or end pressure, however, applies to this form equally with that shown in Fig. 183, but in the case of a vertical shaft the end pressure may be (by sloping the teeth in the necessary direction) made to tend to lift the shaft and not force it down into the step bearing. This would act to keep the wheels in close contact by reason of the weight of the vertical shaft and at the same time reduce the friction between the end of that shaft and its step bearing. This renders this form of gearing preferable to skew bevels when employed upon vertical shafts.

It is obvious that gears, such as shown in Figs. 187 and 188 may be turned up in the lathe, because the teeth are simply portions of spirals wound about the circumference of the wheel. For a pair of wheels of equal diameter a cylindrical piece equal in length to the required breadth of the two wheels is turned up in the lathe, and the teeth may be cut in the same manner as cutting a thread in the lathe, that is to say. by traversing the tool the requisite distance per lathe revolution. In pitches above about ¼ inch, it will be necessary to shape one side of the tooth at a time on account of the broadness of the cutting edges. After the spiral (for the teeth are really spirals) is finished the

piece may be cut in two in the lathe and each half will form a wheel.

To find the full diameter to which to turn a cylinder for a pair of these wheels we proceed as in the following example: Required to cut a spiral wheel 5 inches in diameter and to have 30 teeth. First find the diametral pitch, thus 30 (number of teeth) ÷ 5 (diameter of wheel at pitch circle) = 6; thus there are 6 teeth or 6 parts to every inch of the wheel's diameter at the pitch circle; adding 2 of these parts to the diameter of the wheel, at the pitch circle we have 5 and $\frac{2}{6}$ of another inch, or $5\frac{2}{6}$ inches,

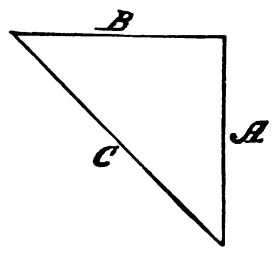

Fig. 189.

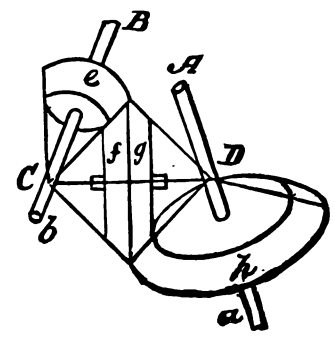

Fig. 190.

which is the full diameter of the wheel, or the diameter of the addendum, as it is termed.

It is now necessary to find what change wheels to put on the lathe to cut the teeth out the proper angle. Suppose then the axes of the shafts are at a right angle one to the other, and that the teeth therefore require to be at an angle of 45° to the axes of the respective wheels, then we have the following considerations. In Fig. 189 let the line A represent the circumference of the wheel, and B a line of equal length but at a right angle to it, then the line C, joining A,B, is at an angle of 45°. It is obvious then that if the traverse of the lathe tool be equal at each lathe revolution to the circumference of the wheel at the pitch circle, the angle of the teeth will be 45° to the axis of the wheel.

Hence, the change wheels on the lathe must be such as will traverse the tool a distance equal to the circumference at pitch circle of the wheel, and the wheels may be found as for ordinary screw cutting.

If, however, the axes of the shafts are at any other angle we may find the distance the lathe tool must travel per lathe revolution to give teeth of the required angle (or in other words the pitch of the spiral) by direct proportion, thus: Let it be required to find the angle or pitch for wheels to connect shafts at an angle of 25°, the wheels to have 20 teeth, and to be of 10 diametral pitch.

Here, 20 ÷ 10 = 2 = diameter of wheel at the pitch circle. The circumference of 2 inches being 6·28 inches we have, as the degrees of angle of the axes of the shafts are to 45°, so is 6·28 inches (the circumference of the wheels, to the pitch sought).

Here, 6·28 inches × 45° ÷ 25° = 11·3 inches, which is the required pitch for the spiral.

When the axes of the shafts are neither parallel nor meeting, motion from one shaft to another may be transmitted by means of a double gear. Thus (taking rolling cones of the diameters of the respective pitch circles as representing the wheels) in Fig. 190, let A be the shaft of gear *h*, and B *b* that of wheel *e*. Then a double gear-wheel having teeth on *f*, *g* may be placed as shown, and the face *f* will gear with *e*, while face *g* will gear with *h*, the cone surfaces meeting in a point as at C and D respectively, hence the velocity will be equal.

When the axial line of the shafts for two gear-wheels are nearly in line one with the other, motion may be transmitted by gearing the wheels as in Fig 191. This is a very strong method of gearing, because there are a large number of teeth in contact, hence the strain is distributed by a larger number of teeth and the wear is diminished.

Fig. 192 (from Willis's "Principles of Mechanism") is another method of constructing the same combination, which admits of

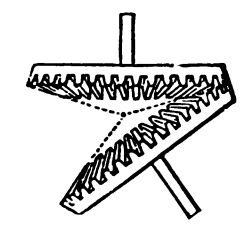

Fig. 191.

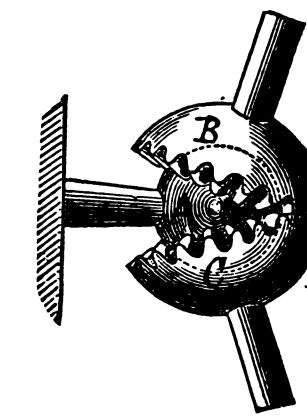

Fig. 192.

a steady support for the shafts at their point of intersection, A being a spherical bearing, and B,C being cupped to fit to A.

Rotary motion variable at different parts of a rotation may be obtained by means of gear-wheels varied in form from the true circle.

The commonest form of gearing for this purpose is elliptical gearing, the principles governing the construction of which are thus given by Professer McCord. "It is as well to begin at the foundation by defining the ellipse as a closed plane-curve, generated by the motion of a point subject to the condition that the sum of its distances from two fixed points within shall be

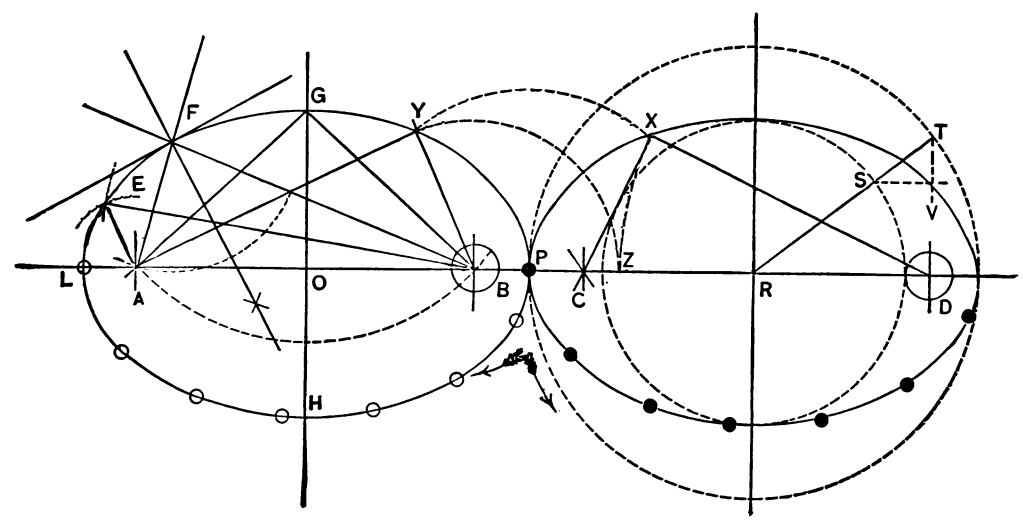

Fig. 193.

constant: Thus, in Fig. 193, A and B are the two fixed points, called the *foci;* L, E, F, G, P are points in the curve; and A F + F B = A E + E B. Also, A L + L B = A P + P B = A G + G B. From this it follows that A G = L O, O being the centre of the curve, and G the extremity of the minor axis, whence the foci may be found if the axes be assumed, or, if the foci and one axis be given, the other axis may be determined. It is also apparent that if about either focus, as B, we describe an arc with a radius greater than B P and less than B L, for instance B E, and about A another arc with radius A E = L P—B E, the intersection, E, of these arcs will be on the ellipse; and in this manner any desired number of points may be found, and the curve drawn by the aid of sweeps.

"Having completed this ellipse, prolong its major axis, and draw

a similar and equal one, with its foci, C, D, upon that prolongation, and tangent to the first one at P; then B D = L P. About B describe an arc with any radius, cutting the first ellipse at Y and the line L at Z; about D describe an arc with radius D Z, cutting the second ellipse in X; draw A Y, B Y, C X, and D X. Then A Y = D X, and B Y = C X, and because the ellipses are alike, the arcs P Y and P X are equal. If then B and D are taken as fixed centres, and the ellipses turn about them as shown by the arrows, X and Y will come together at Z on the line of centres; and the same is true of any points equally distant from P on the two curves. But this is the condition of rolling contact. We see, then, that in order that two ellipses may roll together, and serve as the pitch-lines of wheels, they must be equal and similar, the fixed centres must be at corresponding foci, and the distance between these centres must be equal to the major axis. Were they to be toothless wheels, it would evidently be essential that the outlines should be truly elliptical; but the changes of curvature in the ellipse are gradual, and circular arcs may be drawn

"In Fig. 194, A A and B B are centre lines passing through the major and minor axes of the ellipse, of which *a* is the axis or centre, *b c* is the major and *a e* half of the minor axis. Draw the rectangle *b f g c*, and then the diagonal line *b e;* at a right angle to *b e* draw line *f h* cutting B B at *i*. With radius *a e* and from *a* as a centre draw the dotted arc *e j*, giving the point *j* on the line B B. From centre *k*, which is on line B B, and central between *b* and *j*, draw the semicircle *b m j*, cutting A A at *l*. Draw the radius of the semicircle *b m j* cutting *f g* at *n*. With radius *m n* mark on A A, at and from *a* as a centre, the point *o*. With radius *h o* and from centre *h* draw the arc *p o q*. With radius *a l* and from *b* and *c* as centres draw arcs cutting *p o q* at the points *p q*. Draw the lines *h p r* and *h q s*, and also the lines *p i t* and *q v w*. From *h* as centre draw that part of the ellipse lying between *r* and *s*. With radius *p r* and from *p* as a centre draw that part of the ellipse lying between *r* and *t*. With radius *q s* and from *q* draw the ellipse from *s* to *w*. With radius *i t* and from *i* as a centre draw the ellipse from *t* to *b*. With radius *v w*

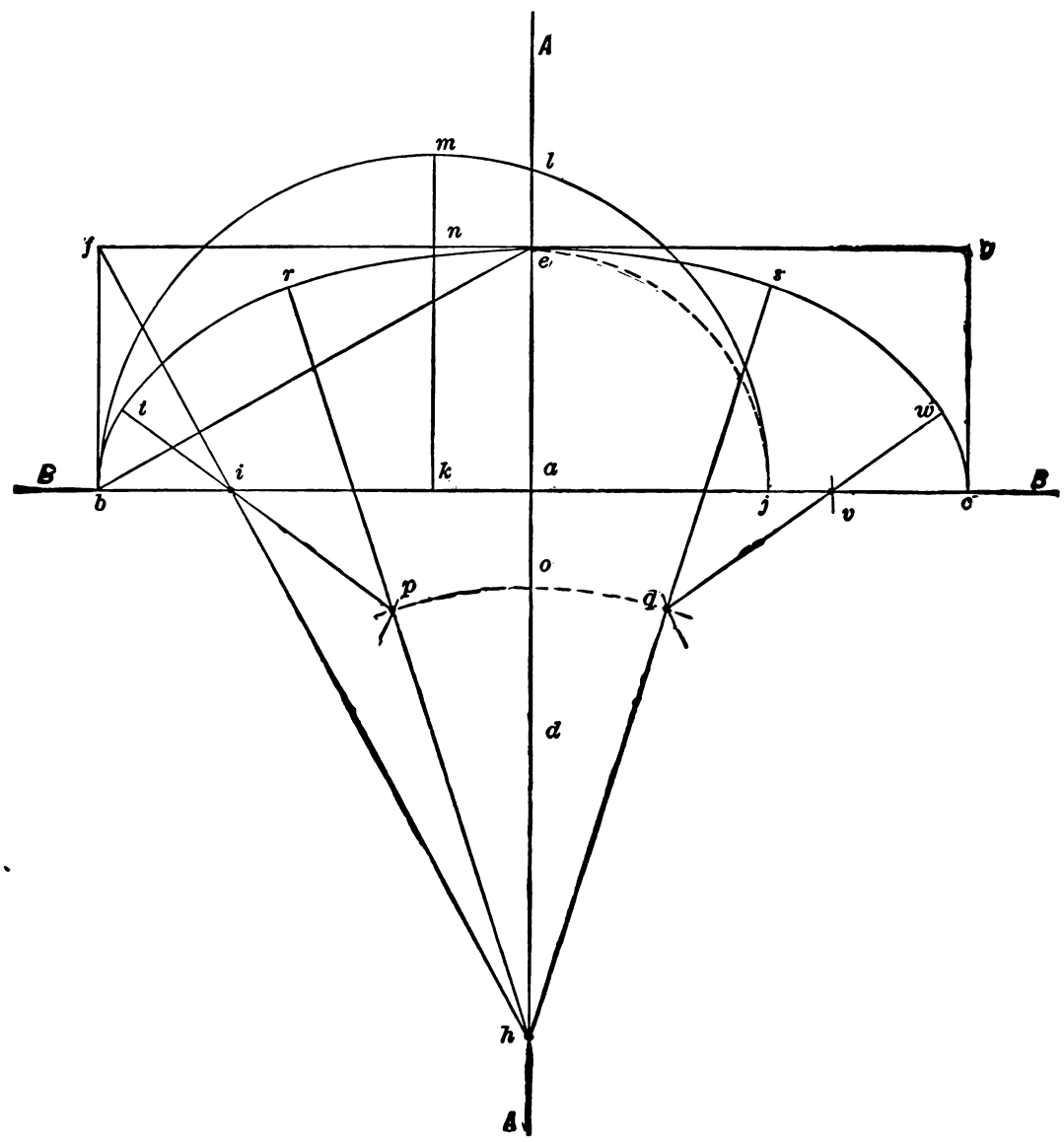

Fig. 194.

so nearly coinciding with it, that when teeth are employed, the errors resulting from the substitution are quite inappreciable. Nevertheless, the rapidity of these changes varies so much in ellipses of different proportions, that we believe it to be practically better to draw the curve accurately first, and to find the radii of the approximating arcs by trial and error, than to trust to any definite rule for determining them; and for this reason we give a second and more convenient method of finding points, in connection with the ellipse whose centre is R, Fig. 193. About the centre describe two circles, as shown, whose diameters are the major and minor axes; draw any radius, as R T, cutting the first circle in T, and the second in S; through T draw a parallel to one axis, through S a parallel to the other, and the intersection, V, will lie on the curve. In the left hand ellipse, the line bisecting the angle A F B is normal to the curve at F, and the perpendicular to it is tangent at the same point, and bisects the angles adjacent to A F B, formed by prolonging A F, B F.

"To mark the pitch line we proceed as follows:—

and from *v* as a centre draw the ellipse from *w* to *c*, and one half the ellipse will be drawn. It will be seen that the whole construction has been performed to find the centres *h p q i* and *v*, and that while *v* and *i* may be used to carry the curve around the other side or half of the ellipse, new centres must be provided for *h p* and *q;* these new centres correspond in position to *h p q*.

"If it were possible to subdivide the ellipse into equal parts it would be unnecessary to resort to these processes of approximately representing the two curves by arcs of circles; but unless this be done, the spacing of the teeth can only be effected by the laborious process of stepping off the perimeter into such small subdivisions that the chords may be regarded as equal to the arcs, which after all is but an approximation; unless, indeed, we adopt the mechanical expedient of cutting out the ellipse in metal or other substance, measuring and subdividing it with a strip of paper or a steel tape, and wrapping back the divided measure in order to find the points of division on the curve.

"But these circular arcs may be rectified and subdivided with

great facility and accuracy by a very simple process, which we take from Prof. Rankine's "Machinery and Mill Work," and is illustrated in Fig. 195. Let O B be tangent at O to the arc O D, of which C is the centre. Draw the chord D O, bisect it in E, and produce it to A, making O A = O E; with centre A and radius A D describe an arc cutting the tangent in B; then O B will be very nearly equal in length to the arc O D, which, however, should not exceed about 60°; if it be 60°, the error is theoretically about

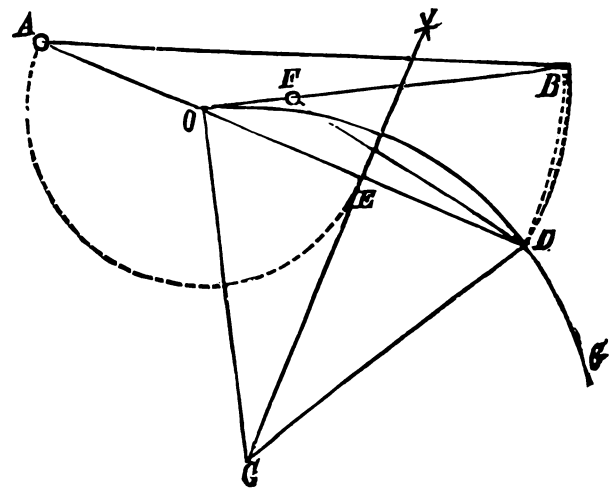

Fig. 195.

$\frac{1}{900}$ of the length of the arc, O B being so much too short; but this error varies with the fourth power of the angle subtended by the arc, so that for 30° it is reduced to $\frac{1}{16}$ of that amount, that is, to $\frac{1}{14400}$. Conversely, let O B be a tangent of given length; make O F = $\frac{1}{4}$ O B; then with centre F and radius F B describe an arc cutting the circle O D G (tangent to O B at O) in the point D; then O D will be approximately equal to O B, the error being the same as in the other construction and following the same law.

"The extreme simplicity of these two constructions and the facility with which they may be made with ordinary drawing instruments make them exceedingly convenient, and they should be more widely known than they are. Their application to the present problem is shown in Fig. 196, which represents a quadrant of an ellipse, the approximate arcs C D, D E, E F, F A having been determined by trial and error. In order to space this off, for the positions of the teeth, a tangent is drawn at D, upon which is constructed the rectification of D C, which is D G, and also that of D E in the opposite direction, that is, D H, by the process just explained. Then, drawing the tangent at F, we set off in the same manner F I = F E, and F K = F A, and then measuring H L = I K, we have finally G L, equal to the whole quadrant of the ellipse.

"Let it now be required to lay out 24 teeth upon this ellipse; that is, 6 in each quadrant; and for symmetry's sake we will suppose that the centre of one tooth is to be at A, and that of another at C, Fig. 196. We therefore divide L G into six equal parts at the points 1, 2, 3, &c., which will be the centres of the teeth upon the rectified ellipse. It is practically necessary to make the spaces a little greater than the teeth; but if the greatest attainable exactness in the operation of the wheel is aimed at, it is important to observe that backlash, in elliptical gearing, has an effect quite different from that resulting in the case of circular wheels. When the pitch-curves are circles, they are always in contact; and we may, if we choose, make the tooth only half the breadth of the space, so long as its outline is correct. When the motion of the driver is reversed, the follower will stand still until the backlash is taken up, when the motion will go on with a perfectly constant velocity ratio as before. But in the case of two elliptical wheels, if the follower stand still while the driver moves, which must happen when the motion is reversed if backlash exists, the pitch-curves are thrown out of contact, and, although the continuity of the motion will not be interrupted, the velocity ratio will be affected. If the motion is never to be reversed, the perfect law of the velocity ratio due to the elliptical pitch-curve may be preserved by reducing the thickness of the tooth, not equally on each side, as is done in circular wheels, but wholly on the side not in action. But if the machine must be capable of acting indifferently in both directions, the reduction must be made on both sides of the tooth: evidently the action will be slightly impaired, for which reason the backlash should be reduced to a minimum. Precisely what *is* the minimum is not so easy to say, as it evidently depends much upon the excellence of the tools and the skill of the workmen. In many treatises on constructive mechanism it is variously stated that the backlash should be from one-fifteenth to one-eleventh of the pitch, which would seem to be an ample allowance in reasonably good castings not intended to be finished, and quite excessive if the teeth are to be cut; nor is it very obvious that its amount should depend upon the pitch any more than upon the precession of the equinoxes. On paper, at any rate, we may reduce it to zero, and make the teeth and spaces equal in breadth, as shown in the figure, the teeth being indicated by the double lines. Those upon the portion L H are then laid off upon K I, after which these divisions are transferred to curves. And since under that condition the motion of this third line, relatively to each of the others, is the same as though it rolled along each of them separately while they remained fixed, the process of constructing the generated curves becomes comparatively simple. For the describing line, we naturally select a circle, which, in order to fulfil the condition, must be small enough to roll within the pitch ellipse; its diameter is determined by the consideration, that if it be equal to A P, the radius of the arc A F, the flanks of the teeth in that region will be radial. We have, therefore, chosen a circle whose diameter, A B, is three-fourths of A P, as shown, so that the teeth, even at the ends of the wheels, will be broader at the base than on the pitch line. This circle ought strictly to roll upon the true elliptical curve, and assuming as usual the

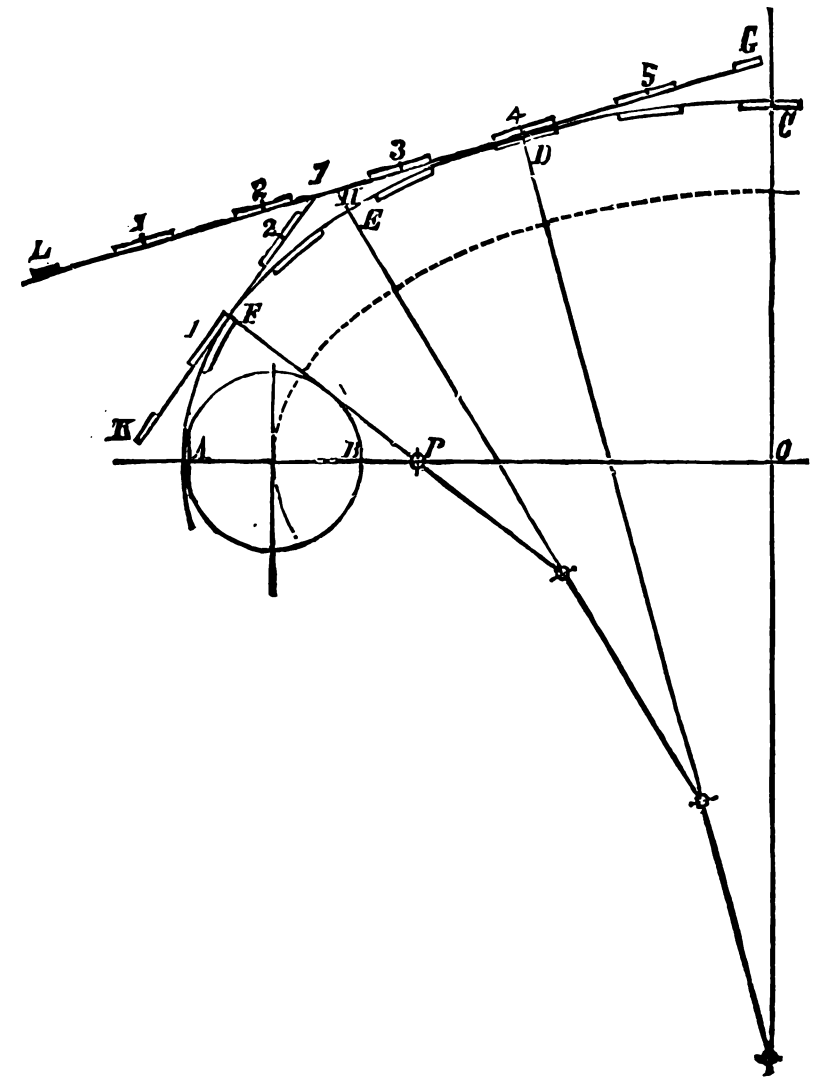

Fig. 196.

tracing-point upon the circumference, the generated curves would vary slightly from true epicycloids, and no two of those used in the same quadrant of the ellipse would be exactly alike. Were it possible to divide the ellipse accurately, there would be no difficulty in laying out these curves; but having substituted the circular arcs, we must now roll the generating circle upon these as bases, thus forming true epicycloidal teeth, of which those lying upon the same approximating arc will be exactly alike.

Should the junction of two of these arcs fall within the breadth of a tooth, as at D, evidently both the face and the flank on one side of that tooth will be different from those on the other side; should the junction coincide with the edge of a tooth, which is very nearly the case at F, then the face on that side will be the epicycloid belonging to one of the arcs, its flank a hypocycloid belonging to the other; and it is possible that either the face or the flank on one side should be generated by the rolling of the describing circle partly on one arc, partly on the one adjacent,

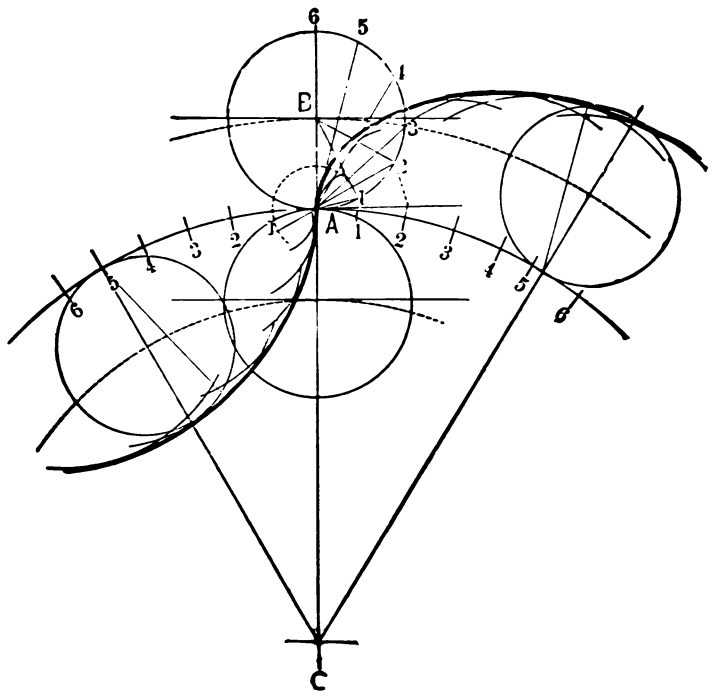

Fig. 197.

which, upon a large scale and where the best results are aimed at, may make a sensible change in the form of the curve.

"The convenience of the constructions given in Fig. 194 is nowhere more apparent than in the drawing of the epicycloids, when, as in the case in hand, the base and generating circles may be of incommensurable diameters; for which reason we have, in Fig. 197, shown its application in connection with the most rapid and accurate mode yet known of describing those curves. Let C be the centre of the base circle; B that of the rolling one; A the point of contact. Divide the semi-circumference of B into six equal parts at 1, 2, 3, &c.; draw the common tangent at A, upon which rectify the arc A2 by process No. 1, then by process No. 2 set out an equal arc A2 on the base circle, and stepping it off three times to the right and left, bisect these spaces, thus making subdivisions on the base circle equal in length to those on the rolling one. Take in succession as radii the chords A1, A2, A3, &c., of the describing circle, and with centres 1, 2, 3, &c., on the base circle, strike arcs either externally or internally, as shown respectively on the right and left; the curve tangent to the external arcs is the epicycloid, that tangent to the internal ones the hypocycloid, forming the face and flank of a tooth for the base circle.

"In the diagram, Fig. 196, we have shown a part of an ellipse whose length is 10 inches and breadth 6, the figure being half size. In order to give an idea of the actual appearance of the combination when complete, we show in Fig. 198 the pair in gear, on a scale of 3 inches to the foot. The excessive eccentricity was selected merely for the purpose of illustration. Fig. 198 will serve also to call attention to another serious circumstance, which is that although the ellipses are alike, the wheels are not; nor can they be made so if there be an even number of teeth, for the obvious reason that a tooth upon one wheel must fit into a space on the other; and since in the first wheel, Fig. 196, we chose to place a tooth at the extremity of each axis, we must in the second one place there a space instead; because at one time the major axes must coincide, at another the minor axis, as in Fig. 191. If then we use even numbers, the distribution and even the forms of the teeth are not the same in the two wheels of the pair. But this complication may be avoided by using an odd number of teeth, since, placing a tooth at one extremity of the major axis, a space will come at the other.

It is not, however, always necessary to cut teeth all round these wheels, as will be seen by an examination of Fig. 199, C and D being the fixed centres of the two ellipses in contact at P. Now P must be on the line C D, whence, considering the free foci, we see P B is equal to P C, and P A to P D; and the common tangent at P makes equal angles with C P and P A, as is also with P B and P D; therefore, C D being a straight line, A B is also a straight line and equal to C D. If then the wheels be overhung, that is, fixed on the ends of the shafts outside the bearings, leaving the outer faces free, the moving foci may be connected by a rigid link A B, as shown.

"This link will then communicate the same motion that would result from the use of the complete elliptical wheels, and we may therefore dispense with most of the teeth, retaining only those near the extremities of the major axes which are necessary in order to assist and control the motion of the link at and near the dead-points. The arc of the pitch-curves through which the teeth must extend will vary with their eccentricity: but in many cases it would not be greater than that which in the approximation may be struck about one centre, so that, in fact, it would not be necessary to go through the process of rectifying and subdividing the quarter of the ellipse at all, as in this case it can make no possible difference whether the spacing adopted for the teeth to be cut would "come out even" or not if carried around the curve. By this expedient, then, we may save not only the trouble of drawing, but a great deal of labor in making, the teeth round the whole ellipse. We might even omit the intermediate portions of the pitch ellipses themselves; but as they move in rolling contact their retention can do no harm, and in one part of the movement will be beneficial, as they will do part of the work; for if, when turning, as shown by the arrows, we consider the wheel whose axis is D as the driver, it will be noted that its radius of contact, C P, is on the increase; and so long as this is the case the other

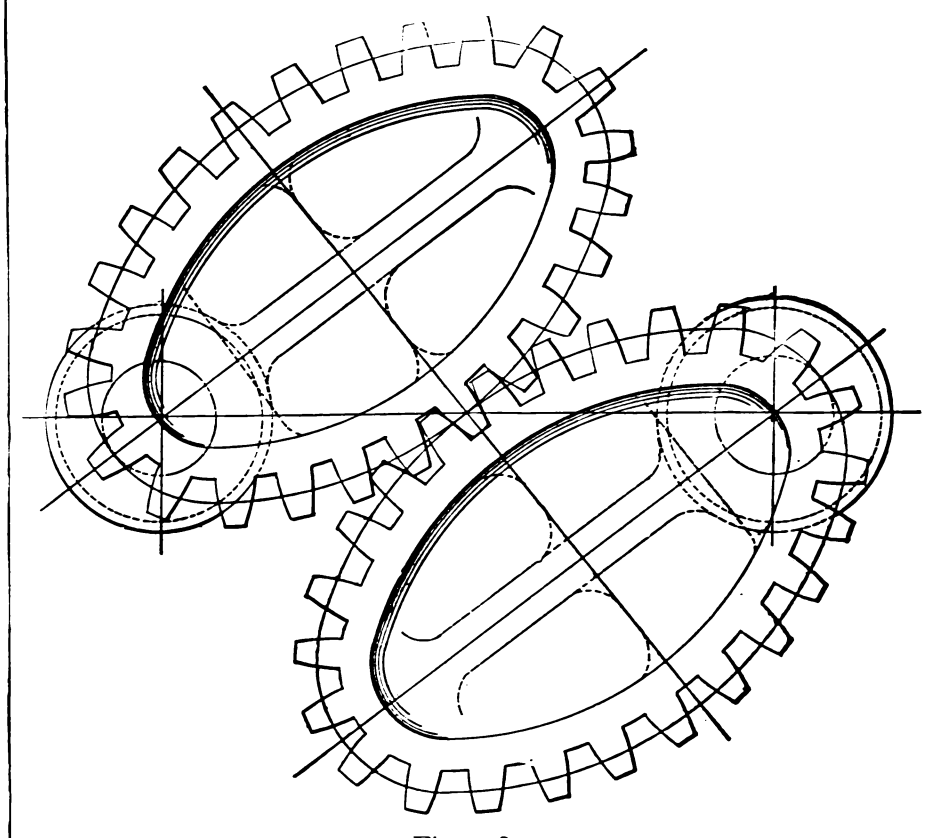

Fig. 198.

wheel will be compelled to move by contact of the pitch lines, although the link be omitted. And even if teeth be cut all round the wheels, this link is a comparatively inexpensive and a useful addition to the combination, especially if the eccentricity be considerable. Of course the wheels shown in Fig. 198 might also have been made alike, by placing a tooth at one end of the major axis and a space at the other, as above suggested. In regard to the variation in the velocity ratio, it will be seen, by reference to Fig. 199, that if D be the axis of the driver, the follower will in the position there shown move faster, the ratio of the angular velocities being $\frac{PD}{PB}$; if the driver turn uniformly the velocity of

the follower will diminish, until at the end of half a revolution, the velocity ratio will be $\frac{PB}{PD}$; in the other half of the revolution these changes will occur in a reverse order. But P D = L B; if then the centres B D are given in position, we know L P, the major axis; and in order to produce any assumed maximum or minimum velocity ratio, we have only to divide L P into segments whose ratio is equal to that assumed value, which will give the foci of the ellipse, whence the minor axis may be found and the curve described. For instance, in Fig. 198 the velocity ratio being nine to one at the maximum, the major axis is divided into two parts, of which one is nine times as long as the other; in Fig. 199 the ratio is as one to three, so that, the major axis being divided into four parts, the distance A C between the foci is equal to two of them, and the distance of either focus from the nearer extremity of the major axis equal to one, and from the more remote extremity equal to three of these parts."

Another example of obtaining a variable motion is given in Fig. 200, The only condition necessary to the construction of

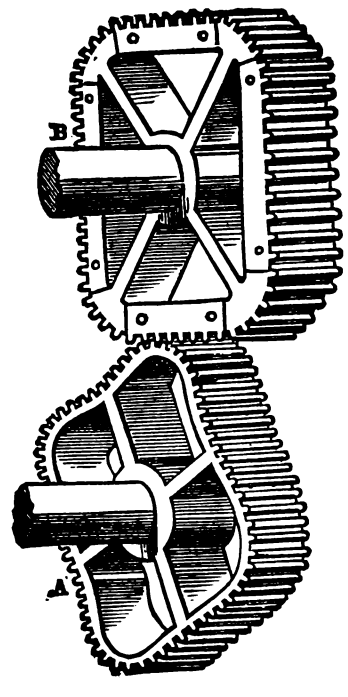

Fig. 200.

wheels of this class is that the sum of the radii of the pitch circles on the line of centres shall equal the distance between the axes of the two wheels. The pitch curves are to be considered the same as pitch circles, "so that," says Willis, "if any given circle or curve be assumed as a describing (or generating) curve, and if it be made to roll on the inside of one of these pitch curves and on the outside of the corresponding portion of the other pitch curve, then the motion communicated by the pressure and sliding contact of one of the curved teeth so traced upon the other will be exactly the same as that effected by the rolling contact (by friction) of the original pitch curves."

It is obvious that on B the corner sections are formed of simple segments of a circle of which the centre is the axis of the shaft, and that the sections between them are simply racks. The corners of A are segments of a circle of which the axis of A is the centre, and the sections between the corners curves meeting the

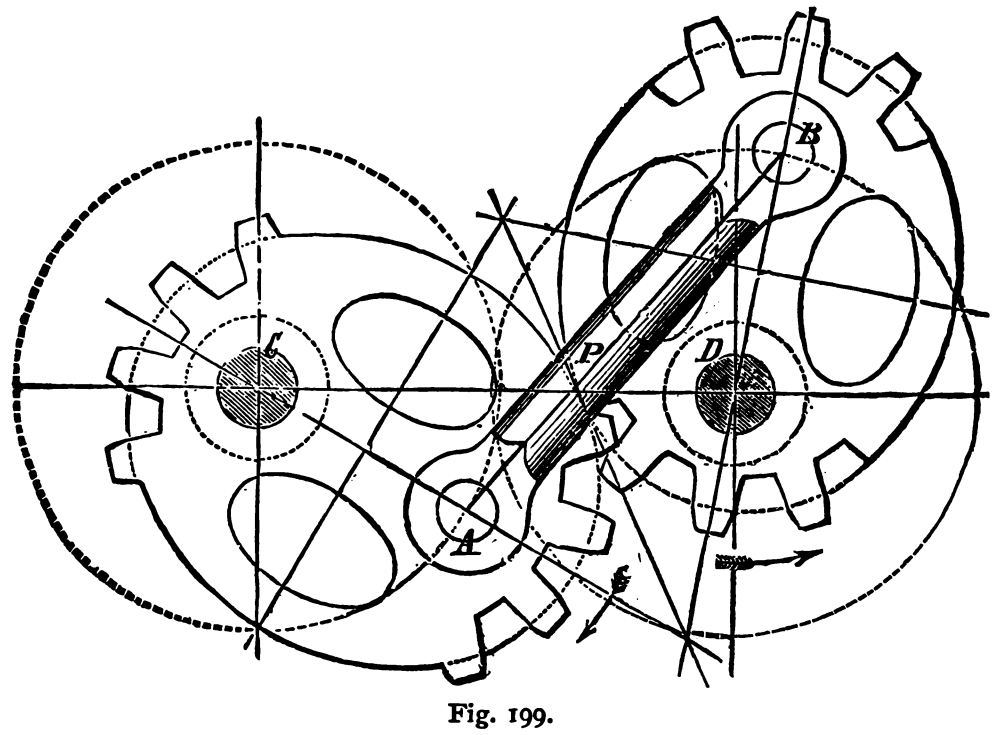

Fig. 199.

pitch circles of the rack at every point as it passes the line of centres.

Intermittent motion may also be obtained by means of a worm-wheel constructed as in Fig. 201, the worm having its teeth at a right angle to its axis for a distance around the circumference proportioned to the required duration of the period of rest; or the motion may be made variable by giving the worm teeth different degrees of inclination (to the axis), on different portions of the circumference.

In addition to the simple operation of two or more wheels transmitting motion by rotating about their fixed centres and in fixed positions, the following examples of wheel motion may be given.

In Fig. 202 are two gear-wheels, A, which is fast upon its stationary shaft, and B, which is free to rotate upon its shaft, the

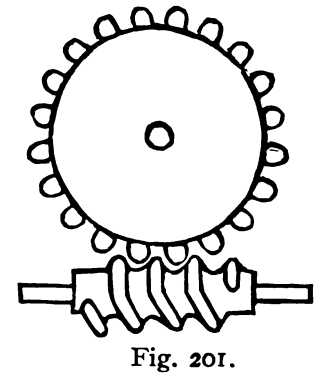

Fig. 201.

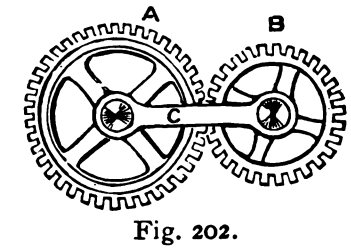

Fig. 202.

link C affording journal bearing to the two shafts. Suppose that A has 40 teeth, while B has 20 teeth, and that the link C is rotated once around the axis of A, how many revolutions will B make? By reason of there being twice as many teeth in A as in B the latter will make two rotations, and in addition to this it will, by reason of its connection to the arm C, also make a revolution, these being two distinct motions, one a rotation of B about the axis of A, and the other two rotations of B upon its own axis.

A simple arrangement of gearing for reversing the direction of rotation of a shaft is shown in Fig. 203. I and F are fast and loose pulleys for the shaft D, A and C are gears free to rotate upon D, N is a clutch driven by D; hence if N be moved so as to engage with C the latter will act as a driver to rotate the shaft B, the

wheel upon B rotating A in an opposite direction to the rotation of D. But if N be moved to engage with A the latter becomes the driving wheel, and B will be caused to rotate in the opposite direction. Since, however, the engagement of the clutch N with the clutch on the nut of the gear-wheels is accompanied with a violent shock and with noise, a preferable arrangement is shown in Fig. 204, in which the gears are all fast to their shafts, and the driving shaft for C passes through the core or bore of that for

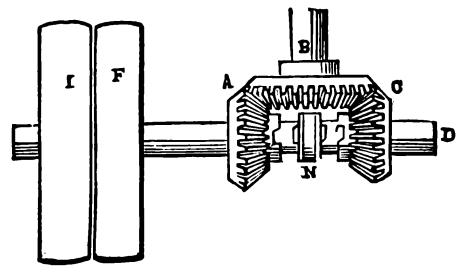

Fig. 203.

A, which is a sleeve, so that when the driving belt acts upon pulley F the shaft B rotates in one direction, while when the belt acts upon E, B rotates in the opposite direction, I being a loose pulley.

If the speed of rotation of B require to be greater in one direction than in the other, then the bevel-wheel on B is made a double one, that is to say, it has two annular toothed surfaces on its radial face, one of larger diameter than the other; A gearing

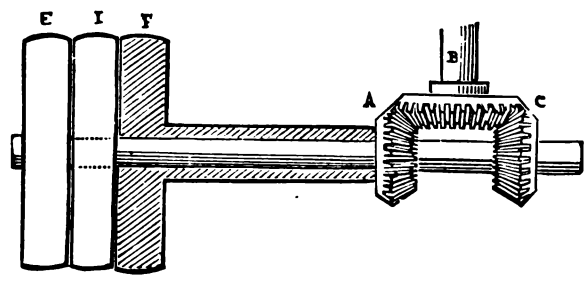

Fig. 204.

with one of these toothed surfaces, and C with the other. It is obvious that the pinions A C, being of equal diameters, that gearing with the surface or gear of largest diameter will give to B the slowest speed of rotation.

Fig. 205 represents Watt's sun-and-planet motion for converting reciprocating into rotary motion; B D is the working beam of the engine, whose centre of motion is at D. The gear A is so connected to the connecting rod that it cannot rotate, and is kept in gear with the wheel C on the fly-wheel shaft by means of

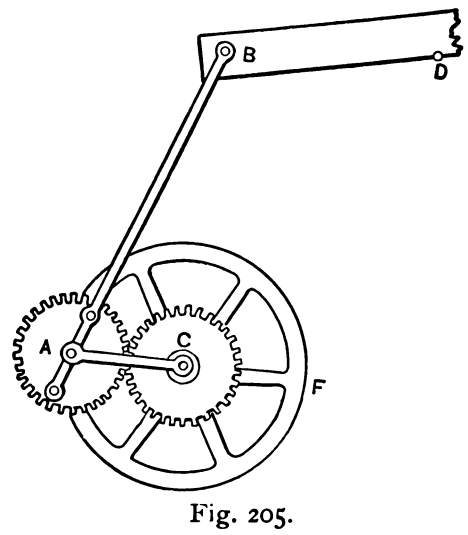

Fig. 205.

the link shown. The wheel A being prevented from rotation on its axis causes rotary motion to the wheel C, which makes two revolutions for one orbit of A.

An arrangement for the rapid increase of motion by means of gears is shown in Fig. 206, in which A is a stationary gear, B is free to rotate upon its shaft, and being pivoted upon the shaft of A, at D, is capable of rotation around A while remaining in gear with C Suppose now that the wheel A were absent, then if B were rotated around C with D as a centre of motion, C and its shaft E would make a revolution even though B would have no rotation upon its axis. But A will cause B to rotate upon its axis and thus communicate a second degree of motion to C, with the result that one revolution of B causes two rotations of C.

The relation of motion between B and C is in this case constant (2 to 1), but this relation may be made variable by a construction such as shown in Fig. 207, in which the wheel B is carried in a gear-wheel H, which rides upon the shaft D. Suppose now that H remains stationary while A revolves, then motion will be transmitted through B to C, and this motion will be constant and in proportion to the relative diameters of A and C. But suppose by means of an independent pinion the wheel H be rotated upon its axis, then increased motion will be imparted to

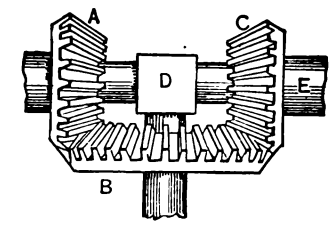

Fig. 206.

C, and the amount of the increase will be determined by the speed of rotation of H, which may be made variable by means of cone pulleys or other suitable mechanical devices.

Fig. 208 represents an arrangement of gearing used upon steam fire-engines and traction engines to enable them to turn easily in a short radius, as in turning corners in narrow streets. The object is to enable the driving wheel on either side of the engine to increase or diminish its rotation to suit the conditions caused by the leading or front pair of steering wheels.

In the figures A is a plate wheel having the lugs L, by means of which it may be rotated by a chain. A is a working fit on the shaft S, and carries three pinions E pivoted upon their axes P. F is a bevel-gear, a working fit on S, while C is a similar gear fast

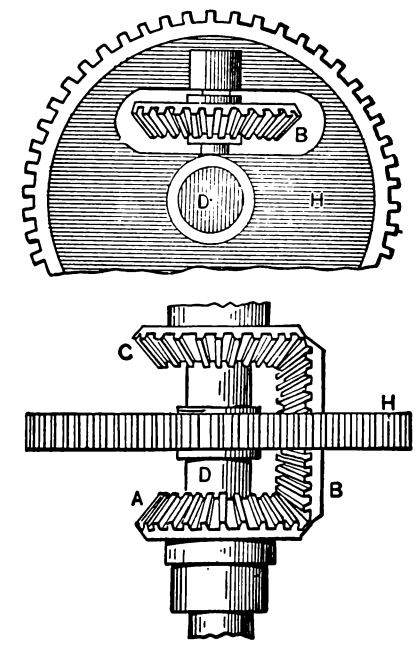

Fig. 207.

to S. The pinions B, D are to drive gears on the wheels of the engine, the wheels being a working fit on the axle. Let it now be noted that if S be rotated, C and F will rotate in opposite directions and A will remain stationary. But if A be rotated, then all the gears will rotate with it, but E will not rotate upon P unless there be an unequal resistance to the motion of pinions D and B. So soon, however, as there exists an inequality of resistance between D and B then pinions E operate. For example, let B have more resistance than D, and B will rotate more slowly, causing pinion E to rotate and move C faster than is due to the motion of the chain wheel A, thus causing the wheel on one side of the engine to retard and the other to increase its motion, and thus enable the engine to turn easily. From its action this arrangement is termed the equalizing gear.

In Figs. 209 to 214 are shown what are known as mangle-wheels from their having been first used in clothes mangling machines.

The mangle-wheel* in its simplest form is a revolving disc of metal with a centre of motion C (Fig. 209). Upon the face of the disc is fixed a projecting annulus *a m*, the outer and inner edges of which are cut into teeth. This annulus is interrupted at *f*, and the teeth are continued round the edges of the interrupted portion so as to form a continued series passing from the outer to the inner edge and back again.

A pinion B, whose teeth are of the same pitch as those of the wheel, is fixed to the end of an axis, and this axis is mounted so as to allow of a short travelling motion in the direction B C. This may be effected by supporting this end of it either in a swing-frame moving upon a centre as at D, or in a sliding piece, according to the nature of the train with which it is connected. A short pivot projects from the centre of the pinion, and this rests in and is guided by a groove B S *f t b h* K, which is cut in the

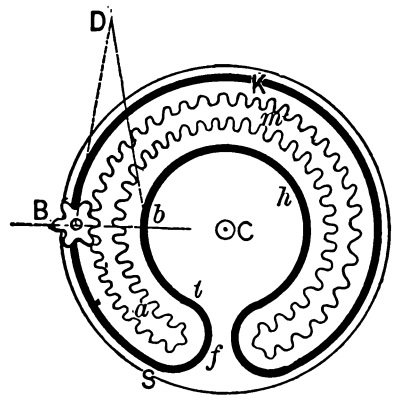

Fig. 209.

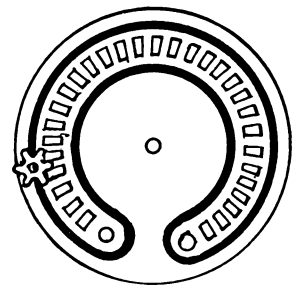

Fig. 210.

surface of the disc, and made concentric to the pitch circles of the inner and outer rays of teeth, and at a normal distance from them equal to the pitch radius of the pinion.

Now when the pinion revolves it will, if it be on the outside, as in Fig. 209, act upon the spur teeth and turn the wheel in the opposite direction to its own, but when the interrupted portion *f* of the teeth is thus brought to the pinion the groove will guide the pinion while it passes from the outside to the inside, and thus bring its teeth into action with the annular or internal teeth. The wheel will then receive motion in the same direction as that of the pinion, and this will continue until the gap *f* is again brought to the pinion, when the latter will be carried outwards and the motion again be reversed. The *velocity ratio* in either direction will remain constant, but the ratio when the pinion is inside will differ slightly from the ratio when it is outside, because the pitch radius of the annular or internal teeth is necessarily somewhat less than that of the spur teeth. However, the change of direction is not instantaneous, for the form of the groove S *f t*, which connects the inner and outer grooves, is a semicircle, and when the axis of the pinion reaches S the velocity of the mangle-wheel begins to diminish gradually until it is brought to rest at *f*, and is again gradually set in motion from *f* to *t*, when the constant ratio begins; and this retardation will be increased by increasing the difference between the radius of the inner and outer pitch circles.

* From Willis's "Principles of Mechanism."

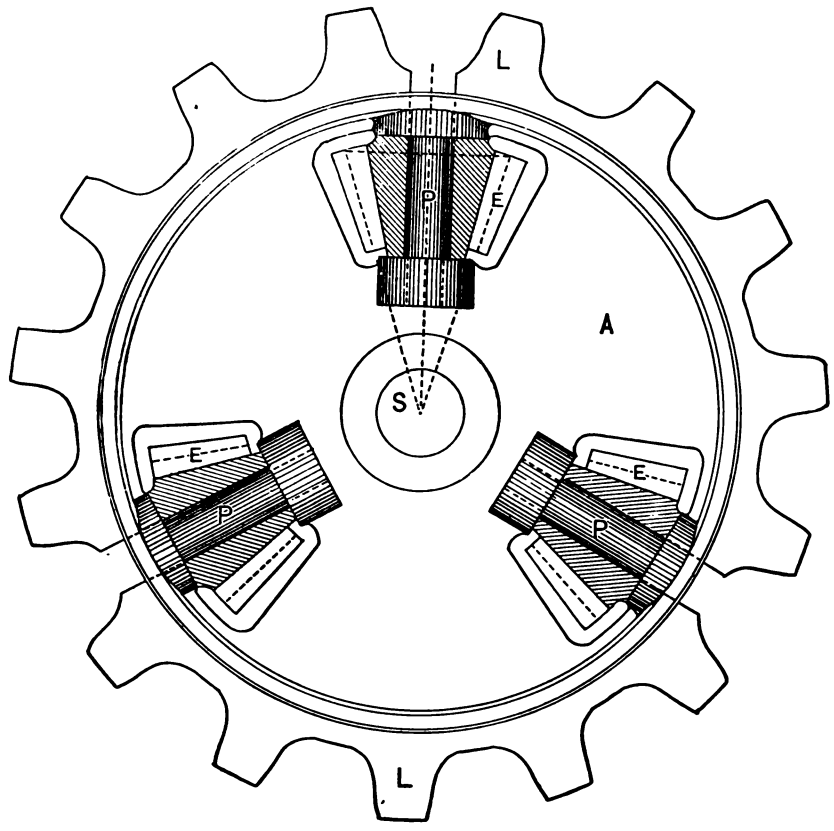

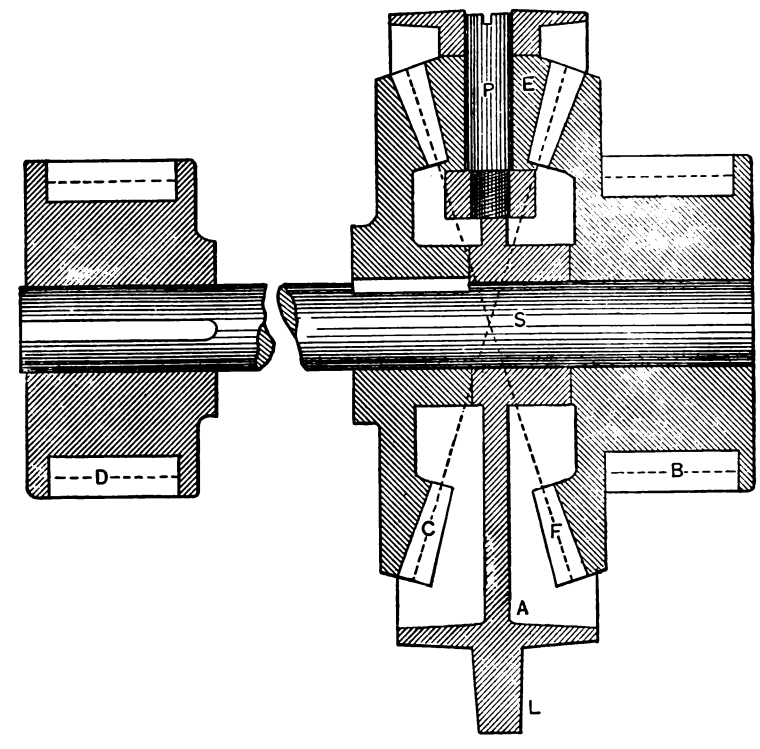

Fig. 208.

The teeth of a mangle-wheel are, however, most commonly formed by pins projecting from the face of the disc as in Fig. 210. In this manner the pitch circles for the inner and outer wheels coincide, and therefore the velocity ratio is the same within and without, also the space through which the pinion moves in shifting is reduced.

This space may be still further reduced by arranging the teeth as in Fig. 211, that is, by placing the spur-wheel within the annular or internal one; but at the same time the difference of the two velocity ratios is increased.

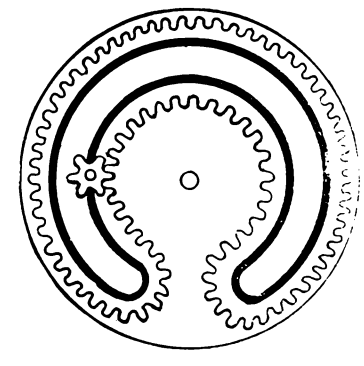

Fig. 211.

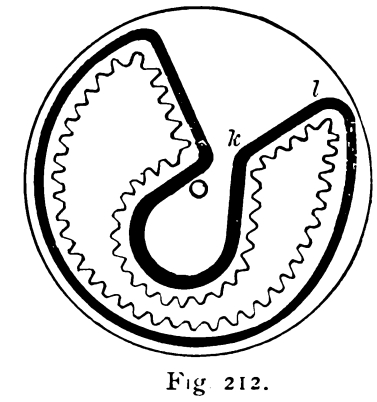

Fig 212.

If it be required that the velocity ratio vary, then the pitch lines of the mangle-wheel must no longer be concentric.

Thus in Fig. 212 the groove *k l* is directed to the centre of the mangle-wheel, and therefore the pinion will proceed during this portion of its path without giving any motion to the wheel, and in the other lines of teeth the pitch radius varies, hence the angular velocity ratio will vary.

In Figs. 209, 210, and 211 the curves of the teeth are readily obtained by employing the same describing circle for the whole of

them. But when the form Fig. 212 is adopted, the shape of the teeth requires some consideration.

Every tooth of such a mangle-wheel may be considered as formed of two ordinary teeth set back to back, the pitch line passing through the middle. The outer half, therefore, appropriated to the action of the pinion on the outside of the wheel, resembles that portion of an ordinary spur-wheel tooth that lies beyond its pitch line, and the inner half which receives the inside action of the pinion resembles the half of an annular wheel that lies within the pitch circle. But the consequence of this arrangement is, that in both positions the action of the driving teeth must be confined to the approach of its teeth to the line of centres, and consequently these teeth must be wholly within their pitch line.

To obtain the forms of the teeth, therefore, take any convenient describing circle, and employ it to describe the teeth of the pinion by rolling within its pitch circle, and to describe the teeth of the wheel by rolling within and without its pitch circle, and the pinion will then work truly with the teeth of the wheel in both positions. The tooth at each extremity of the series must be a circular

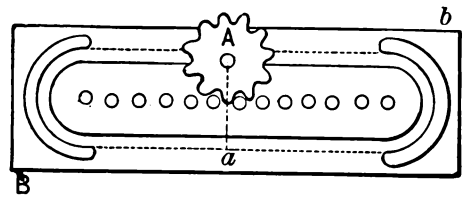

Fig. 213.

one, whose centre lies on the pitch line and whose diameter is equal to half the pitch.

If the reciprocating piece move in a straight line, as it very often does, then the mangle-*wheel* is transformed into a *mangle-rack* (Fig. 213) and its teeth may be simply made cylindrical pins, which those of the mangle-wheel do not admit of on correct principle. B *b* is the sliding piece, and A the driving pinion, whose axis must have the power of shifting from A to *a* through a space equal to its own diameter, to allow of the change from one side of the rack to the other at each extremity of the motion. The teeth of the mangle-rack may receive any of the forms which are given to common rack-teeth, if the arrangement be derived from either Fig. 210 or Fig. 211.

But the mangle-rack admits of an arrangement by which the shifting motion of the driving pinion, which is often inconvenient, may be dispensed with.

B *b*, Fig. 214, is the piece which receives the reciprocating motion, and which may be either guided between rollers, as

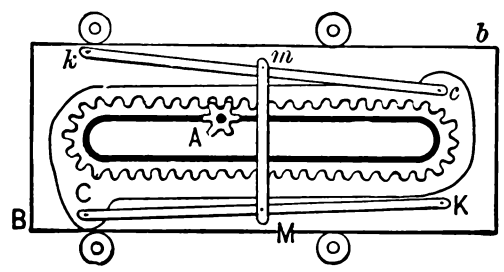

Fig. 214.

shown, or in any other usual way; A the driving pinion, whose axis of motion is fixed; the mangle rack C *c* is formed upon a separate plate, and in this example has the teeth upon the inside of the projecting ridge which borders it, and the guide-groove formed within the ring of teeth, similar to Fig. 211.

This rack is connected with the piece B *b* in such a manner as to allow of a short transverse motion with respect to that piece, by which the pinion, when it arrives at either end of the course, is enabled by shifting the rack to follow the course of the guide-groove, and thus to reverse the motion by acting upon the opposite row of teeth.

The best mode of connecting the rack and its sliding piece is that represented in the figure, and is the same which is adopted in the well-known cylinder printing-engines of Mr. Cowper. Two guide-rods K C, *k c* are jointed at one end K *k* to the reciprocating piece B *b*, and at the other end C *c* to the shifting-rack; these rods are moreover connected by a rod M *m* which is jointed to each midway between their extremities, so that the angular motion of these guide-rods round their centres K *k* will be the same; and as the angular motion is small and the rods nearly parallel to the path of the slide, their extremities C *c* may be supposed to move at a right angle to that path, and consequently the rack which is jointed to those extremities will also move upon B *b* in a direction at a right angle to its path, which is the thing required, and admits of no other motion with respect to B *b*.

To multiply plane motion the construction shown in Fig. 215 is frequently employed. A and B are two racks, and C is a wheel

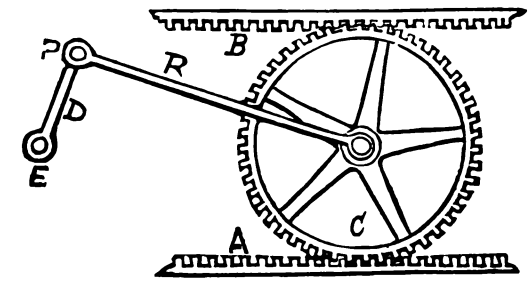

Fig. 215.

between them pivoted upon the rod R. A crank shaft or lever D is pivoted at E and also (at P) to R. If D be operated C traverses along A and also rotates upon its axis, thus giving to B a velocity equal to twice that of the lateral motion of C.

The diameter of the wheel is immaterial, for the motion of B will always be twice that of C.

Friction gearing-wheels which communicate motion one to the other by simple contact of their surfaces are termed friction-wheels, or friction-gearing. Thus in Fig. 216 let A and B be two wheels that touch each other at C, each being suspended upon a central shaft; then if either be made to revolve, it will cause the other to revolve also, by the friction of the surfaces meeting at C. The degree of force which will be thus conveyed from one to the other will depend upon the character of the surface and the length of the line of contact at C.

These surfaces should be made as concentric to the axis of the wheel and as flat and smooth as possible in order to obtain a maximum power of transmission. Mr. E. S. Wicklin states that under these conditions and proper forms of construction as much as 300 horse-power may be (and is in some of the Western States) transmitted.

In practice, small wheels of this class are often covered with some softer material, as leather; sometimes one wheel only is so covered, and it is preferred that the covered wheel drive the iron one, because, if a slip takes place and the iron wheel was the driver, it would be apt to wear a concave spot in the wood

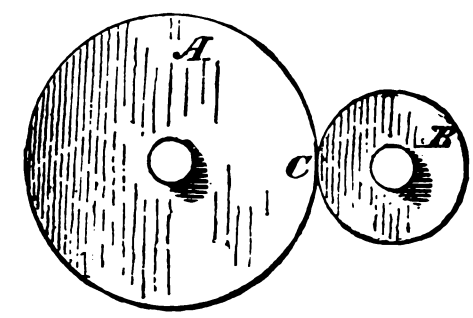

Fig. 216.

covered one, and the friction between the two would be so greatly diminished that there would be difficulty in starting them when the damaged spot was on the line of centre.

If, however, the iron wheel ceased motion, the wooden one continuing to revolve, the damage would be spread over that part of the circumference of the wooden one which continued while the iron one was at rest, and if this occurred throughout a whole revolution of the wooden wheel its roundness would not be apt to be impaired, except in so far as differences in the hardness of the wood and similar causes might effect.

"To select the best material for driving pulleys in friction-gearing has required considerable experience; nor is it certain

that this object has yet been attained. Few, if any, well-arranged and careful experiments have been made with a view of determining the comparative value of different materials as a frictional medium for driving iron pulleys. The various theories and notions of builders have, however, caused the application to this use of several varieties of wood, and also of leather, india-rubber, and paper; and thus an opportunity has been given to judge of their different degrees of efficiency. The materials most easily obtained, and most used, are the different varieties of wood, and of these several have given good results.

"For driving light machinery, running at high speed, as in sash, door, and blind factories, basswood, the linden of the Southern and Middle States (*Tilia Americana*) has been found to possess good qualities, having considerable durability and being unsurpassed in the smoothness and softness of its movement. Cotton wood (*Populus monilifera*) has been tried for small machinery with results somewhat similar to those of basswood, but is found to be more affected by atmospheric changes. And even white pine makes a driving surface which is, considering the softness of the wood, of astonishing efficiency and durability. But for all heavy work, where from twenty to sixty horse-power is transmitted by a single contact, soft maple (*Acer rubrum*) has, at present, no rival. Driving pulleys of this wood, if correctly proportioned and well built, will run for years with no perceptible wear.

"For very small pulleys, leather is an excellent driver and is very durable; and rubber also possesses great adhesion as a driver; but a surface of soft rubber undoubtedly requires more power than one of a less elastic substance.

"Recently paper has been introduced as a driver for small machinery, and has been applied in some situations where the test was most severe; and the remarkable manner in which it has thus far withstood the severity of these tests appears to point to it as the most efficient material yet tried.

"The proportioning, however, of friction-pulleys to the work required and their substantial and accurate construction are matters of perhaps more importance than the selection of material.

"Friction-wheels must be most accurately and substantially made and kept in perfect line so that the contact between the surfaces may not be diminished. The bodies are usually of iron lagged or covered with wooden segments.

"All large drivers, say from four to ten feet diameter and from twelve to thirty inch face, should have rims of soft maple six or seven inches deep. These should be made up of plank, one and a half or two inches thick, cut into 'cants,' one-sixth, eighth, or tenth of the circle, so as to place the grain of the wood as nearly as practicable in the direction of the circumference. The cants should be closely fitted, and put together with white lead or glue, strongly nailed and bolted. The wooden rim, thus made up to within about three inches of the width required for the finished pulley, is mounted upon one or two heavy iron 'spiders,' with six or eight radial arms. If the pulley is above six feet in diameter, there should be eight arms, and two spiders when the width of face is more than eighteen inches.

"Upon the ends of the arms are flat 'pads,' which should be of just sufficient width to extend across the inner face of the wooden rim, as described; that is, three inches less than the width of the finished pulley. These pads are gained into the inner side of the rim; the gains being cut large enough to admit keys under and beside the pads. When the keys are well driven, strong 'lag' screws are put through the ends of the arm into the rim. This done, an additional 'round' is put upon each side of the rim to cover bolt heads and secure the keys from ever working out. The pulley is now put to its place on the shaft and keyed, the edges trued up, and the face turned off with the utmost exactness.

"For small drivers, the best construction is to make an iron pulley of about eight inches less diameter and three inches less face than the pulley required. Have four lugs, about an inch square, cast across the face of this pulley. Make a wooden rim, four inches deep, with face equal to that of the iron pulley, and the inside diameter equal to the outer diameter of the iron. Drive this rim snugly on over the rim of the iron pulley having cut gains to receive the lugs, together with a hard wood key beside each. Now add a round of cants upon each side, with their inner diameter less than the first, so as to cover the iron rim. If the pulley is designed for heavy work, the wood should be maple, and should be well fastened by lag screws put through the iron rim; but for light work, it may be of basswood or pine, and the lag screws omitted. But in all cases, the wood should be thoroughly seasoned.

"In the early use of friction-gearing, when it was used only as backing gear in saw-mills, and for hoisting in grist-mills, the pulleys were made so as to present the head of the wood to the surface; and we occasionally yet meet with an instance where they are so made. But such pulleys never run so smoothly nor drive

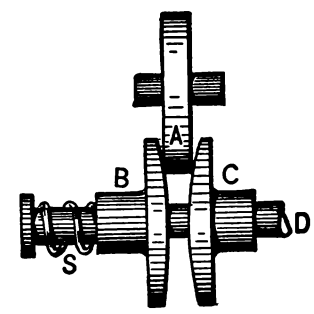

Fig. 217.

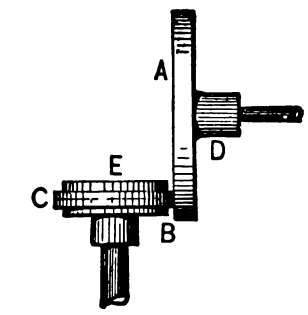

Fig. 218.

so well as those made with the fibre more nearly in a line with the work."*

The driving friction may be obtained from contact of the radial surfaces in two ways: thus, Fig. 217 represents three discs, A, B, and C; the edge of A being gripped by and between B and C, which must be held together by a spiral spring S or other equivalent device. These wheels may be made to give a variable speed of rotation by curving the surfaces of the pair B C as in the figure. By means of suitable lever-motion A may be made to advance towards or recede from the centre of B and C, giving to their shaft an increased or diminished speed of revolution.

A similar result may be obtained by the construction shown in Fig. 218, in which D and E are two discs fast upon their respective shafts, and C are discs of leather clamped in E. It is obvious that if D be the driver the speed of revolution of E will be diminished in proportion as it is moved nearer to the centre of D, and also that the direction of revolution of D remaining constant, that of E will be in one direction if on the side B of the centre of D, and in the other direction if it is on the side A of the centre of D, thus affording means of reversing the motion as well as of varying its speed. A similar arrangement is sometimes employed to enable the direction of rotation of the driver shaft to be reversed, or its motion to cease. Thus, in Fig. 219, R is a driving rope driving the discs A, B, and *c*, *d*, *e*, *f*, *g* are discs of yellow pine clamped between the flanges *h i*; when these five discs are forced (by lifting shaft H), against the face of A motion occurs in one direction, while if forced against B the direction of motion of H is reversed.

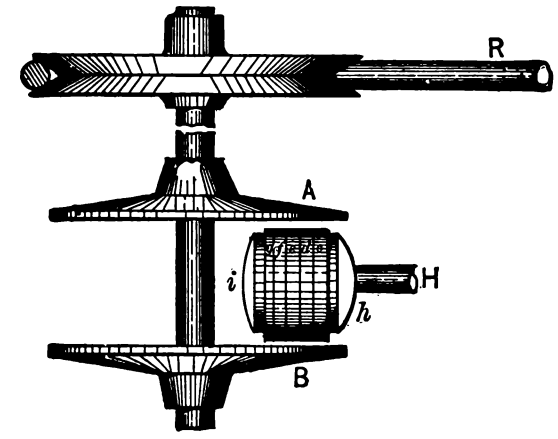

Fig. 219.

For many purposes, such as hoisting, for example, where considerable power requires to be transmitted, the form of friction wheels shown in Fig. 220 is employed, the object being to increase the line of contact between wheels of a given width of

* By E. S. Wicklin.

face. In this case the strain due to the length of the line of contact partly counteracts itself, thus relieving to that extent the journals from friction. Thus in Fig. 221 is shown a single

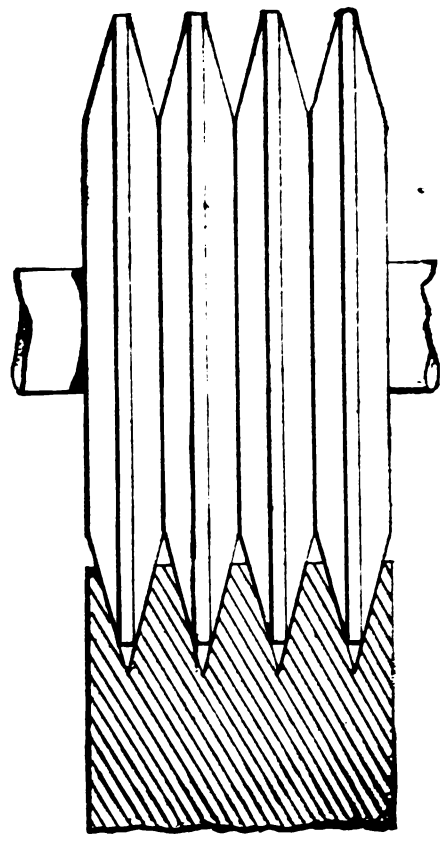

Fig. 220.

wedge and groove of a pair of wheels. The surface pressure on each side will be at a right angle to the face, or in the direction described by the arrows A and B. The surface contact acts to thrust the bearings of the two shafts apart. The effective length of surface acting to thrust the bearings apart being denoted by the dotted line C. The relative efficiency of this class of wheel, however, is not to be measured by the length of the line C, as compared to that of the two contacting sides of the groove, because it is increased from the wedge shape of the groove, and furthermore, no matter how solid the wheels may be, there will be some elasticity which will operate to increase the driving power due to the contact. It is to preserve the wedge principle that the wedges are made flat at the top, so that they shall not bottom in the grooves even after considerable wear has taken place. The object of employing this class of gear is to avoid noise and jar and to insure a uniform motion. The motion at the line of contact of such wheels is not a rolling,

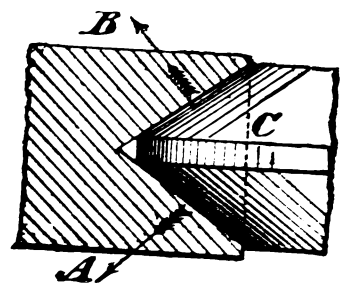

Fig. 221.

but, in part, a sliding one, which may readily be perceived from a consideration of the following. The circumference of the top of each wedge is greater than that of the bottom, and, in the case of the groove, the circumference of the top is greater than that of the bottom; and since the top or largest circumference of one contacts with the smallest circumference of the other, it follows that the difference between the two represents the amount of sliding motion that occurs in each revolution. Suppose, for example, we take two of such wheels 10 inches in diameter, having wedges and grooves $\frac{1}{4}$ inch high and deep respectively; then the top of the groove will travel 31·416 inches in a revolution, and it will contact with the bottom of the wedge which travels (on account of its lesser diameter) 29·845 inches per revolution.

Fig. 222 shows the construction for a pair of bevel wheels on the same principle.

A form of friction-gearing in which the journals are relieved of the strain due to the pressure of contact, and in which slip is

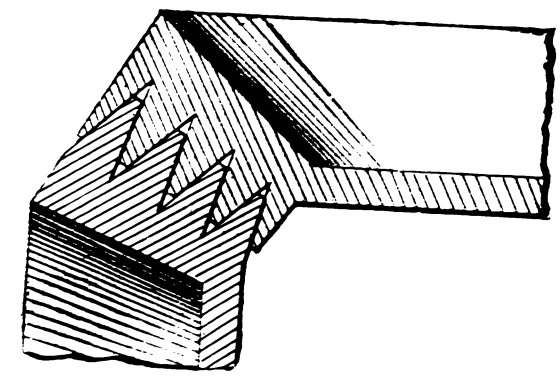

Fig. 222.

impossible, is shown in Fig. 223. It consists of projections on one wheel and corresponding depressions or cavities on the other. These projections and cavities are at opposite angles on each

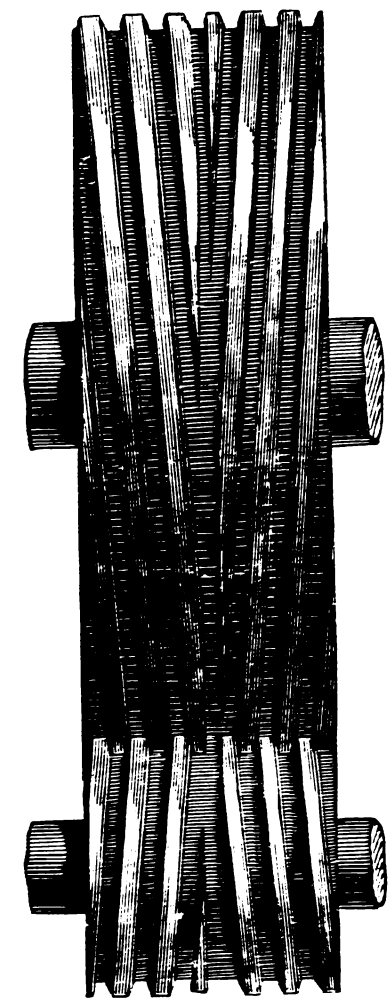

Fig. 223.

half of each wheel, so as to avoid the end pressure on the journals which would otherwise ensue. Their shapes may be formed at will, providing that the tops of the projections are narrower than

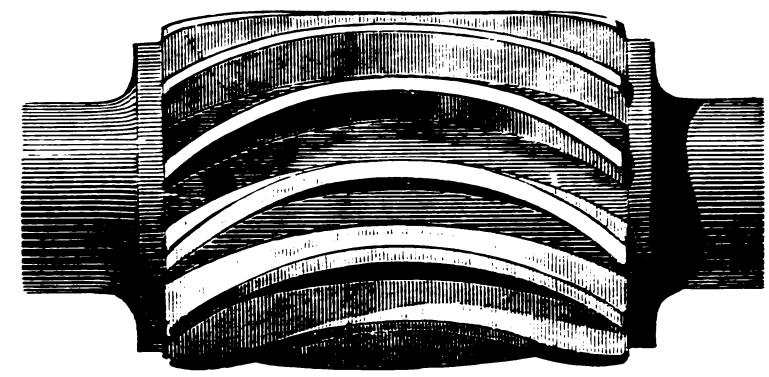

Fig. 224.

their bases, which is necessary to enable the projections to enter and leave the cavities. In this class of positive gear great truth or exactness is possible, because both the projections and cavities may be turned in a lathe. Fig. 224 represents a similar kind of

gear with the projections running lengthways of the cylinder approaching more nearly in its action to toothed gearing, and in this case the curves for the teeth and groves should be formed by the rules already laid down for toothed gearing The action of this latter class may be made very smooth, because a continuous contact on the line of centres may be maintained by reason of the longitudinal curve of the teeth.

Cams may be employed to impart either a uniform, an irregular,

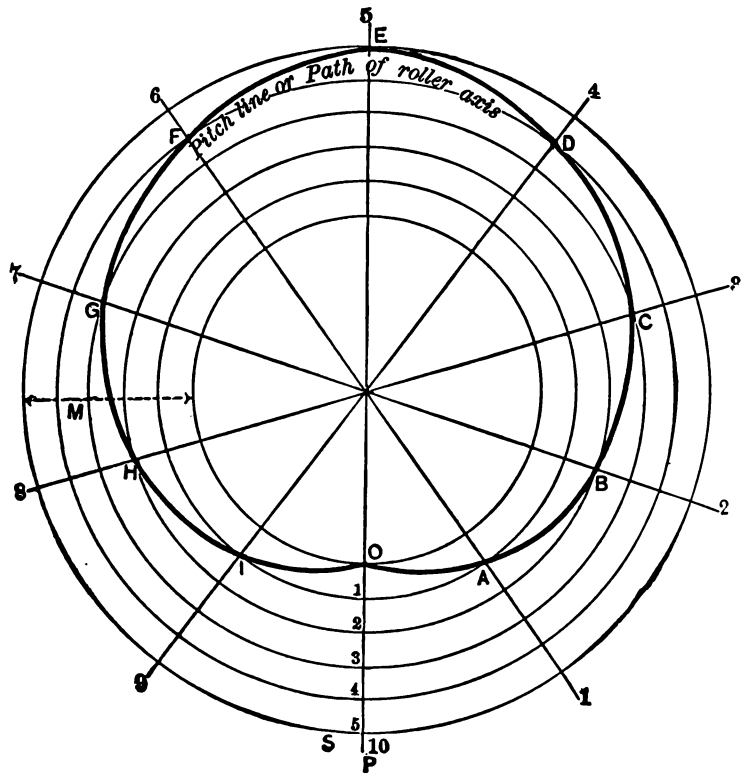

Fig. 225.

or an intermittent motion, the principles involved in their construction being as follows:—Let it be required to construct a cam that being revolved at a uniform velocity shall impart a uniform reciprocating motion. First draw an inner circle O, Fig. 225, whose radius must equal the radius of the shaft that is to drive it, plus the depth of the cam at its shallowest part, plus the radius of the roller the cam is to actuate. Then from the same

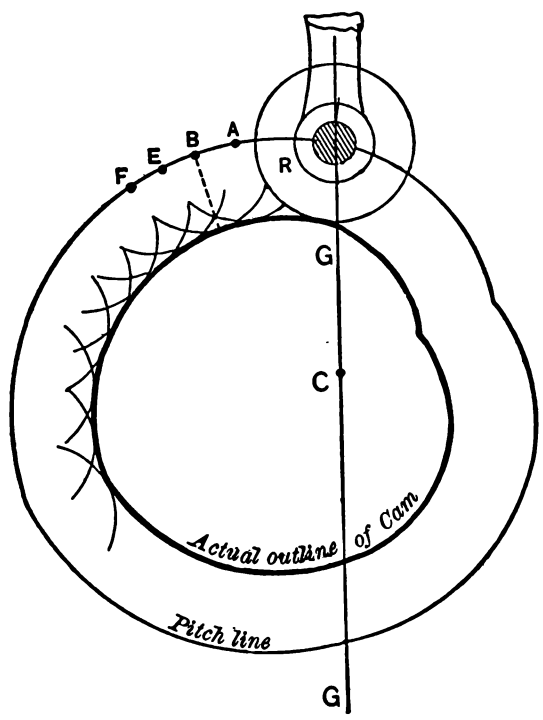

Fig. 226.

centre draw an outer circle S, the radius between these two circles being equal to the amount the cam is to move the roller. Draw a line O P, and divide it into any convenient numbers of divisions (five being shown in the figure), and through these points draw circles. Divide the outer circle S into twice as many equal divisions as the line O P is divided into (as from 1 to 10 in the figure), and where these lines pass through the circles will be points through which the pitch line of the cam may be drawn. Thus where circle 1 meets line 1, or at point A, is one point in the pitch line of the cam; where circle 2 meets line 2, or at B, is another point in the pitch line of the cam, and so on until we reach the point E, where circle 5 meets line 5. From this point we simply repeat the process, the point E where line 6 cuts circle 4, being a point on the pitch line, and so on throughout the whole 10 divisions, and through the points so obtained we draw the pitch line.

If we were to cut out a cam to the outline thus obtained, and revolve it at a uniform velocity, it would move a point held against its perimeter at a uniform velocity throughout the whole of the cam revolution. But such a point would rapidly become

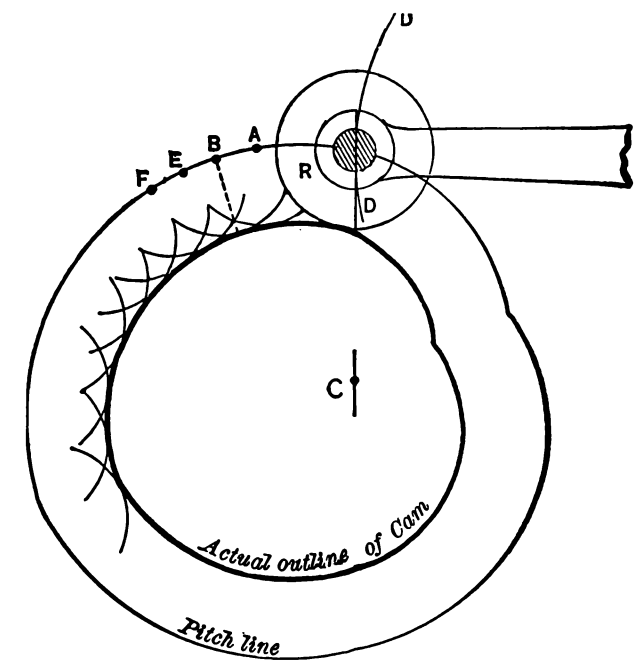

Fig. 227.

worn away and dulled, which would, as the point broadened, vary the motion imparted to it, as will be seen presently. To avoid this wear a roller is used in place of a point, and the diameter of the roller affects the action of the cam, causing it to accelerate the cam action at one and retard it at another part of the cam revolution, hence the pitch line obtained by the process in Fig. 225 represents the path of the centre of the roller, and from this pitch line we may mark out the actual cam by the construction shown in Fig. 226. A pair of compasses are set to the radius of the roller R, and from points (such as at A, B, E, F), as the pitch line, arcs of circles are struck, and a line drawn to just meet the crowns of these arcs will give the outline of the actual cam.

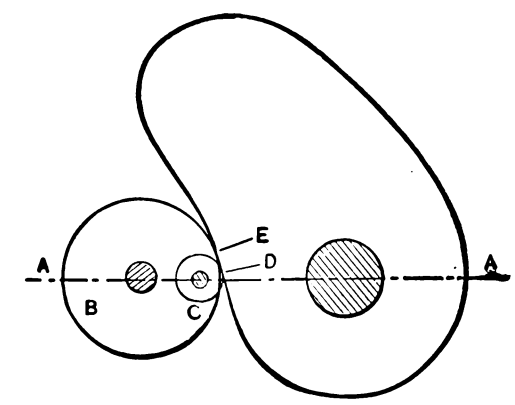

Fig. 228.

The motion of the roller, however, in approaching and receding from the cam centre C, must be in a straight line G G that passes through the centre C of the cam. Suppose, for example, that instead of the roller lifting and falling in the line G G its arm is horizontal, as in Fig. 227, and that this arm being pivoted the roller moves in an arc of a circle as D D, and the motion imparted to the arm will no longer be uniform. Furthermore, different diameters of roller require different forms of cam to accomplish the same motion, or, in other words, with a given cam the action will vary with different diameters of roller. Suppose, for example, that in Fig. 228 we have a cam that is to operate a roller along the line A A, and that B represents a large

and C a small roller, and with the cam in the position shown in the figure, C will have contact with the cam edge at point D, while B will have contact at the point E, and it follows that on account of the enlarged diameter of roller B over roller C, its action is at this point quicker under a given amount of cam

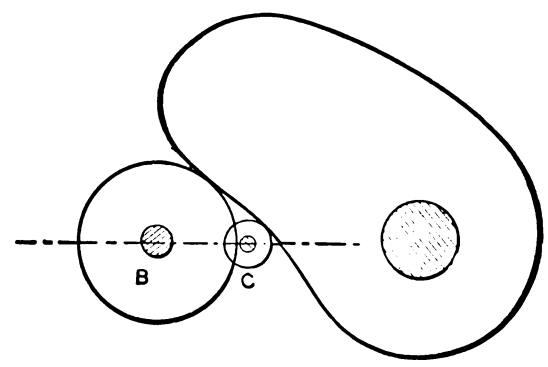

Fig. 229.

motion, which has occurred because the point of contact has advanced upon the roller surface—rolling along it, as it were. In Fig. 229 we find that as the cam moves forward this action continues on both the large and the small roller, its effect being greater upon the large than upon the small one, and as this

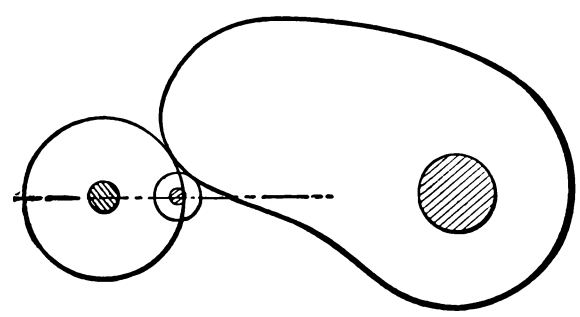

Fig. 230.

rolling motion of the point of contact evidently occurs easily, a quick roller motion is obtained without shock or vibration. Continuing the cam motion, we find in Fig. 230 that the point of contact is receding toward the line of motion on the large roller and advancing upon the small one, while in Fig. 231 the two

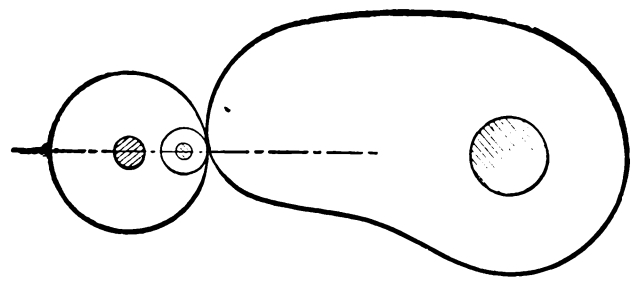

Fig. 231.

have contact at about the same point, the forward motion being about completed.

To compare the motions of the respective rollers along the line of motion A A we proceed as in Fig. 232, in which the two dots M and N are the same distance apart as are the centres of the two

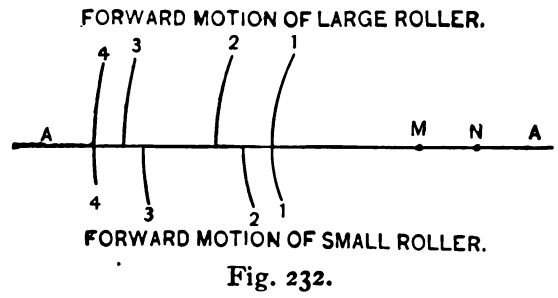

Fig. 232.

rollers B and C when in the positions they occupy in Fig. 228; hence a pair of compasses set to the radius from the axis of the cam to that of roller B will, if rested at N, strike the arc marked 1 above the line of motion A A, while a pair of compasses set to the radius from the axis of the cam to that of roller C in Fig. 228 will, if rested at M in Fig. 232, mark the arc 1 below the line of motion A A. Continuing this process, we set the compasses to the radius from the axis of the cam to that of roller B in Fig. 229, and mark this radius at arc 2 above the line A A in Fig. 232; hence the distance apart of these two arcs is the amount the roller travelled along the line A A while the cam moved from its position in Fig. 228 to its position in Fig. 229. Next we set the compasses from the axis of the cam to that of the large roller in Fig. 230, and then mark arc 3 above the line in Fig. 232, and

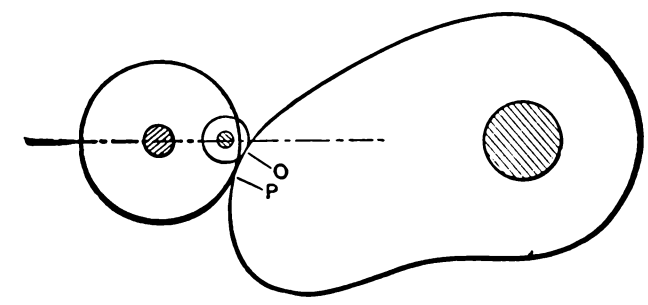

Fig. 233.

repeat the process for Fig. 233, thus using the centre N for all the positions of the large roller and marking its motion above the line A A. To get the motion of the small roller C, we set the compasses to the radius from the axis of the cam to the small roller in Fig. 228, and then resting one point of these compasses on centre M in Fig. 232, we mark arc 1 below the line A A. Turning to Fig. 229 we set the compasses from the cam axis to the centre of roller C, and from centre N in Fig. 232 mark arc 2 below line A. From Figs. 230 and 231 proceed in the same way

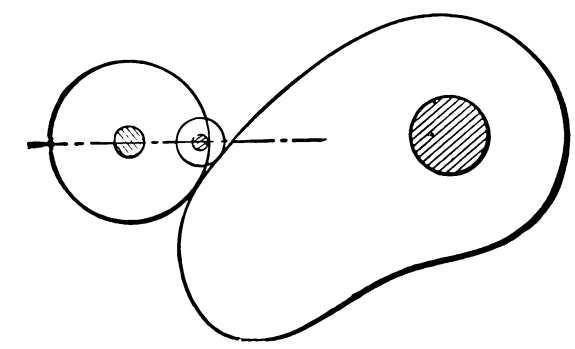

Fig. 234.

to get lines 3 and 4 below line A in Fig. 232, and we may at once compare the two motions. Thus we find that while the cam moved from the position in Fig. 228 to that in Fig. 229, the large roller moved twice as far as the small one, while at 230 the motions were rapidly equalizing again, the equalization being completed at 231.

We may now consider the return motion, and in Fig. 233 we find that the order of things is reversed, for the small roller has contact at O, while the large one has contact at P; hence the

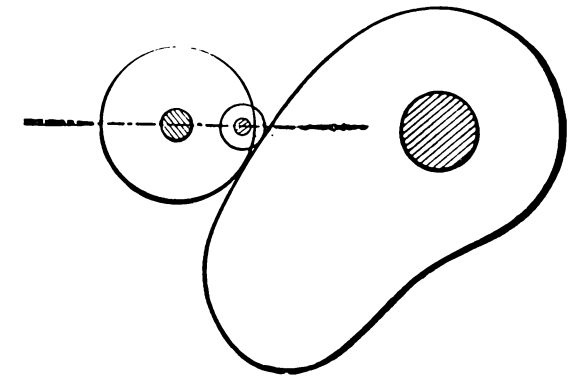

Fig. 235.

small one leads and gives the most rapid motion, which it continues to do, as is shown in Figs. 234, 235, and 236, and we may plot out the two motions as in Fig. 237—that for the large roller being above and that for the small one below the line A A. First we set a pair of compasses to the radius from the axis of the large and small roller when in the position shown in Fig. 231 (which corresponds to the same radius in Fig. 228), and mark two centres, M and N, as we did in Fig. 232. Of these N is the centre for plotting the motion of the large roller and M the centre for

plotting the motion of the small one. We set a pair of compasses to the radius from the axis of the cam and that of the large roller in Fig. 231, and then resting the compasses at N we mark arc 5 above the line A A, Fig. 237. The compasses are then set from the cam to the roller axis in Fig. 233, and arc 6 is

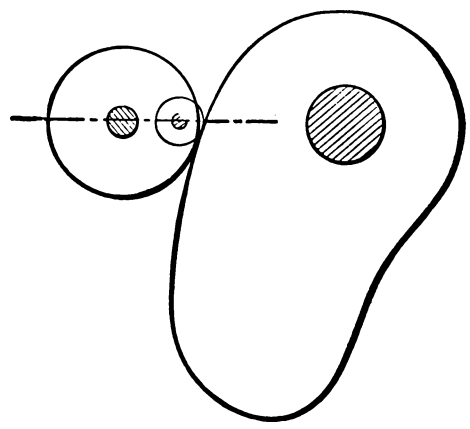

Fig. 236.

marked above line A A. From Figs. 234, 235, and 236 we get the radii to mark arcs 7, 8, 9 above A A, and the motion of the large roller is plotted. We proceed in the same way for the small one, but use the centre M, Fig. 237, to mark the arcs 5, 6, 7, 8, and 9 below the line A A, and find that the small roller has moved

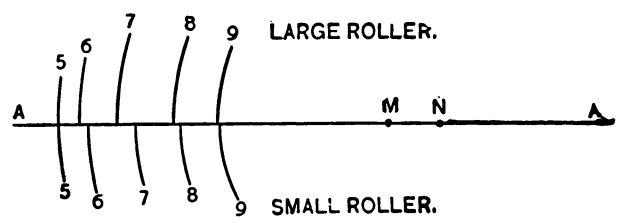

Fig. 237.

quickest throughout. It appears, then, that the larger the roller the quicker the forward motion and the slower the return one, which is advantageous, because the object is to move the roller out quickly and close it slowly, so that under a quick speed the cam shall not run away from the roller as it is apt to do in the absence of a return or backing cam, which consists of a separate cam for moving the roller on its return stroke, thus dispensing with the use of springs or weights to keep the roller upon the cam and making the motion positive.

The return or backing cam obviously depends for its shape upon the forward cam, and the latter having been determined, the requisite form for the return cam may be found as follows. In Fig. 238 let A represent the forward cam fastened in any suitable or convenient way to a disc of paper, or, what is better, sheet zinc, B. The cam is pivoted by a pin passing through it and the zinc, and driven into the drawing-board. A frame F is made to carry two rollers R and R′, whose width apart exactly equals the extreme length of the forward cam. The faces D D of the frame F are in a line with a line passing through the centres of the rolls R R′, and the cam is also pivoted on this line, so that when the four pins P are driven into the drawing-board, the frame F will be guided by them to move in a line that crosses the centre of the cam A. Suppose then that, the pieces occupying the position shown in the engraving, we slide F so that roller R touches the edge of cam A, and we may then take a needle and mark an arc or line around the edge of R′. We then revolve cam A a trifle, and, being fast to B, the two will move together, and with R against A we mark a second arc, coincident with the edge of roller

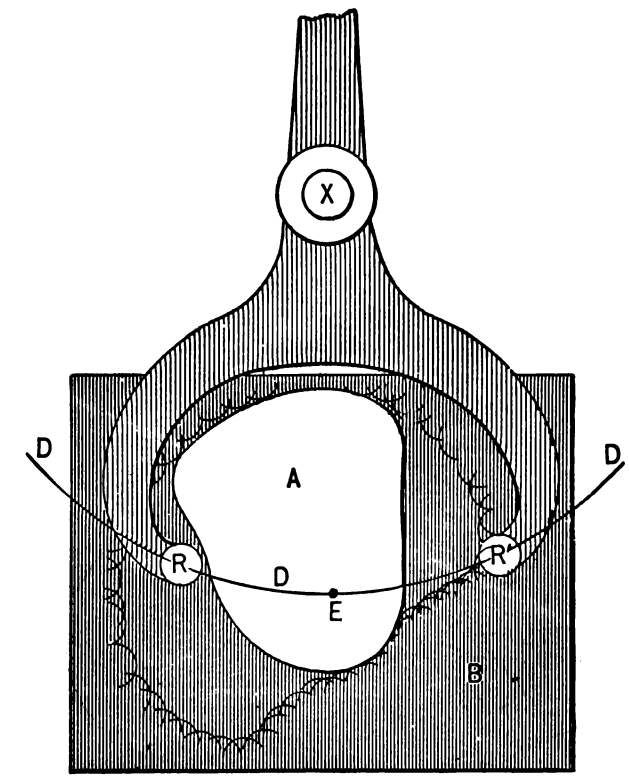

Fig. 239.

R′. By continuing this process we mark the numerous short arcs shown upon B, and the crowns of these arcs give us the outline of the return cam. It is obvious that, while the edge of the cam A will not let roller R (and therefore frame F) move to the right, roller R′ being against the edge of the backing or return cam as marked upon B, prevents the frame F from moving to the left; hence neither roll can leave its cam.

We have in this example supposed that the frame carrying the rollers is guided to move in a straight line, and it remains to give an example in which the rollers are carried on a pivoted shaft or rocking arm. In Fig. 239 we have the same cam A with a sheet

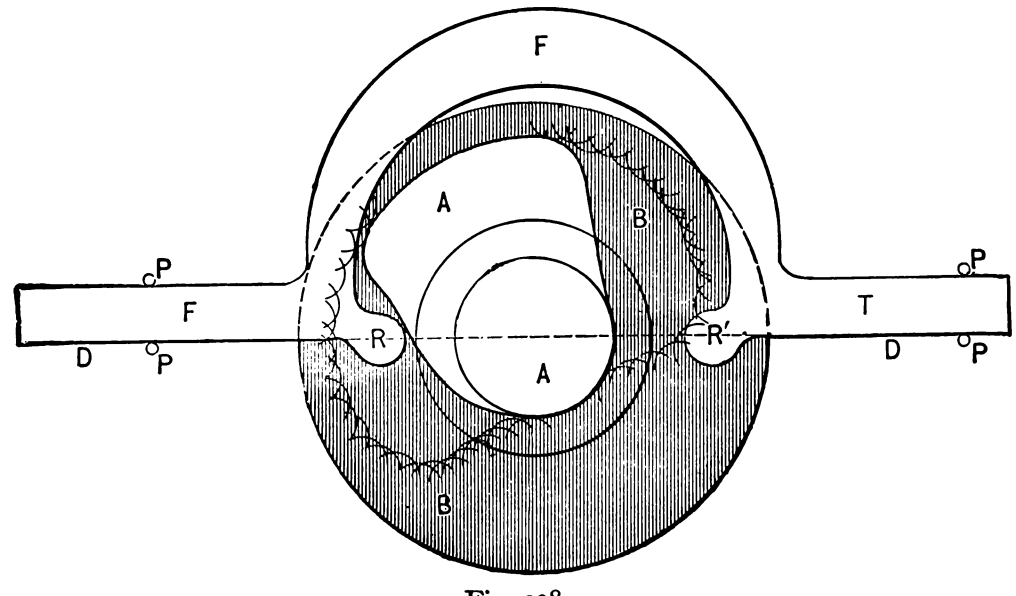

Fig. 238.

of paper B fastened to it, the rollers R R′ being carried in a rock shaft pivoted at X. It is essential in this case that the rollers R and R′ and the centre upon which the cam revolves shall all three be in the arc of a circle whose centre is the axis of X, as is denoted by the arc D. The cam A is fastened to the piece of stiff paper or of sheet zinc B, and the two are pivoted by a pin passing

through the axis E of the cam and into the drawing-board, while the lever is pivoted at X by a pin passing into the drawing-board. The backing or return cam is obviously marked out the same way as was described with reference to Fig. 238.

In Fig. 240 we have as an example the construction of a cam to operate the slide valve of an engine which is to have the steam

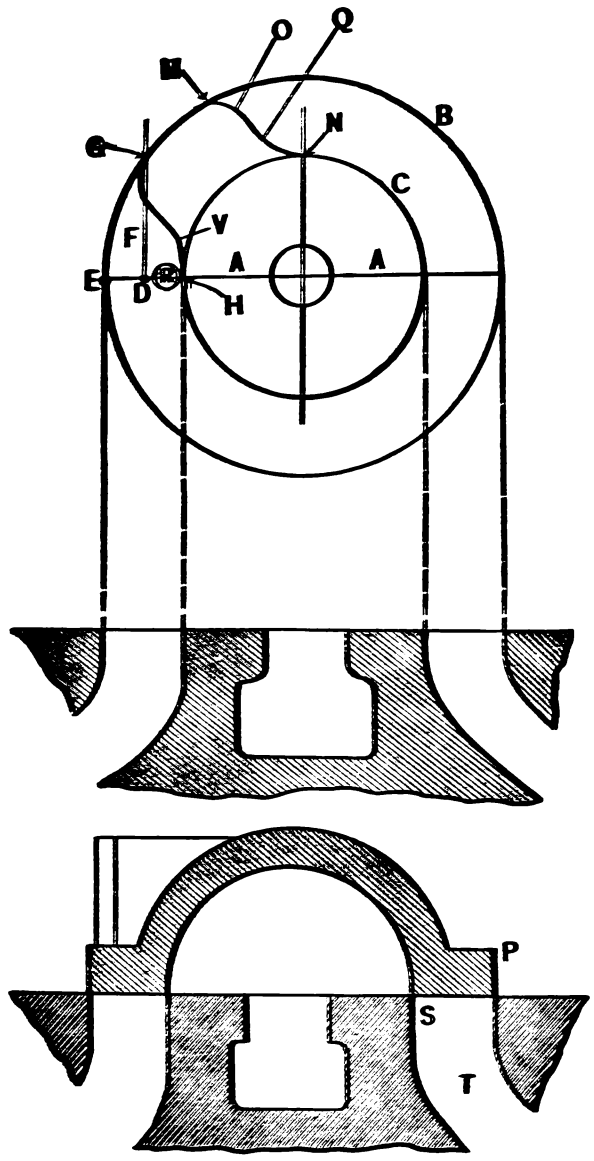

Fig. 240.

supply to the cylinder cut off at one-half the piston stroke, and that will admit the live steam as quickly as a valve having steam lap equal to, say, three-fourths the width of the port. In Fig. 240 let the line A represent a piston stroke of 24 inches, the outer circle B the path of the outer edge of the cam, and the inner circle C the inner edge of the cam, the radius between these circles representing the full width of the steam port. Now, in a valve

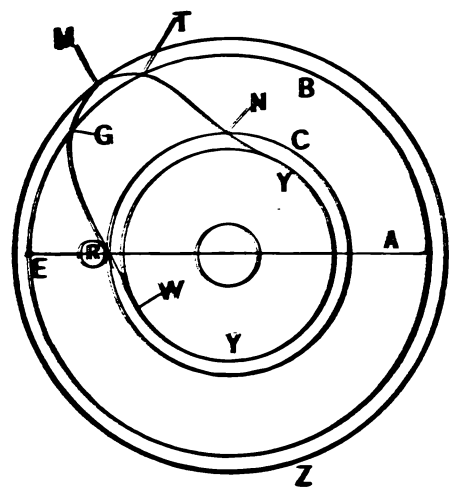

Fig. 241.

having lap equal to three-fourths the width of the steam port, and travel enough to open both ports fully, the piston of a 24-inch-stroke engine will have moved about 2 inches before the steam port is fully opened, and to construct a cam that will effect the same movement we mark a dot D, distant from the end E of piston stroke $\frac{2}{24}$ of the length of the line A, and by erecting the line F we get at point G, the point at which the cam must attain its greatest throw. It is obvious, therefore, that as the roller is at R the valve will be in mid-position, as shown at the bottom of the figure, and that when point G of the cam arrives at E the edge P of the valve will be moved fair with edge S of the steam port T, which will therefore be full open. To cut off at half stroke the valve must again be closed by the time point N of the cam meets the roller R; hence we may mark point N. We may then mark in the cam curve from N to M, making it as short as it will work properly without causing the roller to fail to follow the curve or strike a blow when reaching the circle C. To accomplish this end in a single cam, it is essential to make the curve as gradual as possible from point M to O, so as to start the roller motion easily. But once having fairly started, its motion may be rapidly accelerated, the descent from O to Q being rapid. To prevent the roller from meeting circle C with a blow, the curve from Q to N is again made gradual, so as to ease and retard the roller motion. The same remarks apply to the curve from R to G, the object being to cause the roller to begin and end its passage along the cam curve as slowly as the length of cam edge occupied by the curve will permit. There is one objection to starting the curve slowly at G, which is that the port S will be opened correspondingly slowly for the live steam. This, however, may be overcome by giving the valve an increased travel, as shown in Fig. 241, which will simply cause the valve edge to travel to a corresponding amount over the inside edge of the port. The increased travel is shown by the circles Y and Z, and it is seen that the cam curve from W to R is more gradual than in Fig. 240, while the

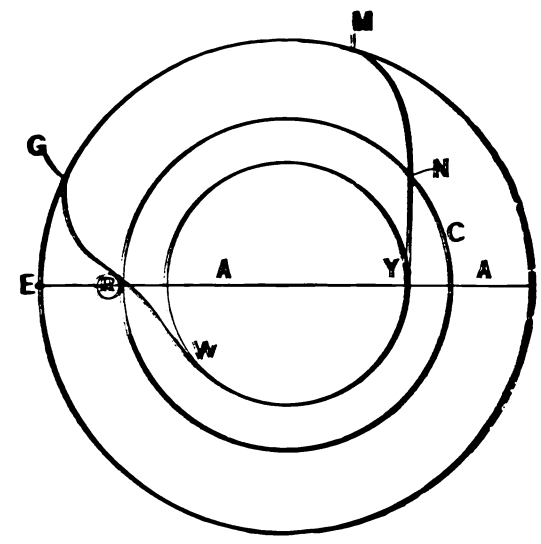

Fig. 242.

roller R will be moved much more quickly in the position shown in Fig. 241 than it will in that shown in Fig. 240, both positions being that when the piston is at the end of the stroke and the port about to open. While that part of the cam curve from G to M in Fig. 241 is moving past the roller R, the valve will be moving over the bridge, the steam port remaining wide open, and therefore not affecting the steam distribution. After point M, Fig. 241, has passed the roller, we have from M to T to start the roller gradually, so that when it has arrived at T and the port begins to close for the cut-off it may move rapidly, and continue to do so until the point N reaches the roller and the cut-off has occurred, after which it does not matter how slowly the valve moves; hence we may make the curve from N to the circle Y as gradual as we like.

Fig. 242 represents a cam for a valve having the amount of lap represented by the distance between circles C and Y, the cam occupying the position it would do with the piston at one end of the stroke, as at E. Obviously, a full port is obtained when point G reaches the roller, and as point N is distant from E three-quarters of the diameter of the outer circle, the cut-off occurs at three-quarter stroke, and we have from N to Y to make the curve as gradual as we like, and from W to R in moving the valve to open the port. We cannot, however, give more gradual curves at G and at M without retarding the roller motion, and therefore opening and closing the port slower, and it would simply be a matter of increase of speed to cause the roller to fail to follow

the cam surface at these two points unless a return cam be employed.

We have in these engine cams considered the steam supply and point of cut-off only, and it is obvious that a second and separate cam would be required to operate the exhaust valves.

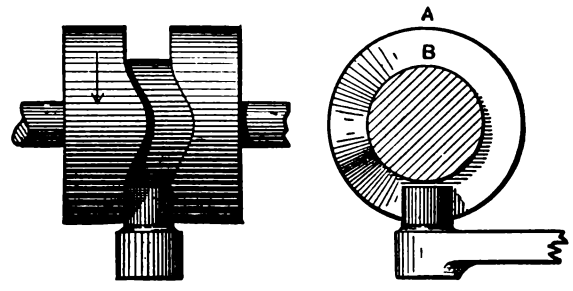

Fig. 243.

Fig. 243 represents a groove-cam, and it is to be observed that the roller cannot be maintained a close fit in the groove, because the friction on its two sides endeavours to drive it in opposite directions at the same time, causing an abrasion that soon widens

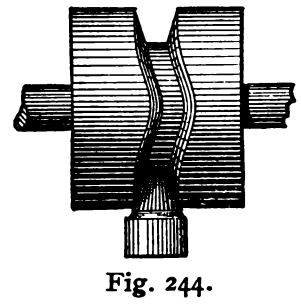

Fig. 244.

the groove and reduces the roller diameter; furthermore, when the grooves are made of equal width all the way down (and these cams are often made in this way) the roller cannot have a rolling action only, but must have some sliding motion. Thus, referring to Fig. 243, the amount of sliding motion will be equal to the differences in the circumferences of the outer circle A and the inner one B. To obviate this the groove and roller must be made of such a taper that the axis of the cam and of the roller will meet on the line of the cam axes and in the middle of the width, as is shown in Fig. 244; but even in this case the cam will grind away the roller to some extent, on account of rubbing its sides in opposite directions. To obviate this, Mr. James Brady, of Brooklyn, N. Y., has patented the use of two rollers, as in Fig. 245, one acting against one side and the other against the

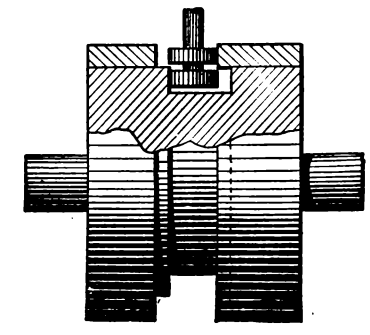

Fig. 245.

other side of the groove, by which means lost motion and rapid wear are successfully avoided.

In making a cam of this form, the body of the cam is covered by a sleeve. The groove is cut through the sleeve and into the body, and is made wider than the diameter of the roller. When the rollers are in place on the spindle or journal, the sleeve is pushed forward, or rather endways, and fastened by a set-screw. This gives the desired bearing on both sides of the groove, while each roller touches one side only of the groove. The edges of the sleeve are then faced off even with the cam body, the whole appearing as in the figure.

THE V-THREAD.

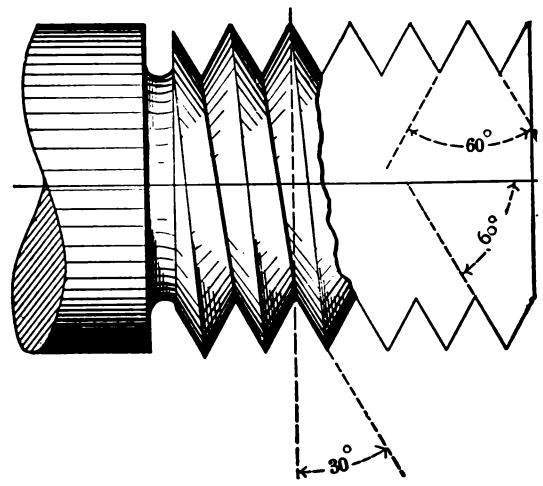

Fig. 246.

THE UNITED STATES STANDARD THREAD.

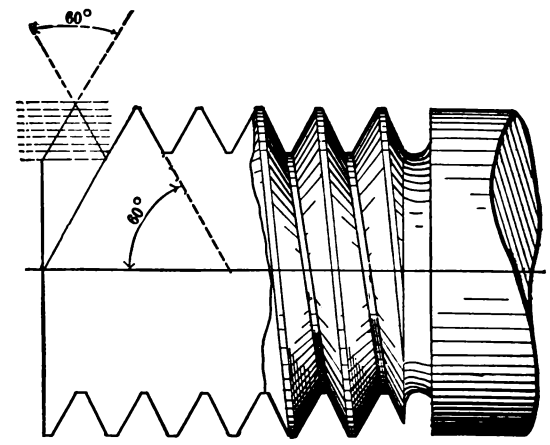

Fig. 247.

THE WHITWORTH, OR ENGLISH STANDARD THREAD.

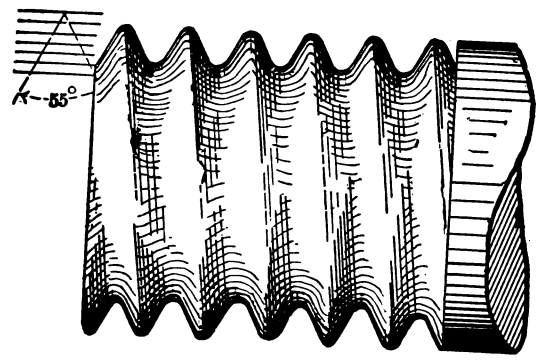

Fig. 248.

THE SQUARE THREAD.

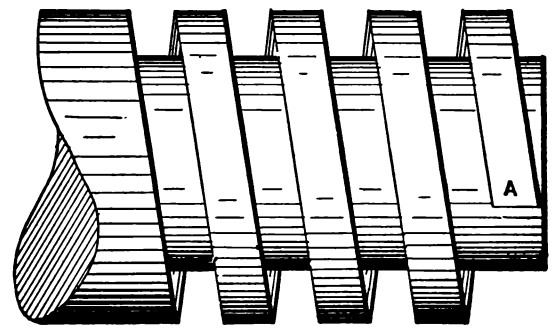

Fig. 249.

THE PITCH OF A THREAD.

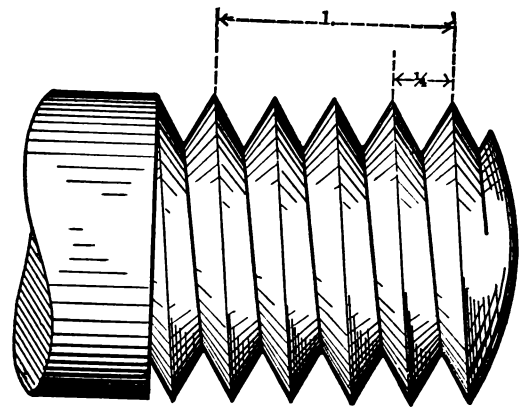

Fig. 250.

A DOUBLE THREAD.

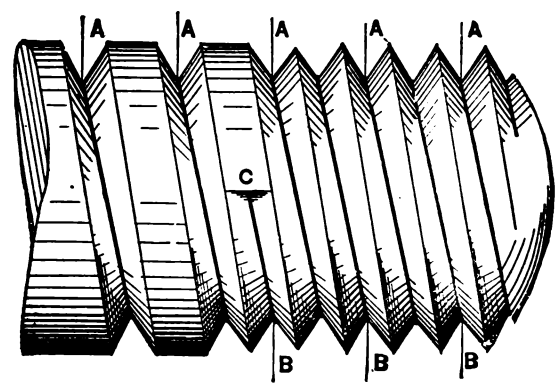

Fig. 251.

THE RATCHET THREAD.

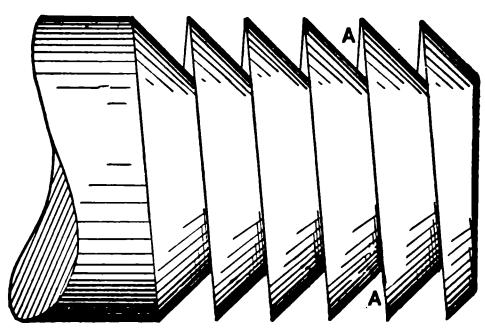

Fig. 252.

A "DRUNKEN" THREAD.

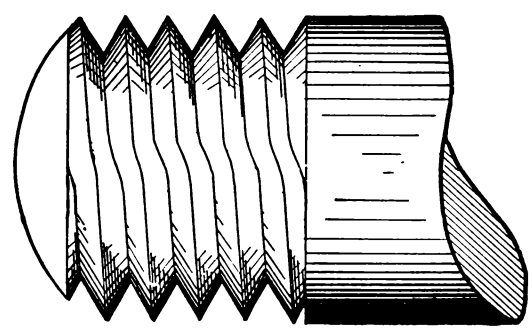

Fig. 253.

RIGHT AND LEFT HAND THREAD.

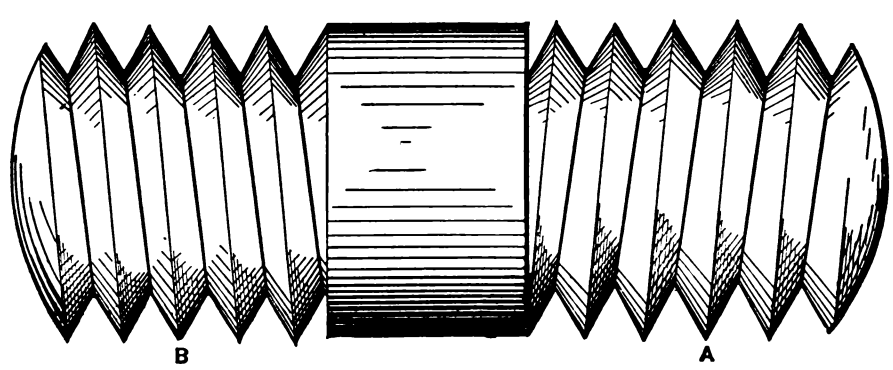

Fig. 254.

CHAPTER IV.—SCREW THREAD.

SCREW threads are employed for two principal purposes—for holding or securing, and for transmitting motion. There are in use, in ordinary machine shop practice, four forms of screw thread. There is, first, the sharp V-thread shown in Fig. 246; second, the United States standard thread, the Sellers thread, or the Franklin Institute thread, as it is sometimes called—all three designations signifying the same form of thread. This thread was originally proposed by William Sellers, and was afterward recommended by the Franklin Institute. It was finally adopted as a standard by the United States Navy Department. This form of thread is shown in Fig. 247. The third form is the Whitworth or English standard thread, shown in Fig. 248. It is sometimes termed the round top and bottom thread. The fourth form is the square thread shown in Fig. 249, which is used for coarse pitches, and usually for the transmission of motion.

The sharp V-thread, Fig. 246, has its sides at an angle of 60° one to the other, as shown; or, in other words, each side of the thread is at an angle of 60° to the axial line of the bolt. The United States Standard, Fig. 247, is formed by dividing the depth of the sharp V-thread into 8 equal divisions and taking off one of the divisions at the top and filling in another at the bottom, so as to leave a flat place at the top and bottom. The Whitworth thread, Fig. 248, has its sides at an angle of 55° to each other, or to the axial line of the bolt. In this the depth of the thread is divided into 6 equal parts, and the sides of the thread are joined by arcs of circles that cut off one of these parts at the top and another at the bottom of the thread. The centres from which these arcs are struck are located on the second lines of division, as denoted in the figure by the dots. Screw threads are designated by their pitch or the distance between the threads. In Fig. 250 the pitch is $\frac{1}{4}$ inch, but it is usual to take the number of threads in an inch of length; hence the pitch in Fig. 250 would generally be termed a pitch of 4, or 4 to the inch. The number of threads per inch of length does not, however, govern the true pitch of the thread, unless it be a "single" thread.

A single thread is composed of one spiral projection, whose advance upon the bolt is equal in each revolution to the apparent pitch. In Fig. 251 is shown a double thread, which consists of two threads. In the figure, A denotes one spiral or thread, and B the other, the latter being carried as far as C only for the sake of illustration. The true pitch is in this case twice that of the apparent pitch, being, as is always the case, the number of revolutions the thread makes around the bolt (which gives the pitch per inch), or the distance along the bolt length that the nut or thread advances during one rotation. Threads may be made double, treble, quadruple and so on, the object being to increase the motion without the use of a coarser pitch single thread, whose increased depth would weaken the body of the bolt.

The "ratchet" thread shown in Fig. 252 is sometimes used upon bolts for ironwork, the object being to have the sides A A of the thread at a right angle to the axis of the bolt, and therefore in the direct line of the strain. Modifications of this form of thread are used in coarse pitches for screws that are to thread direct into woodwork.

A waved or drunken thread is one in which the path around the bolt is waved, as in Fig. 253, and not a continuous straight spiral, as it should be. All threads may be either left hand or right, according to their direction of inclination upon the bolt; thus, Fig. 254 is a cylinder having a right-hand thread at A and a left-hand one at B. When both ends of a piece have either right or left-hand threads, if the piece be rotated and the nuts be prevented from rotating, they will move in the same direction, and, if the pitches of the threads are alike, at the same rate of motion; but if one thread be a right and the other a left one, then, under the above conditions, the nuts will advance toward or recede from each other according to the direction of rotation of the male thread.

In Fig. 255 is represented a form of thread designed to enable the nut to fit the bolt, and the thread sides to have a bearing one upon the other, notwithstanding that the diameter of the nut and bolt may differ. The thread in the nut is what may be termed a reversed ratchet thread, and that in the bolt an undercut ratchet thread, the amount of undercut being about 2°. Where this form of thread is used, the diameter of the bolt may vary as much as 1-32d of an inch in a bolt $\frac{3}{4}$ inch in diameter, and yet the nut will screw home and be a tight fit. The difference in the thread fit that ordinarily arises from differences in the standards of measurement from wear of the threading tools, does not in this form affect the fit of the nut to the bolt. In screwing the nut on, the threads conform one to the other, giving a bearing area extending over the full sides of the thread. The undercutting on the leading face of the bolt thread gives room for the metal to conform itself to the nut thread, which it does very completely. The result is that the nut may be passed up and down the bolt several times and still remain too tight a fit to be worked by hand. Experiment has demonstrated that it may be run up and down the bolt dozens of times without becoming as loose as an ordinary bolt and nut. On account of this capacity of the peculiar form of

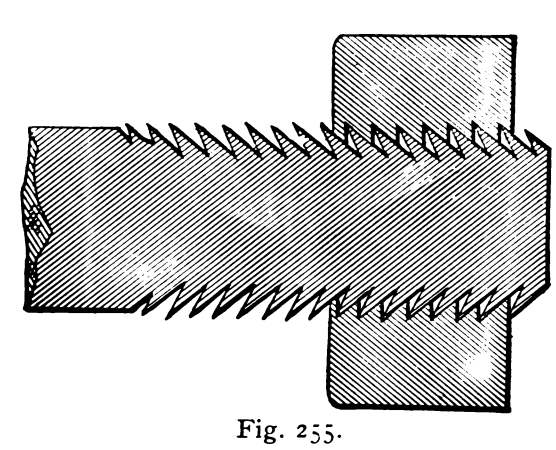

Fig. 255.

thread employed, to adapt itself, the threads may be made a tight fit when the threading tools are new. The extra tightness that arises from the wear of these tools is accommodated in the undercutting, which gives room for the thread to adjust itself to the opposite part or nut.

In a second form of self-locking thread, the thread on the bolt is made of the usual V-shape United States standard. The thread in the nut, however, is formed as illustrated in Fig. 256, which is a section of a $\frac{3}{4}$-inch bolt, greatly enlarged for the sake of clearness of illustration. The leading threads are of the same angle as the thread on the bolt, but their diameters are $\frac{3}{4}$ and 1-16th inch, which allows the nut to pass easily upon the bolt. The angle of the next thread following is 56°, the succeeding one 52°, and so on, each thread having 4° less angle than the one preceding, while the pitch remains the same throughout. As a result, the rear threads are deeper than the leading ones. As the nut is screwed home, the bolt thread is forced out or up, and fills the rear threads to a degree depending upon the diameter of the bolt thread. For example, if the bolt is $\frac{3}{4}$ inch, its leading or end thread will simply change its angle from that of 60° to that of 44°, or if the bolt thread is $\frac{3}{4}$ and 1-64th inch in diameter, its leading thread will change from an angle of 60° to one of 44°. It will almost completely fill the loose thread in the nut. The areas of spaces between the nut threads are very nearly equal, although

slightly greater at the back end of the nut, so that if the front end will enter at all, the nut will screw home, while the thread fit will be tight, even under a considerable variation in the bolt itself. From this description, it is evident that the employment of nuts threaded in this manner is only necessary in order to give to ordinary bolts all the advantages of tightness due to this form of thread.

The term "diameter" of a thread is understood to mean its diameter at the top of the thread and measured at a right angle to the axis of the bolt. When the diameter of the bottom or root of the thread is referred to it is usually specified as diameter at the bottom or at the root of the thread.

The depth of a thread is the vertical height of the thread upon the bolt, measured at a right angle to the bolt axis and not along the side of the thread.

A true thread is one that winds around the bolt in a continuous and even spiral and is not waved or drunken as is the thread in Fig. 253. An outside or male thread is one upon an external surface as upon a bolt; an internal or female thread is one produced in a bore or hole as in a nut.

The Whitworth or English standard thread, shown in Fig. 248, is that employed in Great Britain and her colonies, and to a small extent in the United States. The V-thread fig. 246 is that in most common use in the United States, but it is being displaced by the United States standard thread. The reasons for

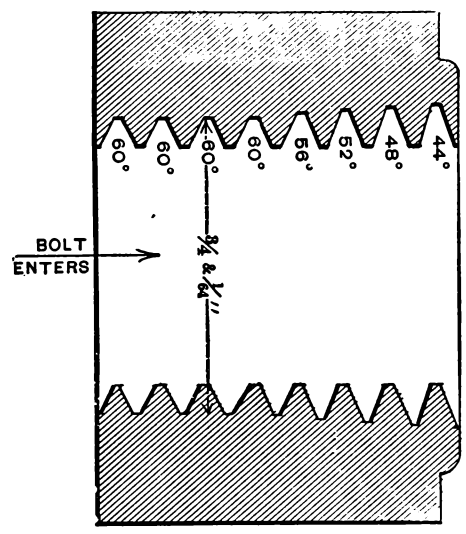

Fig. 256.

the adoption of the latter by the Franklin Institute are set forth in the report of a committee appointed by that Institute to consider the matter. From that report the following extracts are made.

"That in the course of their investigations they have become more deeply impressed with the necessity of some acknowledged standard, the varieties of threads in use being much greater than they had supposed possible; in fact, the difficulty of obtaining the exact pitch of a thread not a multiple or sub-multiple of the inch measure is sometimes a matter of extreme embarrassment.

"Such a state of things must evidently be prejudicial to the best interests of the whole country; a great and unnecessary waste is its certain consequence, for not only must the various parts of new machinery be adjusted to each other, in place of being interchangeable, but no adequate provision can be made for repairs, and a costly variety of screwing apparatus becomes a necessity. It may reasonably be hoped that should a uniformity of practice result from the efforts and investigations now undertaken, the advantages flowing from it will be so manifest, as to induce reform in other particulars of scarcely less importance.

"Your committee have held numerous meetings for the purpose of considering the various conditions required in any system which they could recommend for adoption. Strength, durability, with reference to wear from constant use, and ease of construction, would seem to be the principal requisites in any general system; for although in many cases, as, for instance, when a square thread is used, the strength of the thread and bolt are both sacrificed for the sake of securing some other advantage, yet all such have been considered as special cases, not affecting the general inquiry. With this in view, your committee decided that threads having their sides at an angle to each other must necessarily more nearly fulfil the first condition than any other form; but what this angle should be must be governed by a variety of considerations, for it is clear that if the two sides start from the same point at the top, the greater the angle contained between them, the greater will be the strength of the bolt; on the other hand, the greater this angle, supposing the apex of the thread to be over the centre of its base, the greater will be the tendency to burst the nut, and the greater the friction between the nut and the bolt, so that if carried to excess the bolt would be broken by torsional strain rather than by a strain in the direction of its length. If, however, we should make one side of the thread perpendicular to the axis of the bolt, and the other at an angle to the first, we should obtain the greatest amount of strength, together with the least frictional resistance; but we should have a thread only suitable for supporting strains in one direction, and constant care would be requisite to cut the thread in the nut in the proper direction to correspond with the bolt; we have consequently classed this form as exceptional, and decided that the two sides should be at an angle to each other and form equal angles with the base.

"The general form of the thread having been determined upon the above considerations, the angle which the sides should bear to each other has been fixed at 60°, not only because this seems to fulfil the conditions of least frictional resistance combined with the greatest strength, but because it is an angle more readily obtained than any other, and it is also in more general use. As this form is in common use almost to the exclusion of any other, your committee have carefully weighed its advantages and disadvantages before deciding to recommend any modification of it. It cannot be doubted that the sharp thread offers us the simplest form, and that its general adoption would require no special tools for its construction, but its liability to accident, always great, becomes a serious matter upon large bolts, whilst the small amount of strength at the sharp top is a strong inducement to sacrifice some of it for the sake of better protection to the remainder; when this conclusion is reached, it is at once evident a corresponding space may be filled up in the bottom of the thread, and thus give an increased strength to the bolt, which may compensate for the reduction in strength and wearing surface upon the thread. It is also clear that such a modification, by avoiding the fine points and angles in the tools of construction, will increase their durability; all of which being admitted, the question comes up, what form shall be given to the top and bottom of the thread? for it is evident one should be the converse of the other. It being admitted that the sharp thread can be made interchangeable more readily than any other, it is clear that this advantage would not be impaired if we should stop cutting out the space before we had made the thread full or sharp; but to give the same shape at the bottom of the threads would require that a similar quantity should be taken off the point of the cutting tool, thus necessitating the use of some instrument capable of measuring the required amount, but when this is done the thread having a flat top and bottom can be quite as readily formed as if it was sharp. A very slight examination sufficed to satisfy us that in point of construction the rounded top and bottom presents much greater difficulties—in fact, all taps and screws that are chased or cut in a lathe require to be finished or rounded by a second process. As the radius of the curve to form this must vary for every thread, it will be impossible to make one gauge to answer for all sizes, and very difficult, in fact impossible, without special tools, to shape it correctly for one.

"Your committee are of opinion that the introduction of a uniform system would be greatly facilitated by the adoption of such a form of thread as would enable any intelligent mechanic to construct it without any special tools, or if any are necessary, that they shall be as few and as simple as possible, so that although the round top and bottom presents some advantages when it is perfectly made, as increased strength to the thread and the best form to the cutting tools, yet we have considered that these are more than compensated by ease of construction,

the certainty of fit, and increased wearing surface offered by the flat top and bottom, and therefore recommend its adoption. The amount of flat to be taken off should be as small as possible, and only sufficient to protect the thread; for this purpose one-eighth of the pitch would seem to be ample, and this will leave three-fourths of the pitch for bearing surface. The considerations governing the pitch are so various that their discussion has consumed much time.

"As in every instance the threads now in use are stronger than their bolts, it became a question whether a finer scale would not be an advantage. It is possible that if the use of the screw thread was confined to wrought iron or brass, such a conclusion might have been reached, but as cast iron enters so largely into all engineering work, it was believed finer threads than those in general use might not be found an improvement; particularly when it was considered that so far as the vertical height of thread and strength of bolt are concerned, the adoption of a flat top and bottom thread was equivalent to decreasing the pitch of a sharp thread 25 per cent., or what is the same thing, increasing the number of threads per inch 33 per cent. If finer threads were adopted they would require also greater exactitude than at present exists in the machinery of construction, to avoid the liability of overriding, and the wearing surface would be diminished; moreover, we are of opinion that the average practice of the mechanical world would probably be found better adapted to the general want than any proportions founded upon theory alone."

* * * * * * * *

The principal requirements for a screw thread are as follows: 1. That it shall possess a strength that, in the length or depth of a nut, shall be equal to the strength of the weakest part of the bolt, which is at the bottom of the bolt thread. 2. That the tools required to produce it shall be easily made, and shall not alter

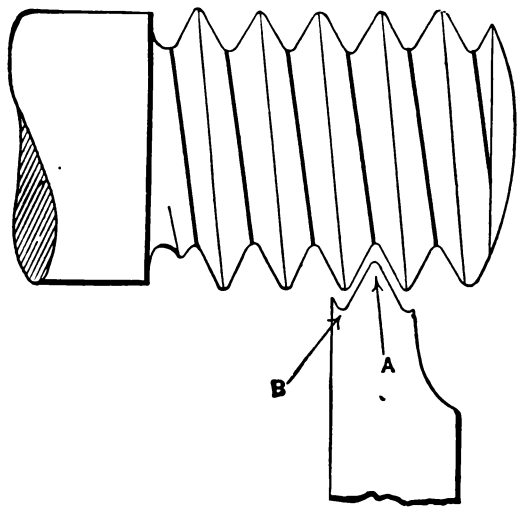

Fig. 257.

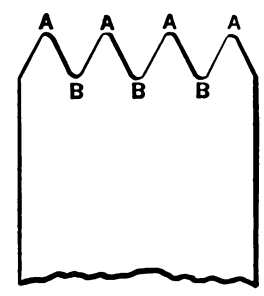

Fig. 258.

their form by reason of wear. 3. That these tools shall (in the case of lathe work) be easily sharpened, and set to correct position in the lathe. 4. That a minimum of measuring and gauging shall be required to test the diameter and form of the thread. 5. That the angles of the sides shall be as acute as is consistent with the required strength. 6. That it shall not be unduly liable to become loose in cases where the nut may require to be fastened and loosened occasionally.

Referring to the first, by the term "the strength of a screw thread," is not meant the strength of one thread, but of so many threads as are contained in the nut. This obviously depends upon the depth or thickness of the nut-piece. The standard thickness of nut, both in the United States and Whitworth systems, as well as in general practice, or where the common V-thread is used, is made equal to the diameter of the top of the thread. Therefore, by the term "strength of thread" is meant the combined strength of as many threads as are contained in a nut of the above named depth. It is obvious, then, when it is advantageous to increase the strength of a thread, that it may be done by increasing the depth of the nut, or in other words, by increasing the number of threads used in computing its strength. This is undesirable by reason of increasing the cost and labor of producing the nuts, especially as the threading tools used for nuts are the weakest, and are especially liable to breakage, even with the present depth of nuts.

It has been found from experiments that have been made that our present threads are stronger than their bolts, which is desirable, inasmuch as it gives a margin for wear on the sides of the threads. But for threads whose nuts are to remain permanently fastened and are not subject to wear, it is questionable whether it were not better for the bolts to be stronger than the threads. Suppose, for instance, that a thread strips, and the bolt will remain in place because the nut will not come off the bolt readily. Hence the pieces held by the bolt become loosened, but not disconnected. If, on the other hand, the bolt breaks, it is very liable to fall out, leaving the piece or pieces, as the case may be, to fall apart, or at least become disconnected, so far as the bolt is concerned. But since threads are used under conditions where the threads are liable to wear, and since it is undesirable to have more than one

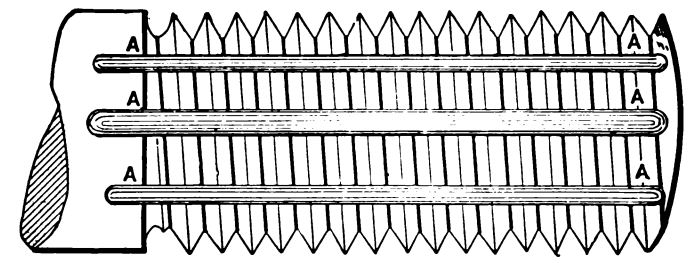

Fig. 259.

standard thread, it is better to have the threads, when new, stronger than the bolts.

Referring to the second requirement, screw threads or the tools that produce them are originated in the lathe, and the difficulty with making a round top and bottom thread lies in shaping the corner to cut the top of the thread. This is shown in Fig. 257, where a Whitworth thread and a single-toothed thread-cutting tool are represented. The rounded point A of the tool will not be difficult to produce, but the hollow at B would require special tools to cut it. This is, in fact, the plan pursued under the Whitworth system, in which a hob or chaser-cutting tool is used to produce all the thread-cutting tools. A chaser is simply a toothed tool such as is shown in Fig. 258. Now, it would manifestly be impracticable to produce a chaser having all the curves, A and B, at the top and at the bottom of the teeth alike, by the grinding operations usually employed in the workshop, and hence the employment of the hob. Fig. 258 represents a hob, which is a threaded piece of steel with a number of grooves such as shown at A,A,A, which divide the thread into teeth, the edges of which will cut a chaser, of a form corresponding to that of the thread upon the hob. The chaser is employed to produce taps and secondary hobs to be used for cutting the threads in dies, &c., so that the original hob is the source from which all the thread-cutting tools are derived.

For the United States standard or the common V-thread, however, no standard hob is necessary, because a single-pointed tool can be ground with the ordinary grinding appliances of the work-

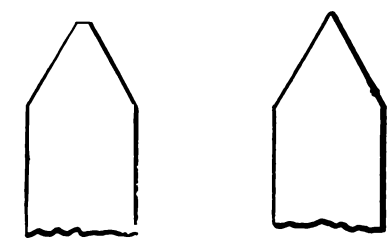

Fig. 260.

shop. Thus, for the United States standard, a flat-pointed tool, Fig. 260, and for the common V-thread, a sharp-pointed tool, Fig. 260, may be used. So far as the correctness of angle of pitch and of thread depth are concerned, the United States standard and the common V-thread can both be produced, under skilful operation, more correctly than is possible with the Whitworth thread, for the following reasons:—

To enable a hob to cut, it must be hardened, and in the hardening process the pitch of the thread alters, becoming, as a

general rule (although not always) finer. This alteration of pitch is not only irregular in different threads, but also in different parts of the same thread. Now, whatever error the hob thread receives from hardening it transfers to the chaser it cuts. But the chaser also alters its form in hardening, the pitch, as a general rule, becoming coarser. It may happen that the error induced in the hob hardening is corrected by that induced by hardening the chaser, but such is not necessarily the case.

The single-pointed tool for the United States standard or for the common V-thread is accurately ground to form after the hardening, and hence need contain no error. On the other hand, however, the rounded top and bottom thread preserves its form

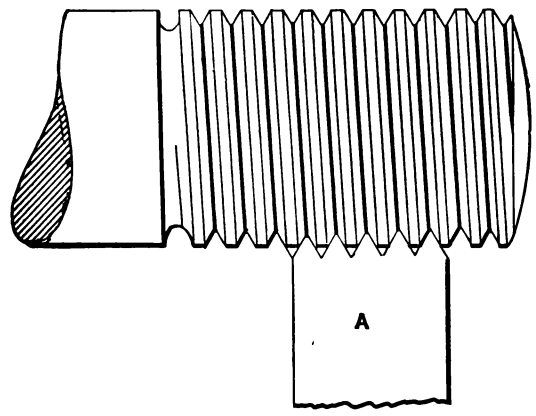

Fig. 261.

and diameter upon the thread-cutting tools better than is the case with threads having sharp corners, for the reason that a rounded point will not wear away so quickly as a sharp point. To fully perceive the importance of this, it is necessary to consider the action of a tool in cutting a thread. In Fig. 261 there is shown a chaser, A, applied to a partly-formed thread, and it will be observed that the projecting ends or points of the teeth are in continuous action, cutting a groove deeper and deeper until a full thread is developed, at which time the bottoms of the chaser teeth will meet the perimeter of the work, but will perform no cutting duty upon it. As a result, the chaser points wear off, which they will do more quickly if they are pointed, and less quickly if they are rounded. This causes the thread cut to be of increased and improper diameter at the root.

The same defect occurs on the tools for cutting internal threads, or threads in holes or bores. In Fig. 262, for example, is shown

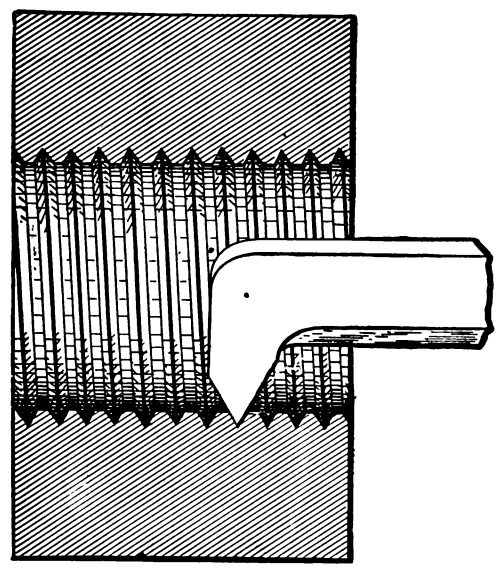

Fig. 262.

a tool cutting an internal thread, which tool may be taken to represent one tooth of a tap. Here again the projecting point of the tool is in continuous cutting action, while this, being a single-toothed tool, has no bottom corners to suffer from wear. As a result of the wear upon the tools for cutting internal threads, the thread grooves, when cut to their full widths, will be too shallow in depth, or, more correctly speaking, the full diameter of the thread will be too small to an amount corresponding to twice the amount of wear that the tool point has suffered. In single-pointed tools, such as are used upon lathe work, this has but little significance, because it is the work of but a minute or two to grind up the tool to a full point again, but in taps and solid dies, or in chasers in heads (as in some bolt-cutting machines) it is highly important, because it impairs the fit of the threads, and it is difficult to bring the tools to shape after they are once worn.

The internal threads for the nuts of bolts are produced by a tap formed as at T in Fig. 263. It consists of a piece of steel having

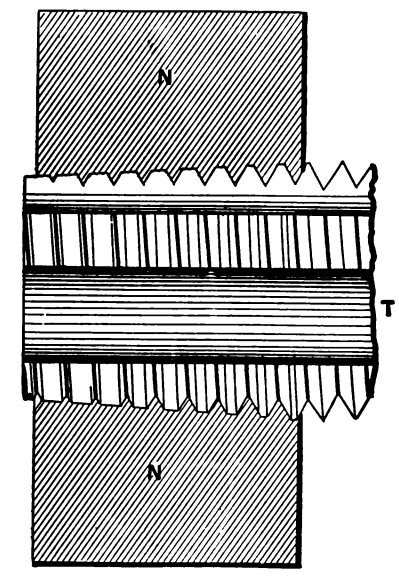

Fig. 263.

an external thread and longitudinal flutes or grooves which cut the thread into teeth. The end of the thread is tapered off as shown, to enable the end of the tap to enter the hole, and as it is rotated and the nut N held stationary, the teeth cut grooves as the tap winds through, thus forming the thread.

The threads upon bolts are usually produced either by a head containing chasers or by a solid die such as shown at A in Fig. 264, B representing a bolt being threaded. The bore of A is threaded and fluted to provide cutting teeth, and the threads are chamfered off at the mouth to assist the cutting by spreading

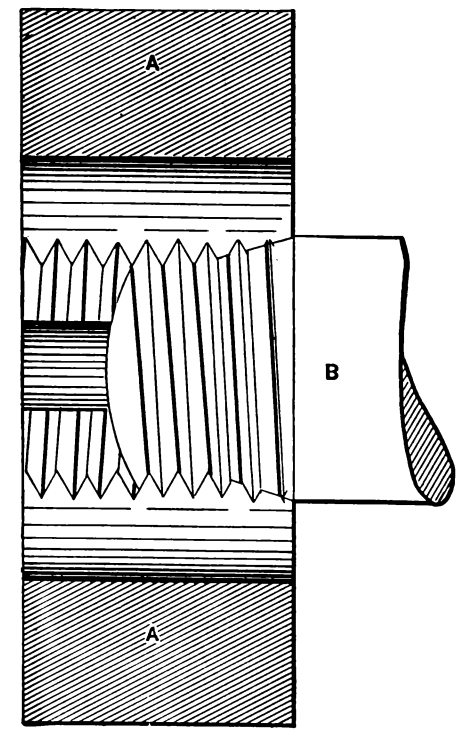

Fig. 264.

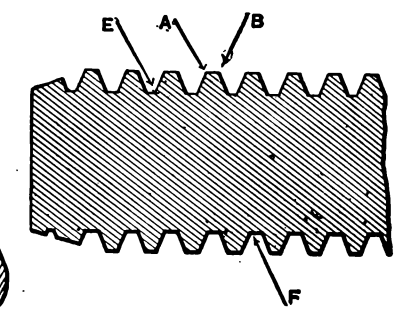

Fig. 265.

it over several teeth, which enables the bolt to enter the die more easily.

We may now consider the effect of continued use and its consequent wear upon the threads or teeth of a tap and die or chaser.

The wear of the corners at the tops of the thread (as at A B in Fig. 265) of a tap is greater than the wear at the bottom corners at E F, because the tops perform more cutting duty.

First, the top has a larger circle of rotation than has the bottom, and, therefore, its cutting speed is greater, to an amount equal to the difference between the circumferences of the thread at the top and at the bottom. Secondly, the tops of the teeth of

tap perform nearly all the cutting duty, because the thread in the nut is formed by the tops and sides of the tap, which on entering cut a groove which they gradually deepen, until a full thread is formed, while the bottoms of the teeth (supposing the tapping hole to be of proper diameter and not too small) simply meet the bore of the tapping hole as the thread is finished. If, as in the case of hot punched nuts, the nut bore contains scale, this scale is about removed by the time the bottoms of the top teeth come into action, hence the teeth bottoms are less affected by the hardness of the scale.

In the case of the teeth on dies and chasers, the wear at the corners C D, in Fig. 266, is the greatest. Now, the tops of the teeth on the tap (A B, in Fig. 265) cut the bottom or full diameter of the thread in the nut, while the tops of the teeth (C D, in Fig. 266) in the die cut the bottom of the thread on the bolt; hence the rounded corners cut on the work by the tops of the teeth in the one case, meet the more square corners left by the tops of the teeth in the other, and providing that under these circumstances the thread in the nut were of equal diameter to that on the bolt the latter would not enter the former.

If the bolt were made of a diameter to enable the nut to wind a close fit upon the bolt, the corners only of the threads would fit, as shown in Fig. 267, which represents at N a thread in a portion of a nut and at S a portion of a thread upon a tap or bolt, the two threads being magnified and shown slightly apart for clearness of illustration. The corners A, B of the nut are then cut by the corners A B of the tap in Fig. 265, and the corners C, D correspond

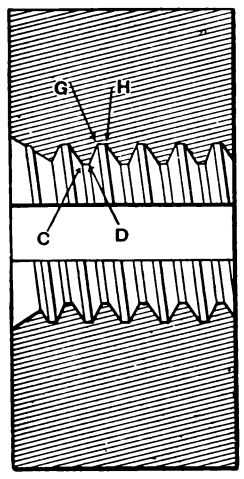

Fig. 266.

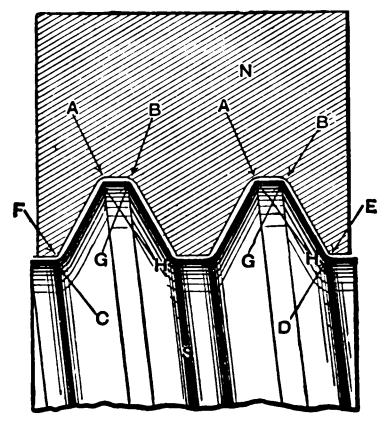

Fig. 267.

to those cut by the corners C, D of the die teeth in Fig. 266; corners E, F, Fig. 267, are cut by corners C, D, in Fig. 266, and corners G, H are cut by corners G, H in Fig. 266, and it is obvious that the roundness of the corners A, B, C, and D in Fig. 267 will not permit the tops of the thread on the bolt to meet the bottoms of the thread in the nut, but that the threads will bear at the corners only.

So far, however, we have only considered the wear tending to round off the sharp corners of the teeth, which wear is greater in proportion as the corners are sharp, and less as they are rounded or flattened, and we have to consider the wear as affecting the diameters of the male and female thread at their tops and bottoms respectively.

Now, since the tops of the tap teeth wear the most, the diameter of the thread decreases in depth, while, since the tops of the die teeth wear most, the depth of the thread in the die also decreases. The tops of the tap teeth cut the bottom of the thread in the nut and the tops of the die teeth cut the bottoms of the thread upon the bolt.

Let it be supposed then that the points of the teeth of a tap have worn off to a depth of the 1-2000th part of an inch, which they will by the time they become sufficiently dulled to require resharpening, and that the teeth of a die have become reduced by wear by the same amount, and the result will be the production of threads such as shown in Fig. 268, in which the diameter of the bolt is supposed to be an inch, and the proper thread depth 1-10th inch. Now, the diameter at the root of the thread on the bolt will be ·802 inch in consequence of the wear, but the smallest diameter of the nut thread is ·800 inch, and hence too small to admit the male or bolt thread. Again, the full diameter of the bolt thread is 1 inch, whereas the full diameter of the nut thread is but ·998 inch, or, again, too small to admit the bolt thread. As a result, it is found in practice that any standard form of thread that makes no allowance for wear, cannot be rigidly adhered to, or if it is adhered to, the tap must be made when new above the standard diameter, causing the thread to be an

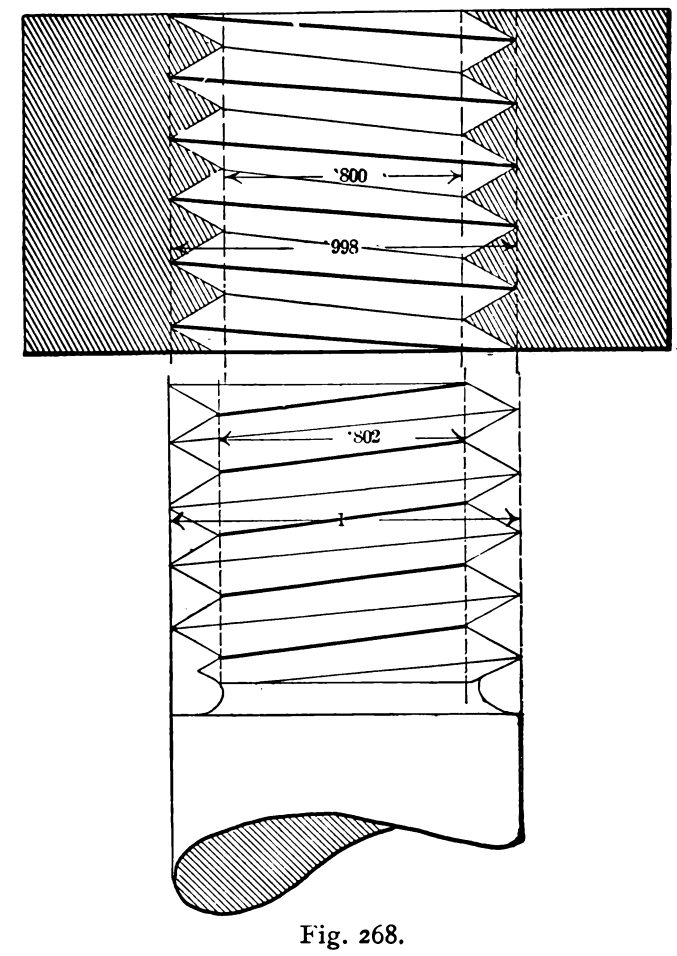

Fig. 268.

easy fit, which fit will become closer as the thread-cutting tools wear, until finally it becomes too tight altogether. The fit, however, becomes too tight at the top and bottom, where it is not required, instead of at the sides, where it should occur. When this is the case, the nuts will soon wear loose because of their small amount of bearing area.

It may be pointed out, however, that from the form in which the chasers or solid dies for bolt machines, and also that in

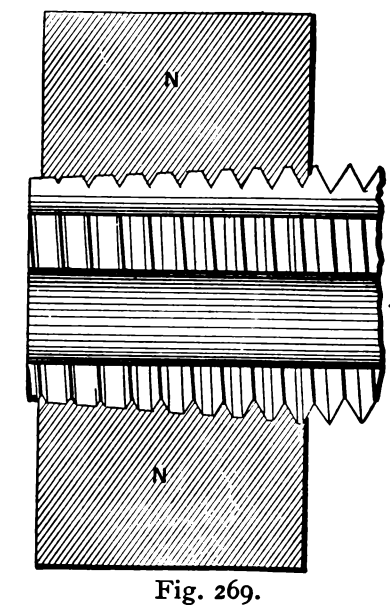

Fig. 269.

which taps are made, the finishing points of the teeth are greatly relieved of cutting duty, as is shown in Figs. 269 and 270. In the die the first two or three threads are chamfered off, while in the tap the thread is tapered off for a length usually equal to about two or three times the diameter for taps to be used by hand, and six or seven times the diameter for taps to be used in a machine. The wear of the die is, therefore, more than that of the tap, because the amount of cutting duty to produce a given

length of thread is obviously the same, whether the thread be an internal or an external one, and the die has less cutting edges to perform this duty than the tap has. The main part of the cutting is, it is true, in both cases borne by the beveled surfaces at the top of the chamfered teeth of the cutting tools, but the fact remains that the depth of the thread is finished by the extreme tops of the teeth, and these, therefore, must in time suffer from the consequent wear, while the bottoms of the teeth perform no cutting duty, providing that the hole in the one case and the bolt in the other are of just sufficient diameter to permit of a full thread being formed, as should be the case. In threads cut by chasers

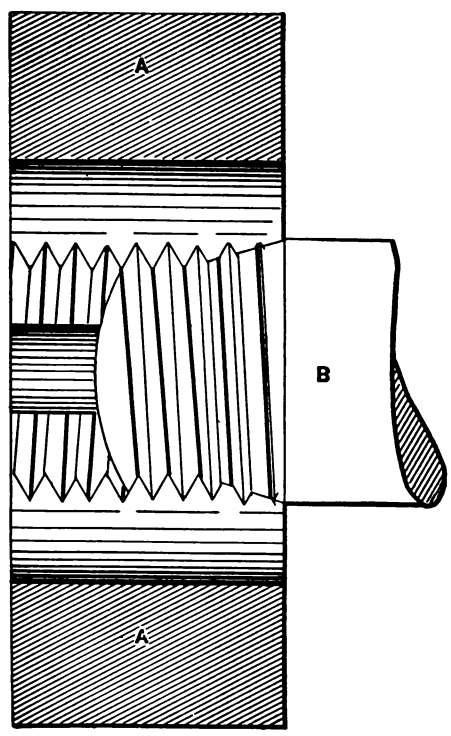

Fig. 270.

the same thing occurs; thus in Fig. 271 is shown at A a chaser having full teeth, as it must have when a full thread is to pass up to a shoulder, as up to the head of a bolt. Here the first tooth takes the whole depth of the cut, but if from wear this point becomes rounded, the next tooth may remedy the defect. When, however, a chaser is to be used upon a thread that terminates in a stem of smaller diameter, as C in Fig. 271, then the chaser may have its teeth bevelled off, as is shown on B.

The evils thus pointed out as attending the wear of screw-cutting tools for bolts and nuts, may be overcome by a slight

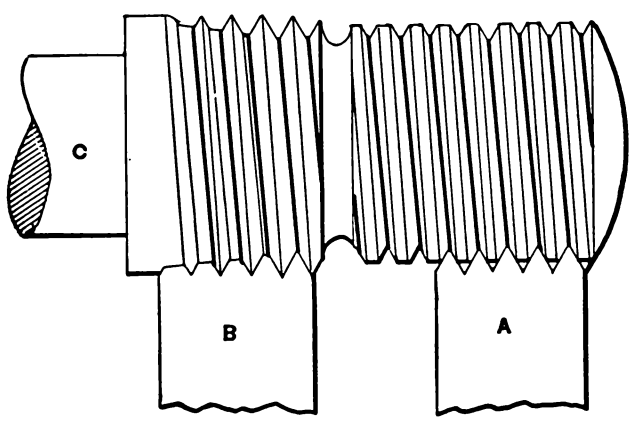

Fig. 271.

variation in the form of the thread. Thus in Fig. 272, at A is shown a form of thread for the tools to cut internal threads, and at B a form of thread for dies to cut external threads. The sides of the thread are in both cases at the same angle, as say, 60°. The depth of the thread, supposing the angle of the sides to meet in a point, is divided off into 11, or any number of equal divisions. For a tap one of these divisions is taken off, forming a flat top, while at the bottom two of these divisions are taken off, or if desirable, 1½ divisions may be taken off, since the exact amount is not of primary importance. On the external thread cutting tool B, as say a solid die, two divisions are taken off at the largest diameter, and one at the smallest diameter, or, if any other proportion be selected for the tap, the same proportion may be selected for the die, so long as the least is taken off the largest diameter of the tap thread, and of the smallest diameter of the die thread.

The diameter of the tap may still be standard to ring or collar gauge, as in the Franklin Institute thread, the angle at the sides being simply carried in a less distance. In the die the largest

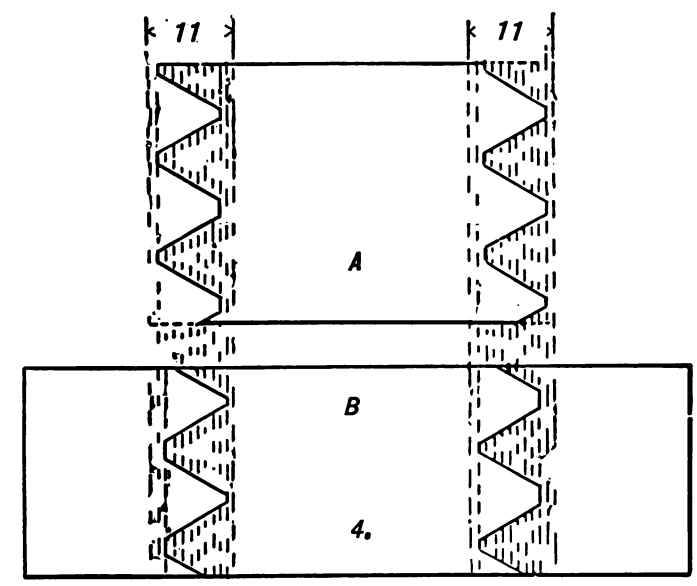

Fig. 272.

diameter of the thread has a flat equal to that on the bottom of the tap, while the smallest diameter has a flat equal to that on the tops of the tap teeth, the width or thickness of the threads remaining the same as in the Franklin Institute thread at each corresponding diameter in its depth.

The effect is to give to the threads on the work a certain amount of clearance at the top and bottom of the thread, leaving the angles just the same as before, and insuring that the contact shall be at the sides, as shown in Fig. 273.

This form of thread retains the valuable features of the Franklin Institute that it can be originated by any one, and that it can be formed with a single-toothed or single-pointed tool. Furthermore, the wear of the threading tools will not impair the diametral fit of the work, while the permissible limit of error in diameter will be increased.

By this means great accuracy in the diameters of the threads is rendered unnecessary, and the wear of the screw-cutting tools at their corners is rendered harmless, nor can any confusion occur, because the tools for external threads cannot be employed upon internal ones. The sides only of the thread will fit, and the whole contact and pressure of the fit will be on those sides only.

This is an important advantage, because if the tops of the

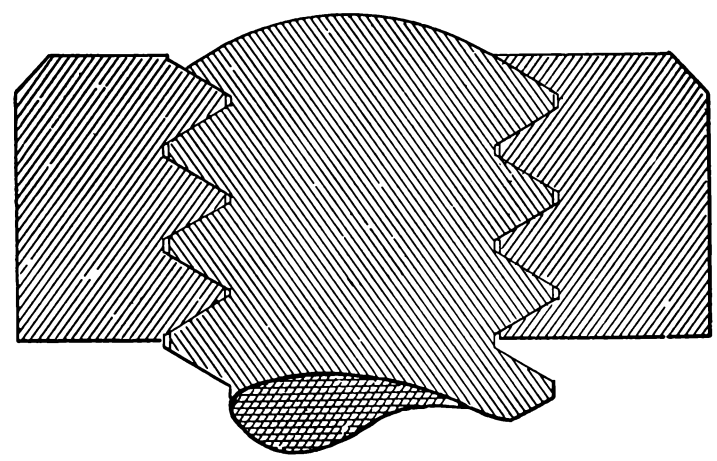

Fig. 273.

thread are from the wear of the dies and taps of too large or small diameter, respectively, the threads cannot fit on the sides. Thus, suppose a bolt thread to be loose at the sides, but to be 1-1000 of an inch larger in diameter than the nut thread, then it cannot be screwed home until that amount has been worn or forced off the thread diameter, or has been bruised down by contact with the nut thread, and it would apparently be a tight fit at the

sides. Suppose a thread to have been cut in the lathe to the correct diameter at the bottom of the thread, the sides of the thread being at the correct angle, but let the diameter at the top of the thread (a Franklin Institute thread is here referred to), be 1-1000 too large, then the nut cannot be forced on until that 1-1000 is removed by some means or other, unless the nut thread be deepened to correspond.

Now take this last bolt and turn the 1-1000 inch off, and it will fit, turn off another 1-1000 or 1-64 inch, and it will still fit, and the fit will remain so nearly the same with the 1-64 inch off that the difference can scarcely be found. Furthermore, with a nut of a fit requiring a given amount of force to screw it upon the bolt, the area of contact will be much greater when that contact is on the sides than when it is upon the tops and bottoms of the thread, while the contact will be in a direction better to serve as an abutment to the thrust or strain.

In very fine pitches of thread such as are used in the manufacture of watches, this plan of easing or keeping free the extremities of the thread is found to be essential, and there appears every probability that its adoption would obviate the necessity of using check nuts.

It has been observed that the threads upon tools alter in pitch from the hardening operation, and this is an objection to the employment of chasers cut from hobs.

Suppose, for instance, that a nut is produced having a thread of true and uniform pitch, then after hardening, the pitch may be no longer correct. The chasers cut from the hob will contain the error of pitch existing in the hob, and upon being hardened may have added to it errors of its own. If this chaser be used to produce a new hob, the latter will contain the errors in the chaser added to whatever error it may itself obtain in the hardening. The errors may not, it is true, all exist in one direction, and those of one hardening may affect or correct those caused by another hardening, but this is not necessarily the case, and it is therefore preferable to employ a form of thread that can be cut by a tool ground to correct shape after having been hardened, as is the case with the V-thread and the United States standard.

It is obvious that in originating either the sharp V or the United States standard thread, the first requisite is to obtain a correct angle of 60°, which has been done in a very ingenious manner by Mr. J. H. Heyer for the Pratt and Whitney Company,

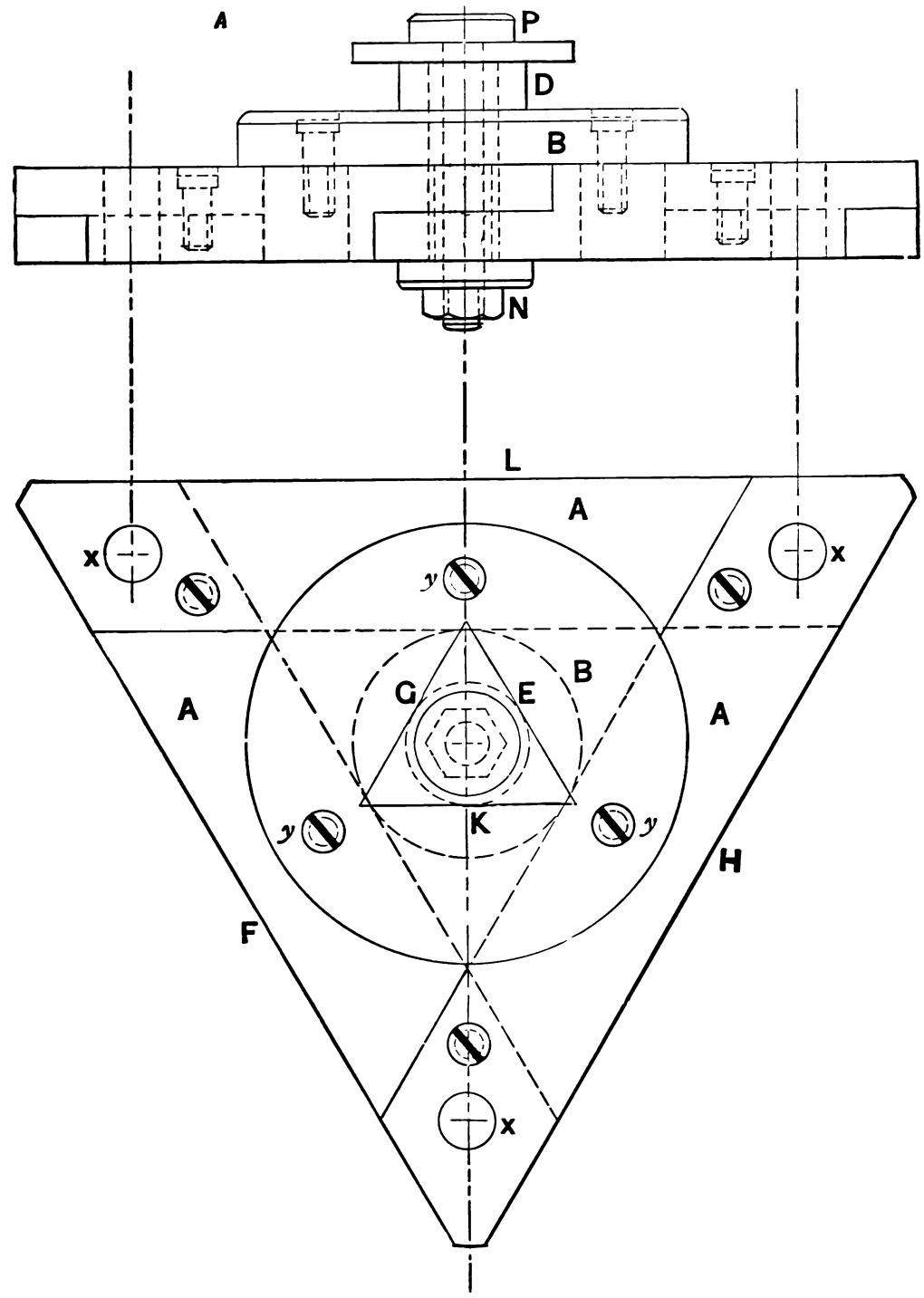

Fig. 274.

the method being as follows. Fig. 274 is a face and an end view of an equilateral triangle employed as a guide in making standard triangles, and constructed as follows:—Three bars, A, A, A, of steel were made parallel and of exactly equal dimensions. Holes X were then pierced central in the width of each bar and the same distance apart in each bar; the method of insuring accuracy in this respect being shown in Figs. 275 and 276, in which S represents the live spindle of a lathe with its face-plate on and a plug, C, fitted into the live centre hole. The end of this plug is turned cylindrically true, and upon it is closely fitted a bush, the plug obviously holding the bush true by its hole. A rectangular piece *e* is provided with a slot closely fitting to the bush.

The rectangular piece *e* is then bolted to the lathe face-plate

and pierced with a hole, which from this method of chucking will be exactly central to its slot, and at a right angle to its base. The bush is now dispensed with and the piece *e* is chucked with its base against the face-plate and the hole pierced as above, closely fitting to the pin on the end of the plug *c*, which, therefore, holds *e* true.

The bars A are then chucked one at a time in the piece *e* (the outer end resting upon a parallel piece *f*), and a hole is pierced near one end, this hole being from this method of chucking exactly central to the width of the bar A, and at a right angle to its face.

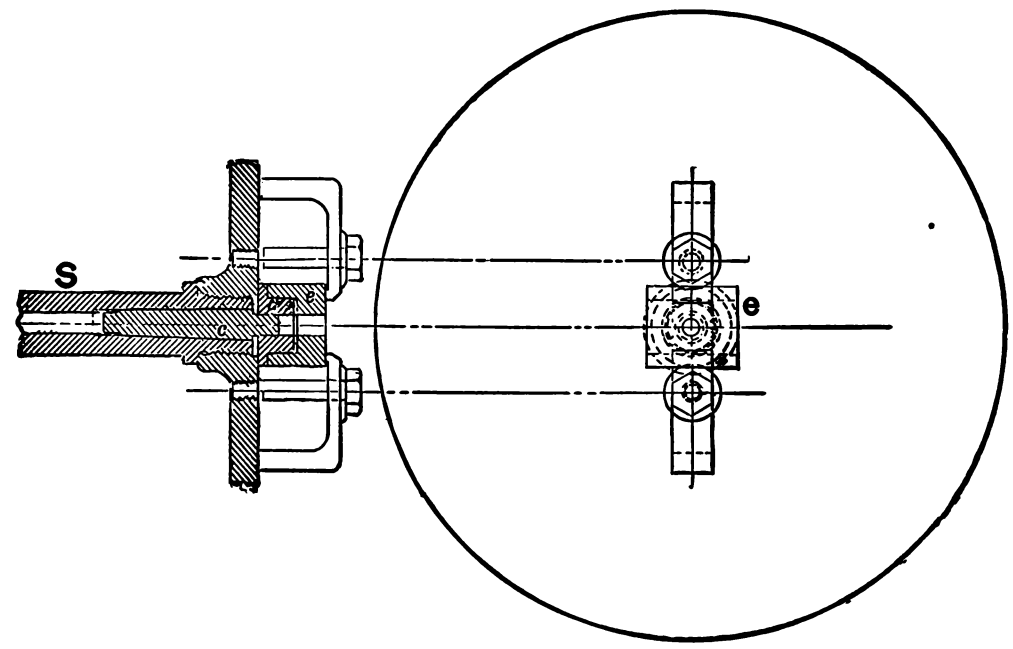

Fig. 275.

The parallel piece *f* is then provided with a pin closely fitting the hole thus pierced in the bar. The bars were turned end for end with the hole enveloping the pin in *f* (the latter being firmly fixed to the face-plate), and the other end laid in the slot in *e*, while the second hole was pierced. The holes (X, Fig. 274) must be, from this method of chucking, exactly an equal distance apart on each bar. The bars were then let together at their ends, each being cut half-way through and closely fitting pins inserted in the holes X, thus producing an equilateral triangle entirely by machine work, and therefore as correct as it can possibly be made, and this triangle is kept as a standard gauge whereby others for shop use may be made by the following process :—

Into the interior walls of this triangle there is fitted a cylindrical bush B, it being obvious that this bush is held axially true or central to the triangle, and it is secured in place by screws *y*, *y*, *y*, passing through its flange and into bars A.

At one end of the bush B, is a cylindrical part D, whose diameter is 2 inches or equal to the length of one side of an equilateral triangle circumscribed about a circle whose diameter is 1·1547 inches, as shown in Fig. 278 and through this bush B passes a pin P, having a nut N. A small triangle is then roughed out, and its bore fitting to the stem of pin P, and by means of nut N, the small triangle is gripped between the under face of D and the head of P. The large triangle is then held to an angle-plate upon a machine while resting upon the machine-table, and the uppermost edge of the small triangle is dressed down level with the cylindrical stem D, which thus serves as a gauge to determine how much to take off each edge of the small triangle to bring it to correct dimensions.

The truth of the angles of the small triangle depends, of course, also upon the large one; thus with face H resting upon the machine-table, face G is cut down level with stem D; with face, F upon the table, face E is cut down level with D; and with face L upon the table, face K is dressed down level with D. And we have a true equilateral triangle produced by a very ingenious system of chuckings, each of which may be known to be true.

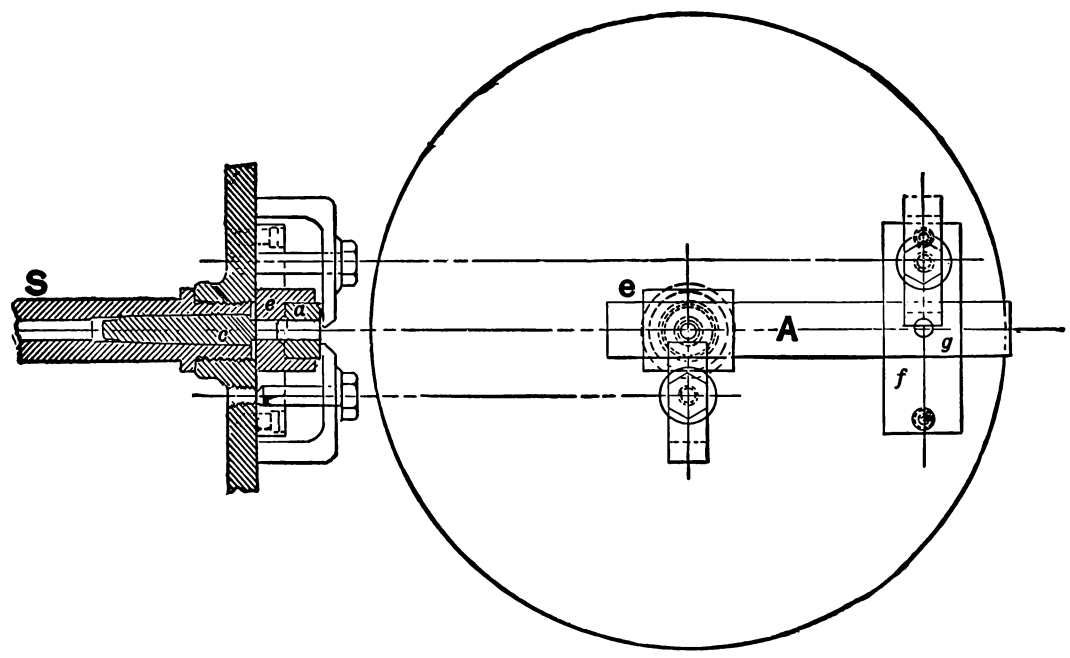

Fig. 276.

The next operation is to cut upon the small triangle the flat representing the top and bottom of the United States standard thread, which is done by cutting off one-eighth part of its vertical height, and it then becomes a test piece or standard gauge of the form of thread. The next step is to provide a micrometer by means of which tools for various pitches may be tested both for angle and for width of flat, and this is accomplished as follows :—

In Fig. 278 F is a jaw fixed by a set screw to the bar of the micrometer, and E is a sliding jaw; these two jaws being fitted to the edges of the triangle or test piece T in the figure which

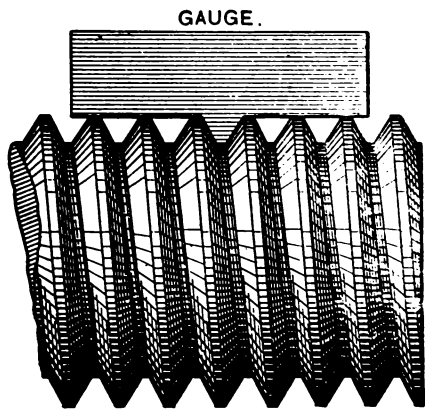

Fig. 279.

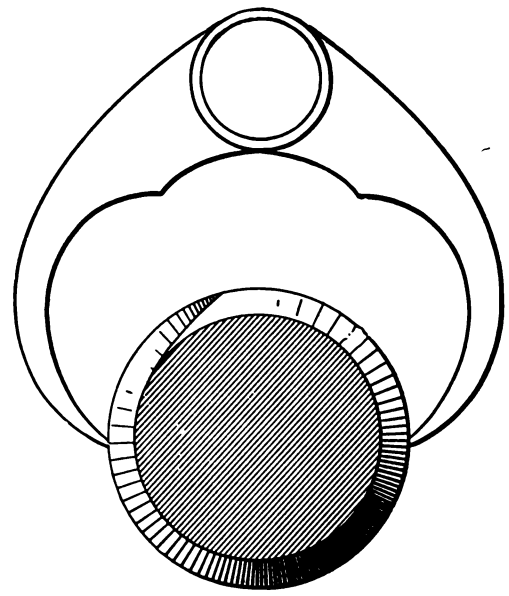

Fig. 280.

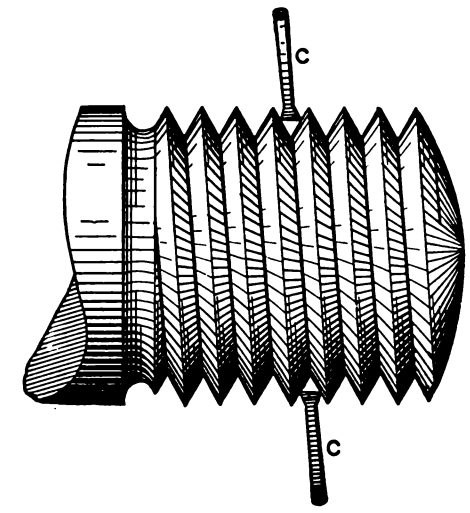

Fig. 281.

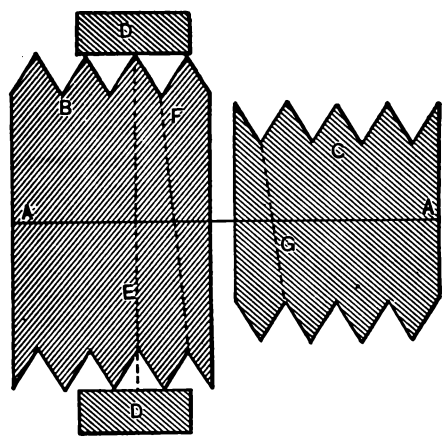

Fig. 282.

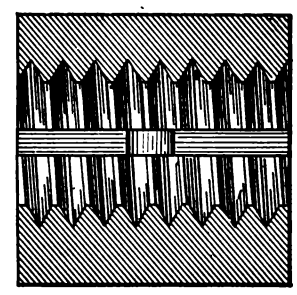

Fig. 285.

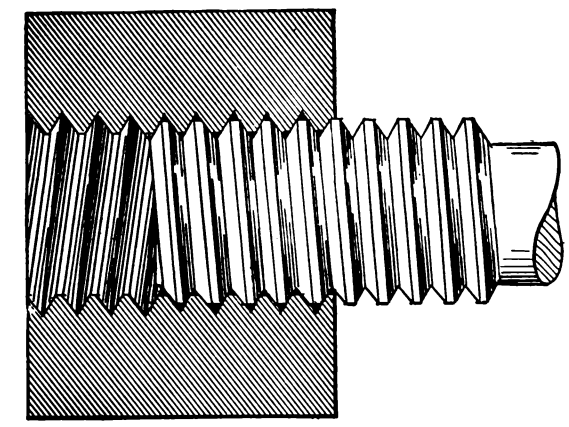

Fig. 286.

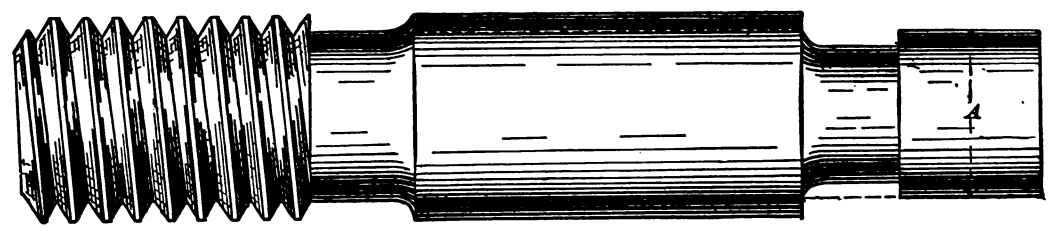

Fig. 283.

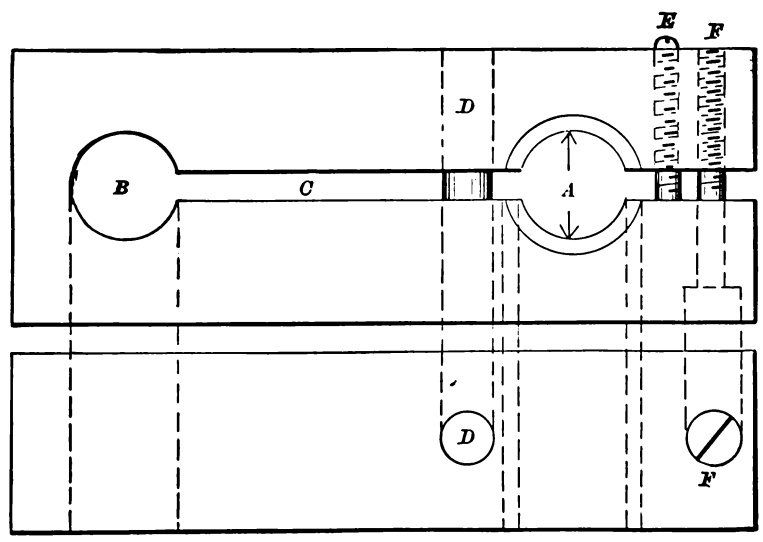

Fig. 284.

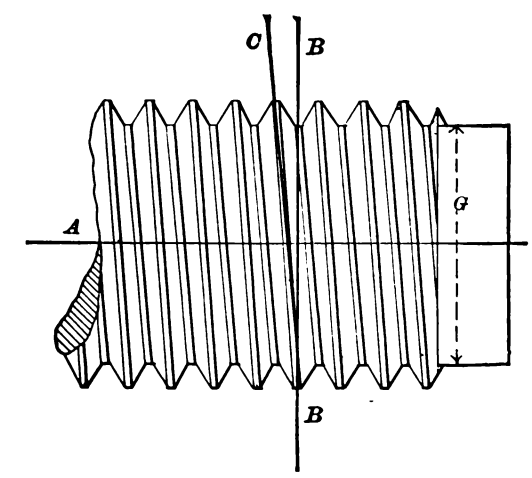

Fig. 287.

has been made as already described. To the sliding jaw E is attached the micrometer screw C, which has a pitch of 40 threads per inch; the drum A upon the screw has its circumference divided into 250 equidistant divisions, hence if the drum be moved through a space equal to one of these divisions the sliding jaw E will be moved the 1-250th part of 1-40th of an inch, or in other words the 1-10,000th of an inch. To properly adjust the position of the zero piece or pointer, the test piece T is placed in the position shown in Fig. 278, and when the jaws were so adjusted that light was excluded from the three edges of the test piece, the pointer R, Fig. 277, was set opposite to the zero mark on the drum and fastened.

To set the instrument for any required pitch of thread of the United States standard form the micrometer is used to move the sliding jaw E away from the fixed jaw F to an amount equal to the width of flat upon the top and bottom of the required thread,

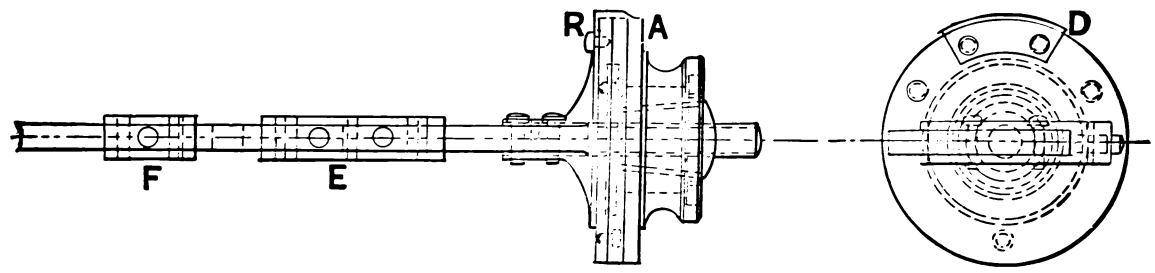

Fig. 277.

while for the sharp V-thread the jaws are simply closed. The gauge being set the tool is ground to the gauge.

Referring to the third requirement, that the tools shall in the case of lathe work be easily sharpened and set to correct position in the lathe, it will be treated in connection with cutting screws in the lathe. Referring to the fourth requirement, that a minimum of measuring and gauging shall be required to test the diameter and form of thread, it is to be observed that in a Whitworth thread the angle and depth of the thread is determined by the chaser, which may be constantly ground to resharpen without altering the angles or depth of the thread, hence in cutting the tooth the full diameter of the thread is all that needs to be gauged or measured. In cutting a sharp V-thread, however, the thread top is apt to project (from the action of the single-

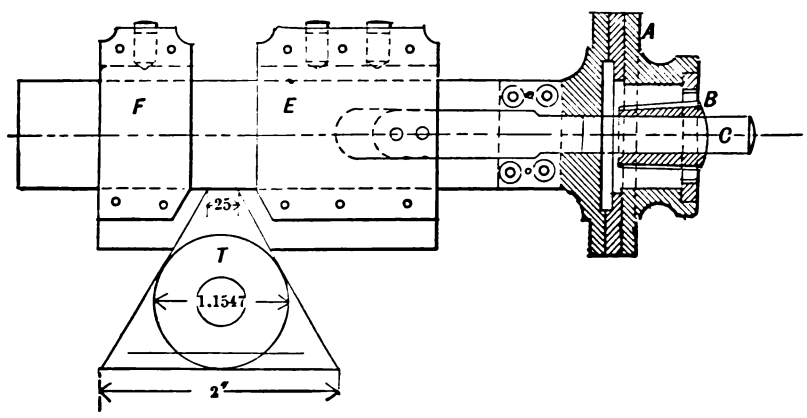

Fig. 278.

pointed tool) slightly above the natural diameter of the work, producing a feather edge which it becomes necessary to file off to gauge the full diameter of the thread. In originating a sharp V-thread it is necessary first to grind the tool to correct angle; second, to set it at the correct height in the latter, and with the tool angles at the proper angle with the work (as is explained with reference to thread cutting in the lathe) and to gauge the thread to the proper diameter. In the absence of a standard cylindrical gauge or piece to measure from, a sheet metal gauge, such as in Fig. 279, may be applied to the thread; such gauges are, however, difficult to correctly produce.

So far as the diameter of a thread is concerned it may be measured by calipers applied between the threads as in Figs. 280 and 281, a plan that is commonly practised in the workshop when there is at hand a standard thread or gauge known to be of proper diameter; and this method of measuring may be used upon any form of thread, but if it is required to test the form of the thread, as may occur when its form depends upon the workman's accuracy in producing the single-pointed threading tools, then, in the case of the United States standard thread, the top, the bottom, and the angle must be tested. The top of the thread may (for all threads) be readily measured, but the bottom is quite difficult to measure unless there is some standard to refer it to, to obtain its proper diameter, because the gauge or calipers applied to the bottom of the thread do not stand at a right angle to the axis of the bolt on which the thread is cut, but at an angle equal to the pitch of the thread, as shown in Fig. 282.

Now, the same pitch of thread is necessarily used in mechanical manipulation upon work of widely varying diameters, and as the angle of the calipers upon the same pitch of thread would vary (decreasing as the diameter of the thread increases), the diameter measured at the bottom of the thread would bear a constantly varying proportion to the diameter measured across the tops of the thread at a right angle to the axial line of the work. Thus in Fig. 282, A A is the axial line of two threaded pieces, B, C. D, D represents a gauge applied to B, its width covering the tops of two threads and measuring the diameter at a right angle to A A, as denoted by the dotted line E. The dotted line F represents the measurement at the bottom of the thread standing at an angle to E equal to half the pitch. The dotted line G is the measurement of C at the bottom of the thread.

Now suppose the diameter of B to be $1\frac{1}{2}$ inches at the top of the thread, and $1\frac{1}{8}$ inches at the bottom, while C is $1\frac{1}{8}$ inches on the top and $\frac{3}{4}$ at the bottom of the thread, the pitches of the two threads being $\frac{1}{4}$ inch; then the angle of F to E will be $\frac{1}{8}$ inch (half the pitch) in its length of $1\frac{1}{8}$ inches. The angle of G to E will be $\frac{1}{8}$ inch (half the pitch) in $\frac{3}{4}$ (the diameter at the bottom or root of the thread).

It is obvious, then, that it is impracticable to gauge threads from their diameters at the bottom, or root.

On account of the minute exactitude necessary to produce with lathe tools threads of the sharp V and United States standard forms, the Pratt and Whitney Company manufacture thread-cutting tools which are made under a special system insuring accuracy, and provide standard gauges whereby the finished threads may be tested, and since these tools are more directly connected with the subject of lathe tools than with that of screw thread, they are illustrated in connection with such tools. It is upon the sides of threads that the contact should exist to make a fit, and the best method of testing the fit of a male and female thread is to try them together, winding them back and forth until the bright marks of contact show. Giving the male thread a faint tint of paint made of Venetian red mixed with lubricating oil, will cause the bearing of the threads to show very plainly.

Figs. 283 and 284 represent standard reference gauges for the United States standard thread. Fig. 283 is the plug or male gauge. The top of the thread has, it will be observed, the standard flat, while the bottom of the thread is sharp. In the collar, or female gauge, or the template, as it may be termed, a side and a top view of which are shown in Fig. 284, and a sectional end view in Fig. 285, the flat is made on the smallest diameter of the thread, while the largest diameter is left sharp; hence, if we put the two together they will appear as in Fig. 286, there being clearance at both the tops and bottoms of the threads. This enables the diameters of the threads to be in both cases tested by standard cylindrical gauges, while it facilitates the making of the screw gauges. The male or plug gauge is made with a plain part, A, whose diameter is the standard size for the

bottoms of the threads measured at a right angle to the axis of the gauge and taking the flats into account. The female gauge or template is constructed as follows:—A rectangular piece of steel is pierced with a plain hole at B, and a standard thread hole at A, and is split through at C. At D is a pin to prevent the two jaws from springing, this being an important element of the construction. E is a screw threaded through one jaw and abutting against the face of the other, while at F is another screw passing through one jaw and threaded into the other, and it is evident that while by operating these two screws the size of the gauge bore A may be adjusted, yet the screws will not move and destroy the adjustment, because the pressure of one acts as a lock to the other. It is obvious that in adjusting the female gauge to size, the thread of the male gauge may be used as a standard to set it by.

To produce sheet metal templates such as was shown in Fig. 279, the following method may be employed, it being assumed that we have a threading tool correctly formed.

Suppose it is required to make a gauge for a pitch of 6 per inch, then a piece of iron of any diameter may be put in the lathe and turned up to the required diameter for the top of the thread. The end of this piece should be turned up to the proper diameter for the bottom of the thread, as at G, in Fig. 287. Now, it will be seen that the angle of the thread to the axis A of the iron is that of line C to line A, and if we require to find the angle the thread passes through in once winding around the bolt, we proceed as in Fig. 288, in which D represents the circumference

Fig. 288.

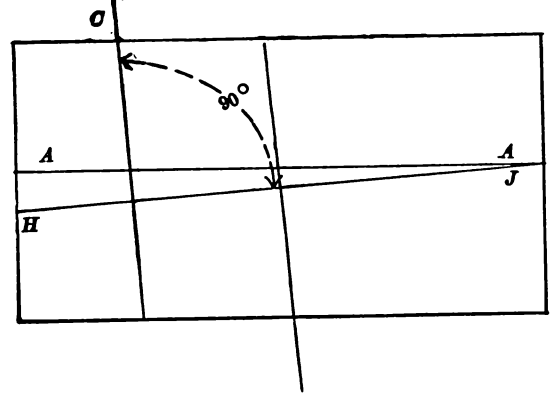

Fig. 289.

of the thread measured at a right angle to the bolt axis, as denoted by the line B in Fig. 287. F, Fig. 288 (at a right angle to D), is the pitch of the thread, and line C therefore represents the angle of the thread to the bolt axis, and corresponds to line C in Fig. 287. We now take a piece of iron whose length when turned true will equal its finished and threaded circumference, and after truing it up and leaving it a little above its required finished diameter, we put a pointed tool in the slide-rest and mark a line A A in Fig. 289, which will represent its axis. At one end of this line we mark off below A A the pitch of the thread, and then draw the line H J, its end H falling below A to an amount equal to the pitch of the thread to be cut. The piece is then put in a milling machine and a groove is cut along H J, this groove being to receive a tightly-fitting piece of sheet metal of which a thread gauge is to be made. This piece of sheet metal must be firmly secured in the groove by set-screws. The piece of iron is then again put in the lathe and its diameter finished to that of the required diameter of thread. Its two ends are then turned down to the required diameter for the bottom of the thread, leaving in the middle a section on which a full thread can be cut, as in Fig. 290, in which F F represents the sheet metal for the gauge. After the thread is cut, as in Fig. 290, we take out the gauge and it will appear as in Fig. 291, and all that is necessary is to file off the two outside teeth if only one tooth is wanted.

The philosophy of this process is that we have set the gauge at an angle of 90°, or a right angle to the thread, as is shown in Fig. 289, the line C representing the angle of the thread to the axis A A, and therefore corresponding to the line C in Fig. 287. A gauge made in this way will serve as a test of its own correctness for the following reasons: Taking the middle tooth in Fig. 291, it is clear that one of its sides was cut by one angle and the other by the other angle of the tool that cut it, and as a correctly formed thread is of exactly the same shape as the space between two threads, it follows that if the gauge be applied to any part of the thread that was cut in forming it, and if it fits properly when tried, and then turned end for end and tried again, it is proof that the gauge and the thread are both correct. Suppose, for example, that the tool was correct in its shape, but was not set with its two angles equal to the line of lathe centres, and in that case the two sides of the thread will not be alike and the

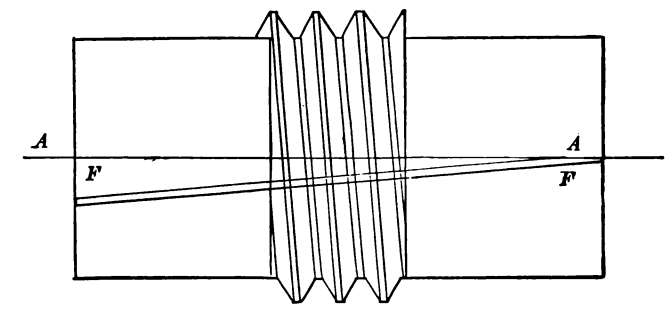

Fig. 290.

gauge will not reverse end for end and in both cases fit to the thread. Or suppose the flat on the tool point was too narrow, and the flat at the bottom of the thread will not be like that at the top, and the gauge will show it.

Referring to the fifth requirement, that the angles of the sides of the threads shall be as acute as is consistent with the required strength, it is obvious that the more acute the angles of the sides of the thread one to the other the finer the pitch and the weaker the thread, but on the other hand, the more acute the angle the better the sides of the thread will conform one to the other. The importance of this arises from the fact that on account of the alteration of pitch, already explained, as accompanying the hardening of screw-cutting tools, the sides of threads cut even by unworn tools rarely have full contact, and a nut that is a tight fit on its first passage down its bolt may generally be caused to become quite easy by running it up and down the bolt a few times. Nuts that require a severe wrench force to wind them on the bolt, may, even though they be as large as a two-inch bolt, often be made to pass easily by hand, if while upon the bolt they are hammered on their sides with a hand hammer. The action is in both cases to cause the sides of the thread to conform one to the other, which they will the more readily do in proportion as their sides are more acute. Furthermore, the more acute the angles the less the importance of gauging the threads to precise diameter, especially if the tops and bottoms of the male and female thread are clear of one another, as in Fig. 273.

Referring to the sixth requirement, that the nut shall not be unduly liable to become loose of itself in cases where it may

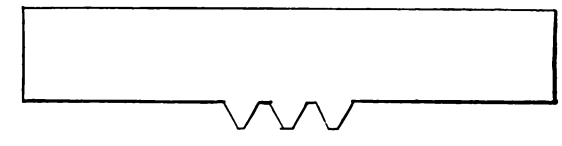

Fig. 291.

require to be fastened and loosened occasionally, it may be observed, that in such cases the threads are apt from the wear to become a loose fit, and the nuts, if under jar or vibration, are apt to turn back of themselves upon the bolt. This is best obviated by insuring a full bearing upon the whole area of the sides of the thread, and by the employment of as fine pitches as is consistent with sufficient strength, since the finer the pitch the nearer the thread stands at right angle to the bolt axis, and the less the tendency to unscrew from the pressure on the nut face.

The pitches, diameters, and widths of flat of the United States

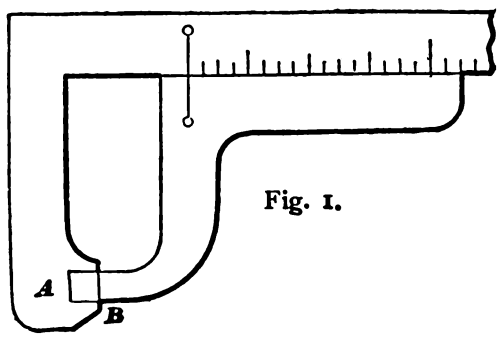

Fig. 1.

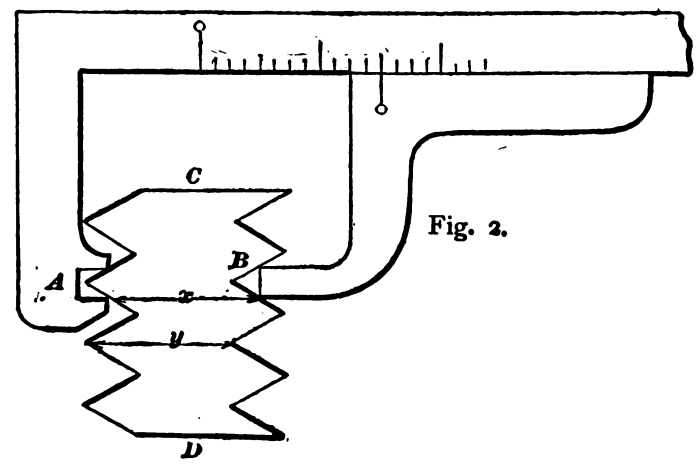

Fig. 2.

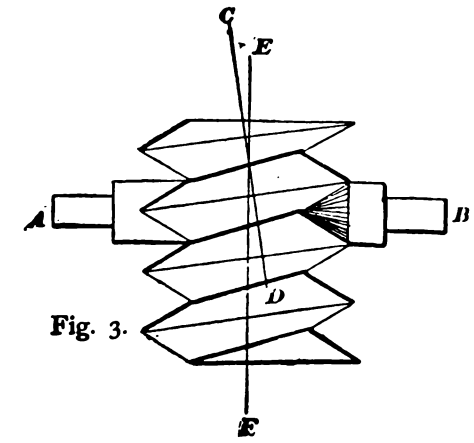

Fig. 3.

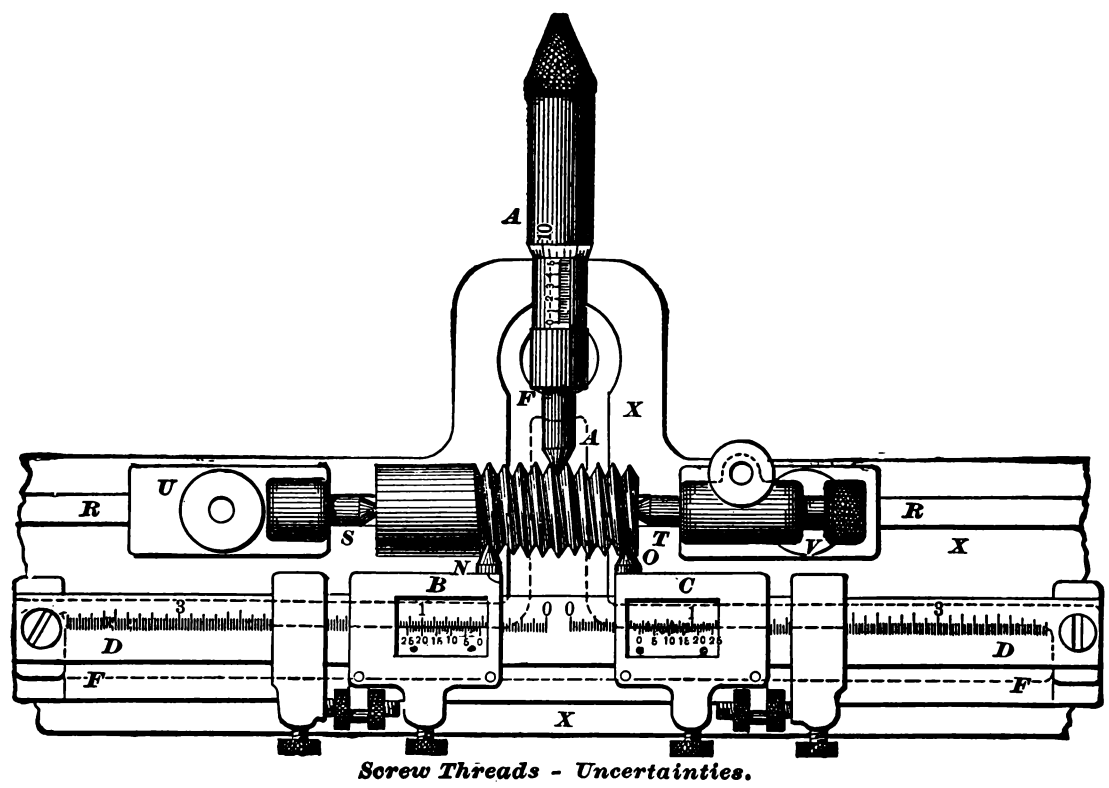

Screw Threads - Uncertainties.

Fig. 4.

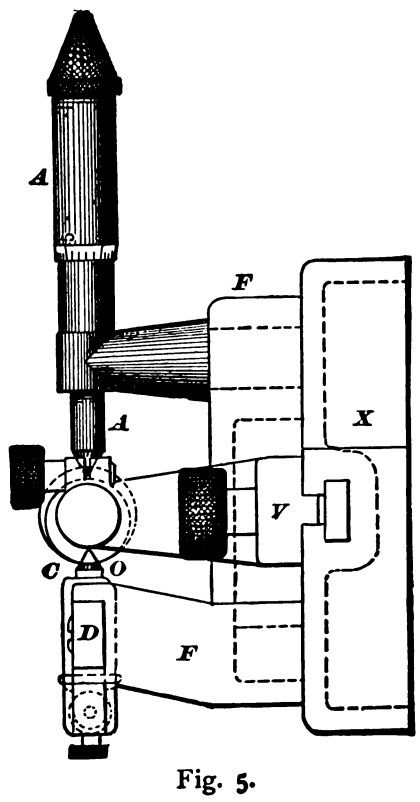

Fig. 5.

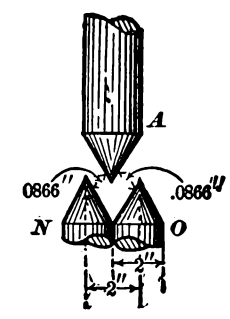

Fig. 6.

Fig. 7.

standard thread are as per the following table:—

UNITED STATES STANDARD SCREW THREADS

Diameter of Screw.	Threads per inch.	Diameter at root of Thread.	Width of Flat.
$\frac{1}{4}$	20	.1850	.0063
$\frac{5}{16}$	18	.2403	.0069
$\frac{3}{8}$	16	.2938	.0078
$\frac{7}{16}$	14	.3447	.0089
$\frac{1}{2}$	13	.4001	.0096
$\frac{9}{16}$	12	.4542	.0104
$\frac{5}{8}$	11	.5069	.0114
$\frac{3}{4}$	10	.6201	.0125
$\frac{7}{8}$	9	.7307	.0139
1	8	.8376	.0156
$1\frac{1}{8}$	7	.9394	.0179
$1\frac{1}{4}$	7	1.0644	.0179
$1\frac{3}{8}$	6	1.1585	.0208
$1\frac{1}{2}$	6	1.2835	.0208
$1\frac{5}{8}$	$5\frac{1}{2}$	1.3888	.0227
$1\frac{3}{4}$	5	1.4902	.0250
$1\frac{7}{8}$	5	1.6152	.0250
2	$4\frac{1}{2}$	1.7113	.0278

The standard pitches for the sharp V-thread are as follows:—

SIZE OF BOLT.

$\frac{1}{4}$	$\frac{5}{16}$	$\frac{3}{8}$	$\frac{7}{16}$	$\frac{1}{2}$	$\frac{5}{8}$	$\frac{3}{4}$	$\frac{7}{8}$	1	$1\frac{1}{8}$	$1\frac{1}{4}$	$1\frac{3}{8}$	$1\frac{1}{2}$	$1\frac{5}{8}$	$1\frac{3}{4}$	$1\frac{7}{8}$	2

NUMBER OF THREADS TO INCH.

20	18	16	14	12	11	10	9	8	7	7	6	6	5	5	$4\frac{1}{2}$	$4\frac{1}{2}$

The United States standard thread for steam, gas, and water pipe is given below, which is taken from the Report of the Committee on Standard Pipe and Pipe Threads of the American Society of Mechanical Engineers, submitted at the Eighth Annual Meeting, held in New York, November–December, 1886.

"A longitudinal section of the tapering tube end, with the screw-thread as actually formed, is shown full-size in Fig. 291*a* for a nominal $2\frac{1}{2}$ inch tube; that is, a tube of about $2\frac{1}{2}$ inches internal diameter, and $2\frac{7}{8}$ inches actual external diameter.

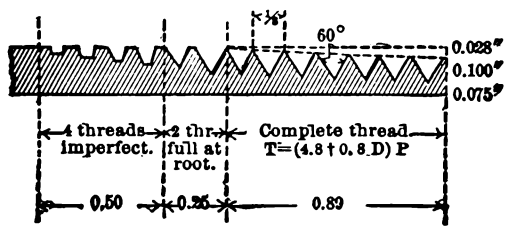

Fig. 291*a*.

"The thread employed has an angle of 60°; it is slightly rounded off both at the top and at the bottom, so that the height or depth of the thread, instead of being exactly equal to the pitch, is only four-fifths of the pitch, or equal to $0.8 \times \frac{1}{n}$ if n be the number of threads per inch. For the length of tube end throughout which the screw thread continues perfect, the empirical formula used is $(0.8\ D + 4.8) \times \frac{1}{n}$, where D is the actual external diameter of the tube throughout the parallel length, and is expressed in inches. Farther back, beyond the perfect threads, come two having the same taper at the bottom, but imperfect at the top. The remaining imperfect portion of the screw thread, farthest back from the extremity of the tube, is not essential in any way to this system of joint; and its imperfection is simply incidental to the process of cutting the thread at a single operation.

"The standard thicknesses of the pipes and pitches of thread are as follows:

STANDARD DIMENSIONS OF WROUGHT IRON WELDED TUBES.

DIAMETER OF TUBE.			THICKNESS OF METAL.	SCREWED ENDS.	
Nominal Inside.	Actual Inside.	Actual Outside.		Number of Threads per Inch.	Length of Perfect Screw.
Inches.	Inches.	Inches.	Inch.	No.	Inch.
$\frac{1}{8}$	0.270	0.405	0.068	27	0.19
$\frac{1}{4}$	0.364	0.540	0 088	18	0.29
$\frac{3}{8}$	0.494	0.675	0.091	18	0.30
$\frac{1}{2}$	0.623	0.840	0.109	14	0.39
$\frac{3}{4}$	0.824	1.050	0.113	14	0.40
1	1.048	1.315	0.134	$11\frac{1}{2}$	0.51
$1\frac{1}{4}$	1.380	1.660	0.140	$11\frac{1}{2}$	0.54
$1\frac{1}{2}$	1.610	1.900	0.145	$11\frac{1}{2}$	0.55
2	2.067	2.375	0.154	$11\frac{1}{2}$	0.58
$2\frac{1}{2}$	2.468	2.875	0.204	8	0.89
3	3.067	3.500	0.217	8	0.95
$3\frac{1}{2}$	3.548	4.000	0.226	8	1.00
4	4.026	4.500	0.237	8	1.05
$4\frac{1}{2}$	4.508	5.000	0.246	8	1.10
5	5.045	5.563	0.259	8	1.16
6	6.065	6.625	0.280	8	1.26
7	7.023	7.625	0.301	8	1.36
8	8.982	8.625	0.322	8	1.46
9	9.000	9.688	0.344	8	1.57
10	10.019	10.750	0.366	8	1.68

"The taper of the threads is $\frac{1}{16}$ inch in diameter for each inch of length, or $\frac{3}{4}$ inch per foot."

A method of measuring thread employed by the Brown & Sharp Manufacturing Company may be described as follows, which is from an article by Mr. Oscar J. Beale:

To understand the principle of this method let us have either a vernier or a micrometer caliper, whose jaws have nibs like Fig. 1 (Plate VI.). Let the jaw A have a grooved nib, into which the nib of the jaw B exactly fits. Let the caliper indicate zero, just as the sharp corners of the two nibs touch each other, as in the figure.

Now, if the jaws are opened, as in Fig. 2 (Plate VI.), the caliper will indicate or show the distance that is now between the nib corners that touched each other, when the caliper jaws were closed, as in Fig. 1 (Plate VI.). Thus the distance X is the same as the distance between the two zero lines, the measurements indicated by the caliper.

Now place between the nibs a thin mid-section, C D, of a sharp single-thread screw.

A thread A comes exactly opposite a space B in any screw having an odd number of threads, as one thread, three threads, five threads, and so on.

Let the corners of the jaw nib B touch the sides of a space, and let the corners of the nib A touch the sides of a thread opposite this space. A little consideration will show that the distance Y from the top of the thread to the bottom of the opposite space is equal to the distance X. That is, our caliper shows what would be the distance from the top of a sharp thread across to the bottom of a sharp space. This principle enables us to measure the diameter of an angular thread screw by the sides of its thread.

If the thread be a sharp one, the measurement, indicated by the caliper, will be equal to the depth of the thread, as at B, Fig. 3 (Plate VI.), less than the diameter of the screw. That is, if we subtract the depth of the sharp thread from the diameter of the screw, we shall have for a remainder the distance measured by the caliper.

For the common, sharp, sixty-degree thread, tne depth is equal to .866″ divided by the number of threads to one inch. That is, the depth of a one-inch pitch thread is .866″. For a screw one inch diameter, ten threads to an inch, the depth is one-tenth of .866″ or .087″ nearly, and the measurement of the thread, as in

Fig. 2, is the remainder after subtracting .087″ from 1″, which is .913″.

Letting D equal the diameter of the screw, letting n equal the number of the threads to one inch, letting y equal the distance measured by the caliper, and the rule for the depth of a sharp sixty-degree thread can be given by the formula $y = D - \frac{.866}{n}$.

We can also measure the diameter of a screw having the United States standard thread, and also screws having threads of any angle, if we make the right allowance for the depth. The angle of the United States standard thread is sixty degrees, but, considered by its sides, it is only seven-eighths of the depth of a sharp thread, because one-eighth of the pitch of the thread is left flat at the top of the thread.

As the nibs of the caliper touch the sides of a space and also the sides of the thread opposite this space, twice one-eighth of the depth, or one-fourth of the depth of a sharp thread, must be taken out of the sharp thread depth in figuring the measurement for a United States standard thread. That is, instead of subtracting the depth of a sharp thread from the diameter of the United States screw, we subtract three-fourths of the depth. Three-fourths of .866 is .6,495, or practically .65. For the purpose, therefore, of measuring a United States thread screw, as in Fig. 2 (Plate VI.), we can subtract from the diameter of the screw, .65″ divided by the number of threads to one inch.

Example.—What size shall we set the caliper in order to measure a United States thread screw, three quarters of an inch diameter and ten threads to one inch? Dividing .65″ by 10, the number of threads to one inch, we have .065″. Subtracting .065″ from .750″, the diameter of the screw, we have .685″ as the distance X, Fig. 2, to be measured by the caliper.

The foregoing gives an idea of the principle of measuring screws by the sides of their threads. In practical use the sharp corners of the nibs A and B would soon get worn out, and then the caliper would not show the exact size.

In actual use it has been found well to have the nibs shaped like A and B, Fig. 3 (Plate VI.). The nib A has a sixty-degree groove cut through its face. This nib swivels in the caliper jaw. It is convenient to have the nib A swivel, because it will then adjust itself to the position of the thread of the screw to be measured. If this nib does not swivel, great care must be taken to hold the caliper so that the thread of the screw will go to the bottom of the nib groove. The nib B is simply a sixty degree pointed piece like the centre of a lathe. This nib is fixed in the caliper jaw.

For a United States thread the nib B should be flattened at the end, in order not to bear on the flat part at the bottom of the thread. The flat part on the end of the nib B should not be less than the flat at the bottom of the space into which the nib goes. Brown & Sharp have several calipers with different sized nibs, so as to measure screws of different pitches.

It may here be observed that there is theoretically a slight inaccuracy in measuring screws, as in Fig. 3 (Plate VI.). The nibs are supposed to bear along the sides of the screw thread, as would appear from Fig. 3 (Plate VI.), but the bearing is not quite perfect. The reason that the nibs do not quite fit the thread and space is because the thread, taken in the position that the nibs bear, is not of the same angle as the thread is when taken along the line parallel to the centre. Thus, on the line C D the thread is narrower than it is on the line E F, while the depth of the thread does not vary. Hence the thread is sharper when taken on the line C D than when taken in the usual way on the line E F. The thread will, therefore, bear only in the bottom of the groove, in the nib A, but this will make no difference in the measurement, as far as the nib A is concerned. The nib B, however, will not go quite to the bottom of the space, because the space has a sharper angle than the nib. Hence, as it is the bottom of a space that we are supposed to measure from, our measurements will not be quite exact. In practice this inaccuracy can hardly be seen.

A machine for measuring the pitches of threads is shown in Figs. 4, 5, 6, and 7 (Plate VI.), in which A. Figs. 4 and 5 (Plate VI.), is a micrometer head with a screw whose nib is pointed to an angle of sixty degrees. B and C are vernier measuring slides, which are carried upon the graduated bar D. On the vernier slides are the measuring nibs N and O, each consisting of a cylindrical body part and a pointed end, the body part being two-tenths of an inch diameter, and the pointed end having an angle of sixty degrees. The micrometer head A and the graduated bar D are fastened to the frame F, which rests upon the bed X, and is free to move. The centres S and T are carried into the adjustable stocks U and V, which are tongued into the slot R and clamped to the bed X.

To adjust the micrometer and the verniers, bring together the vernier nibs N and O and place them at an equal distance from the micrometer nib A, as in Fig. 6 (Plate VI.); place the micrometer so that between it and each of the vernier nibs the perpendicular or shortest distance will be .0866″. Now adjust the micrometer so that it will read zero, and adjust the verniers so that each will read one-tenth inch from zero. The sum of the two vernier readings is now two-tenths of an inch, which is the distance apart of the two points of the vernier nibs; each of these points is one-tenth inch distant from the point of the micrometer nib A, and .0866″, which is the perpendicular or shortest distance between a side of the micrometer nib A, a side of one of the vernier nibs, is one-tenth of the cosine of thirty degrees. When the micrometer and one of the vernier slides are each at zero, their nibs will touch at the points, as in Fig. 7 (Plate VI.).

The routine of measuring a sixty-degree sharp screw thread is about as follows:

The micrometer nib A, Fig. 4 (Plate VI.), is placed in a thread space, and the two vernier nibs N and O are placed in any two convenient spaces, one on each side of the nib A; all three nibs are then set so that they will at one time touch both sides of each of the three spaces. Then the micrometer reading shows the diameter of the thread at the bottom; the sum of the vernier readings divided by the number of threads between the nibs gives the thread pitch. Thus in Fig. 4 (Plate VI.), if the micrometer reading is 5,325, then the diameter of the thread across the bottom is .5325 inch, because the zero settings are based upon having the nibs together, as in Fig. 7 (Plate VI.). If the verniers each read nine-sixteenths inch we have one inch and an eighth as the sum of the vernier readings, which divided by nine, the number of threads between the vernier nibs, as in the figure, gives one-eighth inch as the thread pitch.

Screws having both an odd and an even number of threads or leads can be measured. To measure screws having the Franklin Institute thread, the ends of the nibs should be flattened. If the points are taken off so that the flat places will be a hundredth inch diameter, the nibs can be used to measure threads ten to an inch, and finer. The nibs can be made to take out and others put in, though if any considerable number of screws and taps are to be measured it is better to have two or more measuring tools complete.

Screw-Cutting Hand Tools.

For cutting external or male threads by hand three classes of tools are employed.

The first is the screw plate shown in Fig. 292. It consists of a

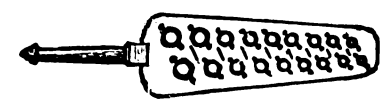

Fig. 292.

hardened steel plate containing holes of varying diameters and threaded with screw threads of different pitches. These holes are provided with two diametrally opposite notches or slots, so as to form cutting edges.

This tool is placed upon the end of the work and slowly rotated while under a hand pressure tending to force it upon the work, the teeth cutting grooves to form the thread, and advancing along the bolt at a rate determined by the pitch of the thread.

The screw plate is suitable for the softer metals, and upon

diameters of $\frac{1}{8}$ inch and less, in which the cutting duty is light; hence the holes do not so rapidly wear larger.

The second class consists of a stock and dies such as shown in Fig. 293. For each stock there are provided a set of dies having different diameters and pitches of thread.

In this class of tool the dies are opened out and placed upon the bolt. The set screw is tightened up, forcing the dies to their cut, and the stock is slowly rotated and a traverse taken down the work.

In some cases the dies are then again forced to the work by the set screw. and a cut taken by winding the stocks up the bolt,

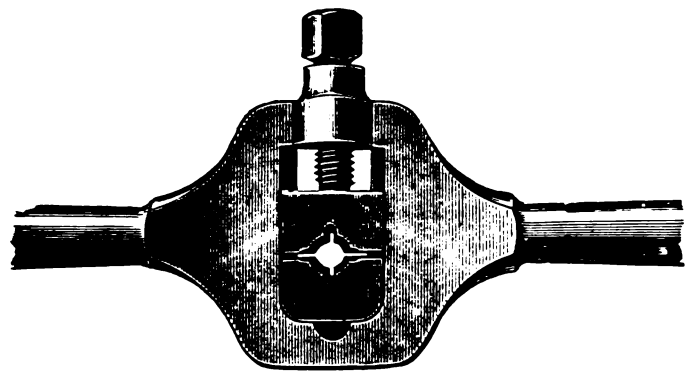

Fig 293.

the operation being continued until the thread is fully developed and cut to the required diameter. In other cases the cut is carried down the bolt, only the dies being wound back to the top of the bolt after each cut is carried down. The difference between these two operations will be shown presently.

The thread in dies which take successive cuts to form a thread may be left full clear through the die, and will thus cut a full thread close up to the head collar or shoulder of the work. It is usual, however, to chamfer off the half threads at the ends of the dies, because if left of their full *height* they are apt to break off wher in use. It is sometimes the practice, however, to

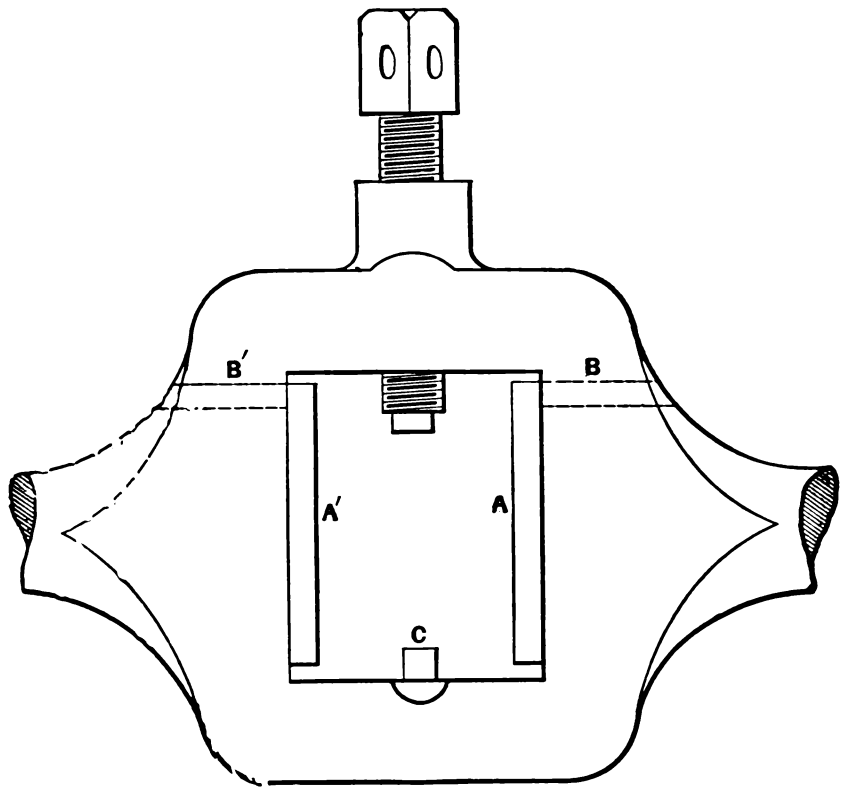

Fig. 294.

chamfer off the first two threads on one side of the dies, leaving the teeth on the other side full, and to use the chamfered as the leading side in all cases in which the thread on the work does not require to be cut up to a shoulder, but turning the dies over with the full threaded teeth as the leading ones when the thread *does* require to be carried up to a head or shoulder on the work.

To facilitate the insertion and extraction of the dies in and from their places in the stock, the Morse Twist Drill Co. employ the following construction. In Figs. 294 and 295 the pieces A, A′ which hold the dies are pivoted in the stock at B, so as to swing outward as in Fig. 295, and receive the dies which are slotted to fit them. These pieces are then swung into position in the stock. The lower die is provided with a hole to fit the pin C, hence when that die is placed home C acts as a detaining piece locking the pieces A,A′ through the medium of the bottom die.

In other dies of this class the two side pieces or levers which hold the dies are pivoted at the corner of the angle, as in Fig. 296. In the bottom of the stock is a sliding piece beveled at its top and meeting the bottom face of the levers; hence, by press-

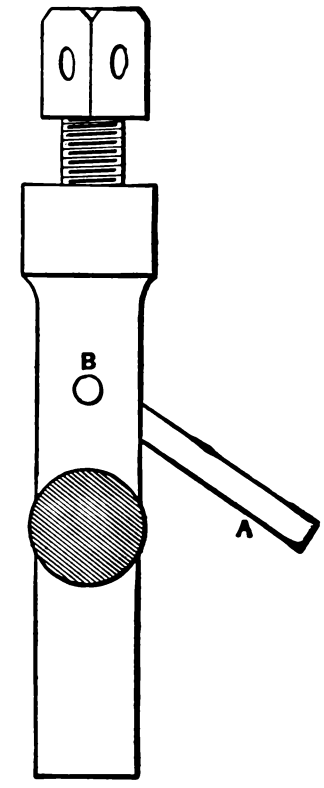

Fig. 295.

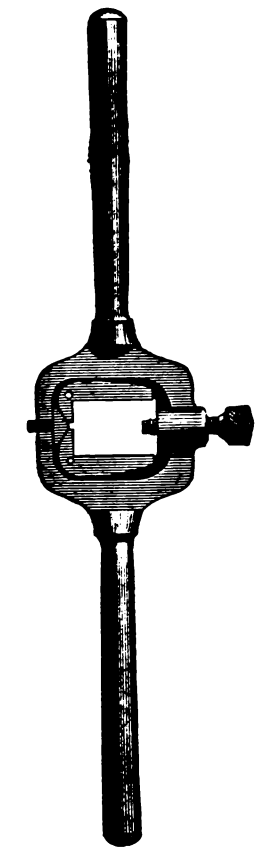

Fig. 296.

ing this piece inwards the side pieces recede into a slot provided in the stock, and leave the opening free for the dies to pass into their places, when the pin is released and a spring brings the side pieces back. Now, since the bottom die rests upon the bottom angle of the side pieces the pressure of the set screw closes the side pieces to the dies holding them firmly.

In Fig. 297 is shown Whitworth's stocks and dies, the cap

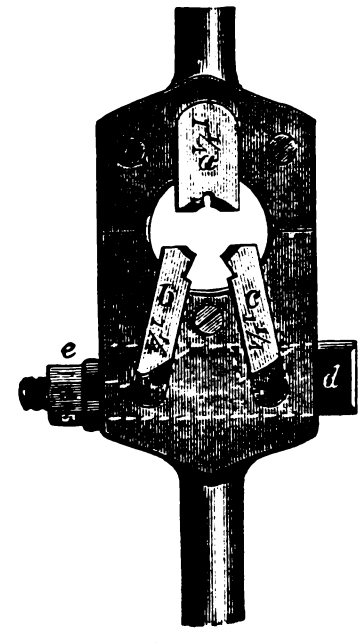

Fig. 297.

that holds the guide die *a* and the two chasers *b*,*c* in their seats or recesses in the stock being removed to expose the interior parts. The ends of the chasers *b*, *c* are beveled and abut against correspondingly beveled recesses in the key *d*, so that by operating the nut *e* on the end of the key the dies are caused to move longitudinally. The principles of action are more clearly shown in Fig. 298. The two cutting chasers B and C move in lines that would meet at D, and therefore at a point behind the centre or axis of the bolt being threaded; this has the effect of

preserving their clearance. It is obvious, for example, that when these chasers cut a thread on the work it will move over toward guide A on account of the thread on the work sinking into the threads on A, and this motion would prevent the chasers B,C from cutting if they moved in a line pointing to the centre of the work. This is more clearly shown in Fig. 299, in which the guide die A and one of the cutting dies or chasers B is shown

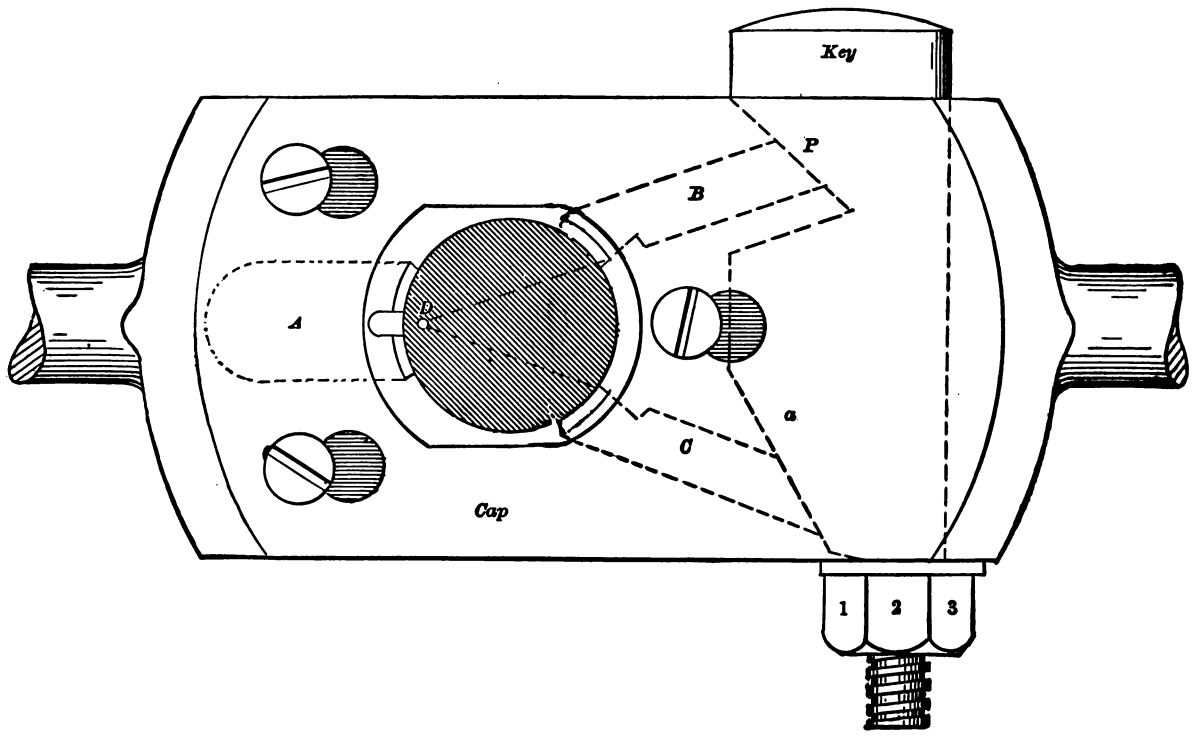

Fig. 298.

removed from the stock, while the bolt to be threaded is shown in two positions—one when the first cut is taken, and the other when the thread is finished. For the first cut the centre of the work is at E, for the last one it is at G, and this movement would, were the line of motion as denoted by the dotted lines, prevent the chaser from cutting, because, while the line of chaser motion would remain at J, pointing to the centre of work for the first cut, it would require a line at K to point to that centre for the last one; hence, when considered with relation to the work, the line of chaser motion has been moved forward, presenting the cutting edges at an angle that would prevent their cutting. By having their motion as shown in Fig. 299, however, the clearance of the chasers is preserved.

Referring now to the die A, it acts as a guide rather than as a cutting chaser, because it has virtually no clearance and cannot cut so freely as B and C; hence it offers a resistance to the moving of the bolt, or of the dies upon the bolt, in a lateral direction when the chaser teeth meet either a projection or a depression upon the work. The guide principle is, however, much more fully carried out in a design by Bodmer, which is shown in Fig. 300. Here there is but one cutting chaser C, the bush G being

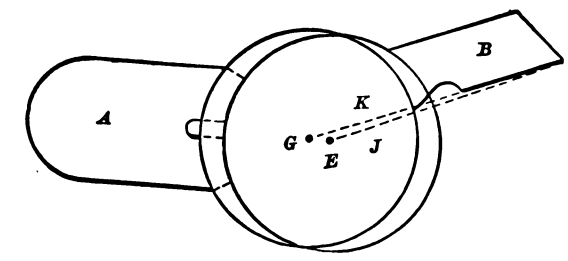

Fig. 299.

upon a piece of work. Pulling the handle E causes D to swing in the stock, thus giving the chaser clearance, as shown. When the cut is carried down, a new cut may be put on by means of E, and on winding the stock in the opposite direction, D will swing in its seat, and cant or tilt the chaser in the opposite direction, giving it the necessary clearance to enable it to cut on the upward or back traverse. Another point of advantage is that the cutting edges are not rubbed by the work during the back stroke, and their sharpness is, therefore, greatly preserved. A die of this kind will produce work almost as true as the lathe, and, in the case of long, slender work, more true than the lathe; but it is obvious that, on account of the friction caused by the pressure of the work to the guide G, the tool will require more power to operate than the ordinary stock and die or the solid die.

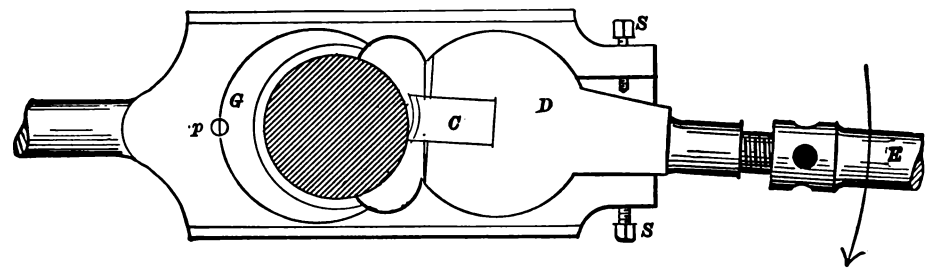

Fig. 300.

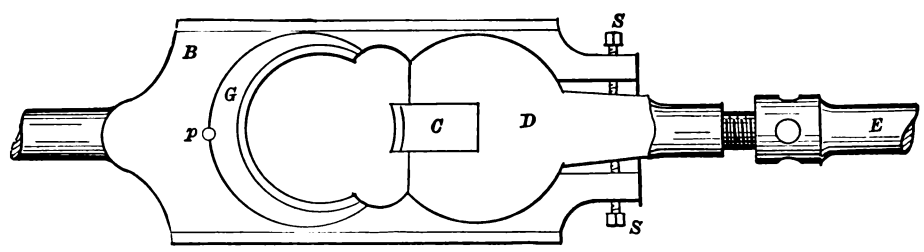

Fig. 301.

In adjustable dies which require to take more than one cut along the bolt to produce a fully developed thread, there is always a certain amount of friction between the sides of the thread in the die and the grooves being cut, because the angle of the thread at the top of a thread is less than the angle at the bottom. Thus in Fig. 302 the pitch at the top of thread (at A,B) is the same as at the bottom (C, D). Now suppose that in Fig. 303 *a b* represents

the axial line of a bolt, and *c d* a line at a right angle to *a b*. The radius *e f* being equal to the circumference of the top of the thread, the pitch being represented by *b*; then *k* represents the angle of the top of the thread to the axial line *a b*. Now suppose that the radius *e g* represents the circumference at the bottom of the thread and to the pitch; then *l* is the angle of the bottom of the thread to the axial line of the work, and the difference in angle between *k* and *l* is the difference in angle between the top

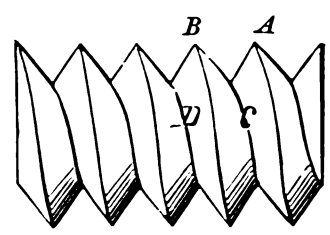

Fig. 302.

and bottom of the thread in the dies and the thread to be cut on the work.

Now the tops of the teeth on the die stand at the greatest angle *l*, in Fig. 303, when taking the first cut on the bolt, but the grooves they cut will be on the full diameter of the bolt, and will, therefore, stand at the angle *k*, hence the lengths of the teeth do not lie in the same planes as the grooves which they cut.

In cutting V-threads, however, the angle of the die threads

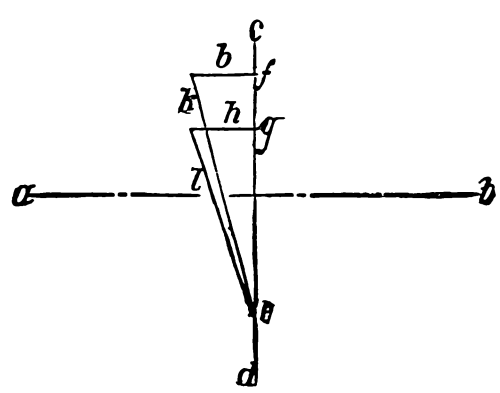

Fig. 303.

gradually right themselves with the plane of the grooves attaining their nearest coincidence when closed to finish the thread.

Since, however, the full width of groove is in a square thread cut at the first cut taken by the dies, it is obvious that a square thread cannot be cut by this class of die, because the sides of the grooves would be cut away each time the dies were closed to take another cut.

Dies of this class require to have the threaded hole made of a

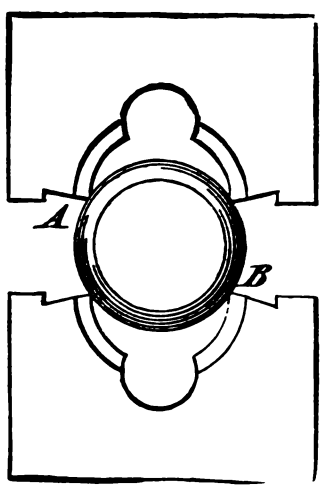

Fig. 304.

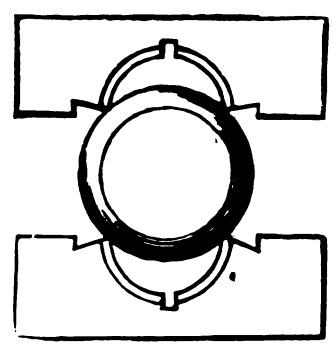

Fig. 305.

larger diameter than is the diameter of the bolt they are intended to thread, the reason being as follows:—

Suppose the threaded hole in the dies to be cut by a hob or master tap of the same diameter as the thread to be cut by the dies; when the dies are opened out and placed upon the work as in Fig. 304, the edges A, B will meet the work, and there will be nothing to steady the dies, which will, therefore, wobble and start a drunken thread, that is to say, a thread such as was shown in Fig. 253.

Instances have been known in the use of dies made in this manner, wherein the workman using a right-hand single-threaded pair of dies has cut a right or left-hand double or treble thread; the teeth of the dies acting as chasers well canted over, as shown in Fig. 305. It is necessary to this operation, however, that the

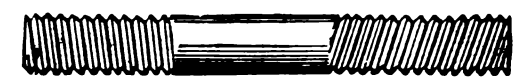

Fig. 306.

diameter of the work be larger than the size of hob the dies were threaded with.

In Fig. 306 is shown a single right-hand and a treble left-hand thread cut by the author with the same pair of dies.

All that is necessary to perform this operation is to rotate the dies from left to right to produce a right-hand thread, and from right to left for a left-hand thread, exerting a pressure to cause the dies to advance more rapidly along the bolt than is due to the pitch of the thread. A double thread is produced when the dies traverse along the work twice as fast as is due to the pitch of the thread in the dies, and so on.

It is obvious, also, that a piece of a cylindrical thread may be used to cut a left-hand external thread. Thus in Fig. 307 is shown a square piece of metal having a notch cut in on one side of it and a piece of an external thread (as a tap inserted) in the

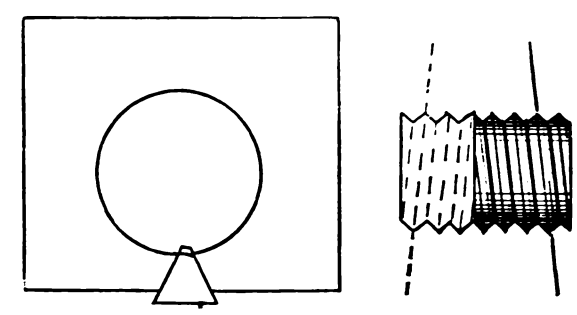

Fig. 307.

notch. By forcing a piece of cylindrical work through the hole while rotating it, the piece of tap would cut upon the work a thread of the pitch of the tap, but a left-handed thread, which occurs because, as shown by the dotted lines of the figure, the thread on one side of a bolt slopes in opposite directions to its direction on the other, and in the above operation the thread on one side is taken to cut the thread on the other.

These methods of cutting left-hand threads with right-handed ones are mentioned simply as curiosities of thread cutting, and not as being of any practical value.

To proceed, then: to avoid these difficulties it is usual to thread the dies with a hob or master tap of a diameter equal to twice the depth of the thread, larger than the size of bolt the dies are to thread. In this case the dies fit to the bolt at the first cut, as shown in Fig. 308, C, D being the cutting edges.

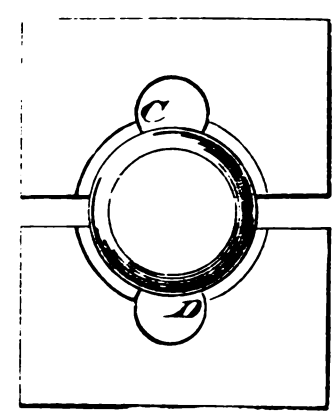

Fig. 308.

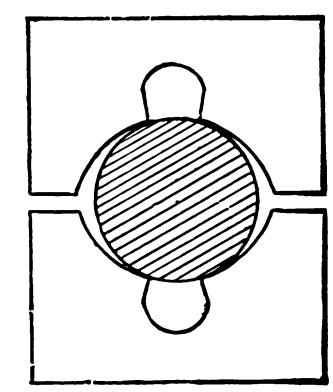

Fig. 309.

The relation of the circle of the thread in the dies to that of the work during the final cut is shown in Fig. 309.

There is yet another objection to tapping the dies with a hob of the diameter of the bolt to be threaded, in that the teeth fit perfectly to the thread of the bolt when the latter is threaded to the proper diameter, producing a great deal of friction, and being

difficult to make cut, especially when the cutting edges have become slightly dulled from use.

Referring now to taking a cut up the bolt or work as well as down, it will be noted that supposing the dies to have a right-hand thread, and to be rotating from left to right, they will be passing down the bolt and the edges C,D (Fig. 308) will be the cutting ones. But when the dies are rotated from right to left to bring them to the end of the bolt again, C,D will be rubbed by the

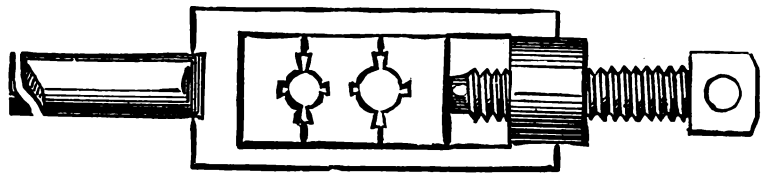

Fig. 310.

thread, which tends to abrade them and thus destroy their sharpness.

In some cases two or more pairs of dies are fitted to the same stock, as shown in Fig. 310, but this is objectionable, because it is always desirable to have the hole in the dies central to the length of the stock, so that when placed to the work the stock shall be balanced, which will render it easier to start the thread true with the axial line of the bolt.

From what has been said with reference to Fig. 303, it is obvious that a square thread cannot be cut by a die that opens and closes to take successive cuts along the work, but such threads may be cut upon work that is of sufficient strength to withstand the twisting pressure of the dies, by making a solid die, and tapering off the threads for some distance at the mouth of the die, so as to enable the die to take its bite or grip upon the work, and start itself. It is necessary, however, to give to the die as many flutes (and therefore cutting edges), as possible, or else to make flutes wide and the teeth as short as will leave them sufficiently strong, both these means serving to avoid friction.

The teeth for adjustable dies, such as shown in Fig. 293, are cut as follows:—There is inserted between the two dies a piece of

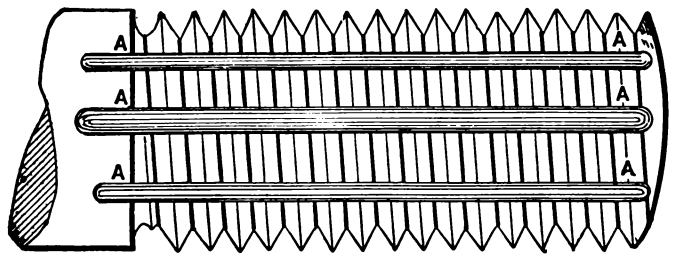

Fig. 312.

metal, separating them when set together to a distance equal to twice the depth of the thread, added to the distance the faces of the dies are to be apart when the dies are set to cut to this designated or proper diameter. The tapping hole is then drilled (with the pieces in place) to the diameter of the bolt the die is for. The form of hob used by the Morse Twist Drill & Machine Company, to cut the thread, is shown in Fig. 311. The unthreaded part at the entering end is made to a diameter equal to that of the work the dies are to be used in; the thread at the entering end is made sunk in one half the height of the full thread, and is flattened off one half the height of a full thread, so that the top of the thread is even with the diameter of the unthreaded part at the entering end. The thread then runs a straight taper up the hob until a distance equal to the diameter of the nut is reached, and the length of hob equal to its diameter is made a full and parallel thread for finishing the die teeth with. The thread on the taper part has more taper at the root of the thread than it has at the top of the same, and the diameter of the full and parallel part at the shank end of the thread is made of a diameter equal to twice the height or depth of a full thread, larger than the diameter at the entering end of the hob. The hob thus becomes a taper and relieved tap cutting a full thread at one passage through the dies. If the hob is made parallel and a full thread from end to end, as in Fig. 312, the dies must traverse up and down the hob, or the hob through the dies to form a full thread.

The third class of stock and die is intended to cut a full thread at one passage along the work, while at the same time provision is made, whereby, to take up the wear due to the abrasion of the cutting edges, which wear would cause the diameter of thread cut to be above the standard.

In Fig. 313 is shown the Grant adjustable die made by the Pratt & Whitney Company. It consists of four chasers or toothed cutting tools, inserted in radial recesses or slots in an iron disc or collet encircled by an iron ring. Each chaser is beveled at its end to fit a corresponding bevel in the ring, and is grooved on one of its side faces to receive the hardened point of a screw that is inserted in the collet to hold the chaser in its adjusted position. Four screws extend up through the central flange or body of the collet, two of which serve to draw down the ring, and by reason of the taper on the ring move the chasers equally towards the centre and reduce the cutting diameter of the die, while the other two hold the ring in the desired position, or force it upward to enlarge the cutting diameter of the die. The range of adjustment permitted by this arrangement is 1-32 inch. The dies may be taken out and ground up to sharpen.

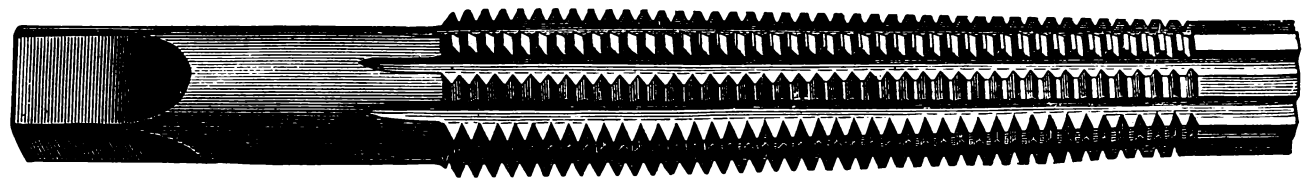

Fig. 311.

The object of cutting grooves in the sides of the chasers is that the fine burrs formed by the ends of the set screws do not prevent the chasers from moving easily in the collet during the process of adjustment; the groove also acts as a shoulder for the screw end to press the chaser down to its seat. These chasers are marked to their respective places in the collet, and are so made that if one chaser should break, a new one can be supplied to fit to its place, the teeth of the new one falling exactly in line with the teeth on the other three, whereas under ordinary conditions if one chaser breaks, a full set of four new ones must be obtained.

In this die, as in all others which cut a full thread at one passage along the work, the front teeth of the chasers are beveled off as shown in the cut; this is necessary to enable the dies to take hold of or "bite" the work, the chamfer giving a relief to

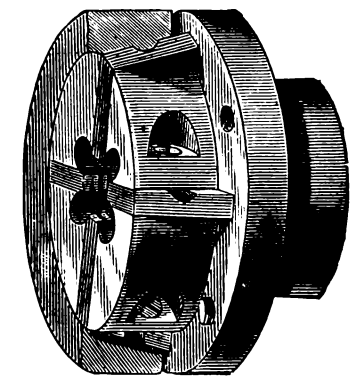

Fig. 313.

the cutting edge, while at the same time forming to a certain extent a wedge facilitating the entrance of the work into the die.

Fig. 314 represents J. J. Grant's patent die, termed by its makers (Wiley and Russel) the "lightening die." In this, as in other similar stocks, several collets with dies of various pitches and diameters of thread, fit to one stock. The nut of the stock is split on one side, and is provided with lugs on that side to receive a screw, which operates to open and enlarge the bore to

release a collet, or close thereon and grip it, as may be required when inserting or extracting the same. The dies are formed as shown in Fig. 315, in which A A are the dies, and B the collet. To

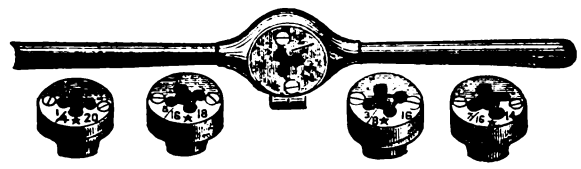

Fig. 314.

open the dies within the collet, the screws E are loosened and the screws D are tightened, while to close the dies screws D are loosened and E are tightened; thus the adjustment to size is effected by these four screws, while the screws D also serve to hold the dies to the collet B. The collets are provided with a collar, having a bore F,

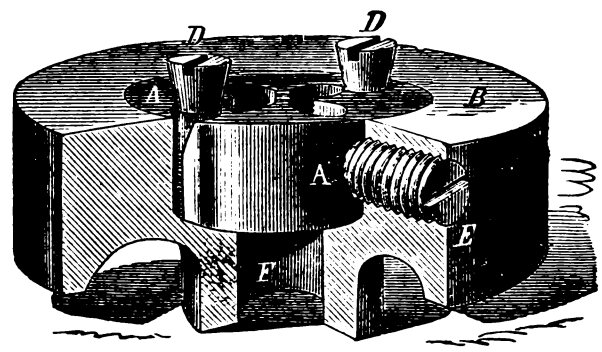

Fig. 315.

through which the work passes, so that the dies may be guided true when starting upon the work; but if it is required to cut a thread close up to a head or shoulder, the stock is turned upside down, not only to have the collet out of the way of the head or shoulder, but also because the thread of the dies on the collet side are chamfered off (as is necessary in all solid dies, or dies which cut a full thread at one traverse down the work), so as to enable them to grip or bite the work, and start the thread upon it as before stated.

Fig. 316 represents Woodbridge's improvement of Grant's adjustable die (Fig. 314). In this improvement the screws D, Fig. 316, which bear upon the sides of the cutters, are put in from the top,

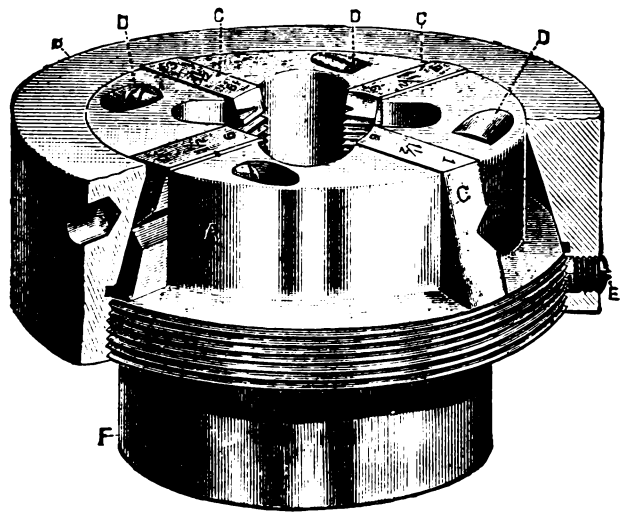

Fig. 316.

and at an angle of 45° with the top surface. The ends where they bear upon the cutters are flat, and bear upon the lower side only of the square grooves in the sides of the cutters, thus holding them firmly down to the bottom of the slot, as well as to the opposite side. The screws are thus accessible without removing anything. The ring is steel, hardened and ground inside, at an angle corresponding to the bevel of the cutters. The small screws for adjusting are threaded into the flange, so that by loosening the screw E the ring can be turned either way by a spanner wrench, and every cutter moved precisely alike. The screw E has a small piece of brass under it, which fits into the threads on the flange, and prevents their becoming injured.

Fig. 317 shows the form adapted to cutting threads of fine pitch on comparatively large diameters, such as in threading brass and iron fittings. It is adapted to receive a threaded shank, which may be fitted to any desired machine or fixture.

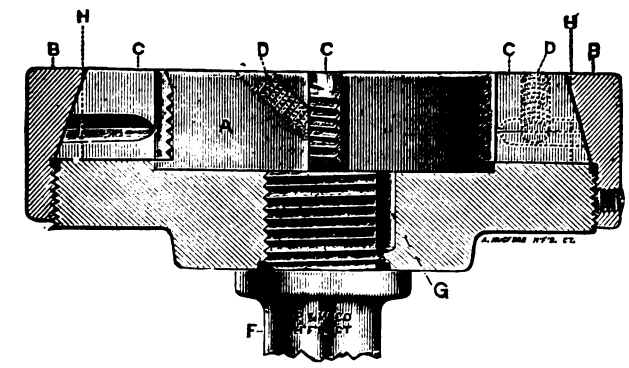

Fig. 317.

In Fig. 317*a* is shown Stetson's die, which cuts a full thread at one passage, is adjustable to take up its wear, and has a guide to steady it upon the work and assist it in cutting a true thread. The guide piece consists of a hub (through which the work passes), having a flange fitting into the dies, and being secured thereto by

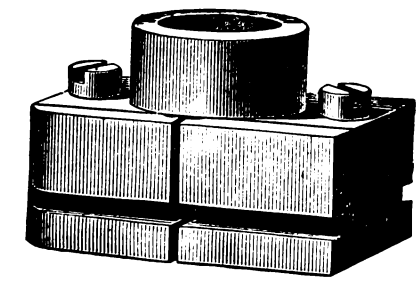

Fig. 317*a*.

the two screws shown. The holes in the flanges are slotted to permit of the dies being closed (to take up wear), by means of the small screws shown at the end of the die, which screws pass through one die in a plain hole and screw into the other.

Stocks and dies for pipe work are made in the form shown in Fig. 318, in which B is the stock having the detachable handles (for ease of conveyance) A, H, the latter being shown detached. The solid screw-cutting dies C are placed in the square recess at B, and are secured in B by the cap D, which swings over (upon its pivoted end as a centre), and is locked by the thumbscrew E.

To guide the stocks and cause them to cut a true thread, the

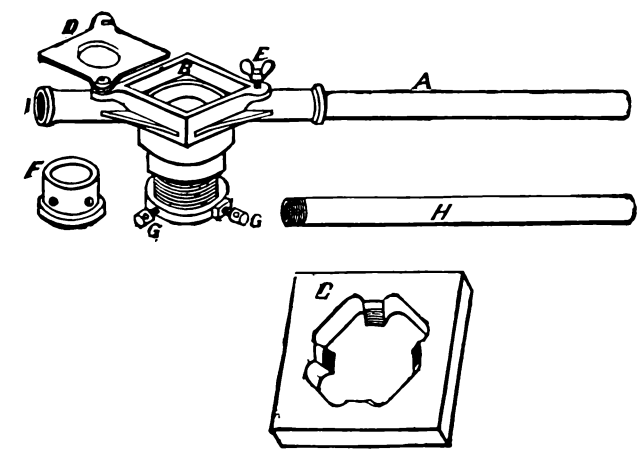

Fig. 318.

bushes F are provided. These fit into the lower end of B, and are locked in position by four set screws G. The bores of the bushes F are made an easy fit to the outside of the pipe to be threaded, there being a separate bush for each size of pipe.

The dies employed in stocks for threading steam and gas pipes by hand are sometimes solid, as in Fig. 318 at C, and at others adjustable. In Fig. 319 is shown Stetson's adjustable pipe die, containing four chasers or toothed thread-cutting tools. These are set to cut the required diameter by means of a small screw in each corner of the die, while they are locked in their adjusted position by four screws on the face.

The tap is a tool employed to cut screw threads in internal surfaces, as holes or bores. A set of taps for hand use usually consist of three: the taper tap, Fig. 320; plug tap, Fig. 321; and bottoming tap, Fig. 322. (In England these taps are termed respectively the taper, second, and plug tap.) The taper tap is

the first to be inserted, and (when the hole to be threaded passes entirely through the work) rotated until it passes through the work, thus cutting a thread parallel in diameter through the

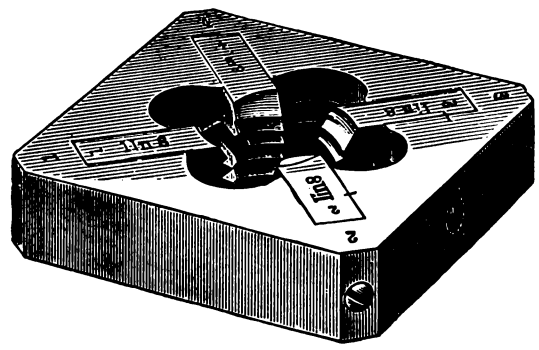

Fig. 319.

full length of the hole. If, however, the hole does not pass through the work, the taper tap leaves a taper-threaded hole

Fig. 320.

Fig. 321.

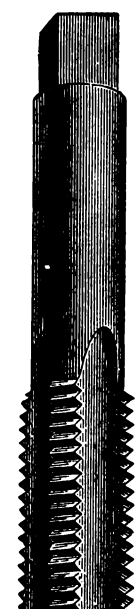

Fig. 322.

containing more or less of a fully developed thread according to the distance the tap has entered.

To further complete the thread the plug tap is inserted, it being parallel from four or five threads from the entering end of the tap to the other end. If the work will admit it, this tap is also passed through, which not only saves time in many cases, by avoiding the necessity to wind the tap back, but preserves the cutting edge which suffers abrasion from being wound back. To cut a full thread as near as possible to the bottom of a hole the bottoming tap is used, but when the circumstances will admit, it is best to drill the hole rather deeper than is actually necessary, to avoid the trouble incident to tapping a hole clear to the bottom.

On wrought iron and steel, which are fibrous and tough, the tap, when used by hand, will not (if the hole be deeper than the diameter of the tap) readily operate by a continuous rotary motion, but requires to be rotated about half a revolution back occasionally, which gives opportunity for the oil to penetrate to the cutting edges of the tap, frees the tap and considerably facilitates the tapping operation, especially if the hole be a deep one.

When the tap is intended to pass entirely through the work with a continuous rotary motion, as is the case, for example, in tapping nuts in a tapping machine, it is made of similar form to the taper hand tap, but longer, as shown in Fig. 323, the thread being full and parallel at the shank end for a distance at least equal to the full diameter of the tap measured across the tops of the thread.

If the thread of a tap be in diametral section a full circle, the sides of the thread rub against the grooves cut by the teeth, producing a friction which augments as the sharp edge of the teeth become dulled from use, but the tap cuts a thread of great diametral accuracy.

To reduce this friction to a minimum as much as is consistent with maintaining the standard size of the tapped hole, taps are sometimes given clearance in the thread, that is to say, the back of each tooth recedes from a true circle, as shown in Fig. 324, in which A A represents a washer, and B a tap in the same, the back of the teeth receding at C, D, E, from the true circle of the bore of A A, the tap cutting when revolved in the direction of the arrow. The objection to this is that when the tap is revolved backwards, as it must be to extract it unless the hole passes clear through the work, the cuttings lodge between the teeth and the thread in the work, rendering the extraction of the tap difficult, unless, indeed, the clearance be small enough in amount to clear the sides of the thread in the work sufficiently to avoid friction without leaving room for the cuttings to enter. If an excess of clearance be allowed upon taps that require to be used by hand, the tap will thread the hole taper, the diameter being largest at the top of the hole. This occurs because the tap is not so well steadied by its thread, which fails to act as a guide, and it is impossible to revolve the tap steadily by hand. Taps that are revolved by machine tools may be given clearance because both the taps and the work are detained in line, hence the tap cannot wobble.

In some cases clearance is given by filing or cutting off the tops of the threads along the middle of the teeth, as shown in Fig. 325 at A, B, C, which considerably reduces the friction. If clearance were given to a tap after this manner but extended to the sides and to the bottom of the thread, it would produce the best of results (for all taps that do not pass entirely through the hole), reducing the friction and leaving no room for the cuttings to jam in the threads when the tap is being backed out. The threads of Sir Joseph Whitworth's taper hand taps are made parallel, measured at the bottom of the thread, and parallel at the tops of the thread for a distance equal to the diameter of the tap at the shank end; thence, to the entering end of the tap, the tops of the thread are turned off a straight taper, the amount of taper being slightly more than twice the depth of the thread: hence, the thread is just turned out at the entering end of the tap, and that end is the exact proper size for the tapping hole.

Fig. 323.

This enables the tap to enter the tapping hole for a distance enveloping one or perhaps two of the tap threads, leaving the extreme end of the tap with the thread just turned out. In the practice of some tap makers the diameter of the thread at the

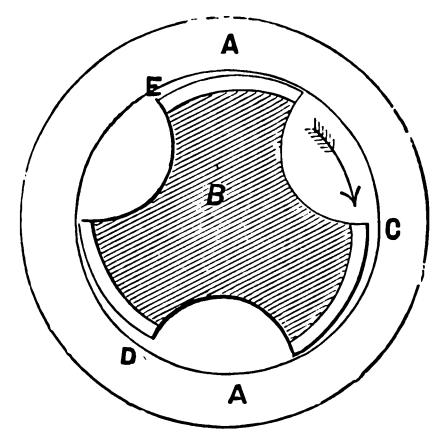

Fig. 324.

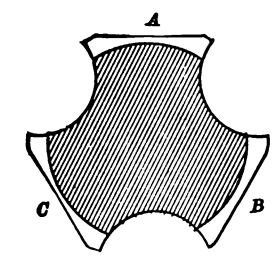

Fig. 325.

top is made the same as in the Whitworth system, but there is more depth at the root of the thread and near the entering end of the tap, hence the bottoms of the thread at that end perform no cutting duty. This is done to enable the tap to take hold of, and start a thread in, the work more readily, which it does for the following reasons. In Fig. 326 is a piece of work with a tap A, having a tapered thread, and a tap B, in which the taper is given by turning off the thread. In the case of A the teeth points

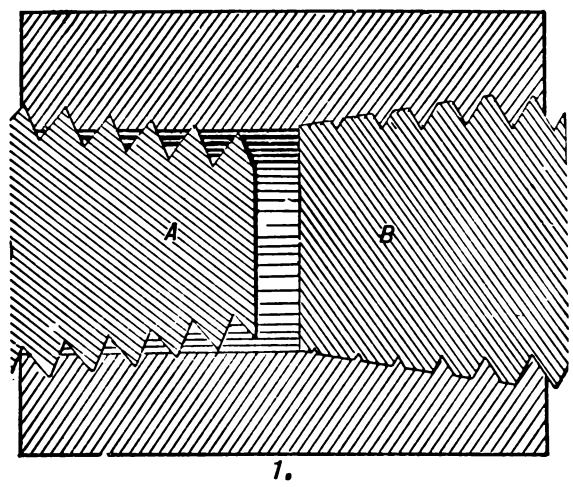

Fig. 326.

cut a groove that is gradually widened and deepened as the tap enters, until a full thread is finally produced. In the case of B the teeth cut at first a wide groove, leaving a small projection, that is a part of the actual finished thread, and the groove gets narrower as the tap enters; so that in the one case no part of the thread is finished until the tap has entered to its full diameter, while in the other the thread is finished as it is produced. On entering, therefore, more cutting duty is performed by B than by

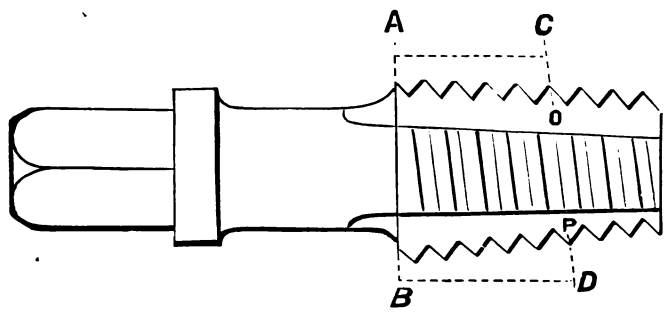

Fig. 327.

A, because a greater length of cutting edge is in operation and more metal is being removed, and as a result B requires more power to start it, so that in practice it is necessary to exert a pressure upon it, tending to force it into the hole while rotating it. The cutting duty on B decreases as the tap enters, because it gets a less width and area of groove to cut, while the cutting duty on A increases as the tap enters, because it gets a greater width and area of groove to cut. In the latter case the maximum of pressure falls on the tap when it has entered the hole deepest, and hence can be operated steadiest, which, independent of its entering easiest, is an advantage. When, however, the bottom of a thread is taper (as must be the case to enable it to cut as at A), the cutting edge of each tooth does not cut a groove sufficiently large in diameter to permit the tooth itself to pass through. In Fig. 327, for example, is shown a tap which is taper and has a full thread from end to end (as is necessary for pipe tapping). Its diameter increases as the thread proceeds from the end towards the line A B. Now take the tooth O P, which stands lengthwise, in the plane C D. Its cutting edge is at P, but the diameter of the tap at P is less than it is at O, while O has to pass through the groove that P cuts. To obviate this difficulty the tap is given clearance, as shown in Fig. 324, the amount being slightly more than the difference in the diameter of the tap at O and at P in that figure. It follows, therefore, that a tap having taper from end to end and a full thread also, as shown in the lower tap in Fig. 328, is wrong in principle, and from the unsteady manner in which it operates is undesirable, even though its thread be given clearance.

In some cases the thread is made parallel at the tops and turned taper for a distance of $\frac{1}{3}$ or $\frac{1}{2}$ the length of the tap, the root of the thread at the taper part being deepened and the tops being given a slight clearance. This answers very well for shallow holes, because the taper tap cuts more thread on entering a given depth so that the second tap can follow more easily, but the tap will not operate so steadily as when the taper part is longer.

It is on account of the tops of the teeth performing the main part of the cutting that a tap taper may be sharpend by simply grinding the teeth tops. In the Pratt and Whitney taps, the hand taper tap is made parallel at the shank end for a distance equal in length to the diameter of the tap.

The entering end of the taper tap is made straight or parallel for a distance equal in length to one half the diameter of the tap,

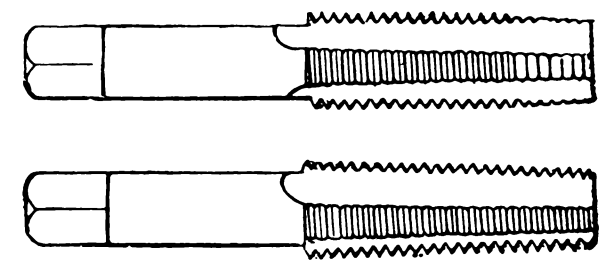

Fig. 328.

the diameter at this end being the exact proper size of tapping hole. The parallel part serves as a guide, causing the tap to enter and keep axially true with the hole to be tapped. The plug and bottoming taps are made parallel in the thread, the former being tapered slightly at and for two or three threads from the entering, as shown in Fig. 328. The threads are made parallel at the roots.

The Pratt and Whitney taper taps for use in machines are of the following form :—

The entering end of the tap is equal in diameter to the diameter of the tapping hole into which the tap will enter for a distance of two or three threads. The thread at the shank end is parallel both at the top and at the root for a distance equal, in length, to twice the diameter of the tap. The top of the thread has a straight taper running from the parallel part at the shank to the point or entering end, while the roots of the thread are made along this taper twice the taper that there is at the top of the thread, which is done to make the tap enter and take hold of the nut more easily.

A form of tap that cuts very freely on account of the absence of friction on the sides of the thread is shown in Fig. 329. The

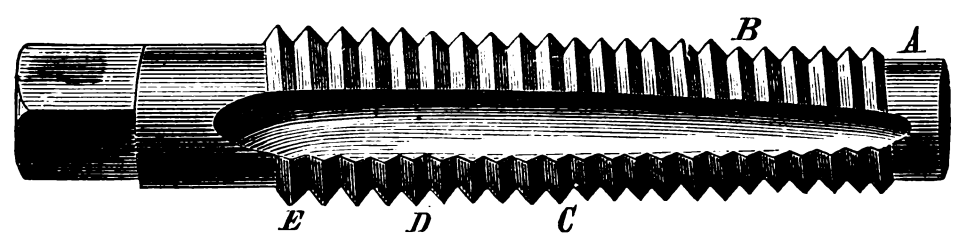

Fig. 329.

thread is cut in parallel steps, increasing in size towards the shank, the last step (from D to E in the figure) being the full size. The end of the tap at A being the proper size for the tapping hole, and the flutes not being carried through A, insures that the tap shall not be used in holes too small for the size of the tap, and thus is prevented a great deal of tap breakage. The bottom of the thread of the first parallel step (from A to B) is below the diameter of A, so as to relieve the sides of the thread of

friction and cause the tap to enter easily. The first tooth of each step does all the cutting, thus acting as a turning tool, while the step within the work holds the tooth to its cut, as shown in Fig. 330, in which N represents a nut and T the tap, both in section. The step C holds the tap to its work, and it is obvious that, as the tooth B enters, it will cut the thread

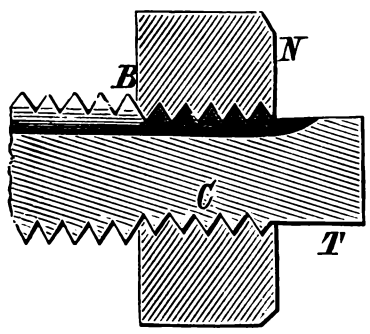

Fig. 330.

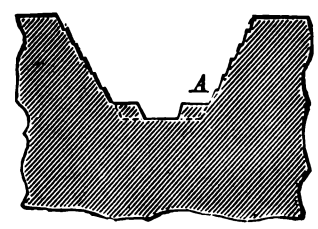

Fig. 331.

to its own diameter, the rest of the teeth on that step merely following frictionless until the front tooth on the next step takes hold. Thus, to sharpen the tap equal to new, all that is required is to grind away the front tooth on each step, and it becomes practicable to sharpen the tap a dozen times without softening it at all. As a sample of duty, it may be mentioned that, at the Harris-Corliss Works, a tap of this class, $2\frac{7}{8}$ inches diameter, with a 4 pitch, and 10 inches long, will tap a hole 5 inches deep, passing the tap continuously through without any backing motion, two men performing the duty with a wrench 4 feet long over all, the work being of cast iron.

Another form of free cutting tap especially applicable to taps of large diameter has been designed by Professor Sweet. Its principles may be explained as follows:—

In the ordinary tap, with the taper four or five diameters in

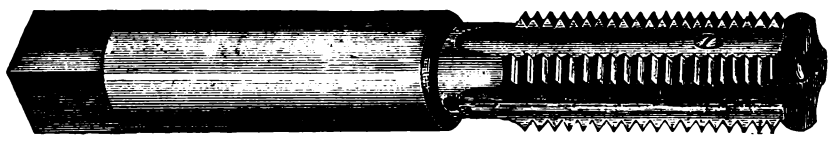

Fig. 333.

length, there are far more cutting edges than are necessary to do the work; and if the taper is made shorter, the difficulty of too little room for chips presents itself. The evil results arising from the extra cutting edges are that, if all cut, then it is cutting the metal uselessly fine—consuming power for nothing; or if some of the cutting edges fail to cut, they burnish down the metal, not only wasting power, but making it all the harder for the following cutters. One plan to avoid this is to file away a portion of the cutting edges; but the method adopted in the Cornell University tap is still better. Assume that it is desired to make three following cutters, to remove the stock down to the dotted line in Fig. 331. Instead of each cutter taking off a layer one-third the thickness and the full width, the first cutter is cut away on each side to about one-third its full width, so that it cuts out the centre to its full depth, as shown in Fig. 331, the next cutter cutting out the metal at A, and so on. This is accomplished by filing, or in any other way cutting away the sides of one row of the teeth all the way up; next cutting away the upper sides of the next row and the lower sides of the third, leaving the fourth row (if it be a four-fluted tap) as it is left by the lathe, to insure a uniform pitch and a smooth thread.

Figs. 333, 334 and 335 represent an adjustable tap designed by C. R. French, of Providence, R. I., to thread holes accurate in diameter.

The plug tap, Fig. 333, has at its end a taper screw, and the tap is split up as far as the flutes extend, a second screw binds the two sides of the tap together, hence by means of the two screws the size of the tap may be regulated at will. In the third or bottoming tap, Fig. 334, the split extends farther up the shank, and four adjusting screws are used as shown, hence the parallelism of the tap is maintained.

In the machine tap, Fig. 335, there are six adjusting screws, two of those acting to close the tap being at the extreme ends so as to strengthen it as much as possible.

In determining the number, the width, the depth, and the form of flutes for a tap, we have the following considerations. In a tap

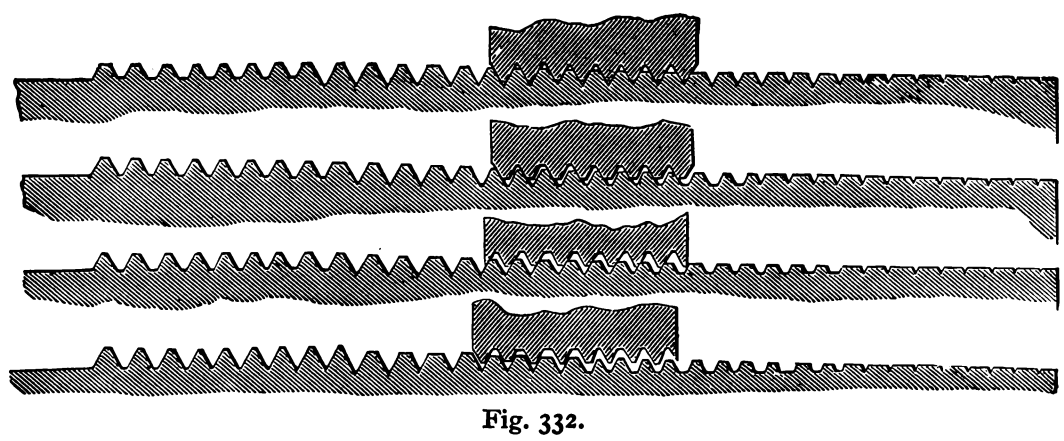

Fig. 332.

to be used in a machine and to pass entirely through the work, as in the case of tapping nuts, the flute need not be deep, because the taper part of the tap being long the cutting teeth extend farther along the tap; hence, each tooth takes a less amount of cut, producing less cuttings, and therefore less flute is required to

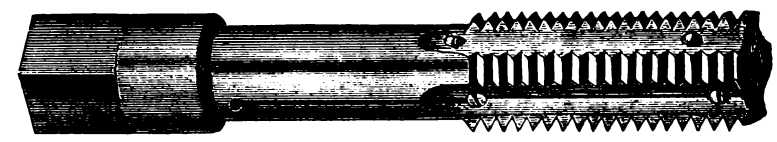

Fig. 334.

hold them. In taps of this class, the thread being given clearance, the length of the teeth may be a maximum, because they are relieved of friction; on the other hand, however, the shallower and narrower the flute the stronger the tap, so long as there is room for the cuttings so that they shall not become wedged in the flutes. Taps for general use by hand are frequently used to tap holes that do not pass entirely through the work; hence, the taper tap must have a short length of taper so that the second tap may be enabled to carry a full thread as near as possible to the bottom of the hole without carrying so heavy a cut as to render it liable to breakage, and the second or plug tap must in turn have so short a length of its end tapered that it will not throw too much duty upon the bottoming tap. Now, according as the length of the taper on the taper tap is reduced, the duty of the teeth is increased, and more room is necessary in the flute to

Fig. 335.

receive the cuttings, and supposing the tap to be rotated continuously to its duty the flute must possess space enough to contain all the cuttings produced by the teeth, but on account of the cuttings filling the flutes and preventing the oil fed to the tap from flowing down the flute to the teeth it is found necessary in hand taps (when they cannot pass through the work, or when the depth of the hole is equal to more than about the tap diameter), to withdraw the tap and remove the cuttings. On account of the tap not being accurately guided in hand-tapping it produces a hole that is largest at its mouth, and it is found undesirable on this account to give any clearance to hand taps, because such clearance gives more liberty to the tap to wobble in the hole and to enlarge its diameter at the mouth. It is obvious also, that the less of the tap circumference removed to form the flutes the longer the tap-teeth and the more steadily the tap may be operated. On the other hand, however, the longer the teeth the greater the amount of friction between them and the thread in the

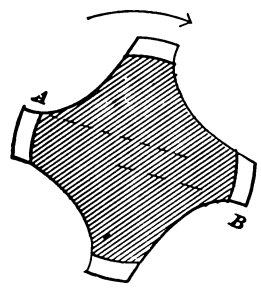

Fig. 336.

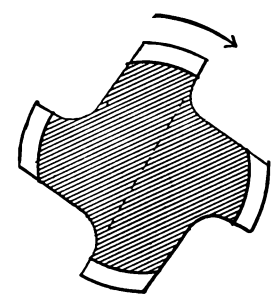

Fig. 337.

hole and the more work there is involved in the tapping, because the tap must occasionally be rotated back a little to ease its cut, which it is found to do.

Fig. 336 represents a form of flute recommended by Brown and Sharp. The teeth are short, thus avoiding friction, and the flutes are shallow, which leaves the tap strong. The inclination of the cutting edges, as A B (the cutting direction of rotation being denoted by the arrow), is shown by the dotted lines, being in a direction to curve the chip or cutting somewhat upward and not throw them down upon the bottom of the flute. A more common form, and one that perhaps represents average American practice, is shown in Fig. 337, the cutting edges forming a radial line as denoted by the dotted line. The flute is deeper, giving more room for the chips, which is an advantage when the tap is required to cut a thread continously without being moved back at all, but the tap is weaker on account of the increased flute depth, the teeth are longer and produce more friction, and the flutes are

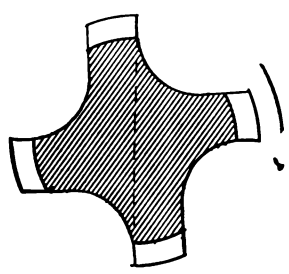

Fig. 338.

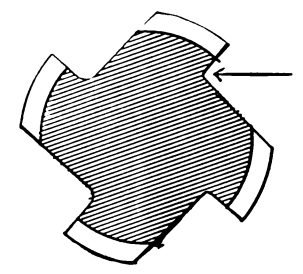

Fig. 339.

deeper than necessary for a tap having a long taper or that requires to be removed to clear out the cuttings. Fig. 338 shows the form of flute in the Pratt and Witney Company's hand taps, the cutting edges forming radial lines and the bottoms of the flutes being more rounded than is usual. It may here be remarked that if the flutes have comparatively sharp corners, as at C in Fig. 339, the tap will be liable to crack in the hardening process. The form of flute employed in the Whitworth tap is shown in Fig. 340; here there being but three flutes the teeth are comparatively long, and on this account there is increased friction. But, on the other hand, such a tap produces, when used by hand, more accurate work, the threaded hole being more parallel and of a diameter more nearly equal to that of the tap, it being observed that even though a hand tap have no clearance it will usually tap a hole somewhat larger than itself so that it will unwind easily. If a hand tap is given clearance not only will it cut a hole widest at the mouth, but it will cut a thread larger than itself in an increased degree, and, furthermore, when the tap requires to be wound back to extract it the fine cuttings will become locked in the threads and the points of the tap teeth are liable to become broken off. To ease the friction of long teeth, therefore, it is preferable to do so either as in Fig. 325 at A, B, C, or as in Fig. 341. In Fig. 325 the tops of the teeth are shown filed away, leaving each end full, so that the cuttings cannot get in, no matter in which direction the tap is rotated; but the

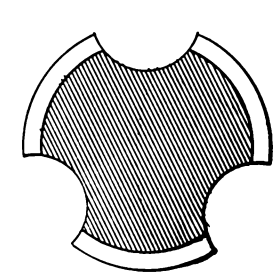

Fig. 340.

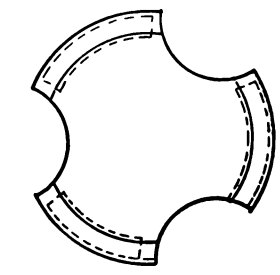

Fig. 341.

clearance is not so complete as in Fig. 341, in which the teeth are supposed to be eased away within the area enclosed by dotted lines, which gives clearance to the bottom as well as to the tops and sides of the thread and leaves the ends of each tooth a full thread.

Concerning the number of flutes in taps, it is to be observed that the duty the tap is to be put to, has much influence in this respect. In hand tapping the object is to tap as parallel and straight as possible with the least expenditure of power. Now, the greater the number of flutes the less the tap is guided, because more of the circumferential guiding surface is cut away. But on the other hand, the less the number of flutes, and therefore the less the number of cutting edges, the more power it takes to operate the tap on account of the greater amount of friction between the tap and the walls of the hole. In hand tapping on what may be termed frame work (as distinguished from such loose work as nuts, &c.), the object is to tap the holes as parallel as possible with the least expenditure of power while avoiding having to remove the tap from the hole to clear it of the cuttings. Obviously the more flutes and cutting edges there are the more room there is for the cuttings and the less frequent the tap requires to be cleaned. If the tapping hole is round and straight the tapping may be made true and parallel if due care is taken, whatever the number of flutes, but less care will be required in proportion as there are less flutes, while, as before noted, more power and more frequent tap removals will be necessary. But if the hole is not round, other considerations intervene.

Thus in Fig. 342 we have a three-flute tap in a hole out of round at A, and it is obvious that when a cutting edge meets the recess at A, all three teeth will cease to cut; hence there will be

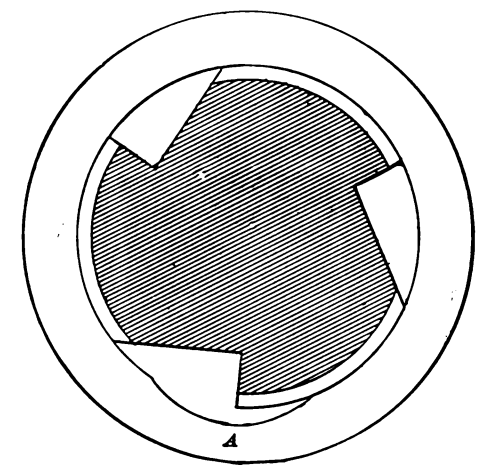

Fig. 342.

no inducement for the tap to move over toward A. But in the case of the four-flute tap in Fig. 343, when the teeth come to A there will be a strain tending to force the teeth over toward the depression A. How much a given tap would actually move over would, of course, depend upon the amount of clearance; but whether the tap has clearance or not, the three-flute tap will not move over, while with four flutes the tap would certainly do so. Again, with an equal width of flute there is more of the circum-

ference tending to guide and steady the three-flute than the four-flute tap. If the hole has a projection instead of a depression, as at B, Figs. 344 and 345, then the advantage still remains with the three-flute tap, because in the case of the three flutes, any lateral movement of the tap will be resisted at the two points *c* and D, neither of which are directly opposite to the location of the pro-

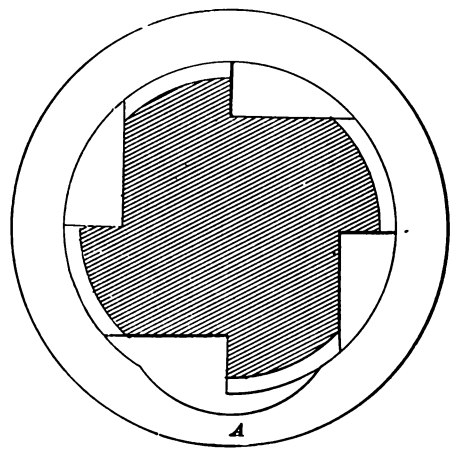

Fig. 343.

jection B; hence, if the projection caused the tap to move laterally, say, 1-100th inch, the effect at *c* and D would be very small, whereas in the four-flute, Fig. 345, the effect at E would be equal to the full amount of lateral motion of the tap.

In hand taps the position of the square at the head of the tap with relation to the cutting-edges is of consequence; thus, in

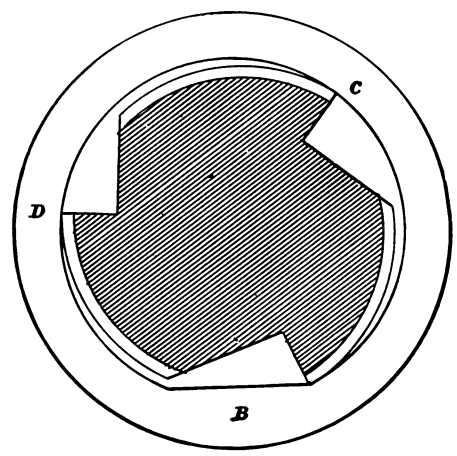

Fig. 344.

Fig. 346, there being a cutting-edge A opposite to the handle, any undue pressure on that end of the handle would cause A to cut too freely and the tap to enlarge the hole; whereas in Fig. 347 this tendency would be greatly removed, because the cutting-edges are not in line with the handle. In a three-flute tap it makes but little difference what are the relative positions of the

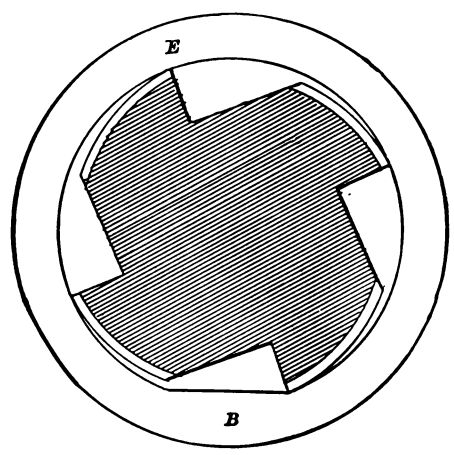

Fig. 345.

square to the flutes, as will be seen in Fig. 348, where one handle of the wrench comes in the most favorable and the other in the most unfavorable position. Taps for use by hand and not intended to pass through the work are sometimes made with the shank and the square end which receive the wrench of enlarged diameter. This is done to avoid the twisting of the shank which sometimes occurs when the tap is employed in deep holes, giving it much strain, and also to avoid as much as possible the wearing and twisting of the square which occurs, because in the course of time the square holes in solid wrenches enlarge from wear,

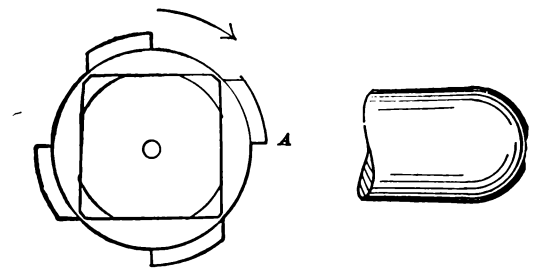

Fig. 346.

and the larger the square the less the wear under a given amount of strain.

Brass finishers frequently form the heads of their taps as in Fig. 349, using a wrench with a slot in it that is longer than the flat of the tap head.

The thickness of the flat head at A is made equal for all

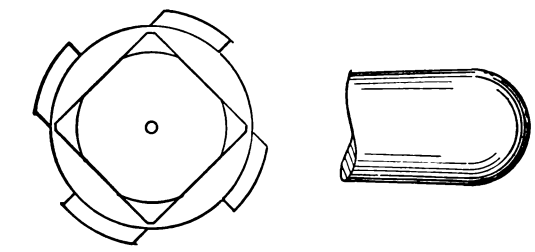

Fig. 347.

the taps intended to be used with the same wrench. By this means one wrench may be used for many different diameters of taps.

For gas, steam pipe, and other connections made by means of screw threads, and which require to be without leak when under

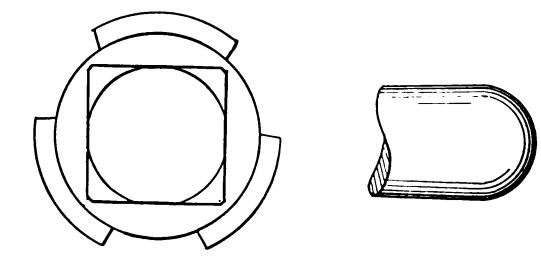

Fig. 348.

pressure, the tap shown in Fig. 350 is employed. It is made taper and full threaded from end to end, so that the fittings may be entered easily into their places and screwed home sufficiently to form a tight joint.

The standard degree of taper for steam-pipe taps is $\frac{3}{4}$ inch per

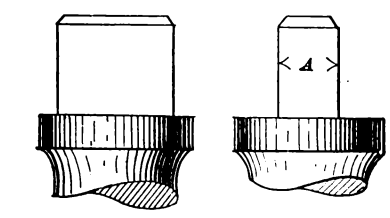

Fig. 349.

foot of length, the taper being the same in the dies as on the taps. The threading tools for the pipes or casings for petroleum oil wells are given a taper of $\frac{3}{8}$ inch per foot, because it was not

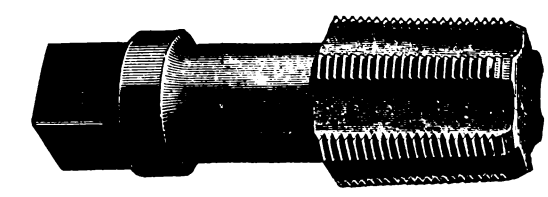

Fig. 350.

found practicable to tap such large fittings with a quick taper, because of the excessive strain upon the threading tools. Ordinary pipe couplings are, however, tapped straight and stretch to

fit when screwed home on the pipe. Oil-well pipe couplings are tapped taper from both ends, and there is just enough difference in the taper on the pipe and that in the socket to show a bearing mark at the end only when the pipe and socket are tested with red marking.

PITCHES OF TAP THREADS IN USE IN THE UNITED STATES.

Diameter.	Length.	No. of Threads to Inch.	Diameter.	Length.	No. of Threads to Inch.
¼	2¾	16, 18 & 20	¾	5 1/16	10, 11 & 12
5/16	2 7/8	16 & 18	13/16	6	10
⅜	3 1/16	14 & 16	⅞	6⅛	9 & 10
7/16	3 3/16	14 & 16	15/16	6⅜	9
½	4 5/16	12, 13 & 14	1	6 13/16	8
9/16	4¾	12 & 14	1⅛	7¼	7 & 8
⅝	5⅛	10, 11 & 12	1¼	8	7 & 8
11/16	5⅜	11 & 12			

Fig. 351 represents the form of tap employed by blacksmiths for rough work, and for the axles of wagon wheels. These taps are given a taper of ½ inch per foot of length, and are made with

Fig. 351.

right and left-hand threads, so that the direction of rotation on both sides of a wagon wheel shall be in a direction to screw up

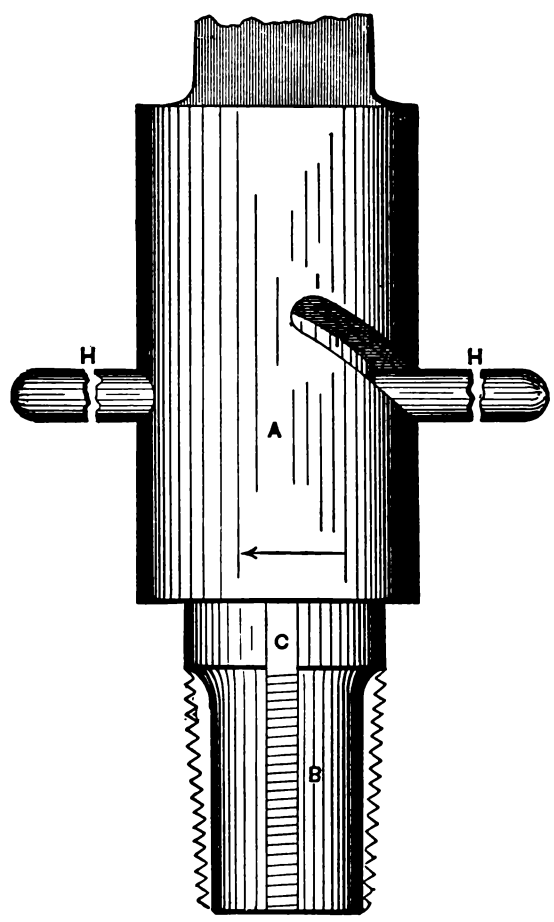

Fig. 352.

the nuts and not to unscrew the nut, as would be the case if both ends of the axle were provided with right-hand threads.

so that the tap may be instantly withdrawn from the hole instead of requiring to be rotated backwards. This is an advantage, not only on account of the time saved, but also because the cutting edges of the teeth are saved from the abrasion and its consequent wear which occur in rotating a tap backwards.

Figs. 352 and 353 represent a collapsing tap that is much used in manufactories of pipe fittings.

A is driven by the spindle of the machine, and drives B through the medium of the pin H. In B are three chasers C, fitting into the dovetail and taper grooves D. These chasers are provided with lugs fitting into an annular groove E sunk in A, so that if the piece H rises, the chasers will not rise with it, but will simply close together by reason of the lifting or rising of the core B, with its taper dovetail grooves ; or, on the other hand, if the

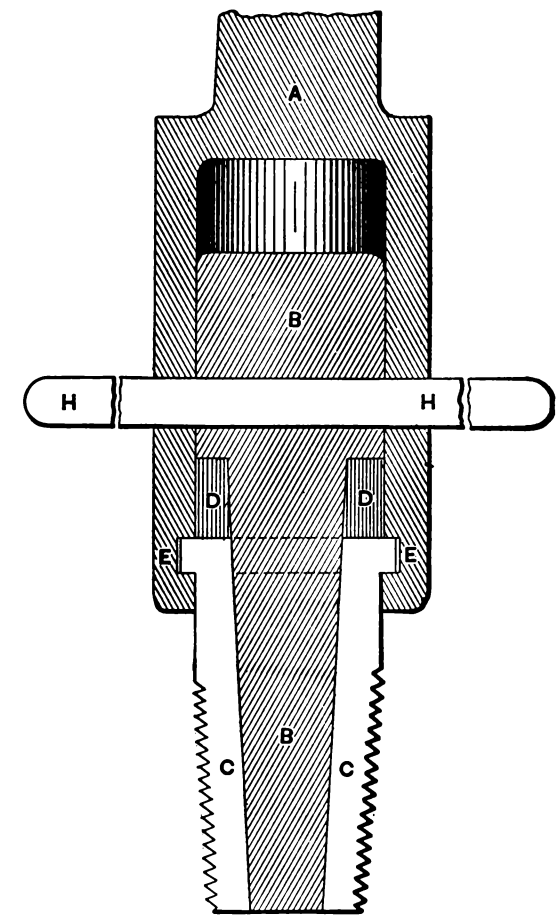

Fig. 353.

core B descends, the taper grooves in B force the chasers outward, increasing their cutting diameter.

When the tap is cutting, it is driven as denoted by the arrow, and the pin H is driven by the ends of the grooves, of which there are two, one diametrically opposite the other, inclined in the same direction. But when the tap has cut a thread to the required depth on the work, the handles H may be pulled or pushed the working way, passing along the grooves I, and causing B to lift within A, and allowing the chasers to close away from the thread just cut, and the tap may be instantly withdrawn, and handles H pushed back to expand the chasers, ready for the next piece of work.

Fig. 354 represents a collapsing tap used in Boston, Massachusetts, at the Hancock Inspirator Works, in a monitor or turret lathe. It consists of an outer shell A carrying three chasers B, pivoted to A at C, having a small lug E at one end, and being

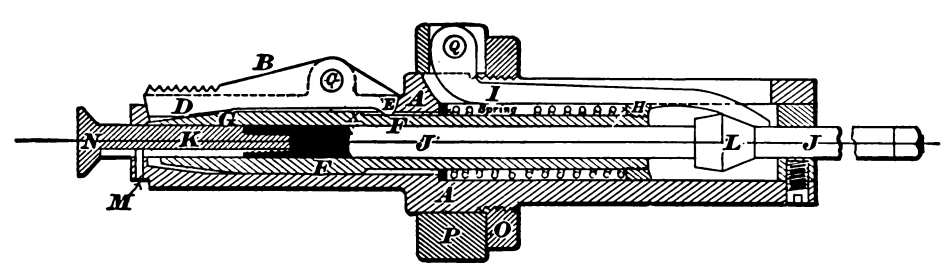

Fig. 354.

Taps that are used in a machine are sometimes so constructed that upon having tapped the holes to the required depth, the pieces containing the tap teeth recede from the walls of the hole, coned at the inner end D. The inner shell F is reduced along part of its length to receive the lug E of the chaser, and permit the chasers to open out full at their cutting end. F has a cone at

the end G, fitting to the internal cone on the chasers at D. At the other end of F is a washer H, against which abuts the spiral spring shown, the other end of this spring abutting against a shoulder provided in A. The washer H is bevelled on its outer or end face to correspond with the bevel on a notch provided in lever I, as is shown. Within the inner tube F is the stem J, into the end of which is fitted the piece K, and on which is fixed the cone L. Piece K, and therefore L, is prevented from rotating by a spline in K, into which spline the pin M projects.

The operation is as follows. In the position in which the parts are shown in the engraving, F is pushed forward so that its coned end G has opened out the chaser to its fullest extent, which opening is governed by contact of the lug E with the reduced diameter of F. Suppose that the tap is operating in the work, then, when the foot N of K meets with a resistance (as the end of the hole being tapped), J, and therefore L, will be gradually pushed to the right, until, finally, the cone on L will raise the end of lever I until the notch on I is clear of H, when the spiral spring, acting against H, will force F to the right, and the shoulder on F, at X, will lift the end E of the chaser, causing the cutting end to collapse within A, the pivot C being its centre of motion. The whole device may then be withdrawn from the work. To open the chasers out again the rod J is forced, by hand, to the left, the cone-piece L meeting the face of H and pushing it to the left until cone G meets cone D, when the chasers open until the end E meets the body of F, as in the cut. The rod J is then pulled to the right until L again meets the curved end of lever I and all the parts assume the positions shown in the cut. To regulate the depth of thread the tap shall cut, the body A is provided with a thread to receive the nut O, by means of which the collar P may be moved along A. This collar carries the pivots Q for levers I, so that, by shifting O, the position of I is varied, hence the point at which L will act upon the end of I and lift it to release H is adjustable.

When used upon steel, wrought iron, cast iron, copper, or brass, a tap should be freely supplied with oil, which preserves its cutting edge as well as causes it to cut more freely, but for cutting the soft metals such as tin, lead, &c., oil is unnecessary.

The diameters of tapping holes should be equal to the diameter of the thread at the root, but in the case of cast iron there is much difference of opinion and practice. On the one hand, it is claimed that the size of the tapping hole should be such as to permit of a full thread when it is tapped; on the other hand, it is claimed that two-thirds or even one-half of a full thread is all that is necessary in holes in cast iron, because such a thread is, it is claimed, equally as strong as a full one, and much easier to tap. In cases where it is not necessary for the thread to be steamtight, and where the depth of the thread is greater by at least $\frac{1}{8}$ inch than the diameter of the bolt or stud, three-quarters of a full thread is all that is necessary, and can be tapped with much less labor than would be the case if the hole were small enough to admit of a full thread, partly because of the diminished duty performed by the tap, and partly because the oil (which should always be freely supplied to a tap) obtains so much more free access to the cutting edges of the tap. If a long tap is employed to cut a three-quarter full thread, it may be wound continuously down the hole, without requiring to be turned backwards at every revolution or so of the tap, to free it from the tap cuttings or shavings, as would be necessary in case a full thread were being cut. The saving of time in consequence of this advantage is equal to at least 50 per cent. in favor of the three-quarter full thread.

As round bar iron is usually rolled about $\frac{1}{32}$ inch larger than its designated diameter, a practice has arisen to cut the threads upon the rough iron just sufficiently to produce a full thread, leaving the latter $\frac{1}{32}$ inch above the proper diameter, hence taps $\frac{1}{32}$ inch above size are required to thread nuts to fit the bolts. This practice should be discountenanced as destroying in a great measure the interchangeability of bolts and nuts, because $\frac{1}{32}$ inch is too small a measurement to be detected by the eye, and a measurement or trial of the bolt and nut becomes necessary.

A defect in taps which it has been found so far impracticable to eliminate is the alteration of pitch which takes place during the hardening process. The direction as well as the amount of this variation is variable even with the most uniform grades of steel, and under the most careful manipulation. Mr. John J. Grant, in reply to a communication upon this subject, informs me that, using Jones and Colver's (Sheffield) steel, which is very uniform in grade, he finds that of one hundred taps, about 5 per cent. will increase in length, the pitch of the thread becoming coarser; 15 per cent. will suffer no appreciable alteration of pitch, and 80 per cent. will shrink in length, the pitch becoming finer, and these last not alike. But it must be borne in mind that with different steel the results will be different, and the greater the variation in the grade of the steel the greater the difference in the alteration of pitch due to hardening.

It is further to be observed that the expansion or contraction of the steel is not constant throughout the same tap; thus the pitches of three or four consecutive teeth may measure correct to pitch, while the next three or four may be of too coarse or too fine a pitch.

There is no general rule, even using the same grade of steel, for the direction in which the size of a tap may alter in hardening, as is attested by the following answers made by Mr. J. J. Grant to the respective questions:—

"Do the taps that shorten most in length increase the most in diameter?"

Answer.—"Not always; sometimes a tap that shortens by hardening becomes also smaller in diameter, while sometimes a tap will increase in length, and also in diameter from hardening."

"Do taps that remain of true pitch after hardening remain true, or increase or diminish in diameter?"

Answer.—"They will generally be of larger diameter."

"Do small taps alter more in diameter from hardening than large ones?"

Answer.—"No; the proportion is about the same, and is about ·002 per inch of diameter."

"What increase in diameter do you allow for shrinkage in hardening of hob taps for tapping solid dies?"

Answer.—"As follows:—

Diameter of Hob Tap.	Shrinkage about
$\frac{1}{4}$ inch	·003
$\frac{1}{2}$ "	·003
$\frac{3}{4}$ "	·005
1 "	·008

"Suppose a tap that had been hardened and tempered to a straw color contained an error $\frac{1}{1000}$ inch both in diameter and in pitch, was softened again, would it when soft retain the errors, or in what way would softening affect the tap?"

Answer.—"We have repeatedly tried annealing or softening taps that were of long or short pitch caused by tempering, and invariably found them about the same as before the annealing. The second tempering will generally shorten them more than the first. Sometimes, however, a second tempering will bring a long pitch nearer correct."

"Do you soften your taps after roughing them out in the lathe?"

Answer.—"Never, if we can possibly avoid it. Sometimes it is necessary because of improper annealing at first. The more times steel is annealed the worse the results obtained in making the tool, and the less durable the tool."

The following are answers to similar questions addressed to the Morse Twist Drill and Machine Co.:—

"The expansion of taps during hardening varies with the diameter. A 1-inch tap would expand in diameter from $\frac{1}{1000}$ to $\frac{3}{1000}$ inch."

"Taps above $\frac{1}{2}$ inch diameter expand in diameter to stop the gauge every time."

"The great majority of taps contract in pitch during the hardening, they seldom expand in length."

"The shortening of the pitch and the expansion in diameter have not much connection necessarily, though steel that did not alter in one direction would be more likely to remain correct in the other."

"There does not seem to be any change in the diameter or pitch

of taps if measured after hardening (and before tempering) and again after tempering them."

"Taps once out in length seem to get worse at every heating, whether to anneal or to harden."

It will now be obvious to the reader that the diameter of a tap,

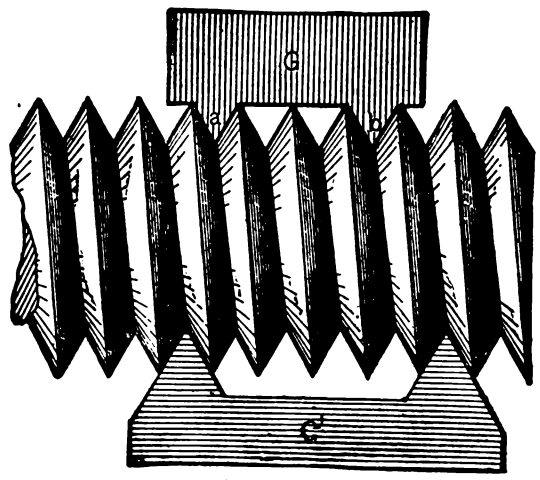

Fig. 355.

to give a standard sized bolt a required tightness of fit, will, as a general rule, require to vary according to the depth of hole to be tapped, because the greater that depth the greater the error in the pitch. Suppose a tap, for example, to get of finer pitch to the amount of ·002 per inch of length, then a hole an inch deep and

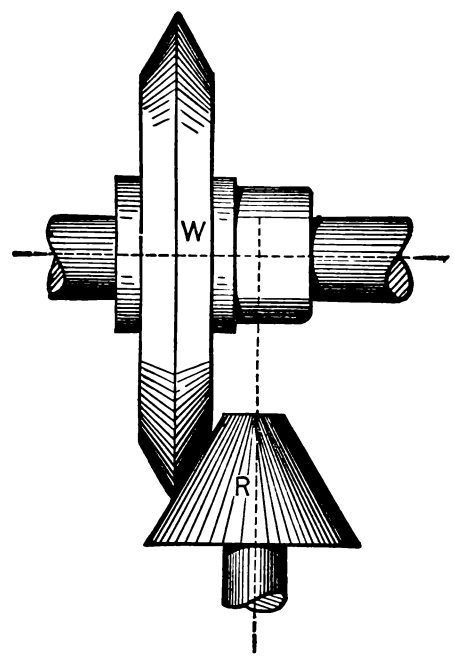

Fig. 356.

tapped with that tap would err ·002 in its depth, while a hole two inches deep would err twice as much in its depth.

Therefore a bolt that would be a hand fit (that is, screw in under hand pressure) in the hole an inch deep would require more force, and probably the use of a wrench, to wind it through the hole 2 inches deep; hence in cases where a definite degree of fit is essential, the reduction in diameter of the male screw or thread necessary to compensate for the error in the tap pitch must vary according to the depth of the hole, and the degree of error in the tap.

It is obvious that the longer a tap is the greater the error induced by hardening, and it often becomes a consideration how to tap a long hole, and obtain a thread true to pitch. This may be accomplished as follows. Several taps are made of slightly different diameters, the largest being of the required finished size. Each tap is made taper for a distance of two or three threads only, and is hardened at this tapered end, but left soft for the remainder of its length. The smallest tap is used first, and when it has tapped a certain distance, a larger one is inserted, and by continuing this interchange of taps and slightly varying the length of the taper, the work may be satisfactorily done.

To test the accuracy, or rather the uniformity, of a thread that has been hardened, a sheet metal gauge, such as at G or at G' (Fig. 355), may be used, there being at *a* and *b* teeth to fit the threads. If the edge of the gauge meets the tops of the threads, then their depth is correct. If it is desired to test only the pitch, then the gauge may be made as at G', where, as is shown in the figure, the edge of the gauge clears the tops of the threads, and in this way may be tried at various points along the thread length.

A method of truing hardened threads invented by J. M.

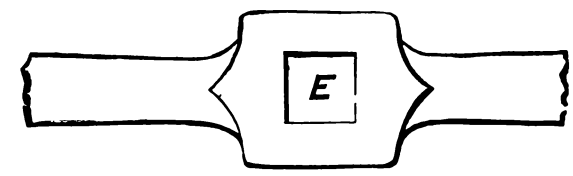

Fig. 358

Heyer, and successfully employed by the Pratt and Whitney Company to true their hardened steel plug-thread gauges, is as follows:—A soft steel wheel about 3½ inches in diameter, whose circumference is turned off to the shape of the thread, is mounted upon the slide rest of a lathe, and driven by a separate belt after the manner of driving emery wheels; this wheel is charged with diamond dust, which is pressed into its surface by a roller, hence it grinds the thread true.

The amount allowed for grinding is $\frac{3}{1000}$ inch measured in the angles of the thread, as was shown in Figs. 280 and 281.

In charging the wheel with diamond dust it is necessary to use a roller shaped as in Fig. 356, so that the axis of the roller R and wheel W shall be at a right angle, as denoted by the dotted lines. If the roller is not made to the correct cone its action will be partly a rolling and partly a sliding one, and it will strip the diamond dust from the wheel rather than force it in, the reasons for this being shown in Figs. 57 and 58 upon the subject of bevel-wheels.

Taps for lead and similar soft metal are sometimes made with three flat sides instead of grooves. The tapping holes may in this case be made of larger diameter than the diameter of the end of the tap thread, because the metal in the hole will compress into the tap thread, and so form a full thread. Taps for other metal have also been made of half-round section. Fig. 357 represents a tap of oval cross section, having two flutes, as shown,

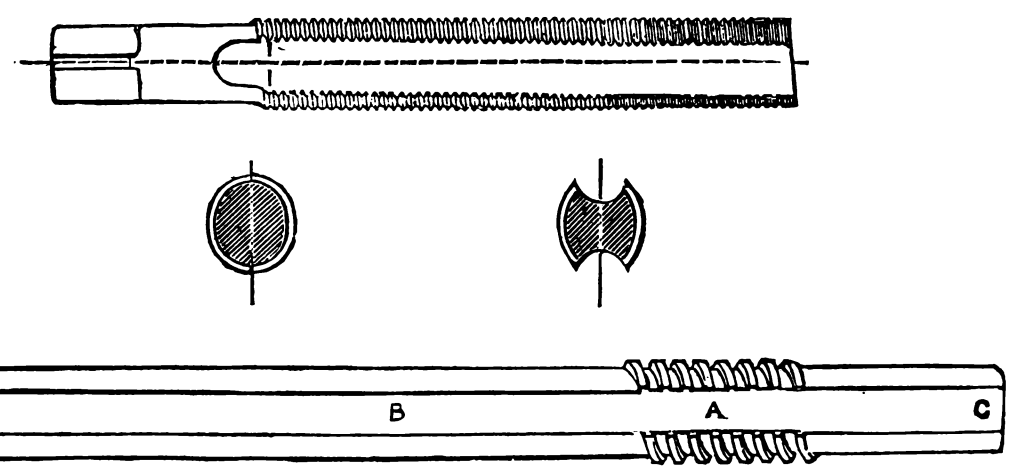

Fig. 357.

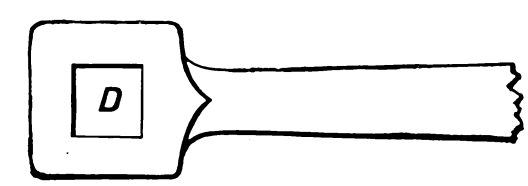

Fig. 359.

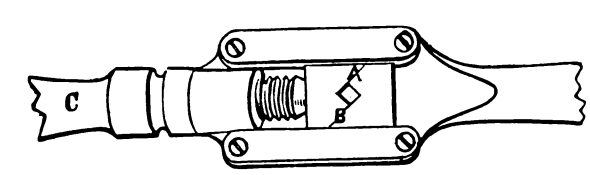

Fig. 360.

but it may be observed that neither half-round nor oval taps possess any points of advantage over the ordinary forms of three or four fluted taps, while the former are more troublesome and costly to manufacture.

When it is required to tap a hole very straight and true, it is sometimes the practice to provide a parallel stem to the tap, as

shown in figure at C. This stem is made a neat working fit to the tapping hole, so that the latter serves as a guide to the tap, causing it to enter and to operate truly.

TAP WRENCH.—Wrenches for rotating a tap are divided into two principal classes, single and double wrenches. The former has the hole which receives the squared end of the tap in the

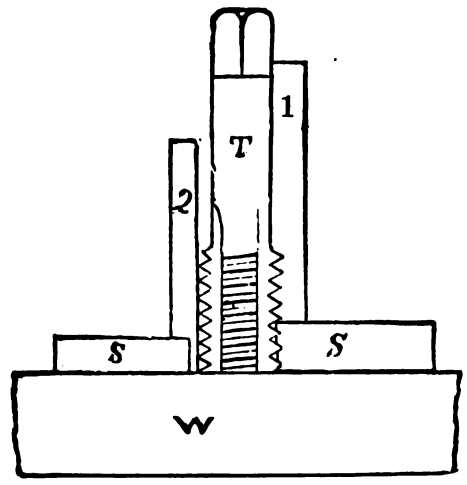

Fig. 361.

middle of its length, as shown in Fig. 358 at E, there being a handle on each side to turn it by.

The single wrench has its hole at one end, as shown in Fig. 359 at D, and is employed for tapping holes in locations where the double wrench could not be got in.

In some cases double tap wrenches are made with two or three

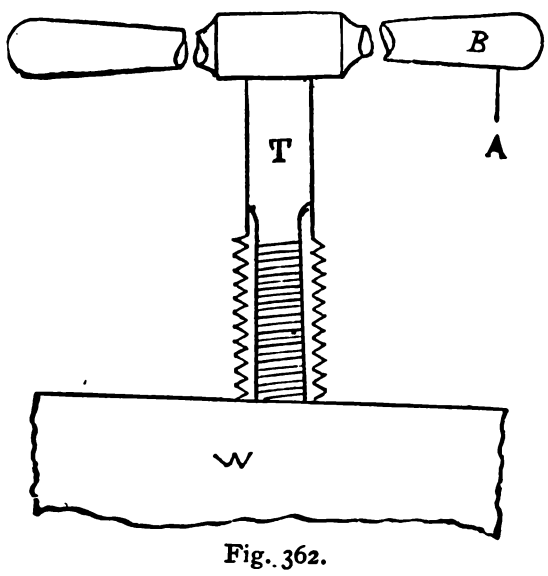

Fig. 362.

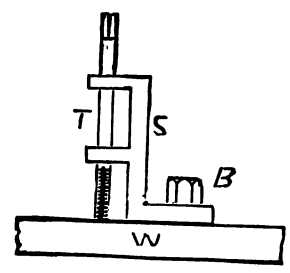

Fig. 363.

sizes of square holes to serve as many different sizes of taps, but this is objectionable, because unless the handles of the wrench extend equally on each side of the tap, the overhanging weight on one side of the tap exerts an influence to pull the tap over to one side and tap the hole out of straight. For taps that have square heads the wrench should be a close but an easy fit to the tap head, otherwise the square corners of the tap become rounded. For the smaller sizes of taps, adjustable wrenches, such as shown in Fig. 360, are sometimes employed. These contain two dies; the upper one, which meets the threaded end of C, being a sliding fit, and the joint faces being formed as shown at A, B. By rotating the handle C its end leaves the upper die, which may be opened out, leaving the square hole between the dies large enough to admit the squared tap end. After the wrench is placed on the tap, C is rotated so as to close the dies upon the tap.

When the location of the tapping hole leaves room for the wrench to rotate a full circle, C is screwed up so that the dies firmly grip the tap head, which preserves the tap head; but when the wrench can only be rotated a part of a revolution, C is adjusted to leave the dies an easy fit to the tap head, so as to enable the wrench to be removed from the tap head with facility and again placed upon the tap head. C is operated by a round lever or pin introduced in a hole in the collar, or the collar may be squared to receive a wrench.

To insure that a tap shall tap a hole straight, the machinist, in the case of hand tapping, applies a square to the work and the tap, as shown in Fig. 361, in which W represents a piece of work, T a tap, and S S two squares. If the tap is a taper one the square is sighted with the shank of the tap, as shown in position 1, but if the thread of the tap is parallel, the square may be applied to the thread of the tap, as in position 2. If the tap leans over to one side, as in Fig. 362, it is brought upright by exerting a

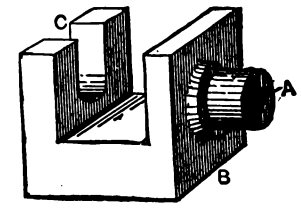

Fig. 366.

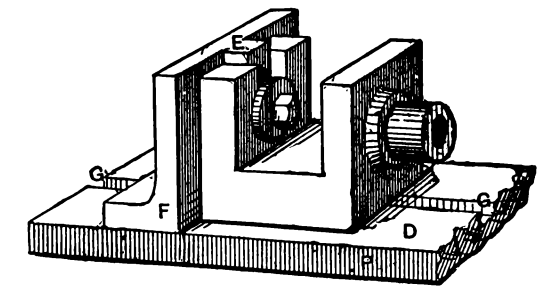

Fig. 367.

pressure on the tap wrench handle B (on the high side) in the direction of the arrow A, while the wrench is rotated; but if the tap leans much to one side it is necessary to rotate the tap back and forth, exerting the pressure on the forward stroke only.

It is necessary to correct the errors before the tap has entered the hole deeply, because the deeper the tap has entered the greater the difficulty in making the correction. If the pressure on the tap wrench be made excessive, it is very liable to cause the tap to break, especially in the case of small taps, that is to say, those of $\frac{1}{8}$ inch or less in diameter. The square should be applied as soon as the tap has entered the hole sufficiently to operate steadily, and should be applied several times during the tapping operation.

When the tap does not pass through the hole it may be employed with a guide which will keep it true, as shown in Fig. 363, in which W is a piece of work, T the tap, and S a guide, the latter being bolted or clamped to the work at B. In this case the shank of the tap is made fully as large in diameter as the thread. In cases where a number of equidistant holes require tapping, as in the case of cylinder ends, this device saves a great

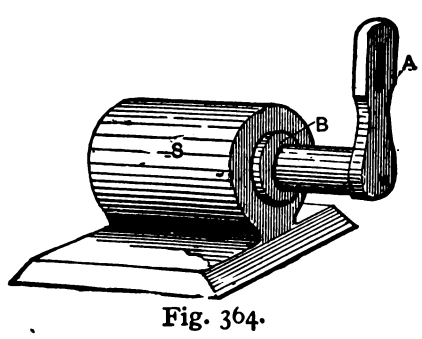

Fig. 364.

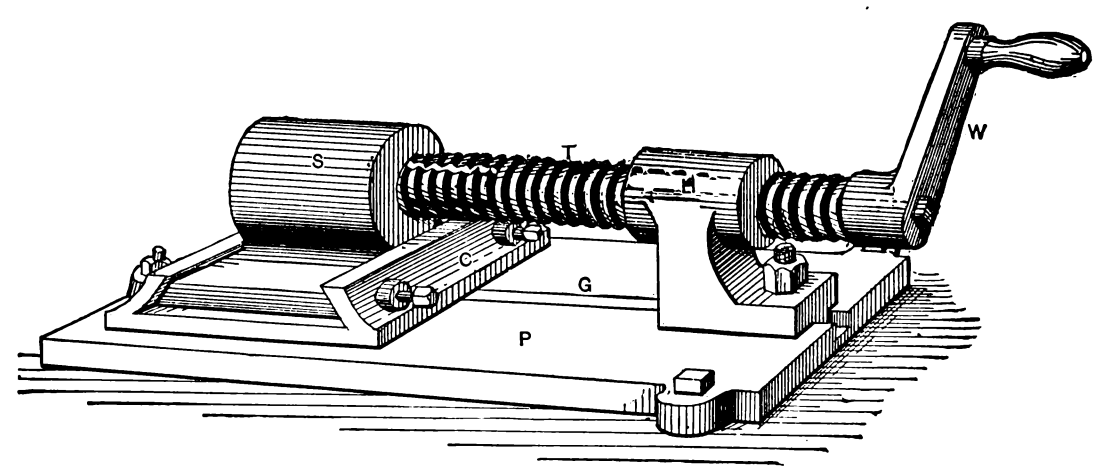

Fig. 365.

deal of time and insures that the tapping be performed true, the hole to receive the bolt B and that to receive the tap being distant apart to the same amount as are the holes in the work.

In shops where small work is made to standard gauge, and on the interchangeable system, devices are employed, by means of

which a piece that has been threaded will screw firmly home to its place, and come to some definite position, as in the following examples. In Fig. 364 let it be required that the stud A shall screw in the slide S; the arm A to stand vertical when collar B is firmly home, and a device such as in Fig. 365 may be employed. P is a plate on which is fixed a chuck C to receive the slide S. In plate P is a groove G to hold the head H at a right angle to the slideway in C, there being a projection beneath H and beneath C

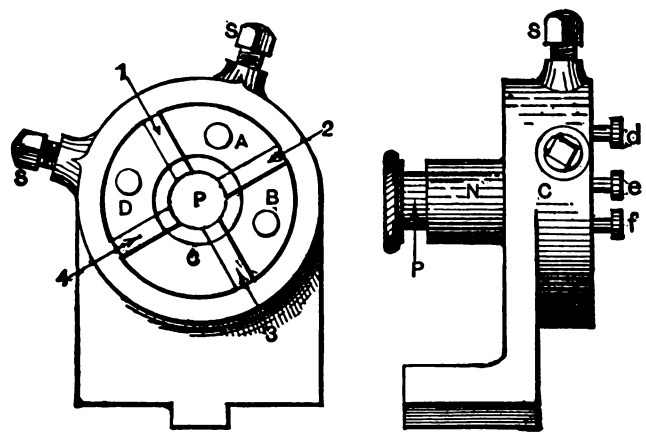

Fig. 368.

to fit into G. The tap T is threaded through H, but not fluted at the part that winds through H when the tapping is being done, so as not to cause the thread in H to wear. H acts as a guide to the tap and causes it to start the thread at the same point in the bore of each piece S, and the stem will be so threaded that the screw starts at the same point in the circumference of each piece.

A second example of uniform tapping is shown in Figs. 366, 367, and 368. The piece, Fig. 366, is to have its bore A tapped in line with the slot C, and the thread is to start at a certain point in its bore. In Fig. 367 this piece is shown chucked on a plate D. F is a chuck having a lug E fitting into the slot (C, Fig. 366) of the work. This adjusts the work in one direction. The face D of the plate adjusts the vertical height of the work, and the alignment of the hole to the axis of the tap is secured in the construction of the chuck, as is shown in Fig. 369. A lug K is at a right angle to the face B of the chuck and stands in a line with lug E, as denoted by the dotted line *g g*, and as lug K fits into the slot G, Fig. 367, the work will adjust itself true when bolted to the plate.

Fig. 368 shows a method of tapping or hobbing four chasers (as for a bolt cutter), so that if the chasers are marked 1, 2, 3 and 4, as shown, any chaser of No. 1 will work with the others, although not tapped at the same operation. C is a chuck with four dies (A, B, C, D) placed between the chasers. By tightening the set-screws S, the dies and chasers are locked ready for the tapping. N is a hub to receive a guide-pin P, which is passed through to hold the chasers true while being set in the chuck, and it is withdrawn before the tapping commences; *d e f* are simply to take hold of when inserting and removing the dies.

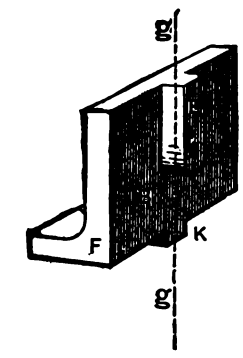

Fig. 369.

It is obvious that a chuck such as this used upon a plate, as in Fig. 365, with the hob guided in the head H there shown, would tap each successive set of chasers alike as a set, and individually alike, provided, of course, that the hob guide or head H is at each setting placed the same distance from the face of the chuck, a condition that applies to all this class of work. In the case of work like chasers, where the tap or hob does not have much bearing to guide it in the work, a three-flute hob should be used for four chasers, or a four-flute hob for three chasers, which is necessary so that the hob may work steadily and tap all to the same diameter.

CHAPTER V.—FASTENING DEVICES.

BOLTS are usually designated for size by their diameters measured at the cylindrical stem or body, and by their lengths measured from the inner side of the head to the end of the thread, so that if a nut be used, the length of the bolt, less the thickness of the nut and washer (if the latter be used), is the thickness of work the bolt will hold. If the work is tapped, and no nut is used, the full length of the bolt stem is taken as the length of the bolt.

A *black* bolt is one left as forged. A finished bolt has its body, and usually its head also, machine finished, but a finished bolt sometimes has a black head, the body only being turned.

A square-headed bolt usually has a square nut, but if the nut is in a situation difficult of access for the wrench, or where the head of the bolt is entirely out of sight (as secluded beneath a flange) the nut is often made hexagon. A machine-finished bolt usually has a machine-finished and hexagon nut. Square nuts are usually left black.

The heads of bolts are designated by their shapes, irrespective

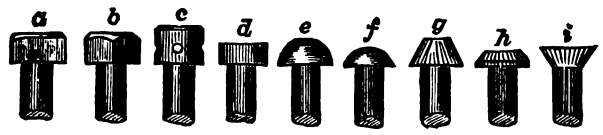

Fig. 370.

of whether they are left black or finished. Fig. 370 represents the various forms: *a*, square head; *b*, hexagon head; *c*, capstan head; *d*, cheese head; *e*, snap head; *f*, oval head, or button head; *g*, conical head; *h*, pan head; *i*, countersink head.

The square heads *a* are usually left black, though in exceptional cases they are finished. Hexagon heads are left black or finished as circumstances may require; when a bolt head is to receive a wrench and is to be finished, it is usually made hexagon. Heads *c* and *d* are almost invariably finished when used on operative parts of machines, as are also *e* and *f*. Heads *g* are usually left black, while *h* and *i* are finished if used on machine work, and left black when used as rivets or on rough unfinished work.

The heads from *e* to *i* assume various degrees of curve or angle to suit the requirements, but when the other end of the bolt is

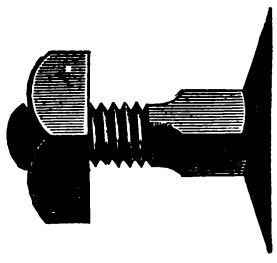

Fig. 371.

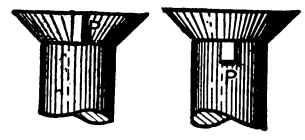

Fig. 372.

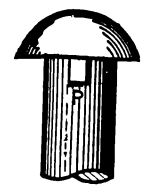

Fig. 373.

threaded to receive a nut, some means is necessary to prevent them from rotating in their holes when the nut is screwed up, thus preventing the nut from screwing up sufficiently tight. This is accomplished in woodwork by forging either a square under the head, as in Fig. 371, or by forging under the head a tit or stop, such as shown in Figs. 372 and 373 at P. Since, however, forging such stops on the bolt would prevent the heads from being turned up in the lathe, they are for lathe-turned bolts put in after the bolts have been finished in the lathe, a hole being subsequently drilled beneath the head to receive the pin or stop, P, Fig. 372, which may be tightly driven in. A small slot is cut in the edge of the hole to receive the stop.

Bolts are designated for kinds, as in Fig. 374, in which *k* is a machine bolt; *l* a collar bolt, from having a collar on it; *m* a cotter bolt, from having a cotter or key passing through it to serve in place of a nut; *n* a carriage bolt, from having a square part under the head to sink in the wood and prevent the bolt from turning with the nut; and *o* a countersink bolt for cases where the head of the bolt comes flush.

The simple designation "machine bolt" is understood to mean a lack or unfinished bolt having a square head and nut, and threaded, when the length of the bolt will admit it, and still leave an unthreaded part under the bolt head, for a length equal to about four times the diameter of the bolt head. If the bolt is

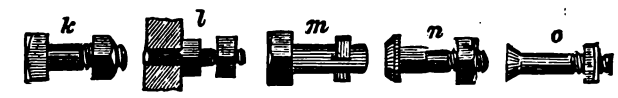

Fig. 374.

to have other than a square head it is still called a machine bolt, but the shape of the head or nut is specially designated as "hexagon head machine bolt," this naturally implying that a hexagon nut also is required.

In addition to these general names for bolts, there are others applied to special cases. Thus Fig. 375 represents a patch bolt or a bolt for fastening patches (as plate C to plate D), its peculiarity being that it has a square stem A for the wrench to screw it in by. When the piece the patch bolt screws into is thin, as in the case of patches on steam boilers, the pitch of the thread may, to avoid leakage, be finer than the usual standard.

In countersink head bolts, such as the patch bolt in Fig. 375, the head is very liable to come off unless the countersink in the work (as in C) is quite fair with the tapped hole (as in D) because the thread of the bolt is made a tight fit to the hole, and all the bending that may take place is in the neck beneath the head, where fracture usually occurs. These bolts are provided with a square head A to screw them in by, and are turned in as at B to a diameter less than that at the bottom of the thread, so that if screwed up until they twist off, they will break in the neck at B.

Instead of the hole being countersunk, however, it may be cupped or counterbored, as in Fig. 376, in which the names of the various forms of the enlargement of holes are given. The difference between a faced and a counterbored hole is that in a

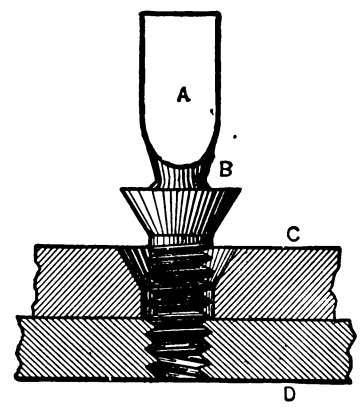

Fig. 375.

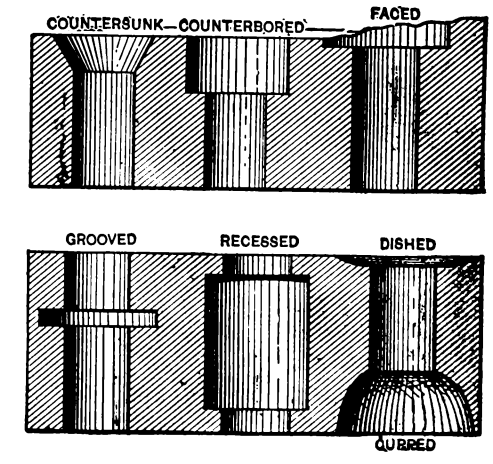

Fig. 376.

counterbored hole the head or collar of the pin passes within the counterbore, the use of the counterbore being in this case to cause the pin to stand firmly and straight. The difference between a dished and a cupped is merely that cupped is deeper than dished, and that between grooved and recessed is that a recess is a wide groove.

Eye bolts are those having an eye in place of a head, as in Fig. 377, being secured by a pin passing through the eye, or by a second bolt, as in the figure. When the bolt requires to pivot, that

part that is within the eye may be made of larger diameter than the thread, so as to form a shoulder against which the bolt may be screwed firmly home to secure it without gripping the eye bolt.

Fig. 378 represents a foundation bolt for holding frames to the stone block of a foundation. The bolt head is coned and jagged with chisel cuts. It is let into a conical hole (widest at

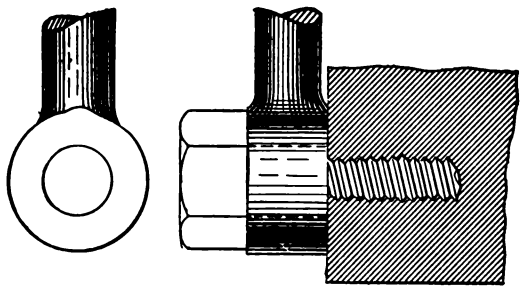

Fig. 377.

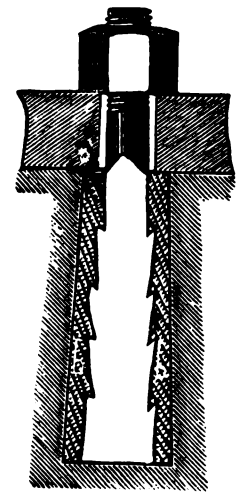

Fig. 378.

the bottom) in the stone block, and melted lead is poured around it to fill the hole and secure the bolt head.

Another method of securing a foundation bolt head within a stone block is shown in Fig. 379; a similar coned hole is cut in the block, and besides the bolt head B a block W is inserted, the faces of the block and bolt being taper to fit to a taper key K, so that driving K locks both the bolt and the block in the stone. When the bolt can pass entirely through the foundation (as when the latter is brickwork) it is formed as in Fig. 380, in which B is

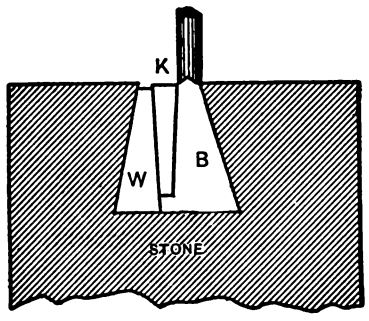

Fig. 379.

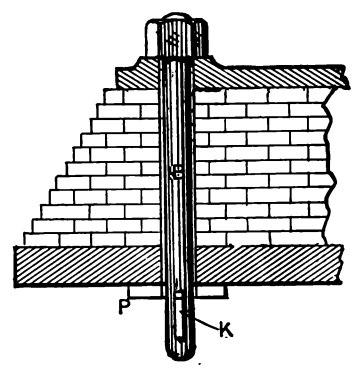

Fig. 380.

a bolt threaded to receive a nut at the top. At the bottom it has a keyway for a key K, which abuts against the plate P. To prevent the key from slackening and coming out, it has a recess as shown in the figure at the sectional view of the bolt on the

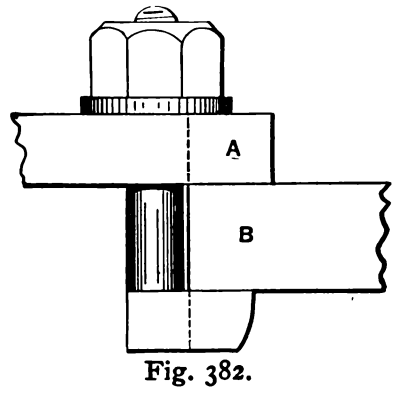

Fig. 382.

right of the illustration, the recess fitting down into the end of the keyway as shown.

Another method is to give the bolt head the form at B in Fig. 381, and to cast a plate with a rectangular slot through, and with two lugs A C. The plate is bricked in and a hole large enough to pass the bolt head through is left in the brickwork. The bolt head is passed down through the brickwork in the position shown at the top, and when it has passed through the slot in the plate it is given a quarter turn, and then occupies the position shown in the lower view, the lugs A C preventing it from turning when the nut is screwed home. The objection to this is that the hole through the brickwork must be large enough to admit the bolt head. Obviously the bolt may have a solid square head, and a square shoulder fitting into a square hole in the plate, the whole being bricked in.

Figs. 382 and 383 represent two forms of hook bolt for use in cases where it is not desired to have bolt holes through both pieces of the work. In Fig. 382 the head projects under the work and for some distance beneath and beyond the washer, as is denoted by the dotted line, hence it would suspend piece A from

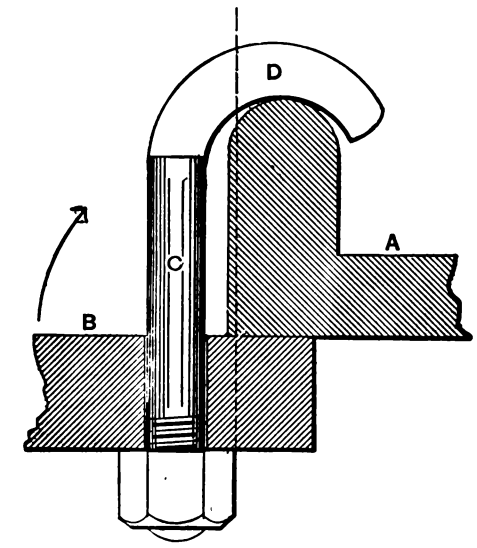

Fig. 383.

B or piece B from A. But in Fig. 383 the nut pressure is not beneath the part where the hook D grips the work, hence the nut would exert a pressure to pull piece B in the direction of the arrow; hence if B were a fixed piece the bolt would suspend A from it, but it could not suspend B from A.

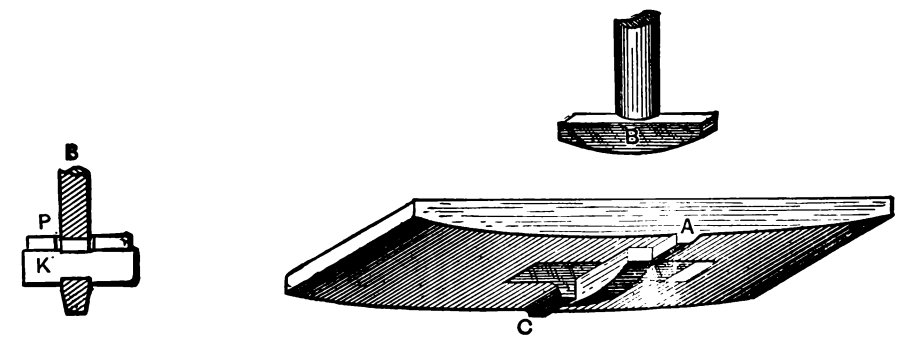

Fig. 381.

In woodwork the pressure of the nut is apt to compress the wood, causing the bolt head and nut to sink into the wood, and to obviate this, anchor plates are used to increase the area receiving the pressure; thus in Fig. 384 a plate is tapped to serve instead of a nut, and a similar plate may of course be placed under the bolt head.

The Franklin Institute or United States Standard for the dimensions of bolt heads and nuts is as follows. In Fig. 385, D represents the diameter of the bolt, J represents the short diameter or width across flats of the bolt head or of the nut, being equal to one and a half times the diameter of the bolt, plus $\frac{1}{16}$ inch for finished

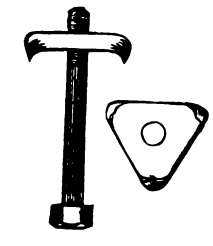

Fig. 384.

heads or nuts, and plus $\frac{1}{8}$ inch for rough or unfinished heads or nuts. K represents the depth or thickness of the head or nut, which in finished heads or nuts equals the diameter of the bolt minus $\frac{1}{16}$ inch, and in rough heads equals one half the distance between the parallel sides of the head, or in other words one half the width across the flats of the head.

H represents the thickness or depth of the nut, which for finished nuts is made equal to the diameter of the bolt less $\frac{1}{16}$ inch, and there-

fore the same thickness as the finished bolt head, while for rough or unfinished nuts it is made equal to the diameter of the bolt or the same as the rough bolt head. I represents the long diameter or

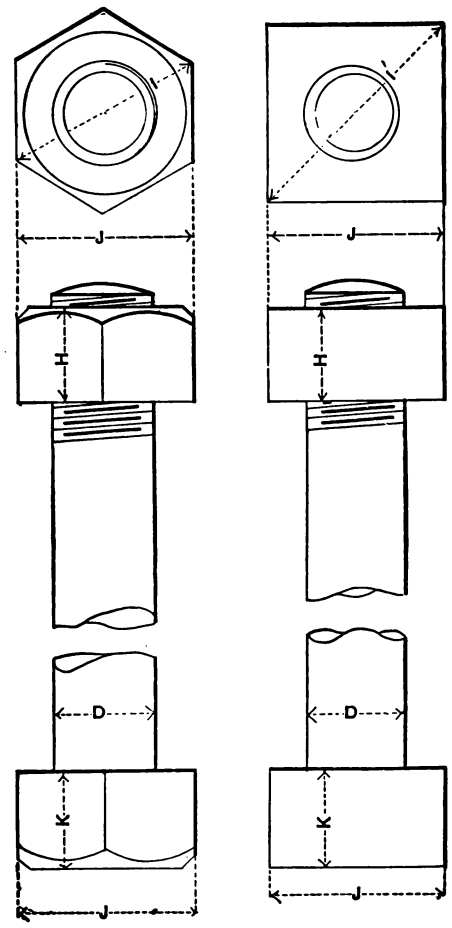

Fig. 385.

diameter across corners, which, however, is a dimension not used to work to, and is inserted in the following tables merely for reference:—

TABLE OF THE FRANKLIN INSTITUTE STANDARD DIMENSIONS FOR THE HEADS OF BOLTS AND FOR THEIR NUTS, WHEN BOTH HEADS AND NUTS ARE OF HEXAGON FORM, AND ARE POLISHED OR FINISHED.

Diameter at top of Thread.	Diameter at bottom of Thread.	Number of Threads per Inch.	Diameter across Flats, or short Diameter.	Thickness or Depth.
¼	·185	20	7/16	3/16
5/16	·240	18	17/32	¼
⅜	·294	16	½	5/16
7/16	·345	14	23/32	⅜
½	·400	13	13/16	7/16
9/16	·454	12	29/32	½
5/8	·507	11	I	9/16
¾	·620	10	I 3/16	11/16
7/8	·731	9	I ⅜	13/16
I	·837	8	I 9/16	15/16
I ⅛	·940	7	I ¾	I 1/16
I ¼	I·065	7	I 5/16	I 3/16
I ⅜	I·160	6	I ⅝	I 5/16
I ½	I·284	6	I 5/16	I 7/16
I 5/8	I·389	5½	I ½	I 9/16
I ¾	I·491	5	I 11/16	I 11/16
I 7/8	I·616	5	I 7/8	I 13/16
2	I·712	4½	1 1/16	I 15/16
2 ¼	I·962	4½	1 7/16	2 3/16
2 ½	2·176	4	1 13/16	2 7/16
2 ¾	2·426	4	1 13/16	2 11/16
3	2·629	3½	2 1/16	2 15/16
3 ¼	2·879	3½	2 5/16	3 3/16
3 ½	3·100	3¼	2 5/16	3 7/16
3 ¾	3·377	3	2 11/16	3 13/16
4	3·567	3	2 11/16	3 15/16
4 ¼	3·798	2⅞	2 15/16	4 3/16
4 ½	4·028	2⅞	3 1/16	4 7/16
4 ¾	4·256	2¾	3 5/16	4 11/16
5	4·480	2½	3 5/16	4 15/16
5 ¼	4·730	2½	3 11/16	5 3/16
5 ½	4·953	2⅜	3 11/16	5 7/16
5 ¾	5·203	2⅜	3 15/16	5 11/16
6	5·423	2¼	4 1/16	5 15/16

Note that square heads are supposed to be always unfinished, hence there is no standard for their sizes if finished.

The Franklin Institute standard dimensions for hexagon and square bolt heads and nuts when the same are left unfinished or rough, as forged, are as follows:—

Bolt Diameter in Inches.	Diameter across corners, or long diameter of hexagon heads	Diameter across corners or long diameter of square heads.	Short diameter, or diameter across flats for square or hexagon heads and nuts.	Thickness or depth for square or hexagon heads.
	Inch.	Inch.	Inch.	Inch.
¼	37/64	7/10	½	¼
5/16	11/16	1 1/32	19/32	19/64
⅜	51/64	1 13/64	11/16	11/32
7/16	29/32	1 7/64	25/32	25/64
½	I	1 15/64	⅞	7/16
9/16	I 1/8	1 23/64	31/32	31/64
⅝	I 7/32	1 ½	I 1/16	17/32
¾	I 7/16	1 49/64	I ¼	⅝
⅞	I 21/32	2 1/32	I 7/16	23/32
I	I ⅞	2 19/64	I ⅝	13/16
I ⅛	2 2/32	2 9/16	I 13/16	29/32
I ¼	2 5/16	2 53/64	2	I
I ⅜	2 17/32	3 3/32	2 3/16	I 3/32
I ½	2 ¾	3 23/64	2 ⅜	I 3/16
I ⅝	2 31/32	3 ⅝	2 9/16	I 9/32
I ¾	3 3/16	3 57/64	2 ¾	I ⅜
I ⅞	3 13/32	4 5/32	2 15/16	I 15/32
2	3 ⅝	4 27/64	3 1/8	I 9/16
2 ¼	4 1/16	4 61/64	3 ½	I ¾
2 ½	4 ½	5 31/64	3 ⅞	I 15/16
2 ¾	4 29/32	6	4 ¼	2 ⅛
3	5 7/16	6 17/32	4 5/16	2 5/16
3 ¼	5 13/16	7 1/16	5	2 ½
3 ½	6 7/64	7 39/64	5 ⅜	2 11/16
3 ¾	6 21/32	8 ⅛	5 ¾	2 ⅞
4	7 3/32	8 41/64	6 ⅛	3 1/16
4 ¼	7 9/16	9 3/16	6 ½	3 ¼
4 ½	7 31/32	9 ¾	6 ⅞	3 7/16
4 ¾	8 13/32	10 ¼	7 ¼	3 ⅝
5	8 27/32	10 29/64	7 ⅝	3 13/16
5 ¼	9 9/32	11 23/64	8	4
5 ½	9 23/32	11 ⅞	8 ⅜	4 3/16
5 ¾	10 5/32	12 ⅜	8 ¾	4 ⅜
6	10 19/32	12 13/16	9 ⅛	4 9/16

The depth or thickness of both the hexagon and square nuts when left rough or unfinished is, according to the above standard, equal to the diameter of the bolt.

The following are the sizes of finished bolts and nuts according to the present Whitworth Standard. The exact sizes are given in decimals, and the nearest approximate sizes in sixty-fourths of an inch:—

Diameter of bolts.	Width of nuts across flats.		Height of bolt heads.	
⅛	·338	21/64 *f*	·1093	7/64
3/16	·448	29/64 *b*	·1640	5/32
¼	·525	33/64 *f*	·2187	7/32
5/16	·6014	19/32 *f*	·2734	17/64
⅜	·7094	45/64 *f*	·3281	21/64
7/16	.8204	53/64 *b*	·3828	⅜ *f*
½	·9191	29/32 *b*	·4375	7/16
9/16	I·011	I 1/64 *b*	·4921	31/64 *f*
⅝	I·101	I 3/32 *f*	·5468	35/64
11/16	I·2011	I 13/64 *b*	·6015	19/32 *f*
¾	I·3012	I 19/64 *f*	·6562	21/32
13/16	I·39	I 25/64 *b*	·7109	45/64 *f*
⅞	I·4788	I 31/64 *b*	·7656	49/64
15/16	I·5745	I 37/64 *b*	·8203	⅞ *f*
I	I·6701	I 43/64 *b*	·875	⅞
I ⅛	I·8605	I 55/64 *f*	·9843	63/64
I ¼	2·0483	2 3/64 *f*	I·0937	I 3/32
I ⅜	2·2146	2 7/32 *b*	I·2031	I 13/64
I ½	2·4134	2 13/32 *f*	I·3125	I 5/16
I ⅝	2·5763	2 37/64 *b*	I·4128	I 27/64
I ¾	2·7578	2 ¾ *f*	I·5312	I 17/32
I ⅞	3·0183	3 1/16 *f*	I·6406	I 41/64
2	3·1491	3 5/32 *b*	I·75	I ¾
2 ⅛	3·337	3 11/32 *b*	I·8523	I 55/64
2 ¼	3·546	3 35/64 *b*	I·9687	I 31/32
2 ⅜	3·75	3 ¾	2·0781	2 5/64
2 ½	3·894	3 57/64 *f*	2·1875	2 3/16
2 ⅝	4·049	4 3/64 *f*	2·2968	2 19/64
2 ¾	4·181	4 3/16 *b*	2·4062	2 13/32
2 ⅞	4·3456	4 11/32 *f*	2·5156	2 33/64
3	4·531	4 17/32 *b*	2·625	2 ⅝

The thickness of the nuts is in every case the same as the diameter of the bolts: *f* = full, *b* = bare.

KEYS AND KEYWAYS.—Keys and keyways are employed for two purposes—for locking permanently in a fixed position, and for locking and adjusting at the same time. Keys that simply permanently lock are usually simply embedded in the work, while those that adjust the parts and secure them in their adjusted positions usually pass entirely through the work. The first are termed sunk keys and keyways; the latter, adjusting keys and through keyways.

The usual forms of sunk keyways are as follows: Fig. 386 represents the common sunk key, the head *h* forming a gib for use in extracting the key, which is done by driving a wedge between the head and the hub of the work.

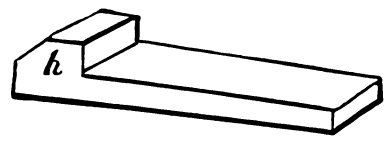

Fig. 386.

The flat key, sunk key, and feather shown in Figs. 387, 388, and 389, are alike of rectangular form, their differences being in their respective thicknesses, which are varied to meet the form of keyway which receives them. The flat key beds upon a flat place upon the shaft, the sunk key beds in a recess provided in the shaft, and the feather is fastened permanently in position in the shaft. The hollow key is employed in places where the wheel or pulley may require moving occasionally on the shaft, and it is undesirable that the latter have any flat place upon it or recess cut in it. The flat key is used where it is necessary to secure the wheel more firmly without weakening the shaft by cutting a keyway in it. The sunk key is that most commonly used; it is employed in all

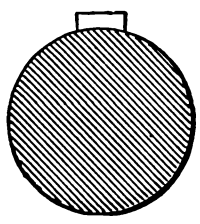

Fig. 387.

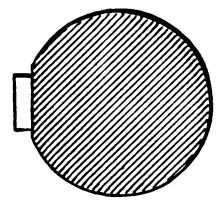

Fig. 388.

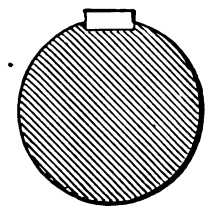

Fig. 389.

cases where the strain upon the parts is great. The feather is used in cases where the keyway extends along the shaft beyond the pulley or wheel, the feather being fast in the wheel, and its protruding part a working fit in the shaft keyway. This permits the wheel to be moved along the shaft while being driven through the medium of the feather along the keyway or spline. The heads of the taper keys are sometimes provided with a set screw as in Fig. 390, which may be screwed in to assist in extracting the key.

Fig. 391 represents an application of keys to a square shaft that has not been planed true. The wheel is hung upon the shaft and four temporary gib-headed keys are inserted in the spaces *a*, *a*, *a*,

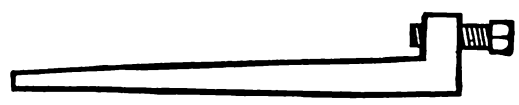

Fig. 390.

a, in Fig. 391. (It may be mentioned here that similar heads are generally forged upon keys to facilitate their withdrawal while fitting them to their seats, the heads being cut off after the key is finally driven home.) These sustain the wheel while the permanent keys, eight in number, as shown in the figure at *b*, *b*, *b*, *b*, *b*, *b*, *b*, *b*, are fitted, the wheel being rotated and tested for truth from a fixed point, the fitting of the keys being made subservient making the wheel run true.

The proportions of sunk keys are thus given by the Manchester (England) rule. The key is square in cross section and its width or depth is obtained by subtracting $\frac{1}{8}$ from the diameter of the shaft and dividing the sum thus obtained by 8, and then adding to the subtrahend $\frac{1}{4}$.

Example.—A shaft is 6 inches in diameter; what should be the cross section dimensions of its key diameter of shaft?

$$6 - \tfrac{1}{8} = 5\tfrac{7}{8},\ \cdot 5\tfrac{7}{8} \div 8 = \cdot 687, \text{ and } \cdot 687 + \cdot 25 = \frac{\cdot 937}{1000} \text{ inch.}$$

In general practice, however, the width of a key is made slightly greater than its depth, and one-half its depth should be sunk in the shaft.

Taper keys are tapered on their surfaces A and B in Fig. 392, and are usually given $\frac{1}{8}$-inch taper per foot of length. There is a tendency either in a key or a set screw to force the hub out of true in the direction of the arrow. It therefore causes the hub bore to grip the shaft, and this gives a driving duty more efficient than the friction of the key itself. But the sides also of the key

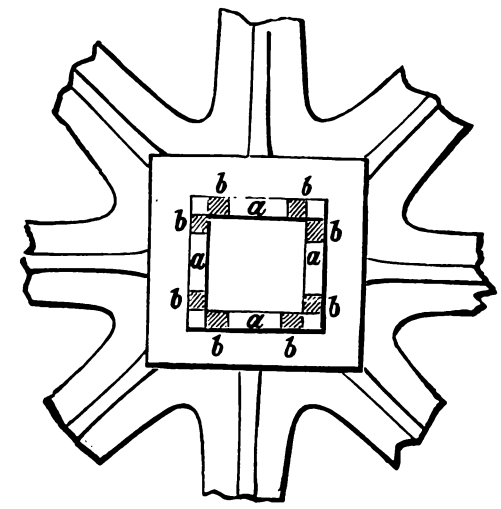

Fig. 391.

being a sliding fit, they perform driving duty in the same manner as a feather which fits on the sides A, D in Fig. 393, but are clear either top or bottom. In the figure the feather is supposed to be fast in the hub and therefore free at C, but were it fast in the shaft it would be free on the top face.

Fig. 394 represents a shaft held by a single set screw, the strain being in the direction of the arrow; hence the driving duty is performed by the end of the set screw and the opposite half circumference of the bore and shaft. On account, however, of the small area of surface of the set screw point the metal of the shaft is apt, under heavy duty and when the direction of shaft rotation is periodically reversed, to compress (as will also the set screw point

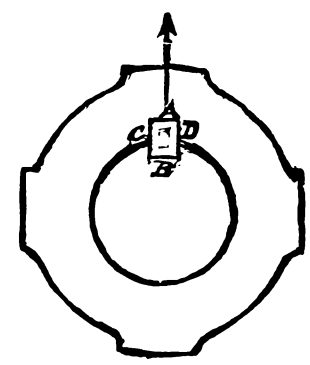

Fig. 392.

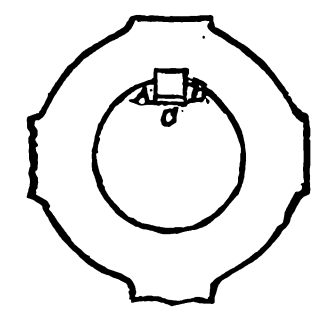

Fig. 393.

unless it is of steel and hardened), permitting the grip to become partly released no matter how tightly the set screw be screwed home. On this account a taper key will, under a given amount of strain upon the hub, perform more driving duty, because the increased area of contact prevents compression. Furthermore, the taper key will not become loose even though it suffer an equal amount of compression. Suppose, for example, that a key be driven lightly to a fair seating, then all the rest of the distance to which the key is driven home causes the hub to stretch, as it were, and even though the metal of the key were to compress, the elasticity thus induced would take up the compression, preventing the key from working loose. It is obvious, then, that set screws are suitable for light duty only, and keys for either heavy or light duty. It is advanced by some authorities that keys are more apt

to cause a wheel or pulley to run out of true than a set screw, but such is not the case, because, as shown in Figs. 392 and 394, both of them tend to throw the wheel out of true in one direction ; but a key may be made with proper fitting to cause a wheel to run true that would not run true if held by a set screw, as is explained in the directions for fitting keys given in examples in vice work.

If two set screws be used they should both be in the same line (parallel to the shaft axis) or else at a right angle one to the other as in Fig. 395, so that the shaft and bore may drive by frictional contact on the side opposite to the screws. Theoretically, the contact of their surface will be at a point only, but on account of the elasticity of the metal the contact will spread around the bore in the arc of a circle, the length of the arc depending upon the

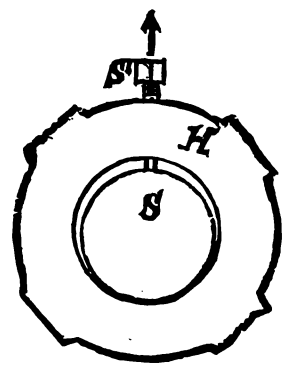

Fig. 394.

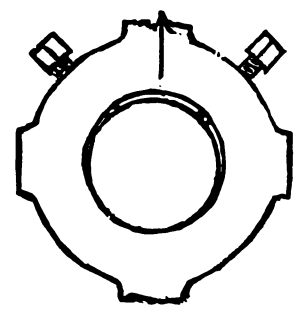

Fig. 395.

closeness of fit between the pulley bore and the shaft. If the bore is a close fit to the shaft it is by reason of the elasticity of the metal relieved of contact pressure on the side on which the set screw or key is to an amount depending upon the closeness of the bore fit, but this will not, in a bore or driving fit to the shaft, be sufficient to set the wheel out of true.

If two set screws are placed diametrally opposite they will drive by the contact of their ends only, and not by reason of their inducing frictional contact between the bore and the shaft.

A very true method of securing a hub to a shaft is to bore it larger than the shaft and to a taper of one inch to the foot. A bushing is then bored to fit the shaft and turned to the same taper as the hub is turned, but left, say, $\frac{1}{100}$ inch larger in diameter and $\frac{1}{4}$ or $\frac{3}{8}$ inch longer. The bush is then cut into three pieces and these pieces are driven in the same as keys, but care must be taken to drive them equally to keep the hub true.

Feathers are used under the following conditions: When the wheel driven by a shaft requires to slide along the shaft during its rotation, in which case the feather is fast in the wheel and the shaft is provided with a keyway or spline (as it is termed when

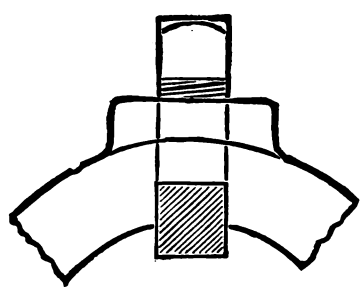

Fig. 396.

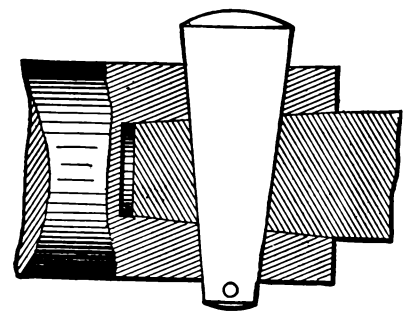

Fig. 397.

the sliding action takes place), of the necessary length, the sides of the feather being a close but sliding fit in the spline while fixed fast in the wheel.

It is obvious that the feather might extend along the shaft to the requisite distance and the spline or keyway be made in the wheel: but in this case the work is greater, because the shaft would still require grooving to receive the feather, and the feather, instead of being the simple width of the wheel, would require to be the width of the wheel longer than the traverse of the wheel on the shaft. Nor would this method be any more durable, because the keyway's bearing length would only be equal to the width of the wheel.

When a feather is used to enable the easy movement of a wheel from one position to another, a set screw may be used to fix the wheel in position through the medium of the feather, as is shown in Fig. 396.

Through keys and keyways are employed to lock two pieces, and sometimes to enable the taking up of the wear of the parts. Fig. 397 represents an example in which the key is used to lock a taper shaft end into a socket by means of a key passing through both of them. When the keyway is completely filled by the key, as in the figure, it is termed a solid key and keyway, indicating that there is no draft to the keyway. Fig. 398 represents a key and keyway having draft. One edge, A C, of the key binds against the socket edges only, and the other edge E binds against the edge B of the enveloped piece or plug, so that by driving in the key with a hammer the two parts are forced together. The space or distance between the edge D and the key, and between edges E and F, is termed the draft. The amount of this draft is made equal to the taper of the key ; hence, when the key is driven in so that its head comes level with the socket or work surface, the draft will be all taken up and the key will fill the keyway.

Draft is given to ensure all the strain of the key forcing the parts together, to enable the key to be driven in to take up any wear, and to adjust movable parts, as straps, journal boxes or brasses, etc. When the bore of the socket and the end of the rod are parallel, the end of the rod F, Fig. 399, should key firmly against the end E of the socket, while the end D of the socket should be clear of the shoulder on the rod ; otherwise, instead of the key merely compressing the metal at F, it will exert a force tending to burst the end F from G of the rod ; furthermore, the area of contact at the shoulder D being small, the metal would be apt to compress and the key would soon come loose.

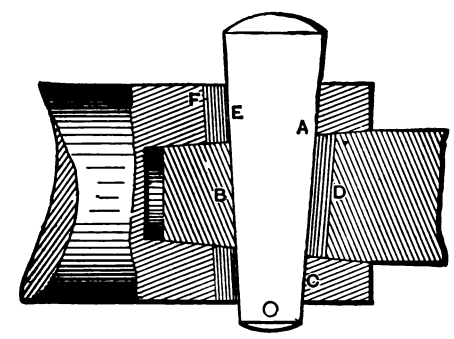

Fig. 398.

In some cases two keys are employed passing through a sleeve, the arrangement being termed a coupling, or a butt coupling.

The usual proportions for this class of key, when the rod ends and socket boxes are parallel, is width of key equals diameter of socket bore, thickness of key equals one-fourth its width, with a taper edgeways of about $\frac{1}{4}$ inch in 10 inches of length.

As the keys in through keyways often require to be driven in very tight, and as the parts keyed together often remain a long time without being taken apart, and in some situations become rusted together, it is often a difficult matter to get them apart. First, it is difficult to drive the key out, because the blows swell the end of it so that it cannot pass through the keyway; and secondly, driving the socket off the plug of the two parts keyed together often damages the socket and may bend the rod to which it is keyed. Furthermore, as the diameter of the socket is usually not more than half as much again as the diameter of the plug, misdirected blows are apt to fall upon the rod instead of upon the socket end and damage it. Hence, a piece of copper, of lead, or a block of wood should always be placed against the socket end to receive the hammer blows. To force a plug out of a socket, we may use reverse keys. These are pieces formed as shown in Fig. 400. A A and B B are edge and face views, respectively, of two pieces of metal, formed as shown, which are inserted in the keyway as shown in Fig. 401, in which A is the plug or taper end of a rod, and B the socket ; C is one and D the other of the reverse keys ; while E is a taper key inserted between them. By driving E through the keyway, A and B are forced apart. The action of the reverse keys is simply to reverse the direction of the draft in the keyway so that the pressure due to driving E through the keyway is brought to bear upon the rod end in

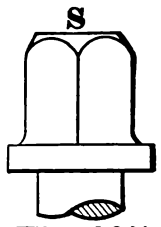

Fig. 405

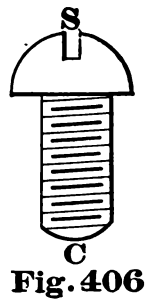

Fig. 406

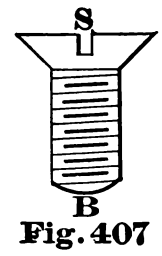

Fig. 407

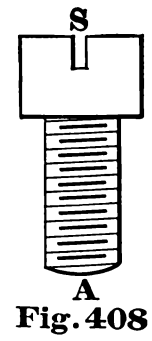

Fig. 408

Fig. 409

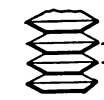
Fig. 410

Fig. 411

Fig. 412

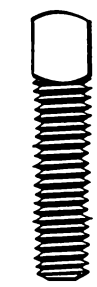
Fig. 414

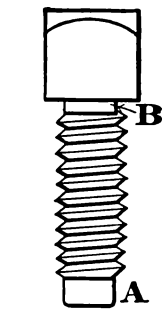

Fig. 413

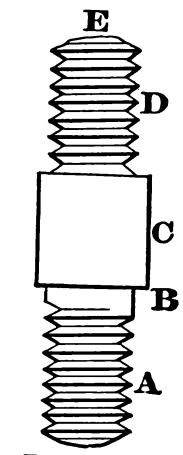

Fig. 415

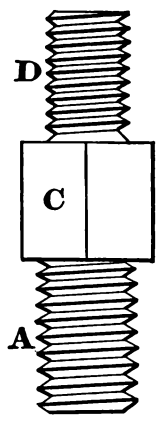

Fig. 416

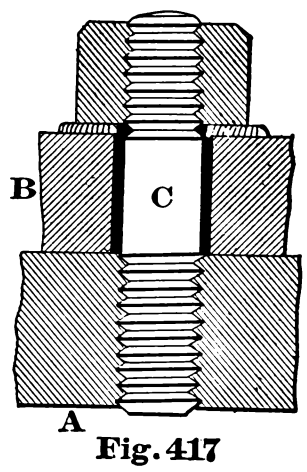

Fig. 417

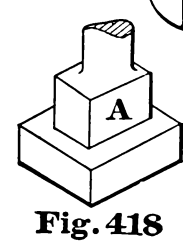

Fig. 418

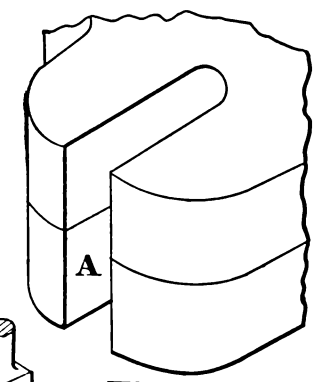

Fig. 419

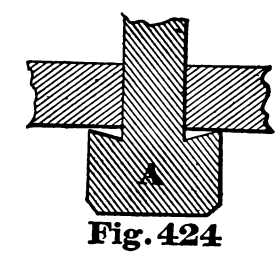

Fig. 424

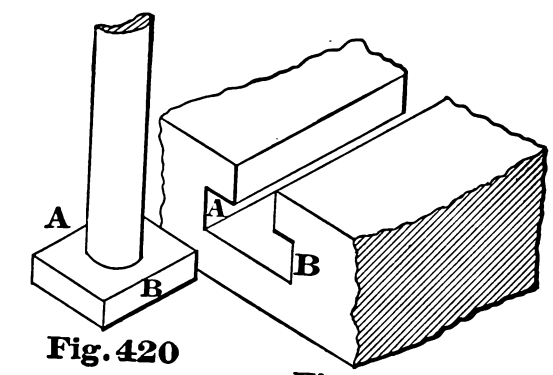

Fig. 420
Fig. 421

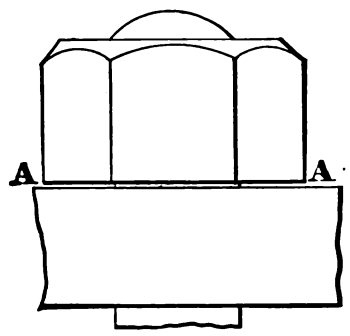

Fig. 427

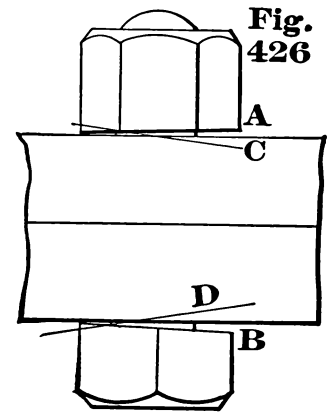

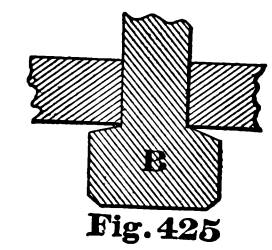

Fig. 425

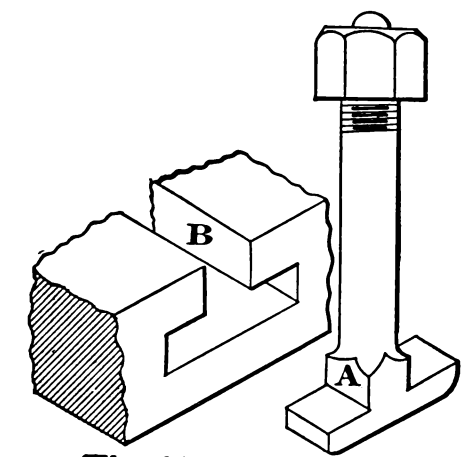

Fig. 423
Fig. 422

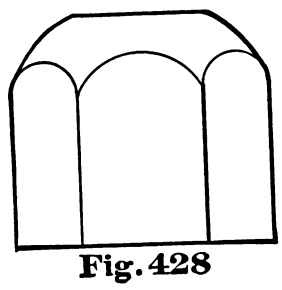
Fig. 428

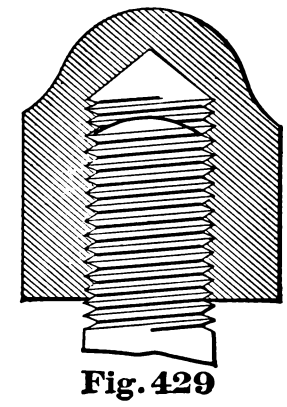
Fig. 429

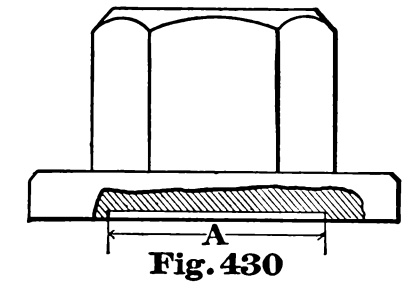

Fig. 430

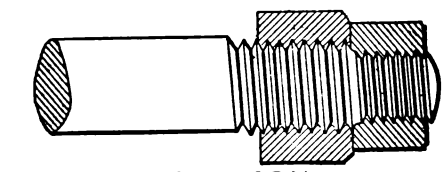
Fig. 435

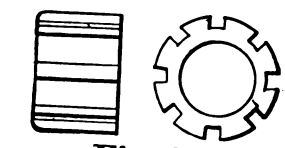
Fig. 433

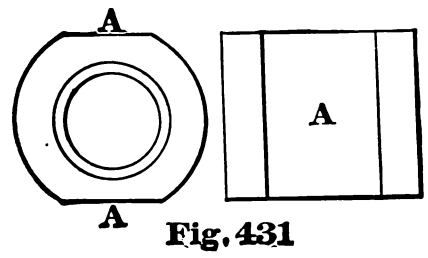

Fig. 431

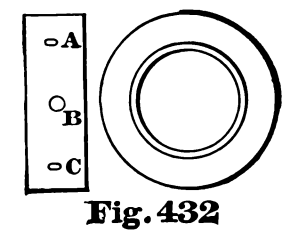

Fig. 432

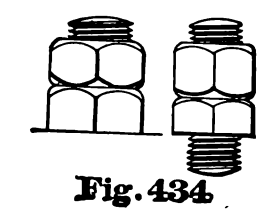
Fig. 434

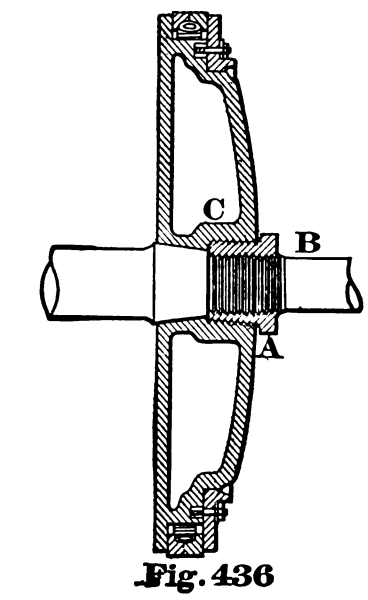

Fig. 436

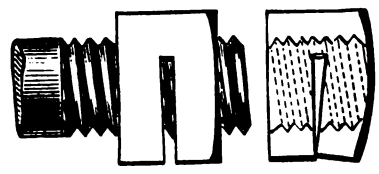

Fig. 437.

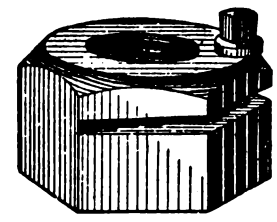

Fig. 438.

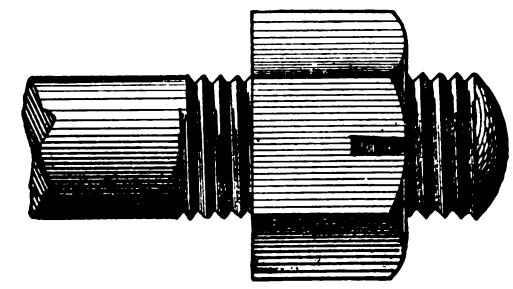

Fig. 439.

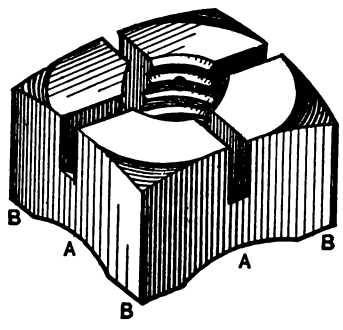

Fig. 440.

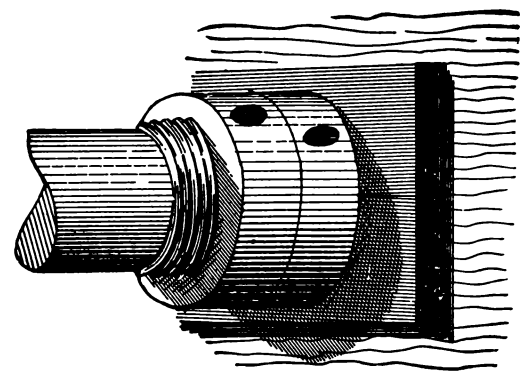

Fig. 441.

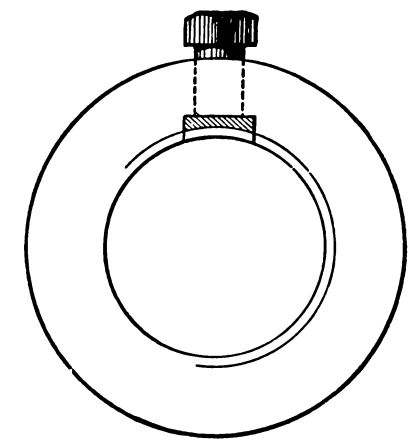

Fig. 442.

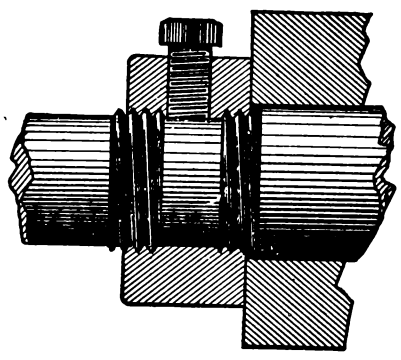

Fig. 443.

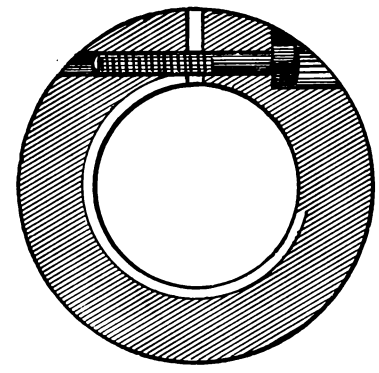

Fig. 444.

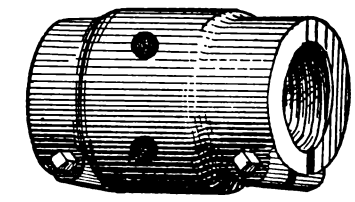

Fig. 445.

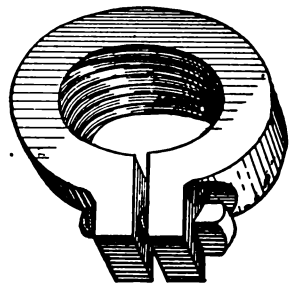

Fig. 446.

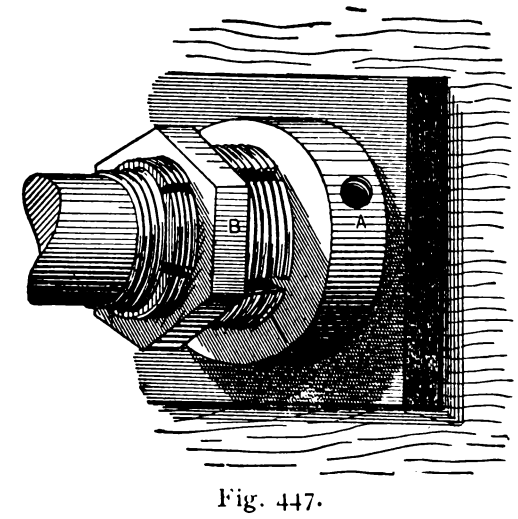

Fig. 447.

the part that was previously the draft side of the keyway, and in like manner upon the keyway in the socket on the side that previously served as draft.

Reverse keys are especially serviceable to take off crossheads, piston heads, keyed crankpins, and parts that are keyed very firmly together.

Hubs are sometimes fastened to their shafts by pins passing through both the hub and the shaft. These pieces may be made parallel or taper, but the latter obviously secures the most firmly. If the pin is located as in Fig. 402 its resisting strength is that due to its cross sectional area at A and B. But if the pin be

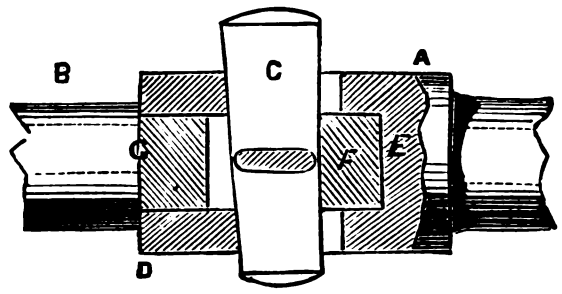

Fig. 399.

located as in Fig. 403 it secures the hub more firmly, because it draws the bore (on the side opposite to the pin) against the shaft, causing a certain amount of friction, and, furthermore, the area resisting the pressure of the hub is increased, and that pressure is to a certain degree in a crushing as well as a shearing direction.

If unturned pins are used and the holes are rough or drilled but not reamed, it is better that two sides of the pin should be eased off with a file or on the emery wheel, so that all the locking pressure of the pin shall fall where it is the most important that it should—that is, where it performs locking duty. This is shown in Fig. 404, the hole being round and the pin being very slightly oval (not, of course, so much as shown in the drawing), so that it will bind at A B, and just escape touching at C D, so that all the pressure of contact is in the direction to bind the hub to the shaft.

SCREWS, STUDS, AND BOLTS.—Referring to Plate VI.–A., Cap screws are made with heads either hexagonal, square, or round, and sometimes with a round collar, as in Fig. 405. Three forms of what are called machine screws are shown in Figs. 406, 407, 408, S representing saw slots to receive a screwdriver. The forms of the heads are as follows : that in Fig. 408 being termed a fillister, Fig. 407, a countersink, and Fig. 406 a roundhead.

When the end of a screw abuts against the work to secure it in position it is termed a set screw ; example being given in Figs. 409, 410, 411, 412. That at Fig. 409 seats in a countersink in the shaft ; that at Fig. 410 abuts flat upon the shaft, its defect being

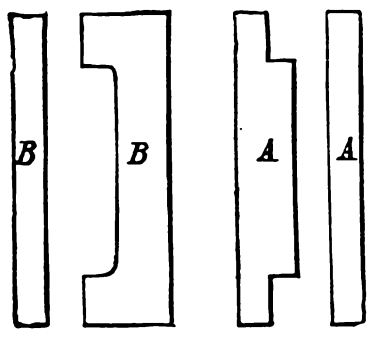

Fig. 400.

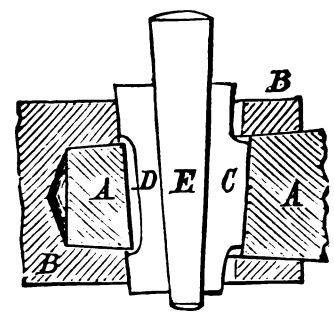

Fig. 401.

that it is apt to spread, as shown in Fig. 411, which renders it difficult to either tighten or loosen ; Fig. 412 is countersunk at the end, as denoted by the dotted curve, which causes it to hold firmest and be more readily moved for a close adjustment of position. The ends of all set screws should—if of steel—be hardened, and if of iron, case hardened.

The ordinary form of set screw is shown by Fig. 414. The set screw shown in Fig. 413 sets into a parallel hole as indicated at A and is recessed at B, so that its full length may screw into the work. Fig. 415 represents a stud such as is used for the bolting down of cylinder covers. The part B is made large to give strength.

The cylindrical part C passes through the hole in the cover (B, Fig. 417) and may be made square, as in Fig. 416, to receive a wrench when removal is necessary. A washer may be inserted under the upper or binding nut to distribute the pressure, as in Fig. 417. Applications of bolt heads that will prevent the bolts from turning around when inserted in slots are shown in Figs. 418, 419, 420, 421, 422, and 423, the application being obvious. Bolts whose heads abut against the work, as in Figs. 424 and 425,

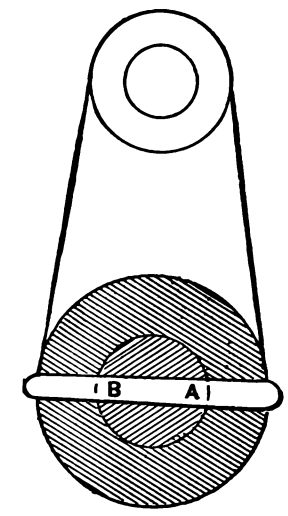

Fig. 402.

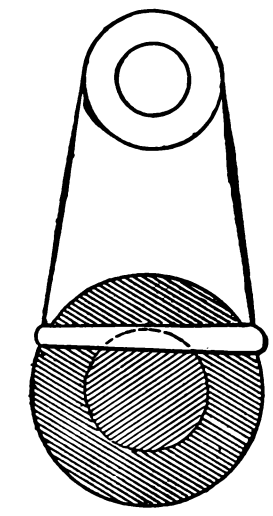

Fig. 403.

should be rather undercut as at A than rounded as at B, since they will bed fairer upon the work and are less likely to turn in their holes when either screwed up or unscrewed. When such bolts or their nuts do not bed properly, as in Fig. 426, screwing them firmly up is apt to cause the bolt head B to crack and the nut A to twist off the screwed end of the bolt.

To prevent the corners of nuts from marking the surface of polished work, it is sometimes the custom to cut away the hexagon at the corners A A, Fig. 427, but this makes it appear that the nut does not bed properly.

Nuts that are unusually deep are sometimes rounded off at the top, as in Fig. 428, or, when the bolt does not pass through the nut, shaped as in Fig. 429. When the hole through which the bolt passes is considerably larger in diameter than the bolt, the flange nut, Fig. 430, may be employed. Circular nuts are sometimes employed, if the strain is small and lightness is desirable, especially if they are to revolve at high speed. Fig. 431 represents the flat sides of a circular nut to receive the wrench. In other cases,

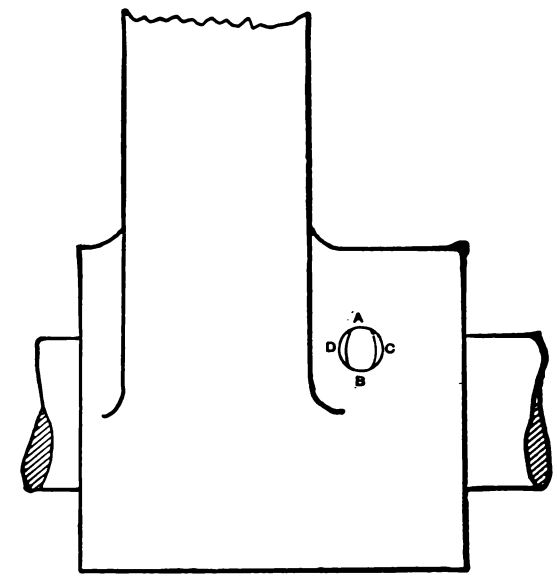

Fig. 404.

circular nuts are provided with pinholes, as at A, B and C, Fig. 432, or with grooves or slots, as in Fig. 433.

To prevent nuts from slackening back upon their bolts, as they are apt at times to do when the bolt is subject to jar or vibration, two nuts are employed ; one screwed down upon the other, as in Fig. 434. Sometimes they are made of equal thickness, while in others, the lower nut is made the thinnest, upon the theory that the top nut, which is termed the check nut, takes all the strain.

Professor John E. Sweet has pointed out that the perfect check nut should be of finer pitch, as in Fig. 435, in order that it may effectively check the backward motion of the lower nut.

Differential screws for the purpose of securely locking two parts together act upon a principle which may be explained with reference to Fig. 436. The nut A contains an internal thread to screw upon the rod and an external one to screw into the work—in this case a marine engine piston head—but the internal thread in the work and that on the rod differ in pitch by a certain amount, as, say, one-tenth of the pitch. The nut is furnished with a hexagonal head and when screwed home draws the two parts together with the same power as a screw having a pitch equal to the difference between the two pitches.

When putting the parts together, the nut is first screwed upon the rod a depth of two or three threads, and then screwed into the enveloping piece or outside thread as far as it will go with a suitable wrench.

Plate VII. represents different methods of preventing nuts from slackening back or of making fine end adjustments.

In Fig. 437 is shown a nut split on one side. After being threaded the split is closed by hammer blows, appearing as shown in the detached nut. Upon screwing the nut upon the bolt the latter forces the split nut open again by thread pressure, and this pressure locks the nut. Now there will be considerable elasticity in the nut, so that if the thread compresses on its bearing area, this elasticity will take up the wear or compression and still cause the threads to bind. Sometimes a set screw is added to the split, as in Fig. 438, in which case the split need not be closed with the hammer.

Another method is to split the nut across the end as shown in Fig. 439, tapping the nut with the split open, then closing the split by hammer blows. Here as before the nut would pass easily upon the bolt until the bolt reached the split, when the subsequent threads would bind. In yet another design, shown in Fig. 440, four splits are madé across the end, while the face of the nut is hollowed, so that a flat place near each corner meets the work surface. The pressure induced on these corners by screwing the nut home is relied on in this case to spring the nut, causing the thread at the split end to close upon and grip the bolt thread.

Check nuts are sometimes employed to lock in position a screw that is screwed into the work; thus screws that require to be operated to effect an adjustment of length (as in the case of eccentric rods and eccentric straps) are supplied with a check nut, the object being to firmly lock the screw in its adjusted position.

The following are forms of nuts employed to effect end adjustments of length, or to prevent end motion in spindles or shafts that rotate in bearings.

Fig. 441 shows two cylindrical check nuts, the inner one forming a flange for the bearing. The objection to this is that in screwing up the check nut the adjustment of the first nut is liable to become altered in screwing up the second one, notwithstanding that the first be held by a lever or wrench while the second is screwed home.

Another method is to insert a threaded feather in the adjustment nut having at its back a set screw to hold the nut in its adjusted position, as in Fig. 442. In this case the protruding head of the set screw is objectionable. In place of the feather the thread of the spindle may be turned off and a simple set screw employed, as in Fig. 443; here again, however, the projecting set screw head is objectionable. The grip of an adjustment nut may be increased by splitting it and using a pinching or binding screw, as in Fig. 444; in which case the bore of the thread is closed by the screw, and the nut may be countersunk to obviate the objection of a projecting head. For adjusting the length of rods or spindles a split nut with binding screws, such as shown in Fig. 445, is an excellent and substantial device. The bore is threaded with a right-hand thread at one end and a left-hand one at the other, so that by rotating the nut the rod is lengthened or shortened according to the direction of rod rotation. Obviously a clamp nut of this class, but intended to take up lost motion or effect end adjustment, may be formed, as in Fig. 446, but the projecting ears or screw are objectionable.

Where there is sufficient length to admit it, an adjustment nut, such as in Fig. 447, is a substantial arrangement. The nut A is threaded on the spindle and has a taper threaded split nut to receive the nut B. Nut A effects the end adjustment by screwing upon the spindle, and is additionally locked thereon by screwing B up the taper split nut, causing it to close upon and grip the spindle.

Chapter VI.—THE LATHE.

THE lathe may be justly termed the most important of all metal-cutting machine tools. Not only on account of the rapidity of its execution which is due to its cutting continuously while many others cut intermittently, but also because of the great variety of the duty it will perform to advantage. In the general operations of the lathe, drilling, boring, reaming, and other processes corresponding to those performed by the drilling machine, are executed, while many operations usually performed by the planing machine, or planer as it is sometimes termed, may be so efficiently performed by the lathe that it sometimes becomes a matter of consideration whether the lathe or the planer is the best machine to use for the purpose.

The forms of cutting tools employed in the planer, drilling machine, shaping machine, and boring machine, are all to be found among lathe tools, while the work-holding devices employed on lathe work include, substantially, very nearly all those employed on all other machines and, in addition, a great many that are peculiar to itself. In former times, and in England even at the present day, an efficient turner (as a lathe operator is termed),

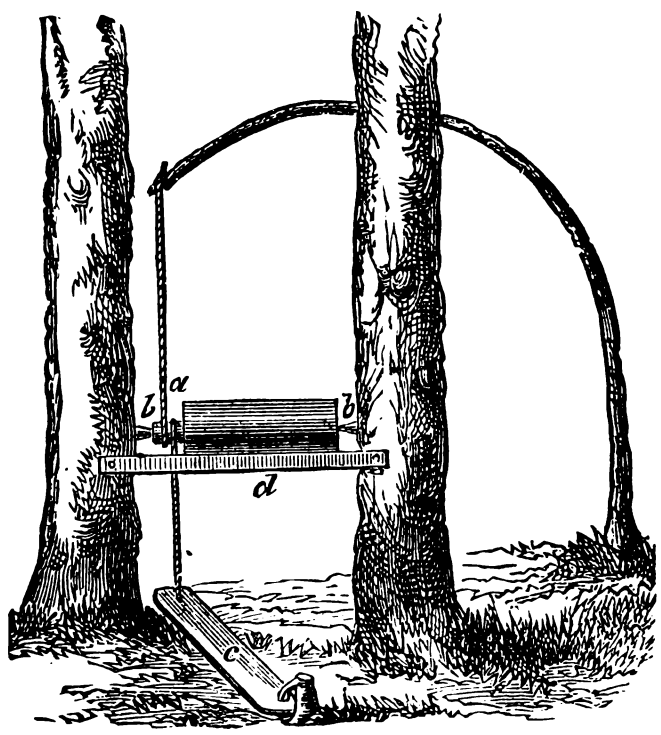

Fig. 448.

or lathe hand, is deemed capable of skilfully operating a planer, boring machine, screw-cutting machine, drilling machine, or any of the ordinary machine tools, whereas those who have learned to operate any or all of those machine tools would prove altogether inefficient if put to operate a lathe.

In almost all the mechanic arts the lathe in some form or other is to be found, varying in weight from the jewellers' lathe of a few pounds to the pulley or fly-wheel lathe of the engine builder, weighing many tons.

The lathe is the oldest of machine tools and exists in a greater variety of forms than any other machine tool. Fig. 448 represents a lathe of primitive construction actually in use at the present day, and concerning which the "Engineering" of London (England), says, "At the Vienna Exhibition there were exhibited wood, glasses, bottles, vases, &c., made by the Hucules, the remnant of an old Asiatic nation which had settled at the time of the general migration of nations in the remotest parts of Galicia, in the dense forests of the Carpathian Mountains. The lathe they are using has been employed by them from time immemorial. They make the cones *b*,*b* (of maple) serve as centres, one being fixed and the other movable (longitudinally). They rough out the work with a hatchet, making one end *a* cylindrical, to receive the rope for giving rotary motion. The cross-bar *d* is fastened to the trees so as to form a rest for the cutting tool, which consists of a chisel." C, of course, is the treadle, the lathe or pole being a sapling.

In other forms of ancient lathes a wooden frame was made to receive the work-centres, and one of these centres was carried in a block capable of adjustment along the frame to suit different lengths of work. In place of a sapling a pole or lath was employed, and from this lath is probably derived the term lathe.

It is obvious, however, that with such a lathe no cutting operation can be performed while the work is rotating backwards, and further, that during the period of rest of the cutting tool it is liable to move and not meet the cut properly when the direction of work rotation is reversed and cutting recommences, hence the operation is crude in the extreme, being merely mentioned as a curiosity.

The various forms in which the lathe appears in ordinary machine shop manipulation may be classified as follows:—

The *foot lathe*, signifying that the lathe is driven by foot.

The *hand lathe*, denoting that the cutting tools must be held in the hands, there being no tool-carrying or feeding device on the lathe.

The *single-geared lathe*, signifying that it has no gear-wheels to reduce the speed of rotation of the live spindle from that of the cone.

The *back-geared lathe*, in which gear-wheels at the back of the headstock are employed to reduce the speed of the lathe.

The *self-acting lathe*, or *engine lathe*, implying that there is a slide rest actuated automatically to traverse the tool to its cut or feed.

The *screw-cutting lathe*, which is provided with a *lead* screw, by means of which other screws may be cut.

The *screw-cutting lathe with independent feed*, which denotes that the lathe has two feed motions, one for cutting threads and another for ordinary tool feeding; and

The *chucking lathe*, which implies that the lathe has a face plate of larger diameter than usual, and that the bed is somewhat short, so as to adapt it mainly to work held by being chucked, that is to say, held by other means than between the lathe centres.

There are other special applications of the lathe, as the boring lathe, the grinding lathe, the lathe for irregular forms, &c., &c.

This classification, however, merely indicates the nature of the lathe with reference to the individual feature indicated in the title; thus, although a foot lathe is one run by foot, yet it may be a single or double gear (back-geared) lathe, or a hand or self-acting lathe, with lead screw and independent feed motion.

Again, a hand lathe may have a hand slide rest, and in that case it may also be a back-geared lathe, and a back-geared lathe may have a hand slide rest or a self-acting feed motion or motions.

Fig. 449 represents a simple form of foot lathe. The office of the shears or bed is to support the headstock and tailstock or tailblock, and to hold them so that the axes of their respective spindles shall be in line in whatever position the tailstock may be placed along the bed. The duty of the headstock is to carry the live spindle, which is driven by the cone, the latter being connected by the belt to the wheel upon the crank shaft driven by the crank hook and the treadle, which are pivoted by eyes W to the rod X, the operation of the treadle motion being obvious. The work is shown to be carried between the live centre, which is fitted to the live spindle, and the dead centre fitting into the tail spindle, and as it has an arm at the end, it is shown to be driven by a pin fixed in the face plate, this being the simplest method of holding and driving work. The lathe is shown provided with a hand tool rest, and in this case the cutting tools are supported upon the top of the tool rest N, whose height may be adjusted to bring the tool edge to the required height on the

work by operating the set screw S, which secures the stem of N in the bore of the rest.

To maintain the axes of the live and dead spindles in line, they are fitted to a slide or guideway on the shears, the headstock being fixed in position, while the tailstock is adjustable along the shears to suit the length of the work.

To lock the tailstock in its adjusted position along the shears, it has a bolt projecting down through the plate C, which bolt receives the hand nut D. To secure the hand rest in position at any point along the shears, it sets upon a plate A and receives a bolt whose head fits into a T-shaped groove, and which, after passing through the plate P receives the nut N, by which the rest is secured to the shears.

To adjust the end fit of the live spindle a bracket K receives an adjusting screw L, whose coned end has a seat in the end J of the live spindle, M being a check nut to secure L in its adjusted position.

The sizes of lathes are designated in three ways, as follows :— First by the *swing* of the lathe and the total length of the bed, shown by dotted lines. The live spindle is hollow, so that if the work is to be made from a piece of rod and held in any of the forms of chucks to be hereafter described, it may be passed through the spindle, which saves cutting the rod into short lengths. The front bearing of the headstock has two brasses or boxes, A and B, set together by a cap C.

The rear bearing has also a bearing box, the lower half D being threaded to receive an adjustment screw F and check nut G to adjust the end fit of the spindle in its bearings. In place of grooved steps for the belt the cone has flat ones to receive a flat belt.

The tail spindle is shown, in Fig. 451, to be operated by a screw H, having journal bearing at I, and threaded into a nut fast in the tail spindle at J. To hold the tail spindle firmly the end of the tail stock is split, and the hand screw K may be screwed up to close the split and cause the bore at L to clasp the tail spindle at that end.

To lock the tail stock to the shears the bolt M receives the lever N at one end and at the other passes through the plate or clamp

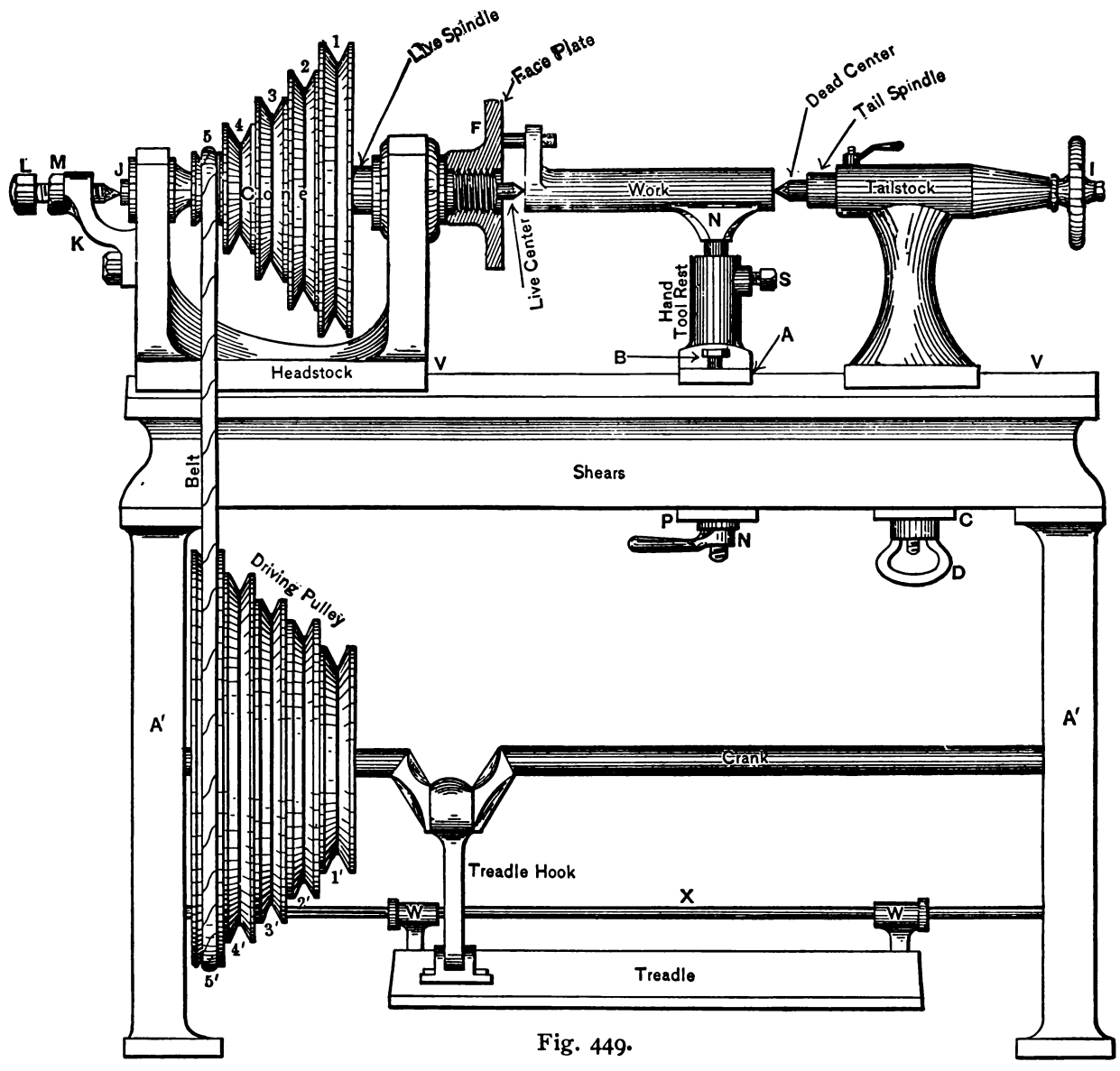

Fig. 449.

the term *swing* meaning the largest diameter of work that the lathe is capable of revolving or swinging. The second is by the *height of the centres* (from the nearest corner of the bed) and the length of the shears. The height of the centres is obviously equal to half the swing of the lathe, hence, for example, a lathe of 28-inch swing is the same size as one of 14-inch centres. The third method is by the swing or height of centres and by the greatest length of work that can be held between the lathe centres, which is equal to the length of the bed less the lengths of the head and tailstock together.

The effective size of a lathe, however, may be measured in yet another way, because since the hand rest or slide rest, as the case may be, rests upon the shears or bed, therefore the full diameter of work that the lathe will swing on the face plate cannot be held between the centres on account of the height of the body of the hand rest or slide rest above the shears.

Fig. 450 shows a hand lathe by F. E. Reed, of Worcester, Massachusetts, the mechanism of the head and tail stock being O, and receives the nut P, so that the tail stock is gripped to or released from the shears by operating N in the necessary direction. The hand rest, Fig. 452, has a wheel W in place of a nut, which dispenses with the use of a wrench.

What are termed bench lathes are those having very short legs, so that they may for convenience be mounted on a bench or fastened to a second frame, as shown in Fig. 453.

It is obvious that when work is turned by hand tools, the parallelism of the work depends upon the amount of metal cut off at every part of its length, which to obtain work of straight outline, whether parallel or taper, involves a great deal of testing and considerable skill, and to obviate these disadvantages various methods of carrying and accurately guiding tools are employed. The simplest of these methods is by means of a slide rest, such as shown in Fig. 454.

The tool T is carried in the tool post P, being secured therein by the set screw shown, which at the same time locks the tool post to the upper slider. This upper slider fits closely to the

cross slide, and has a nut projecting down into the slot shown in the same, and enveloping the cross feed screw, whose handle is shown at C, so that operating C traverses the upper slider on the cross slide and regulates the depth to which the tool enters the work, or in other words, the depth of cut.

The cross slide is formed on the top of the lower slider, which has beneath a nut for the feed screw, whose handle is shown at A, hence rotating A will cause the lower slider to traverse along the lower slide and carry the tool along the work to its cut. To maintain the fit of the sliders to the slides a slip of metal is inserted, as at *e* and at *c*, and these are set up by screws as at *f*,*f* and *b*,*b*.

The lower or feed traverse slide is pivoted to its base B, so that it may be swung horizontally upon the same, and is provided with means to secure it in its adjusted position, which is necessary to enable it to turn taper as well as parallel work. To set this lower slide to a given degree of angle it may be marked with a line and the edge of base B may be divided into degrees as shown at D.

When a piece of work is rotated between the lathe centres its axis of rotation may be represented by an imaginary straight line and the lower slides must, to obtain parallel work, be set parallel to this straight line, while for taper work the slide rest must be set at an angle to it. Now, in the form of slide rest shown in figure the cross slide is carried by the lower or feed

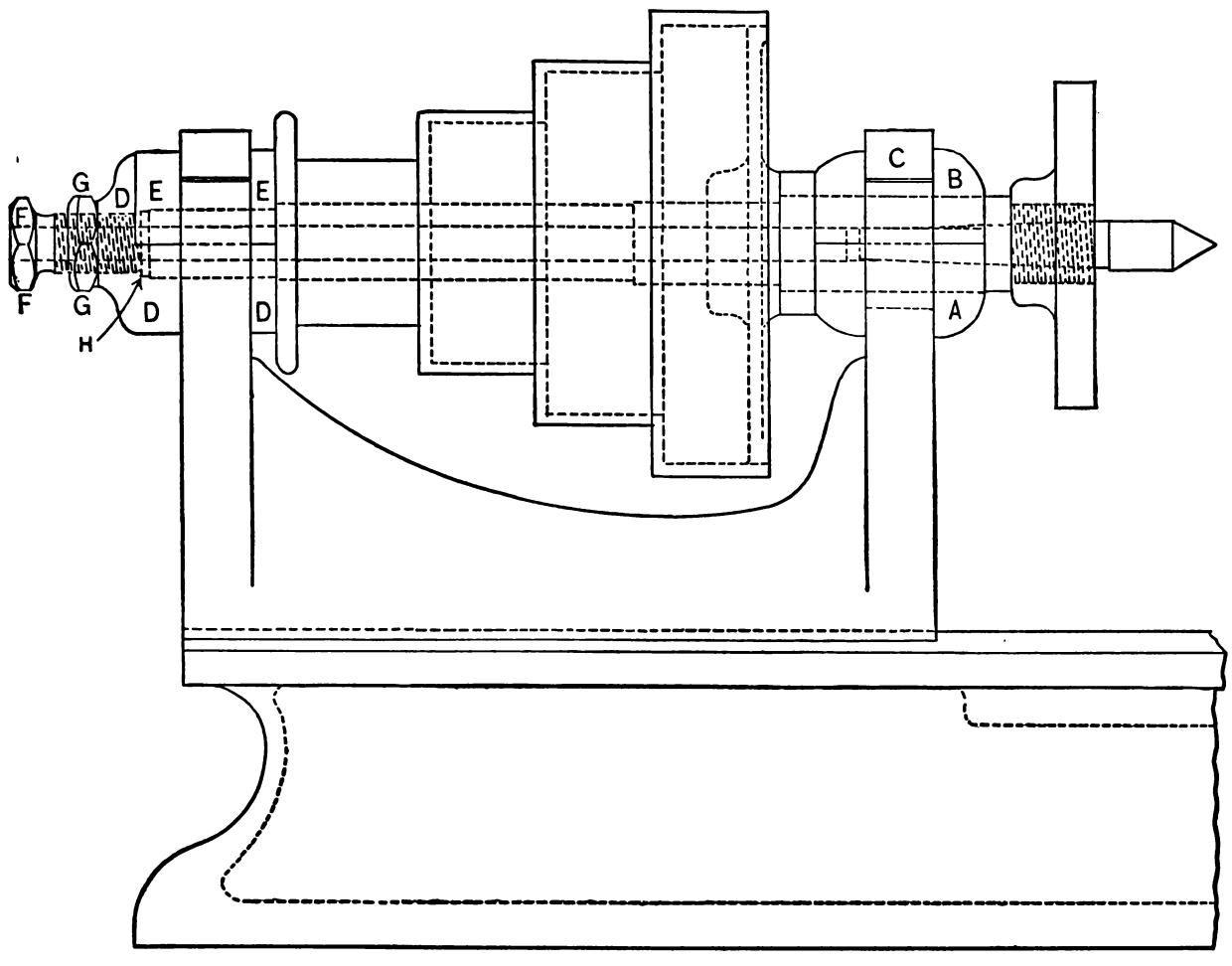

Fig. 450.

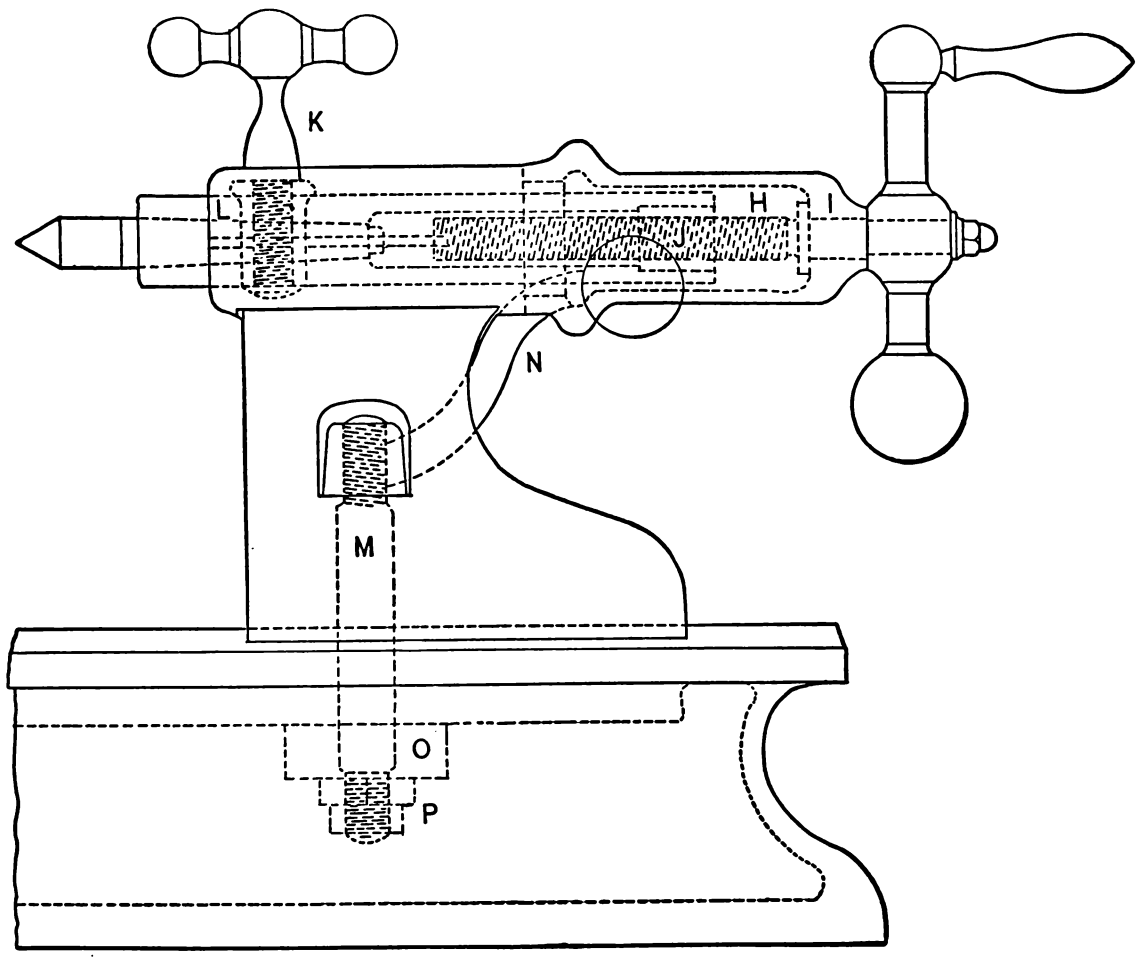

Fig. 451.

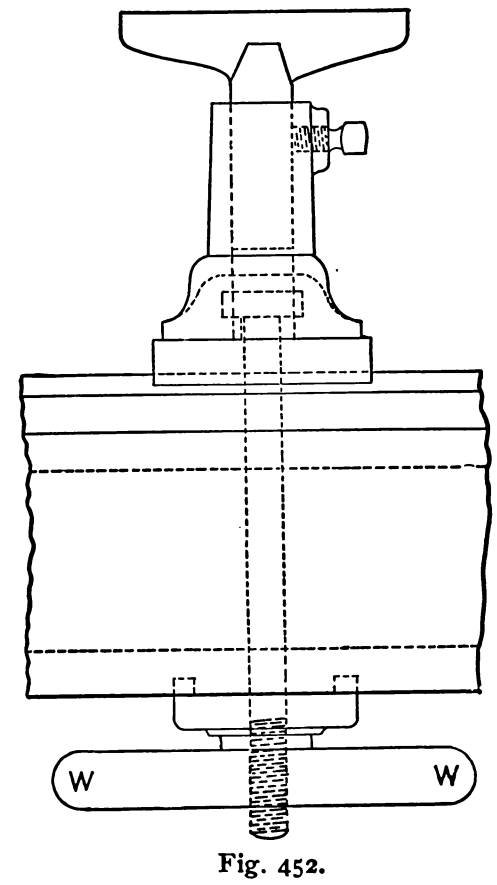

Fig. 452.

traverse slide, hence setting the lower slide out of parallel with the work axis sets the cross slide out of a right angle to the work axis, with the result that when a taper piece of work is turned that has a collar or flange on it, the face of that collar or flange will be turned not at a right angle to the work axis, as it should be, but at a right angle to the surface of the cone. Thus in Fig. 455, A, A,

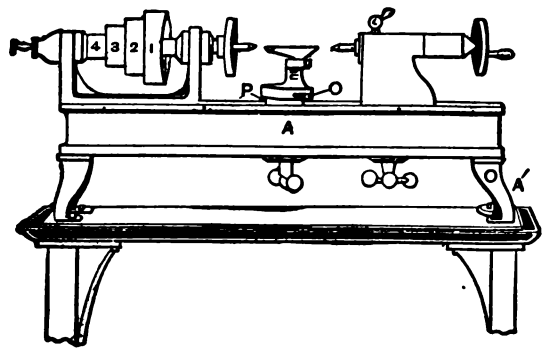

Fig. 453.

represents the axis of a piece of work, and the slide nut having been set parallel to the work axis, the face C will be at a right angle to the surface B or axis A, but with the slide nut set at an angle to turn the cone D, the cross slide will be at an angle to A, A, hence the face E will be under cut as shown, and at a right angle to the surface D instead of to A A.

This may be obviated by letting the cross slide be the lower one, as in the English form of slide rest shown in Fig. 458, in which the

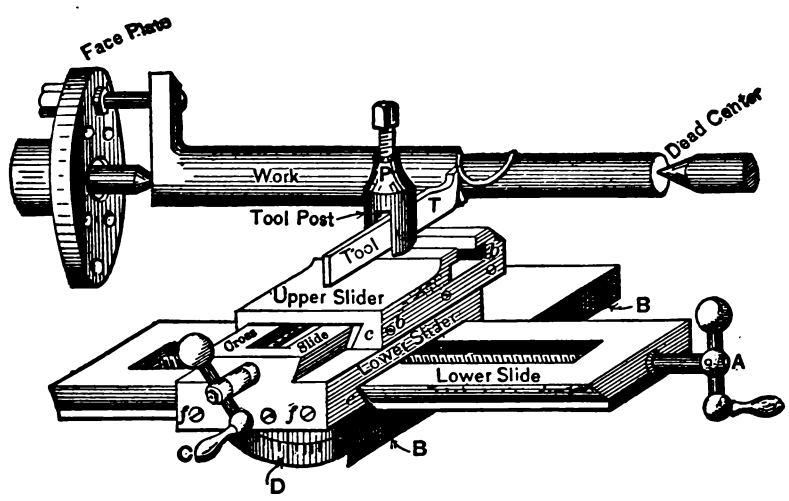

Fig. 454.

upper slide is pivoted at its centre to the cross slide, and may be swung at an angle thereto, and secured in its adjusted position by the bolt shown. The projection at the bottom of the lower slider fits between the shears of the lathe and holds the lower slider parallel with the line of lathe centres, which causes the slide rest to cut all faces at a right angle to the work axis, whether the feed traverse slide be set to turn parallel or taper. In either case, however, there is nothing to serve as a guide to set the feed traverse slide parallel to the work axis, and this must therefore be

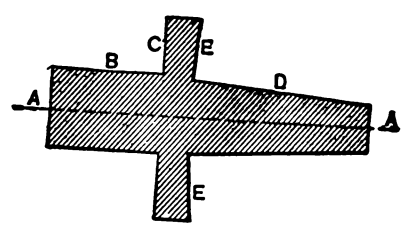

Fig. 455.

done as near as may be by the eye, and by taking a cut and testing the parallelism.

The rest may be set approximately true by bringing the operator's eye into such a position that the edge of the slide rest comes into line with the edge of the lathe shears, because that edge is parallel to the line of lathe centres, and therefore to the work axis.

In improved forms of slide rests for small lathes the screw for the longitudinal tool feed is in some cases placed beneath the front edge of the lower slide, as in Warner & Swasey's slide rest, shown in Fig. 456.

This possesses two advantages: First, that it keeps the screw clear of the tool cuttings, and prevents it from undue wear; and secondly, it brings the feed handle further away from the tail stock of the lathe, which is a great advantage on short work. Sometimes the screw is placed in the middle and the nut carried on the lower slider, as in Fig. 457.

Fig. 458 represents a form of slide rest for heavy facing and bor-

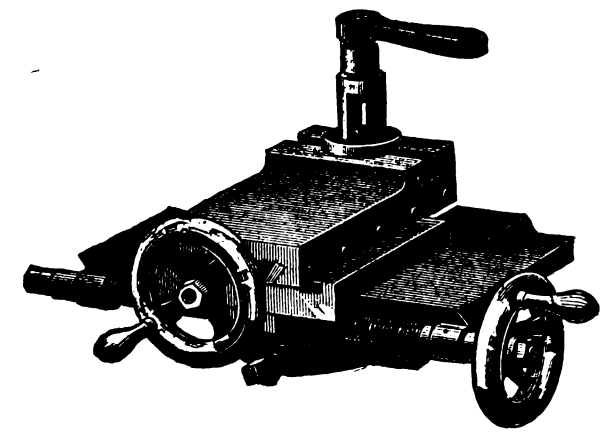

Fig. 456.

ing work, the end face A coming flush so that the tool does not overhang its base of support, and is carried firmly, which is of great importance in that class of work.

The gib *e*, Fig. 454, is sometimes placed on the front side of the slider, as in the figure, and at others on the back; when it is placed in the front the strain of the cut causes it to be compressed

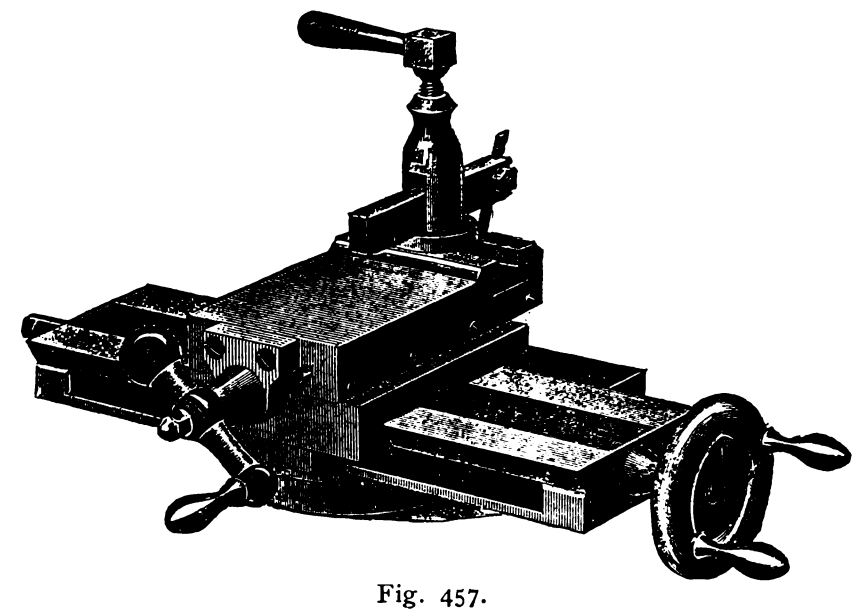

Fig. 457.

against the slide, and there is a strain placed upon the screws *f* which lifts them up, whereas, if placed on the other side the screws are relieved of strain, save such as is caused by the setting of the gib up.

On the other hand, the screws are easier to get at for adjustment if placed in front. When the screws *b* of the upper gib *c* (Fig. 454)

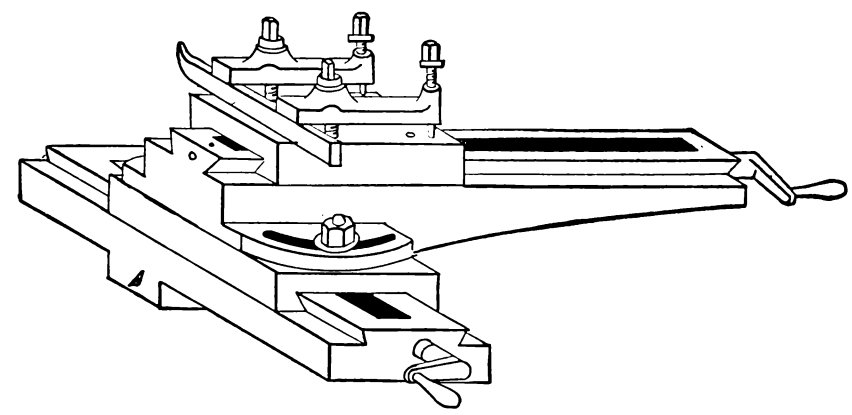

Fig. 458.

are on the right-hand side, as in that figure, there is considerable strain on the screws when a boring tool is used to stand far out, as for boring deep holes. On the other hand, however, the screws can be readily got at in this position, and may therefore be screwed up tightly to lock up the upper slider firmly to the cross slide, which will be a greater advantage in boring and also in facing operations. But the screws must not, in this case, have simple saw slot heads, such as shown on a

larger scale in Fig. 459, but should have square heads to receive a wrench, and if these four screws are used, the two end ones may be set to adjust the sliding fit of the slider, while the two middle ones may be used to set the slider form on its slide when either facing or boring. The corners of the gibs as well as those of the slider and slide may, with advantage, be rounded so that they may not become bruised or burred, and, furthermore, the slider is strengthened, and hence less liable to spring under the pressure of a heavy cut.

A slide rest for turning spherical work is shown in Fig. 460.

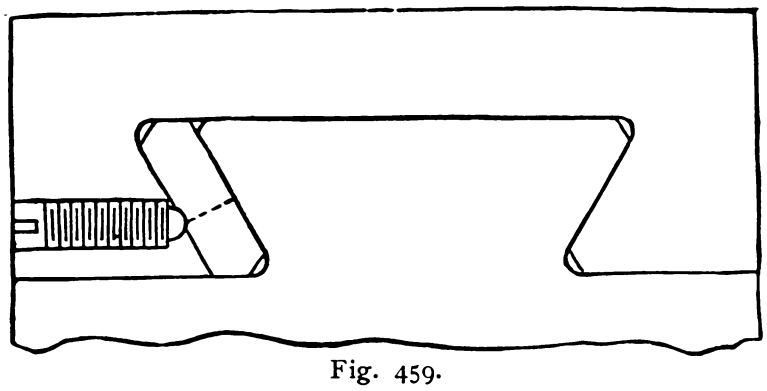

Fig. 459.

A is the lower slide way on which is traversed the slide B, upon which is fitted the piece C, pivoted by the bolt D; there is provided upon C a half-circle rack, shown at E, and into this rack gears a worm-wheel having journal bearing on B, and operated by the handle F. As F is rotated, C would rotate on D as a centre of motion; hence the tool point would move in an arc of a circle whose radius would depend upon the distance of the tool point from D as denoted by J, which should be coincident with the line of centres of the lathe.

The slide G is constructed in the ordinary manner, but the way on which it slides should be short, so as not to come into contact with the work. If the base slide way A be capable of being traversed along the lathe shears S S by a separate motion, then the upper slide way and slide may be omitted, G and C being in one piece. It is to be noted in a rest of this kind, however, that the tool must be for the roughing cut set too far from D to an amount equal to about the depth of cut allowed to finish with, and for the finishing cut to the radius of the finished sphere in order to obtain a true sphere, because if B be operated so that D does not stand directly coincident with the line of lathe centres, the centre of motion, or of the circle described by the tool point, will not be coincident with the centre on which the work rotates, hence the work though running true would not be a true sphere but an oval. This oval would be longest in the direction parallel with the line of centres whenever the pivot D was past the line of centres, and an oval of largest diameter at the middle or largest diameter

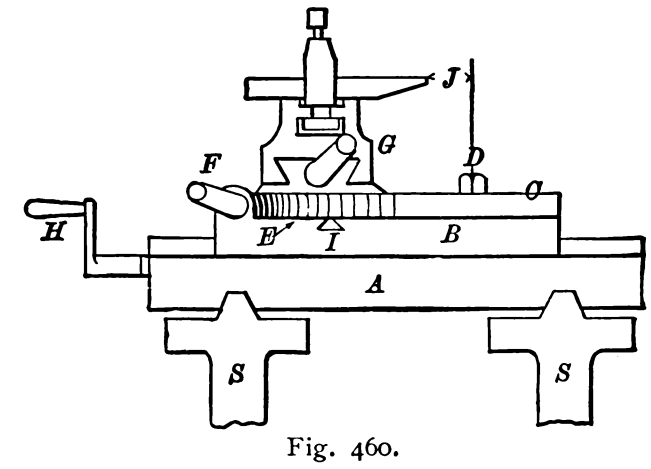

Fig. 460.

turned by the tool whenever the pivot D was on the handle H side of the line of centres. To steady C it may be provided with a circular dovetail, as shown at the end I, provision being made (by set screw or otherwise) for locking C in a fixed position when using the rest for other than spherical work.

To construct such a rest for turning curves or hollows whose outline required to be an arc of a circle, the pivot D would require to be directly beneath the tool post, which must in this case occupy a fixed position. The radius of the arc would here again be determined by the distance of the tool point from the centre of rotation of the pivot, or, what would be the same thing, from that of the tool post.

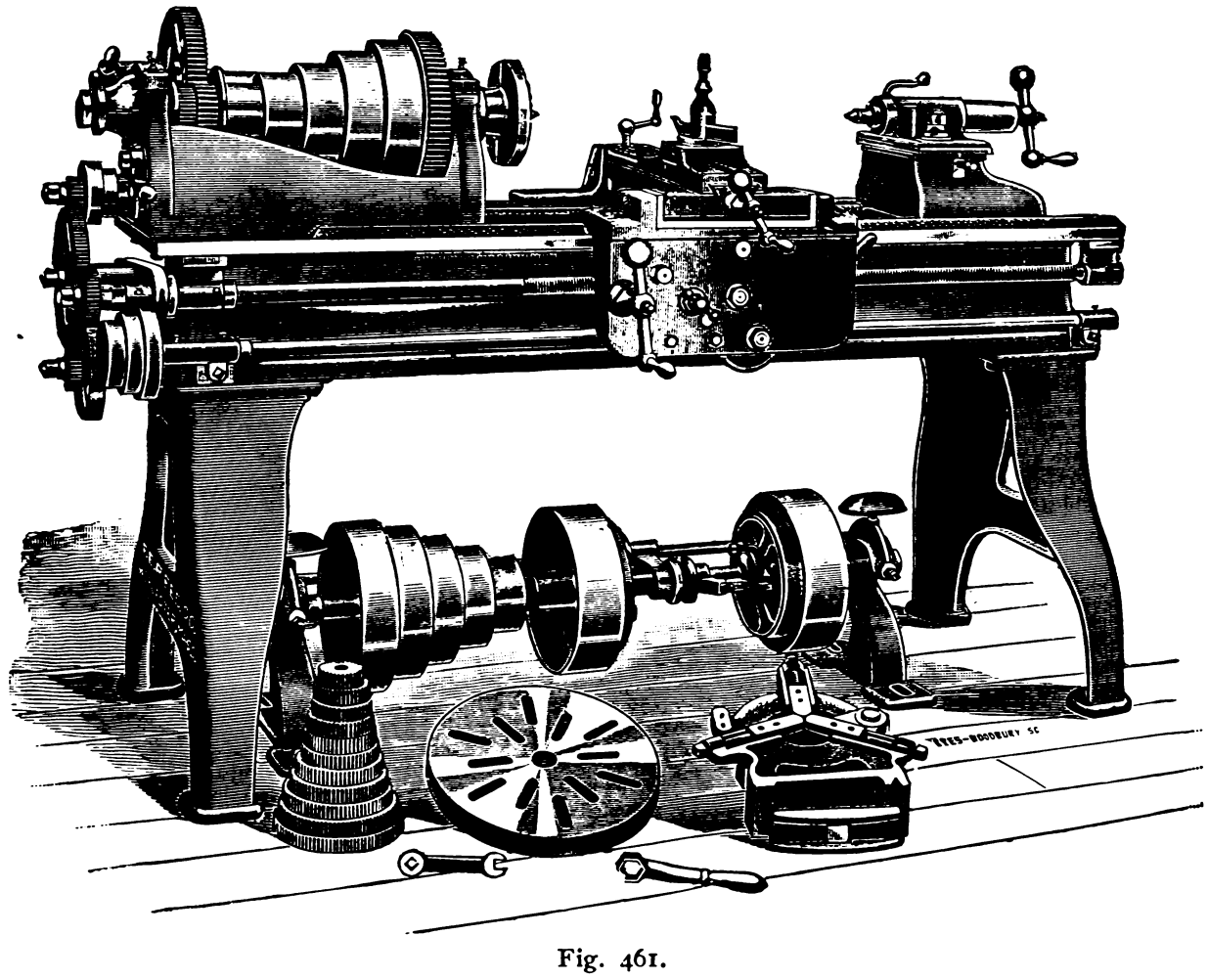

Fig. 461.

Next to the hand slide-rest lathe comes the self-acting or engine lathe. This is usually provided with a feed motion for traversing the slide rest in the direction of the length of the bed, and sometimes with a self-acting cross feed; that is to say, a feed motion that will traverse to or from the line of centres and at a right angle to the same.

In an engine lathe the parallelism or truth of the work depends upon the parallelism of the line of centres with the shears of the lathe, and therefore upon the truth of the shears or bed, and its alignment with the cone spindle and tail spindle, while the truth of the radial faces on the turned work depends upon the tool rest moving on the cross slide at a true right angle to the line of centres.

THE F. E. REED LATHE.—Figs. 461 and 462 represent a 16-inch swing engine lathe with elevating gib rest and power cross feed, being a superior example of this class of lathe, designed and constructed by the F. E. Reed Company, of Worcester Mass.; the latter figure showing the lathe with a compound instead of an elevating rest.

The same lathe with a taper turning attachment is shown in Figs. 463 and 464.

Spindle bearings of these lathes are shown in Figs. 465 and 466; the first showing the bearing machined; and the latter, Babbitt lined ready for service in the lathe, and it is seen that when completed nothing but Babbitt metal is in contact with the lathe spindle.

Lathes with elevating rests possess advantages for many kinds of work over other forms of rests in that they admit of quicker adjustment of the cutting tool, also of finer adjustment, and are exceedingly handy and afford exceptional advantages in getting at the work for measuring and other purposes.

Details of the construction of the important parts of this lathe are given as follows:

Fig. 467 is a front view of the apron, showing the arrangement of the gears for the longitudinal and cross feeds. For the hand, or carriage, traverse motion from the handle in Fig. 468 is given to the pinion A, Figs. 467 and 468, which drives spur gear B upon a sliding stud G, having at its end a pinion C which engages with the rack D. A spline or square key seated in G is the medium

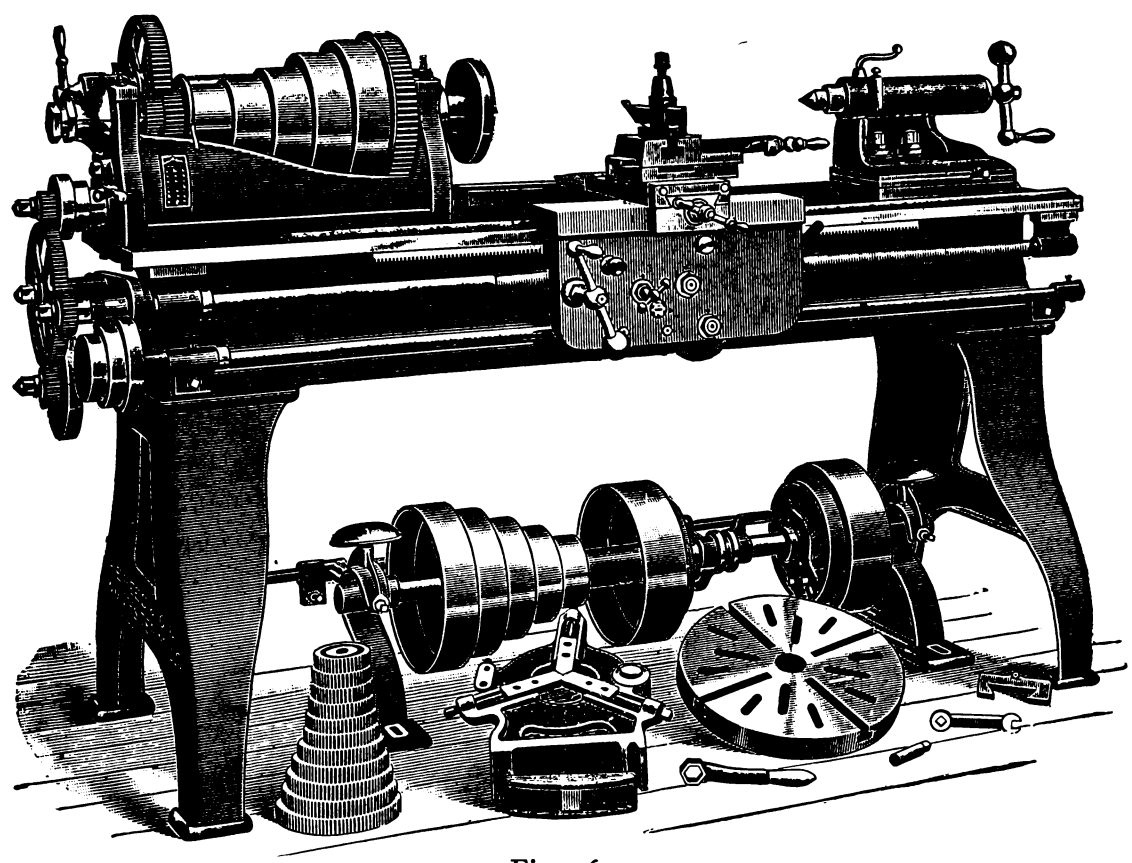

Fig. 462.

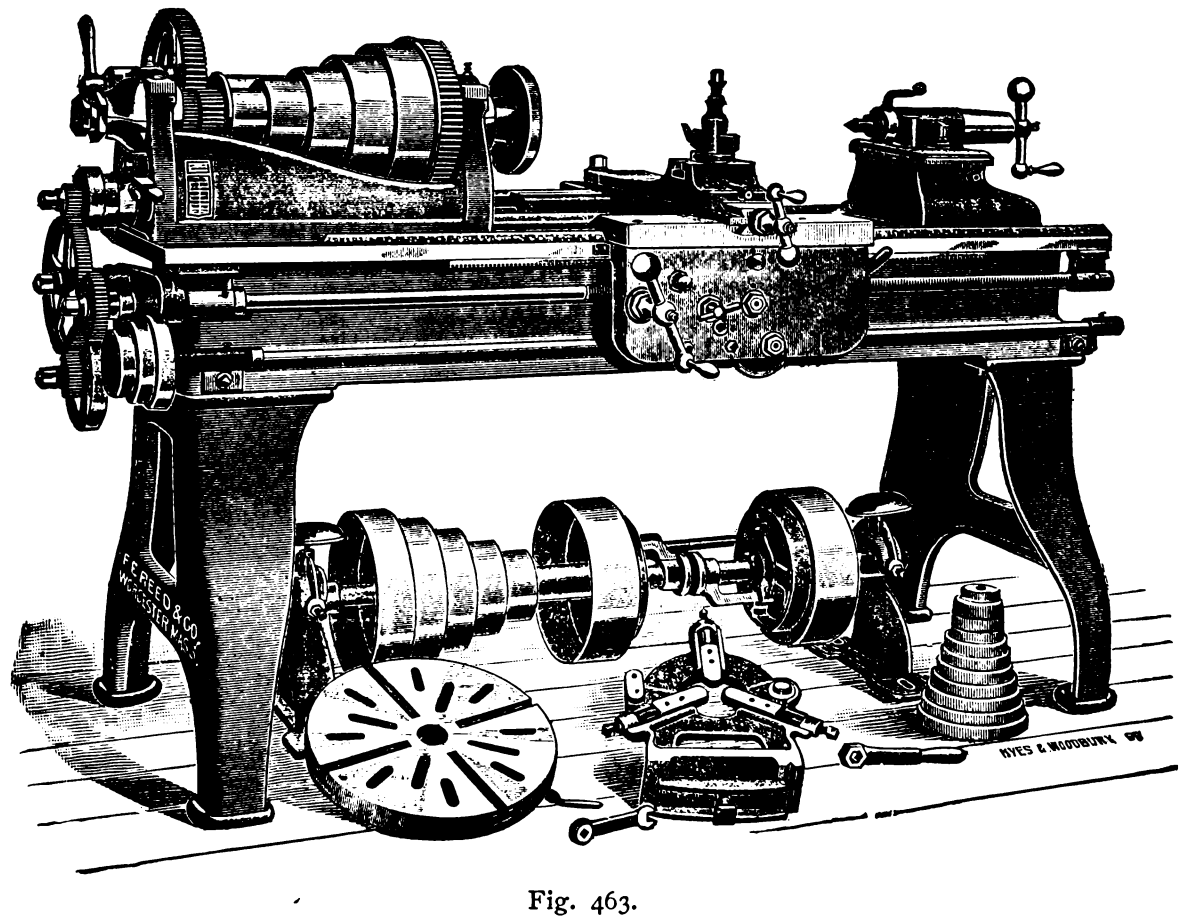

Fig. 463.

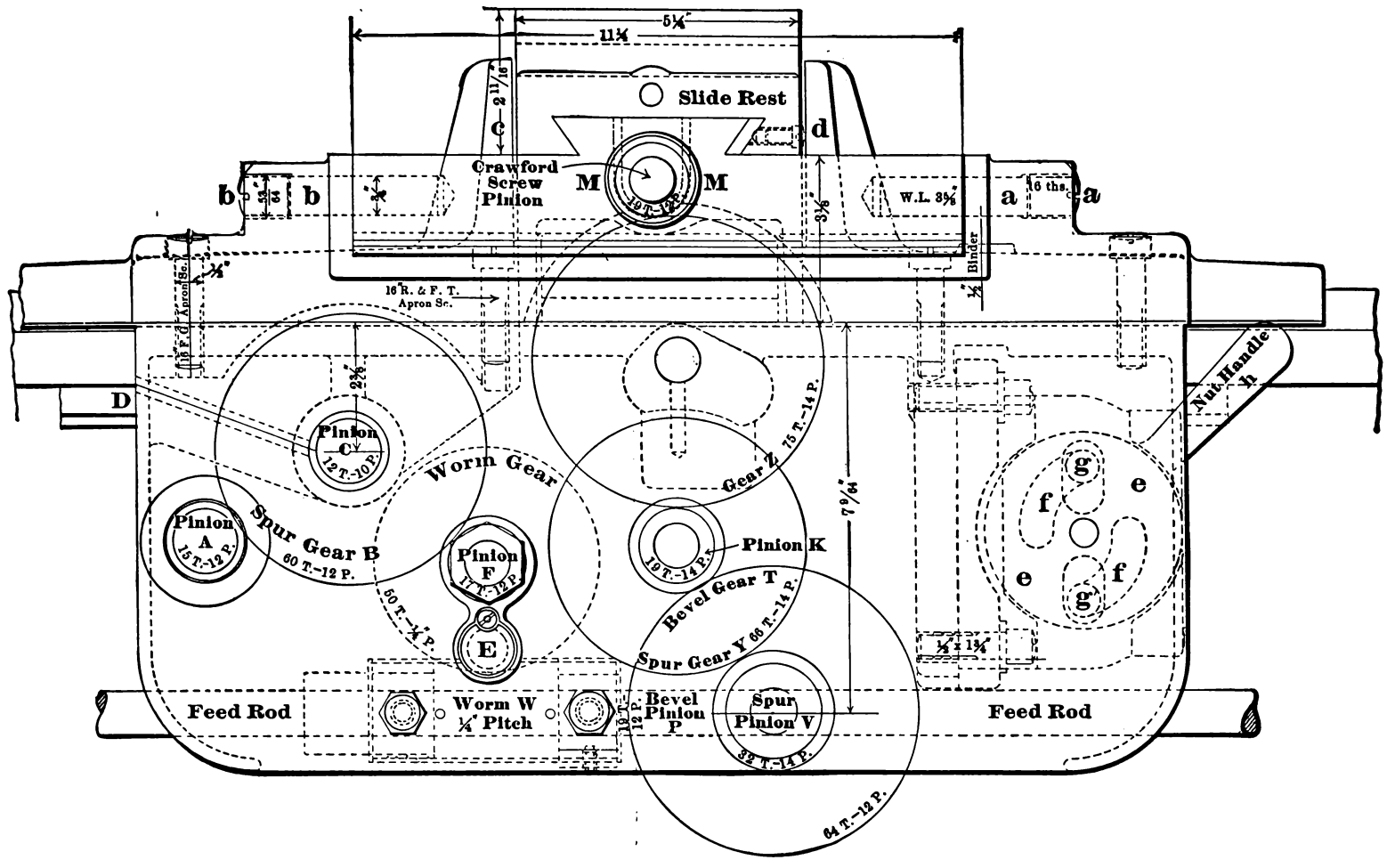

Fig. 467.

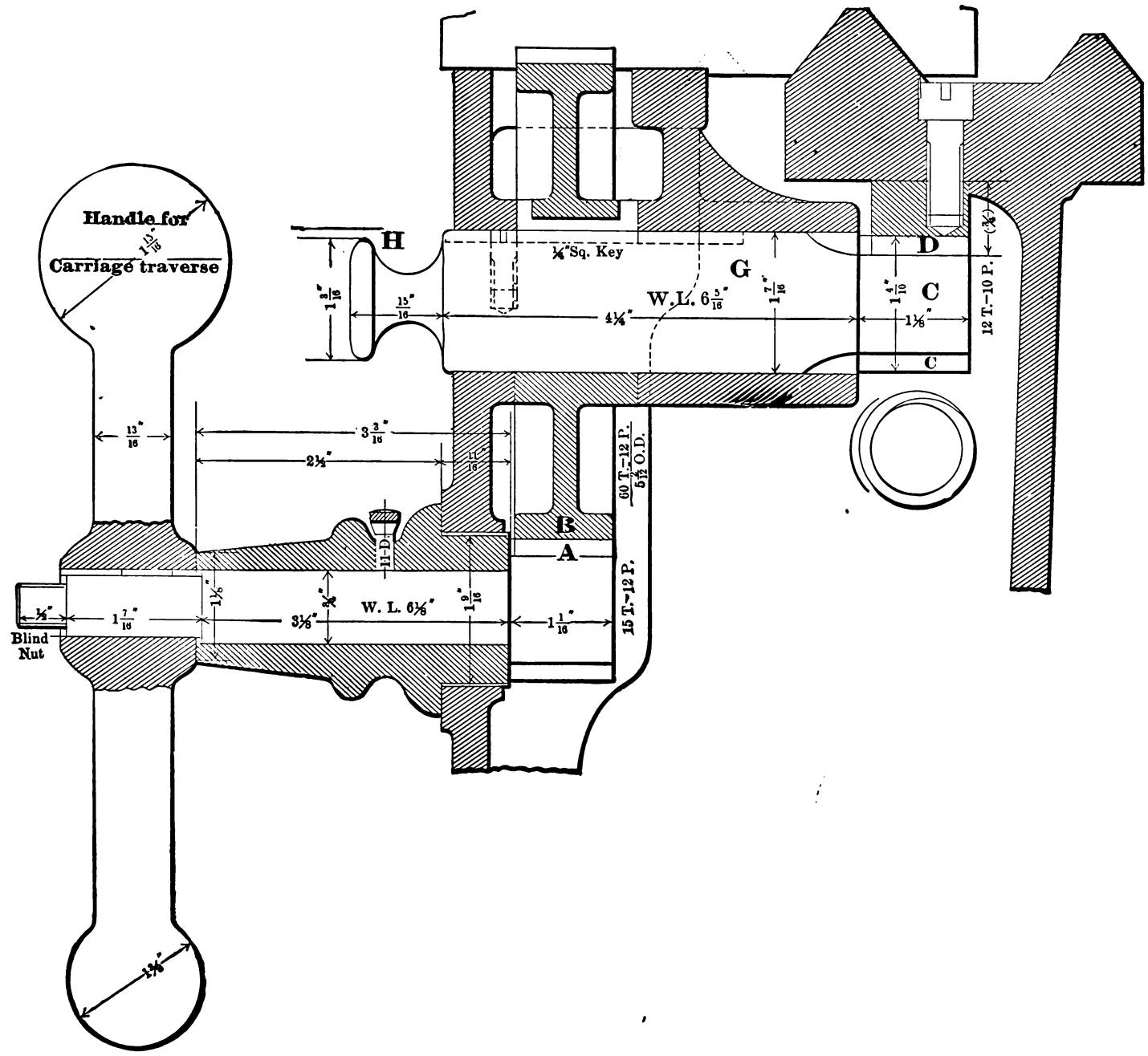

Fig. 468.

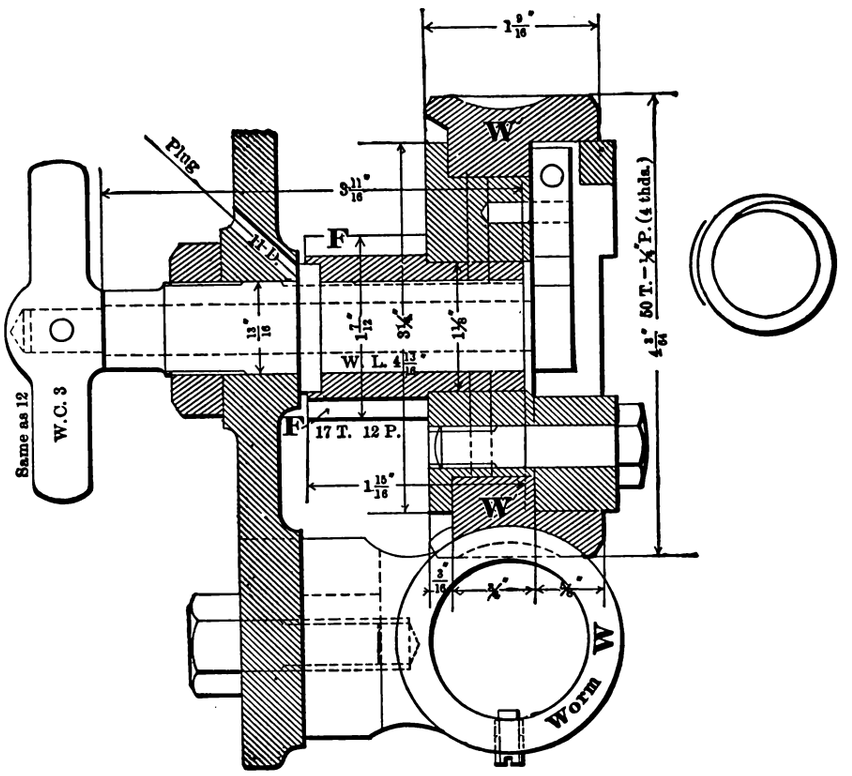

Fig. 469.

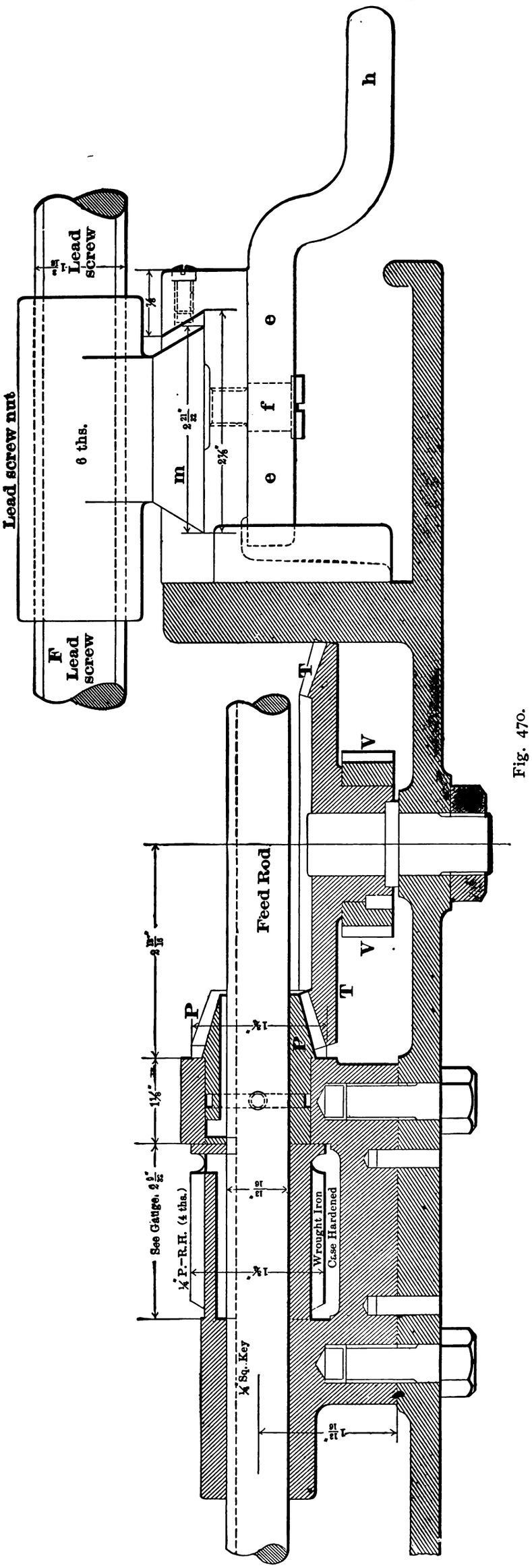

Fig. 470.

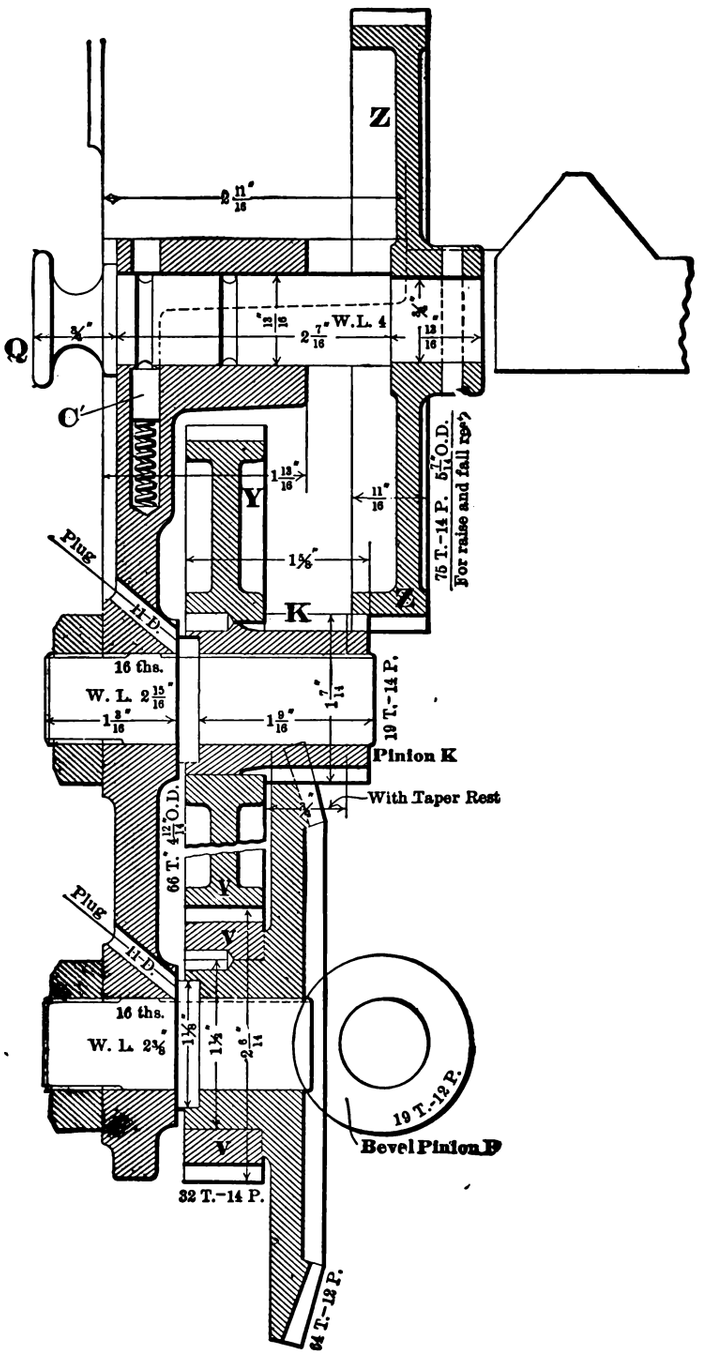

Fig. 471.

through which B drives C. By means of the knob at H, G and therefore C may be withdrawn endwise in the direction of the arrow at H, carrying the pinion C out of gear with the rack D, and the carriage traverse is thrown out of action when the lathe is used for cutting screws and the carriage is moved by means of the leading screw in connection with the open and shut nut.

The rod feed for the carriage traverse is as follows : The feed rod drives a worm W, in Figs. 467 and 469, in gear with the worm wheel W', which in turn drives the pinion F, there being a friction-clutch motion to the worm gear for throwing into, and out of, active operation. When in operation pinion F drives spur gear B and therefore the pinion C in gear with the rack D, which completes a train of gearing for the rod feed.

The self-acting cross-feed motion is as follows : Upon the feed rod is a pinion P, Figs. 470 and 471, driving a bevel gear T, which in turn drives a spur pinion V, Figs. 467, 470, and 471. Referring now to all three of these figures, spur pinion V drives spur gear Y, which drives spur pinion K, which drives a spur wheel Z, which, as seen in Fig. 467, drives the pinion M on the cross-feed screw. On referring to Figs. 471 and 474, it will be seen that the gear Z is mounted upon a stud Q, so that it can be pulled endwise and thrown either into, or out of, gear with the cross-feed pinion M, while still remaining in gear with its driving pinion K ; and to secure it in either of these desired positions a pin with a spring beneath it, as shown at C', Fig. 471, and at 3, Fig. 474, projects into one of two annular grooves shown in Fig. 474 by the numerals 1 and 2 provided in stud Q. As shown in the Fig. 474, Q is pushed inwards and the cross-feed motion is out of action. The method of throwing the feed-screw nut in and out of gear for screw cutting is shown in Figs. 467, 470, and 472. The nut is made in two halves, of which the top one, m, Fig. 470, is seen to operate vertically in a V-shaped slideway.

The plate e, having its handle at h, is pivoted at its centre. Each half of the nut has a projecting pin *g g'*, Fig. 472, passing into circular grooves *f f*, these grooves being eccentric to the centre of motion of *e e*, so that operating the nut handle *h* opens and closes the two halves of the feed nut upon the lead screw. A stop motion for the automatic carriage feed is provided, as in Fig. 473. A sleeve A''' is driven by a spline in the feed rod and is carried by the apron. As the carriage traverses forward and A''' meets A'', the latter is driven forward, compressing the spiral spring shown and causing the clutch motion at the end of the feed rod to be thrown out of gear and the feed traverse to cease.

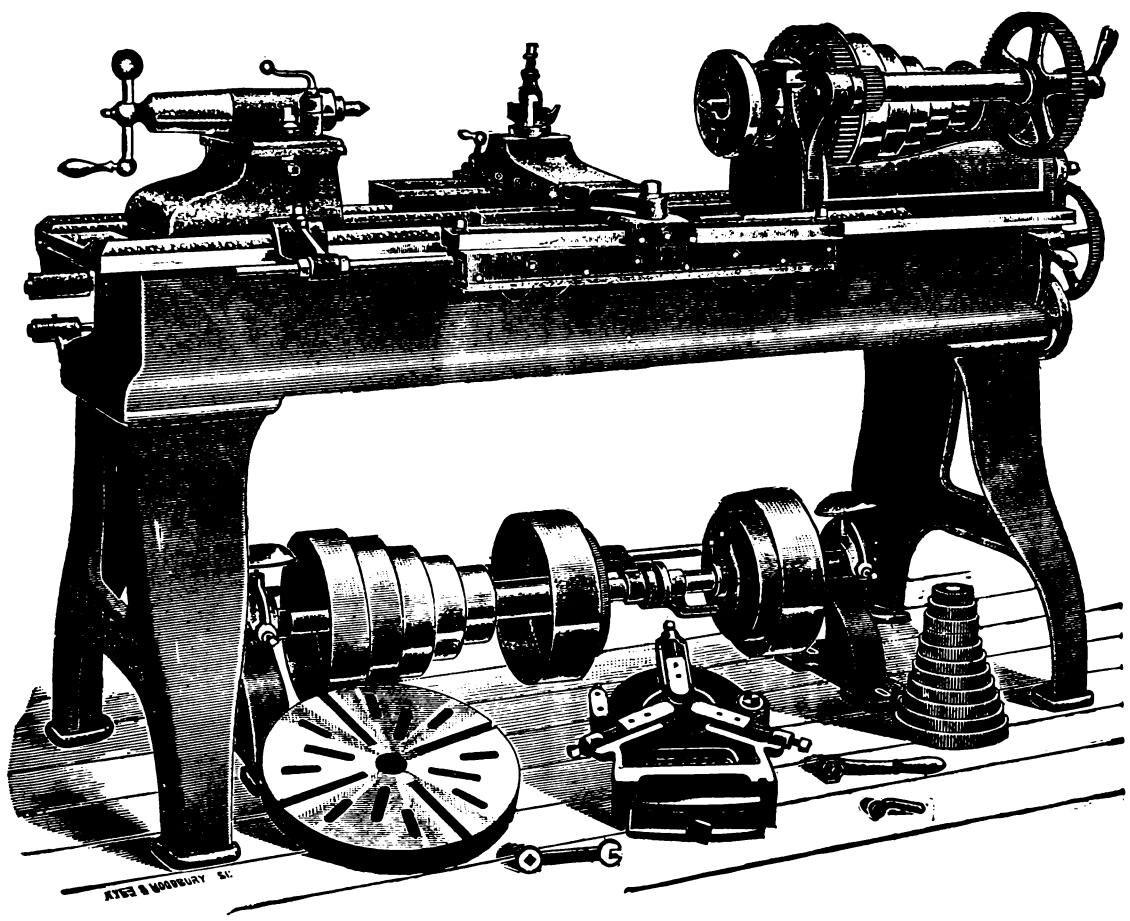

Fig. 464.

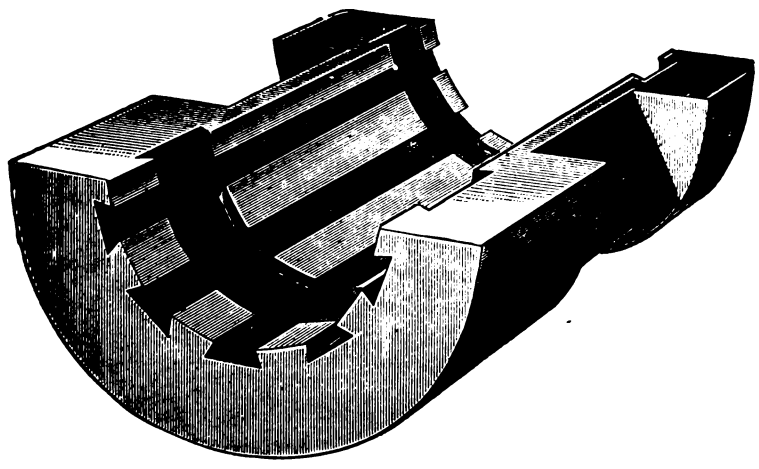

Fig. 465.

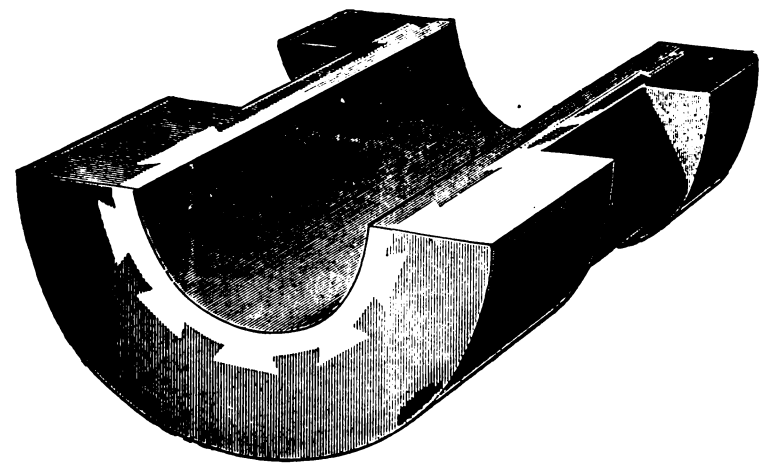

Fig. 466.

The construction of the elevating rest will be understood from Figs. 467 and 474. Referring to Fig. 467, it is pivoted upon pins at *a a*, *b b*, and threaded in the lathe carriage, to which it is accurately fitted. At the other end it is operated vertically by the elevating screw, which is seated in a ball joint provided in the lathe carriage, which is gibbed to give it a secure fit to the lathe shears ; in this manner play or lost motion at that end of the rest is avoided. The carriage, it will be seen, fits upon the outer two of the vee slides of the lathe shears, having a larger bearing area than the

inside vees upon which the tailstock slides. The construction of the headstock is shown in Figs. 475 and 476. There are five steps to the belt cone, giving five changes of speed in single, and five in double or back gear, the lever being thrown in and out. End motion or play to the live spindle is taken up and the fit adjusted by a fibre corresponding washer **y** adjusted for compression by the threaded stud P locked in position by the nut **q**.

The feed motions are driven as follows: Upon the live spindle is the gear A, and beneath it, mounted upon a swinging bracket, are two gears B and C in gear with each other. This bracket swings upon having upon it the lock pin F, tongue T, which is pivoted at p and a spring S. Three taper holes G are provided as seats for the pin F when the swing frame E reaches its adjusted position.

The swing frame for carrying the change gears for screw cutting is shown in Fig. 477; it is swung from its end *a* concentric with the lead screw, and in connection with the change gear, means are provided for a wide range of rod feed receiving motion from the change gear. Immediate gear A drives pinion A″, which in turn drives an extra pulley marked in the figure, "pulley for rod feed." This pulley can be belted to the pulley on the feed rod.

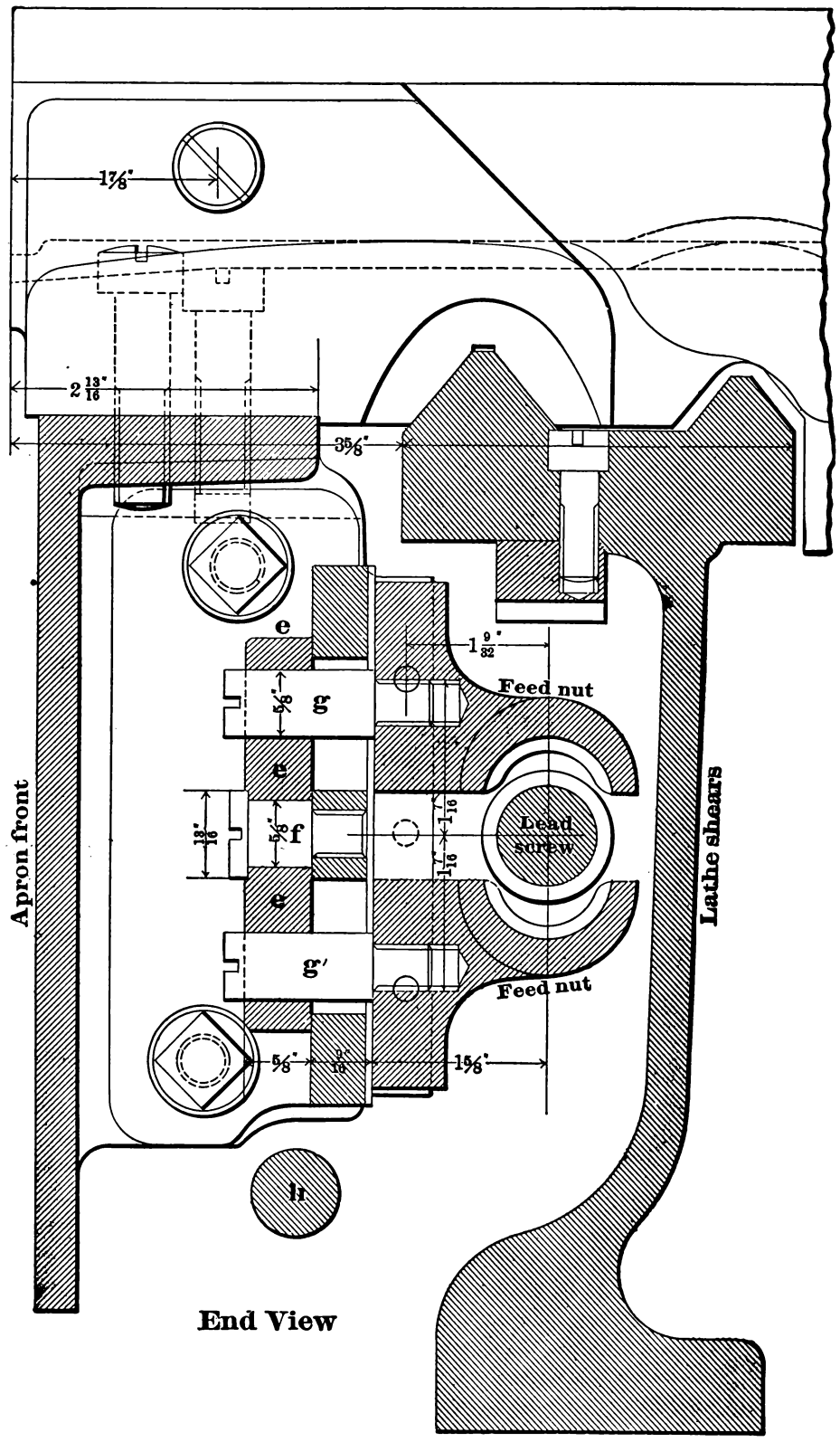

Fig. 472.

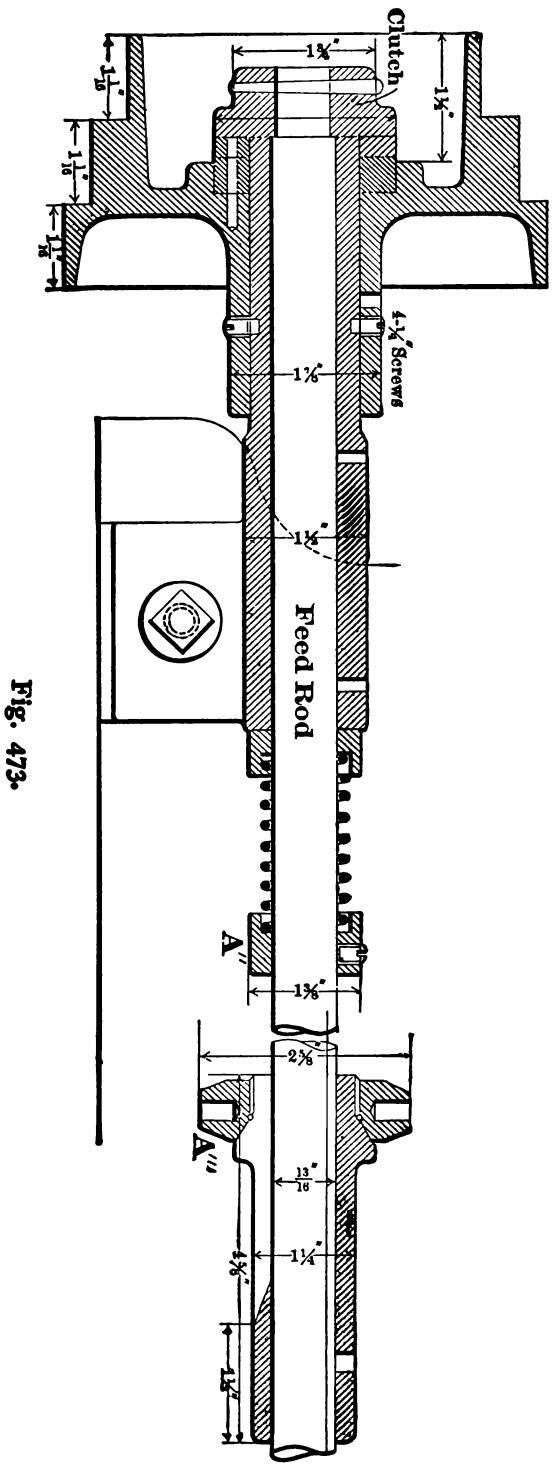

Fig. 473.

the same axis as the gear D, which is concentric with the top feed cone; gear C is in mesh with gear D as well as with gear B. Now referring to Fig. 476, suppose B is swung to the right, coming to gear with and be driven by A and transmit the motion through C to D, giving D and the top feed cone, seen in Fig. 475, motion in one direction; while if, on the other hand, the bracket be swung to the left, the gear C, Fig. 476, will come into gear with A and transmit its motion to D in an opposite direction, whereas with B and C in the central position shown in the figure they are both clear of A, therefore out of action; the construction for throwing the feed in and out of gear being as follows: E is the bracket or swinging arm upon which C and B are carried, being swung by the handle H,

The construction of the tailstock is shown in Fig. 478, and it will be seen that it is held securely to the lathe shears by two bolts passing entirely through it and having nuts of ready access at the top.

The tail spindle is securely clamped by the split at *s*, which is closed by pressure of the screw when the handle *h* is operated. The upper part *u u* has a slideway *v* in the lower part *f* and can be set over for turning taper by means of the screws *t t*.

An ingenious and excellent construction of a taper turning attachment is that on the lathe, Fig. 479, constructed by the Flathers' Machine Tool Co., Nashua, New Hampshire, which is shown in Figs. 479, 480, 481, 482, 483.

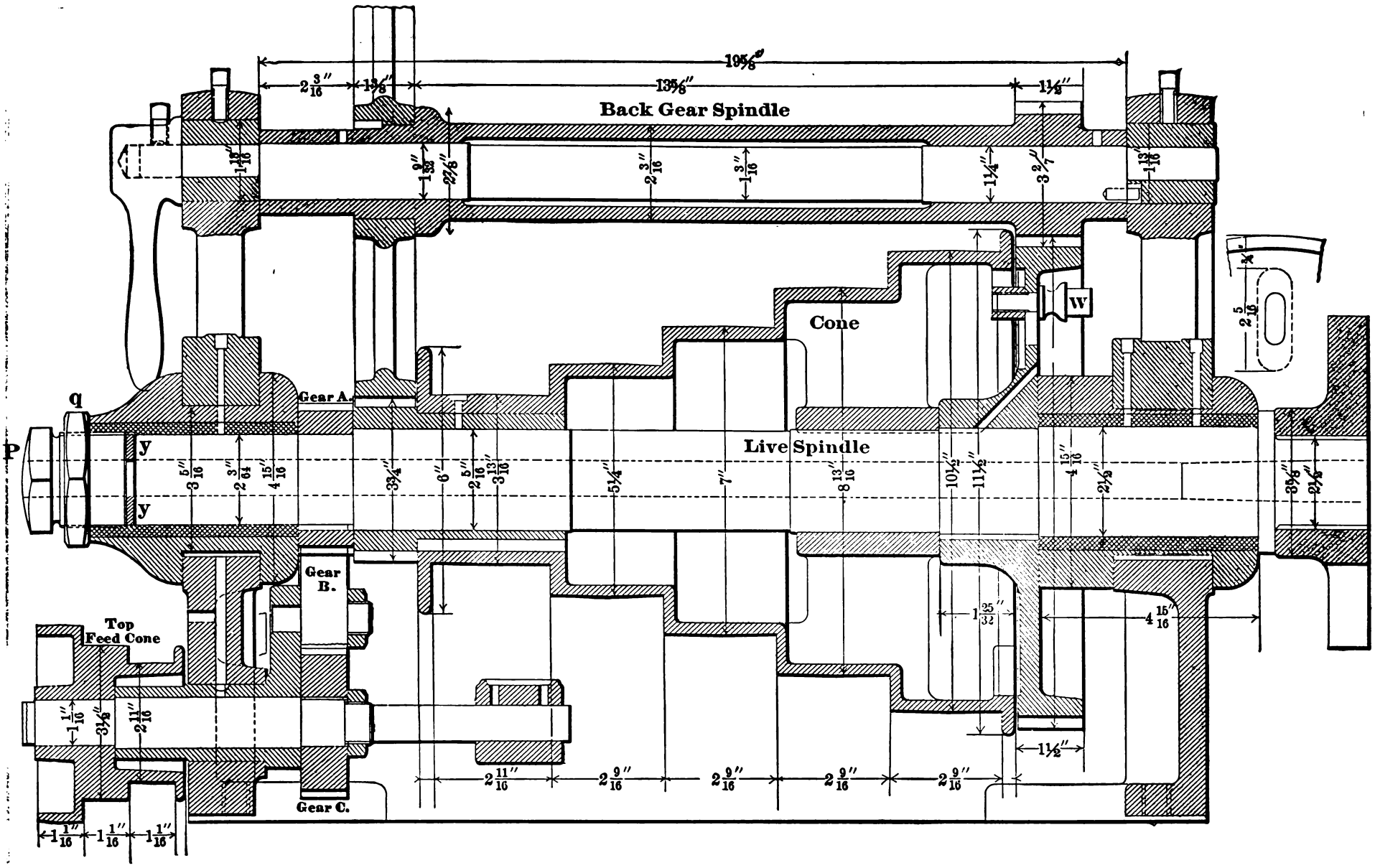

Fig. 475.

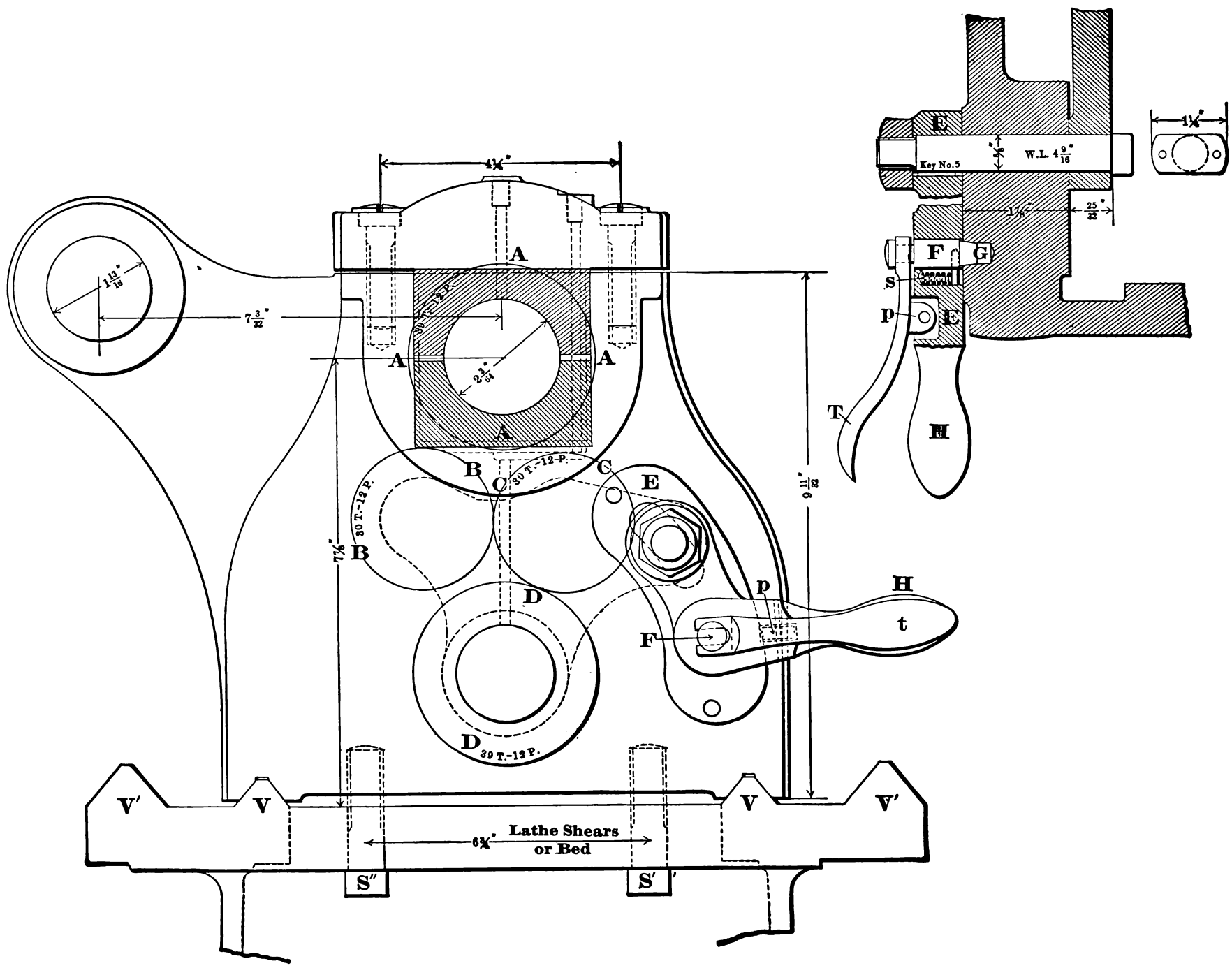

Fig. 476.

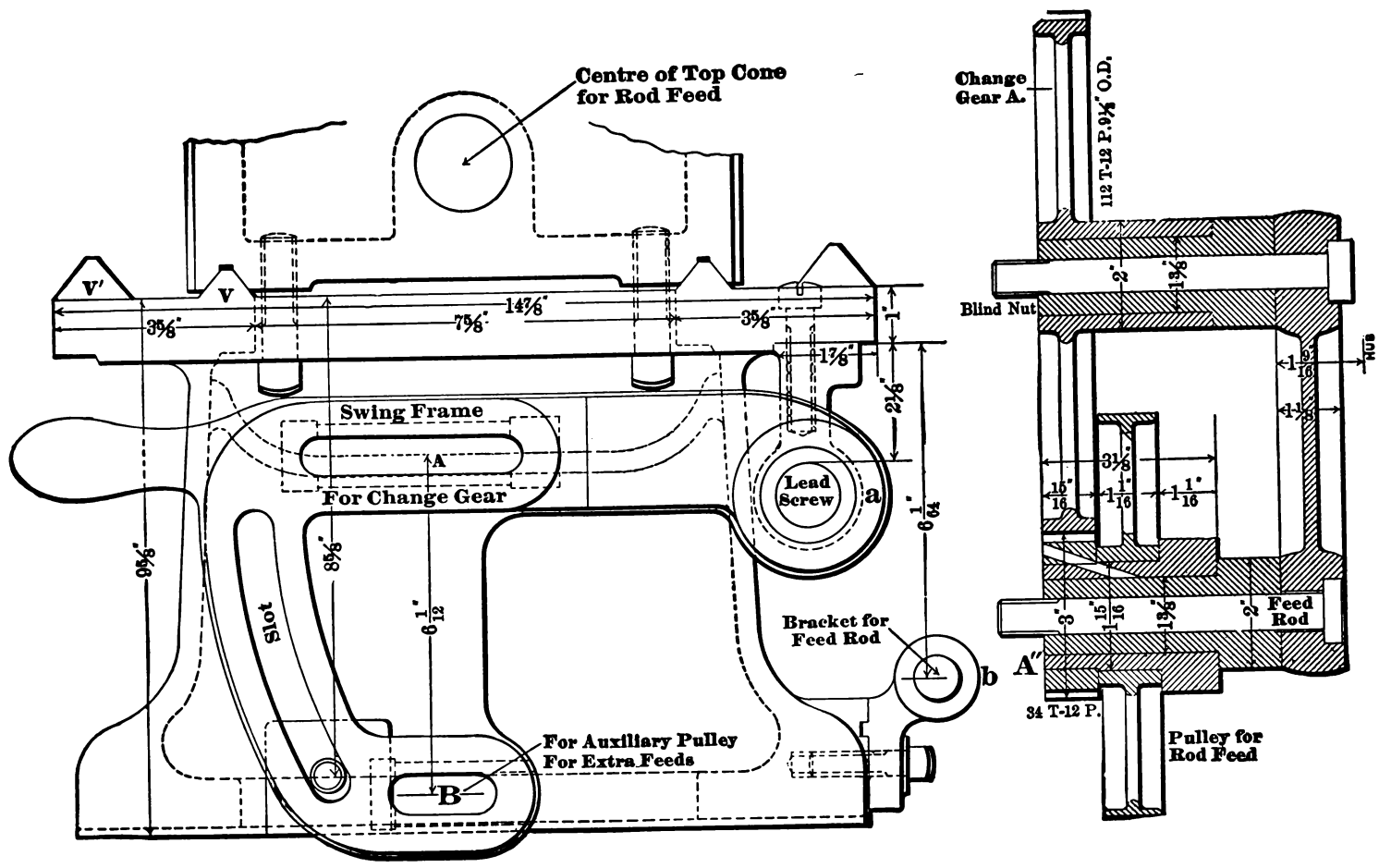

Fig. 477.

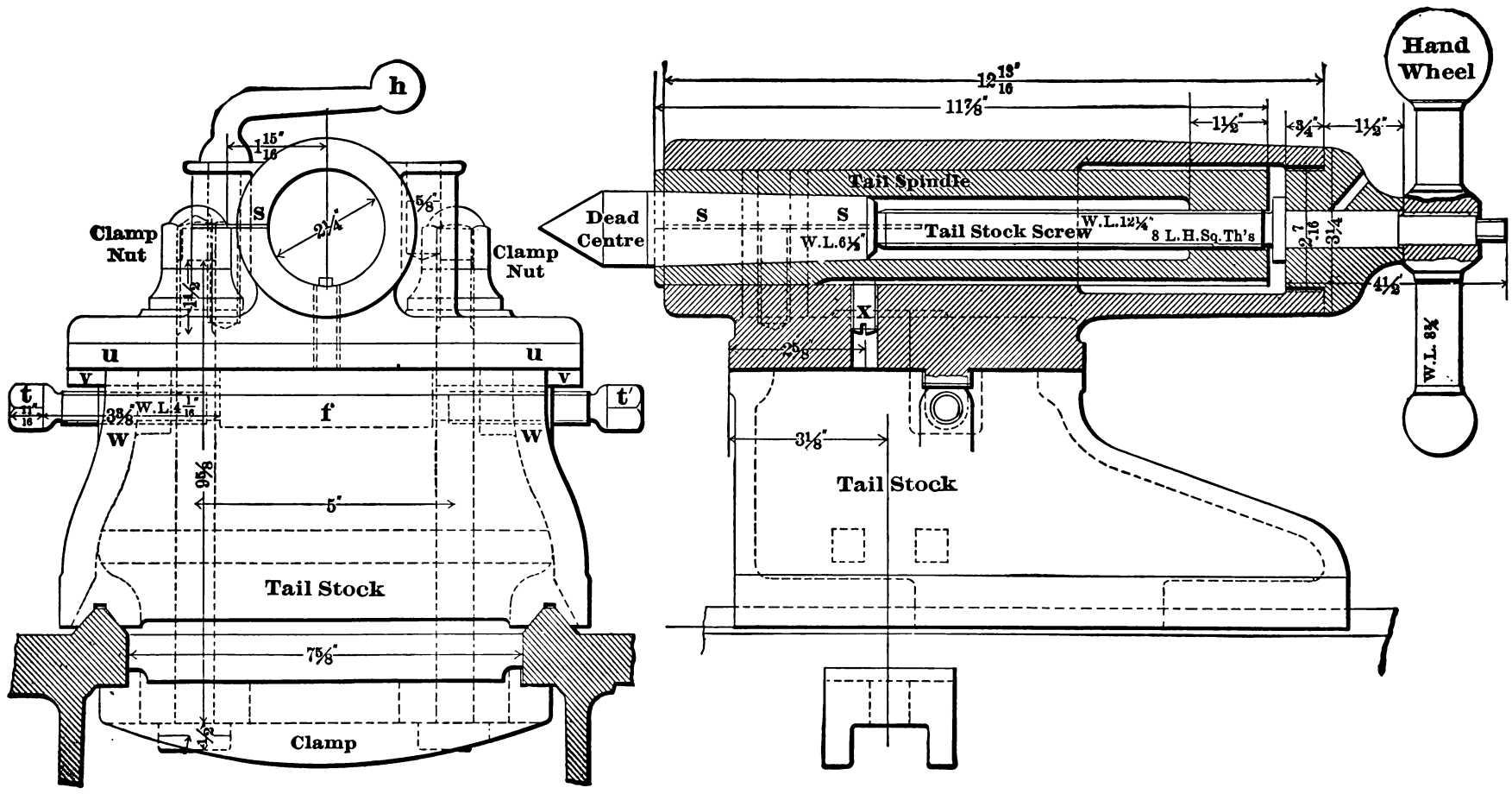

Fig. 478.

The cross-feed screw enters a sleeve at the handle end, as shown in Fig. 483, and is splined to receive feather in the sleeve. This permits the cross-feed screw to move endwise in the sleeve and the slide rest to move from the line of lathe centres without moving the cross-feed screw handle, which can be used to put on the required depth of cut in the usual way.

The cross-feed screw when attached to slide *b* on the guide bar *a*, Fig. 480, acts merely as a rod causing the slide rest, as it traverses along the lathe shears, to move in a line parallel to the guide bar *a*, thus turning the work to a taper corresponding to the angle at which the bar is set.

At P P, Fig. 483, a pinion is provided, being solid with the sleeve and serving to rotate the cross-feed screw when the automatic cross feed is put in action by the gearing in the lathe apron. The cross-feed screw passes through its nut in the usual manner and is journalled at the back end in a sliding block which fits over the dovetailed cross slide—as shown in Fig. 481—and slides freely upon it except when clamped to it, which can be done by tightening a screw. On the under side of this sliding block is a lug—a sliding fitted in a slot provided in the end *c* of the cross slide, Fig. 480—and it is in this lug that the cross-feed screw is held by a collar on the inside of its journal and a nut and washer at its back end, which is seen in Fig. 481.

The lug is upon the piece *d*, Fig. 481, secured by a bolt *e* to the guide *b* and obviously released from it by the removal of *e*. The taper turning guide bar *a* is pivoted in the centre of its length and is adjusted to stand at the angle required for the taper to be turned by a graduated disk shown at *f*, Fig. 481, and in plan in Fig. 482, being secured to its adjusted position by the screw at *g*.

In the original patent for taper turning attachments obtained by Dwight Slate, of Hartford, Conn., the brackets for carrying the attachment were secured to the back of the lathe shears, and in order to enable the turning of a taper at different points in the work length it was necessary to provide a slideway along the back of the lathe shears so that the brackets and taper bar would be adjusted along it to the required position. In a patent granted, however, to John D. Hazlett and Louis F. Lord, of Meadville, Penn., the said brackets are carried by the back of the lathe carriage itself and therefore require no adjustment other than that required to set the bar at the angle necessary for the taper to be turned. The following is from the specification of the said patent:

Our invention is a taper attachment for engine lathes and includes a slip-block connected to the tool-holder and guides to make said holder move laterally of the bed to form the taper; and the novelty in the invention, broadly speaking, lies in the means for supporting the slip-block and guide, the said support being carried by the moving carriage and always bearing the same relation to the slip-block and the point of strain.

In the drawings, Plate VII.–E, Fig. 1 is a plan view. Fig. 2 is a transverse section with the tool-holder in dotted lines. Fig. 3 is a side view of the slip-block, its guide, and the support therefor. Fig. 3*a* is a similar view with the parts in another position. Fig. 4 is a section on line *x x* of Fig 1. Fig. 5 is a vertical transverse section on line *z z* of Fig. 3*a*.

In the drawings, the bed A, the carriage B, and the tool-holder C are of ordinary construction, the carriage having transverse guideways 1, along which the tool-holder moves in forming the taper. The tool-holder is operated by a bar 2, connected with a slip-block 5, and the lateral position of the slip-block in relation to the bed and the work is determined by an adjustable guide having a dovetailed rib 6, the inclined position of which corresponds to the incline of the taper to be formed, and as the carriage moves the slip-block travels along the inclined guide and through the connection 2 moves the tool-block laterally. The guide 6 is held against longitudinal movement upon a plate 7 by a screw 12, which acts as a pivot, and a screw 17 passing through a curved slot 16 in the guide by which the adjustment is effected. The plate 7 has a dovetailed channel in its under side, and into this fits a dovetail rib on the bar 8, which supports all the parts just described—that is, the plate 7, the guide 6, and the slip-block. This support 8 is carried by brackets 9 at each end secured to the moving carriage and equally distant from the block 5, with which the support and brackets move and always bear the same relation. The plate 7 and the guide 6 are held against longitudinal movement by a bar 3, secured at one end to a bracket 4, fastened to the bed, and at the other end connected to the screw 12, which

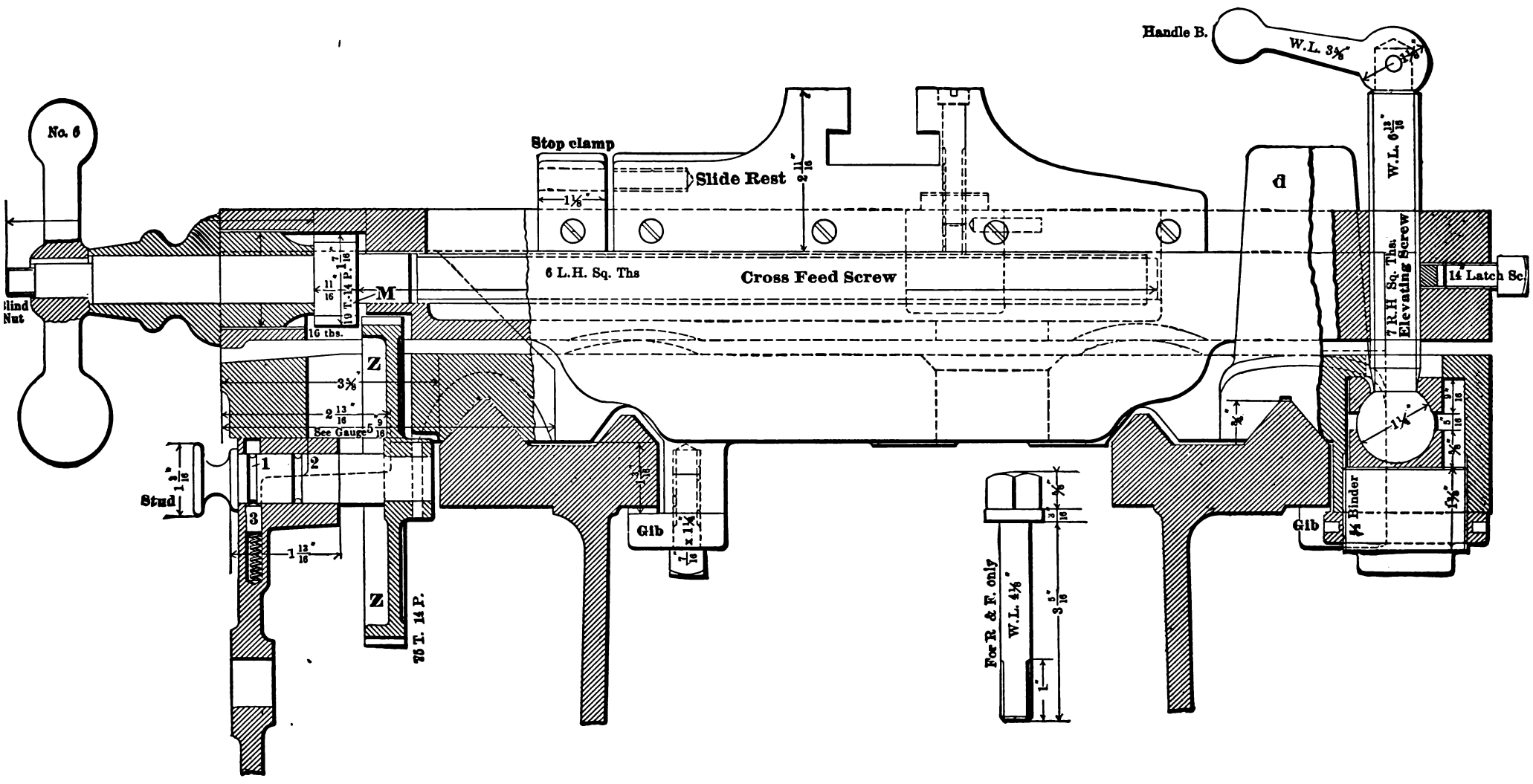

Fig. 474.

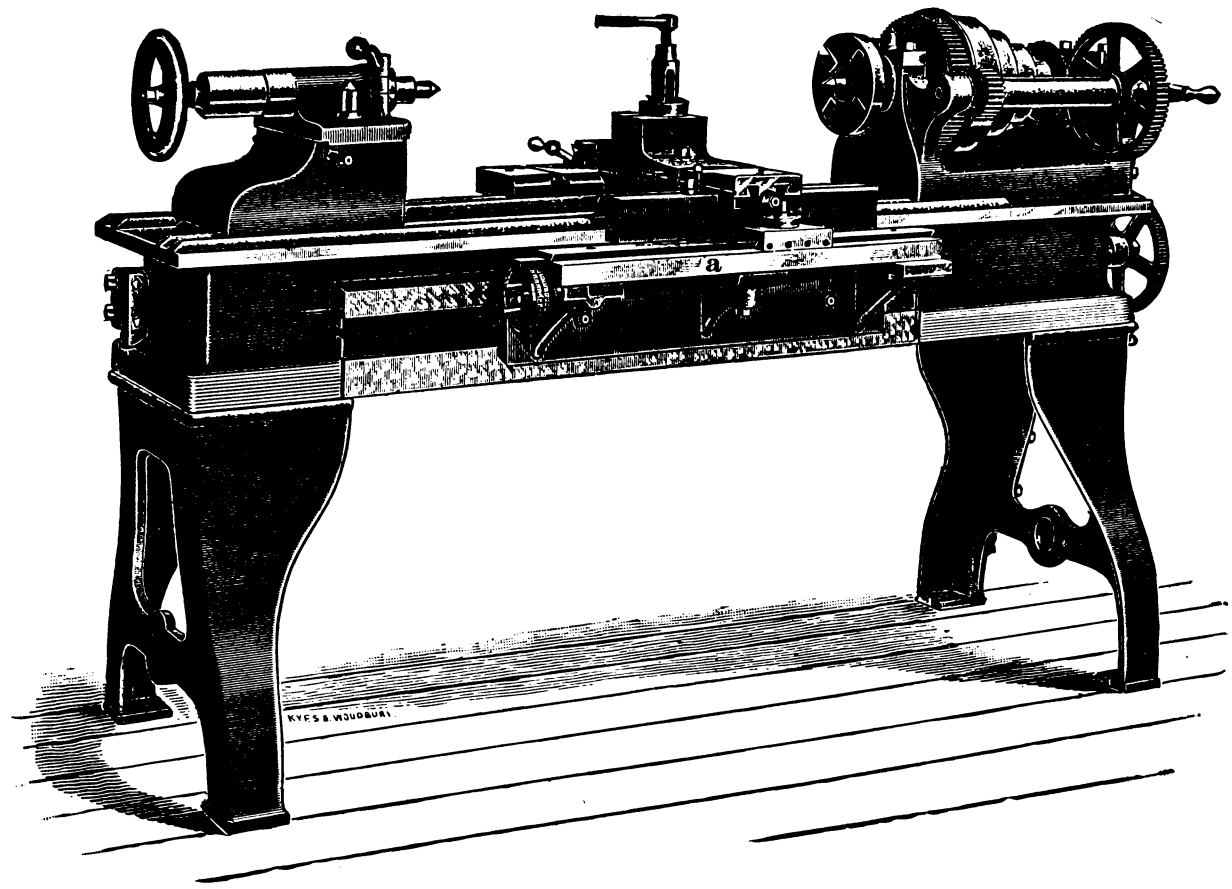

Fig. 479.

connects the guide and plate 7. A channel 10 is formed in the dovetail rib of the support 8 to receive the bar 3.

When the carriage moves, the guide-plate and the plate 7 remain stationary, while the slip-block and support 8 move

491*a*, are made of hammered steel hollowed spindles; the headstock feed rod and lead screw bearings being of phosphor bronze. Screw-cutting stocks are provided, graduated to the $\frac{1}{1000}$ part of an inch and can be set at zero in any position. The longitudinal

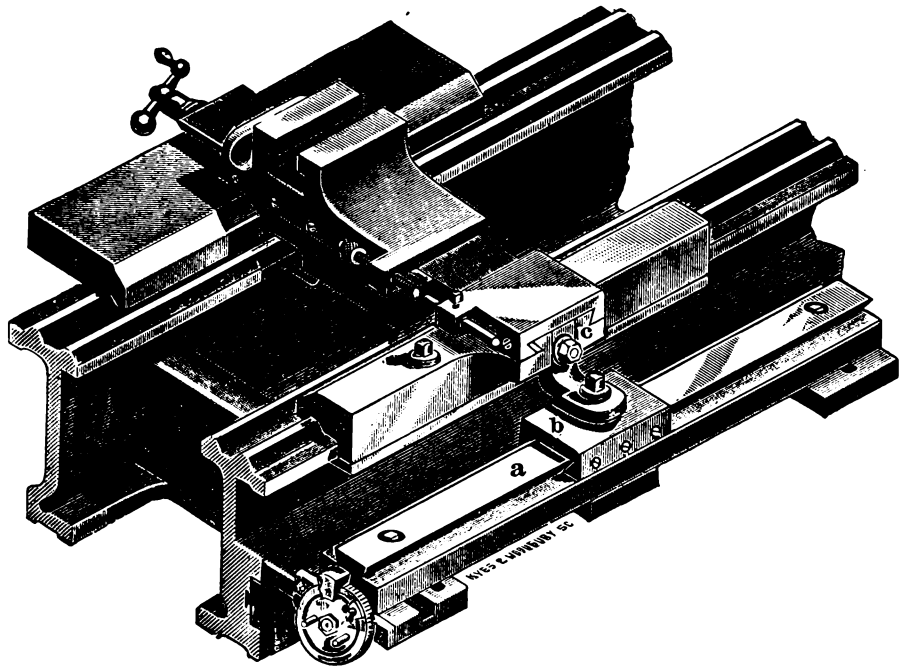

Fig. 480.

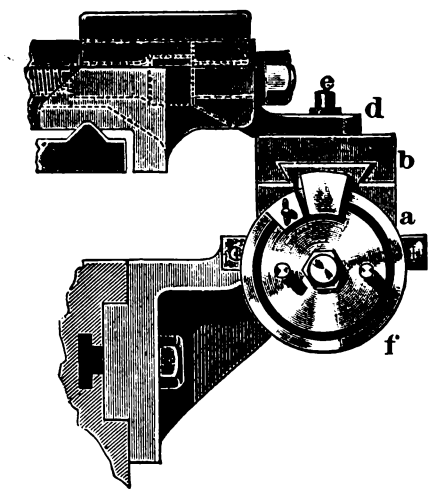

Fig. 481.

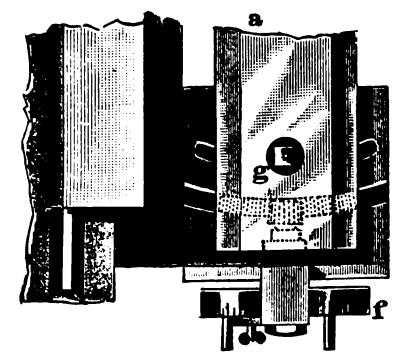

Fig. 482.

together with the brackets 9, the bar 2, and the tool-holder. As the support 8 moves in the dovetail channel of the plate 7, it acts as a bearing for the plate 7, and retains said plate in proper position in alignment with the bed to secure perfect action of the parts. The bar 2 is adjustably connected with the tool-holder to vary the position of the same for different work.

By reason of the supporting plate 8, which sustains the plate 7 and the guide 6 on the carriage, no adjustment of these parts is necessary to suit different lengths of material operated upon, as the brackets and plate move with the carriage and thus bear at all times the same relation to the point of work. In machines now in use the supporting brackets are connected to the bed and they must be adjusted opposite the point of work, and when the length of the material to be turned is changed the adjustment of the brackets is required on the bed.

THE LE BLOND ENGINE LATHES.—These lathes, Figs. 484 to

and cross feeds are automatic. The apron gear is so arranged that the rod feed and screw feed cannot be put into action at the same time. Tailstocks are arranged to set over for turning

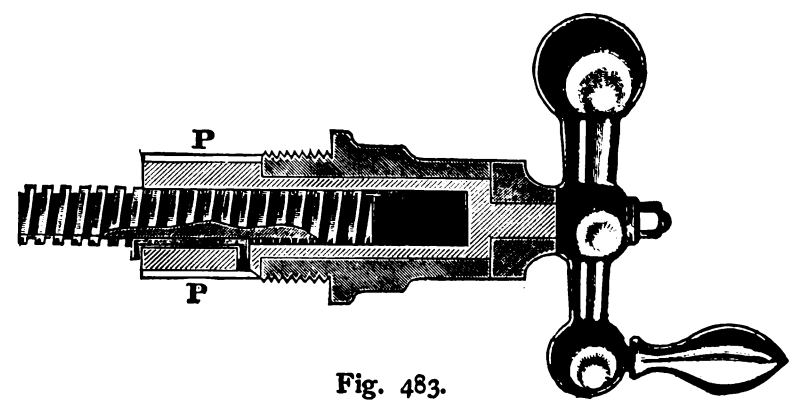

Fig. 483.

Fig. 1

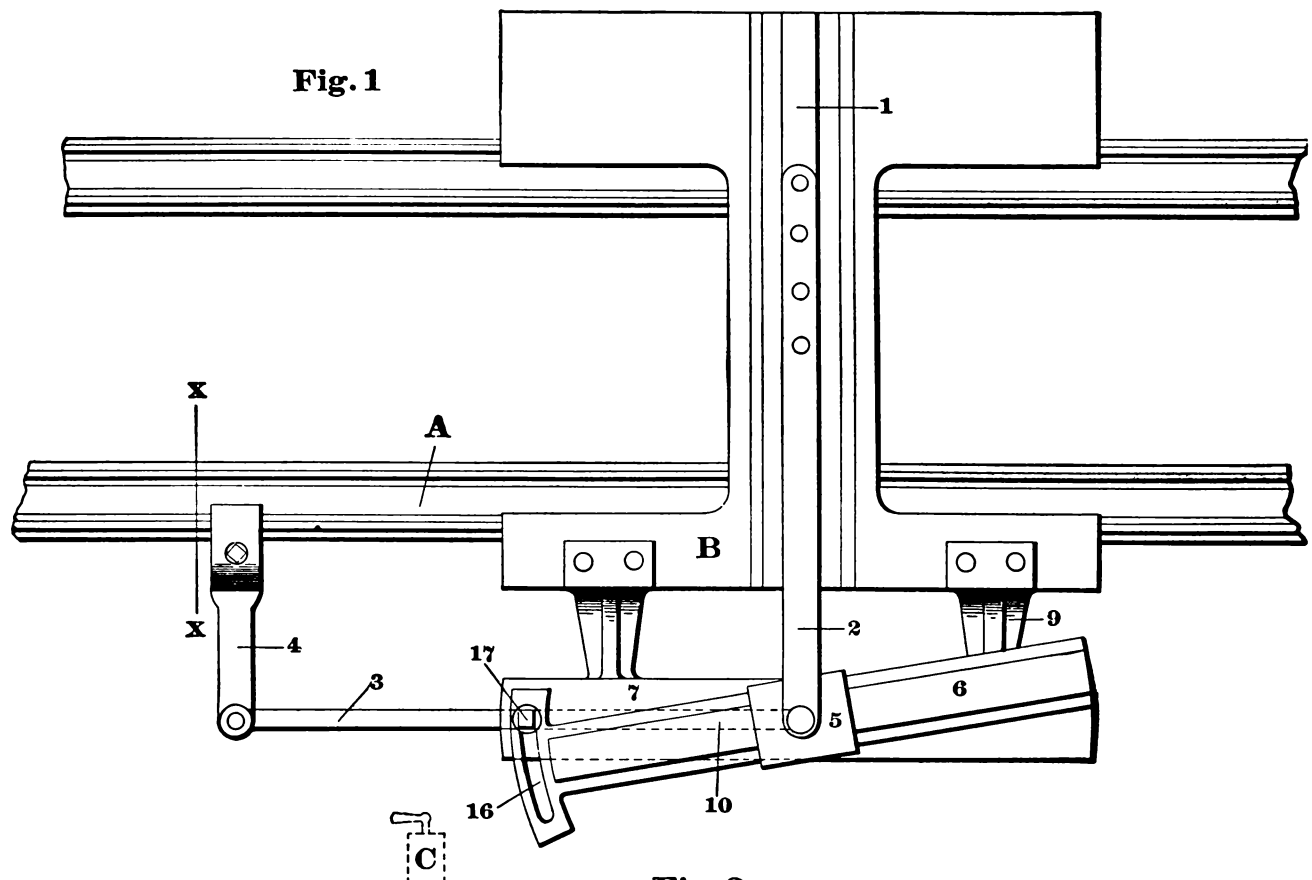

Fig. 2

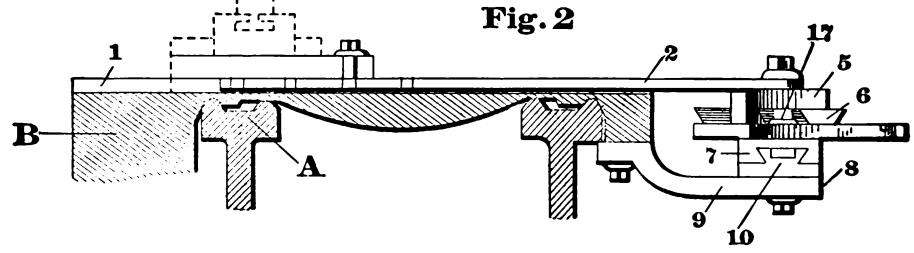

Fig. 3

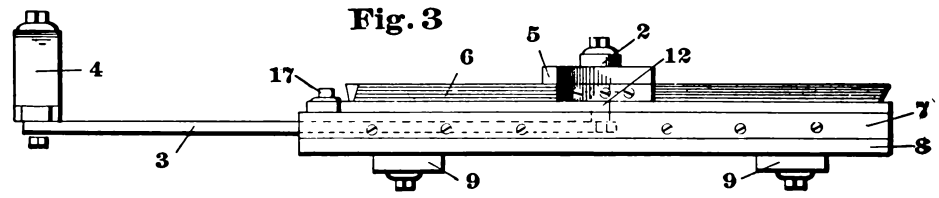

Fig. 3a

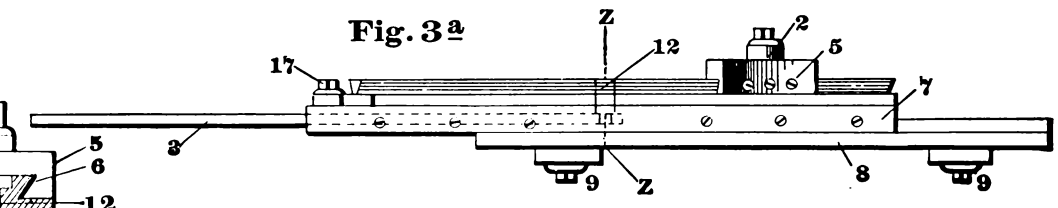

Fig. 5

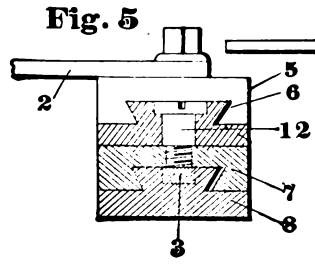

Fig. 4

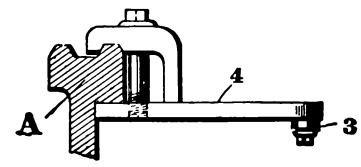

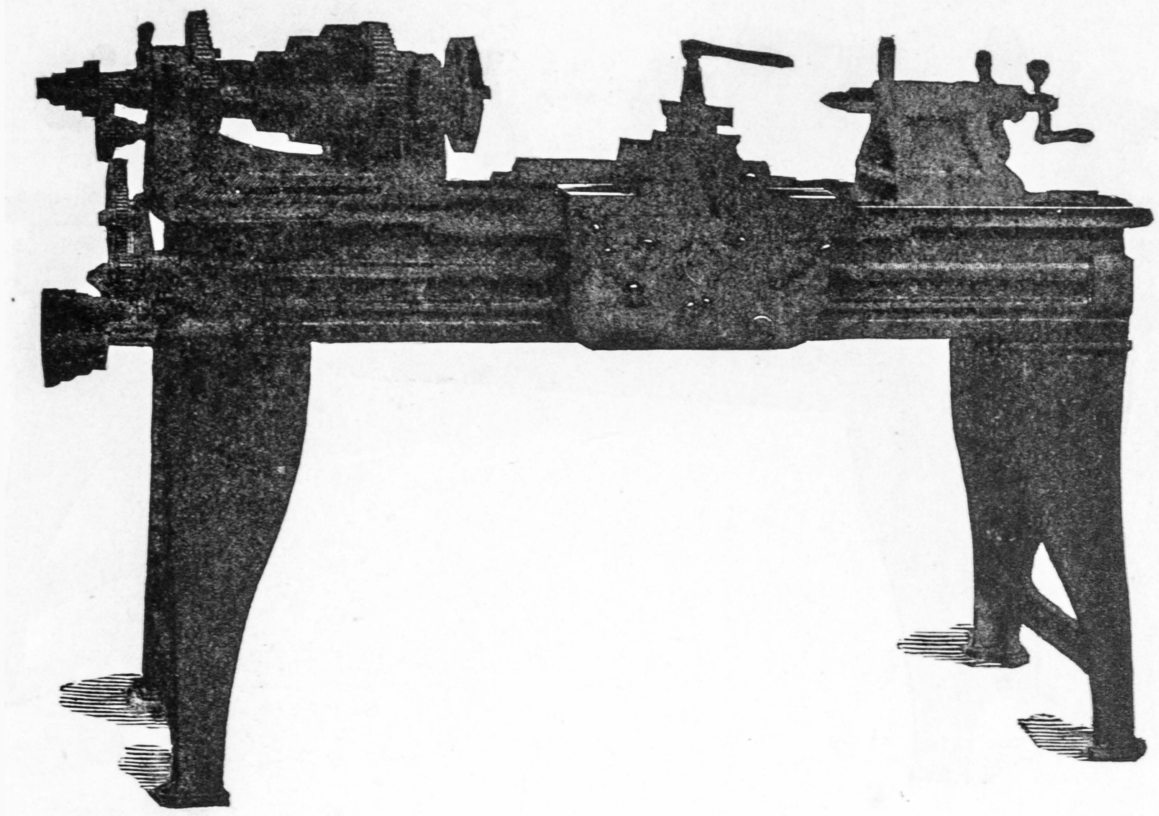

Fig. 484.

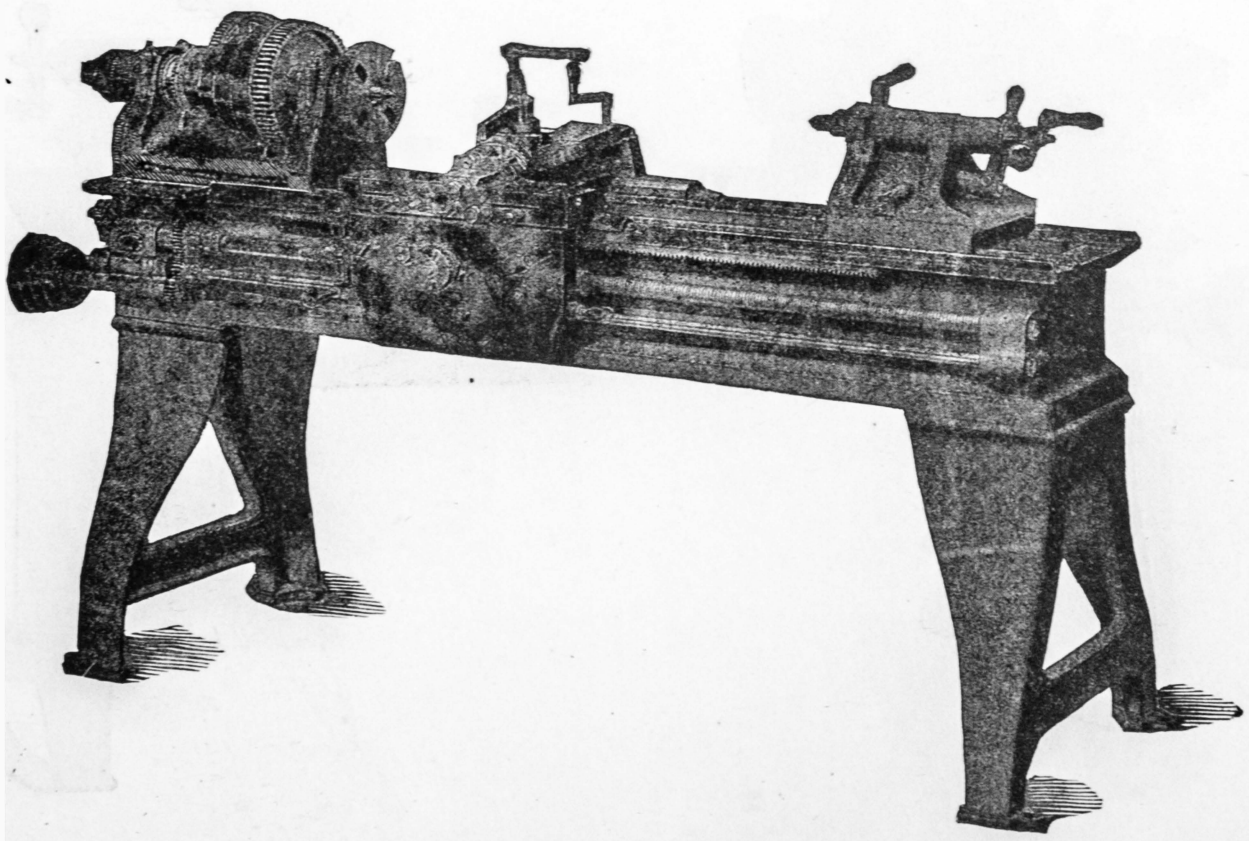

Fig. 485.

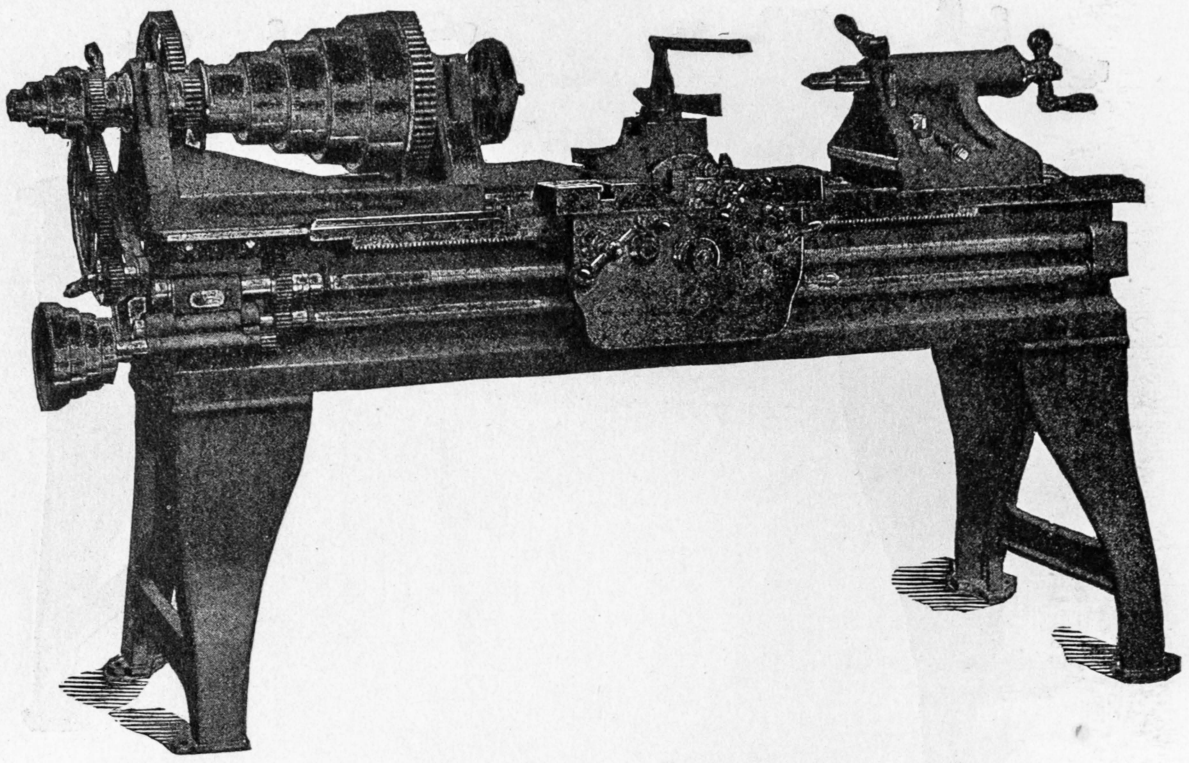

Fig. 486.

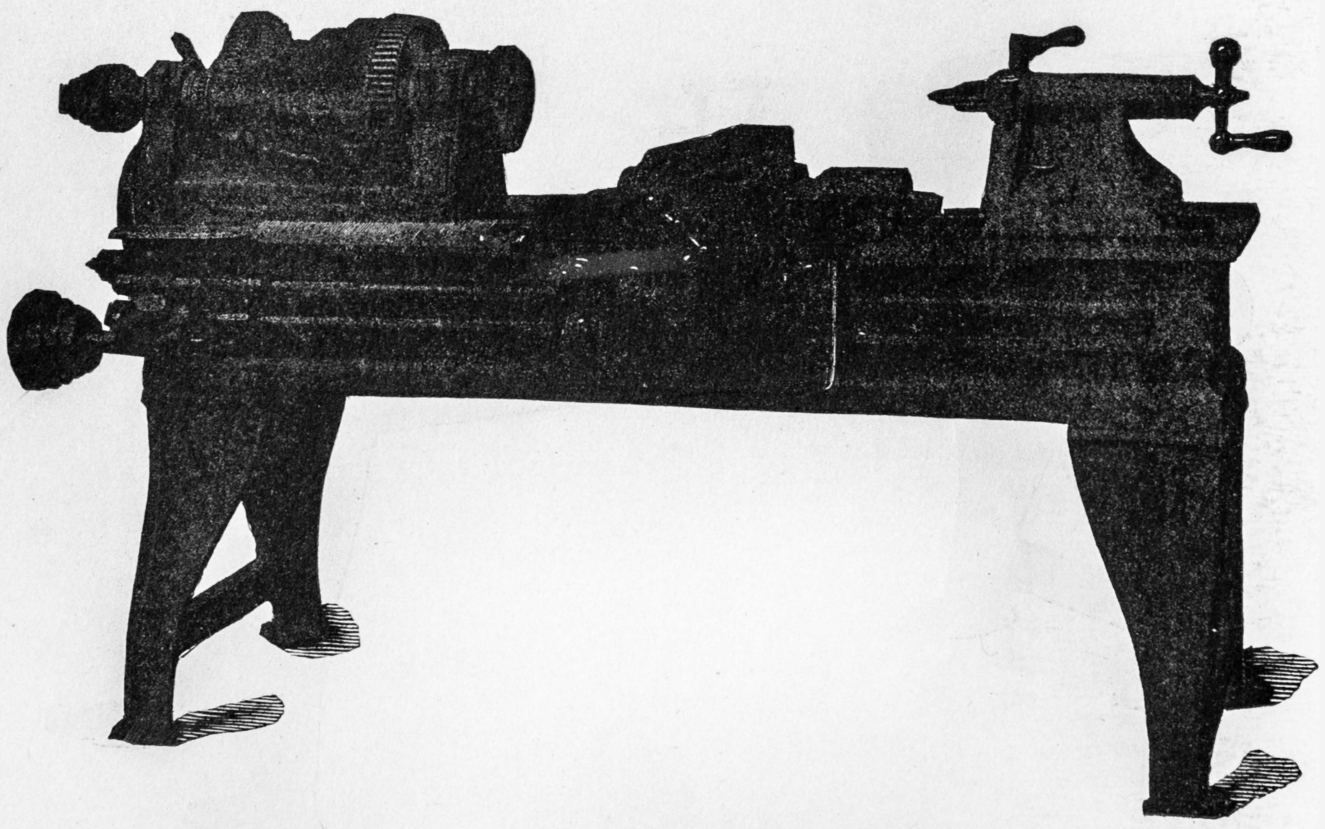

Fig. 487.

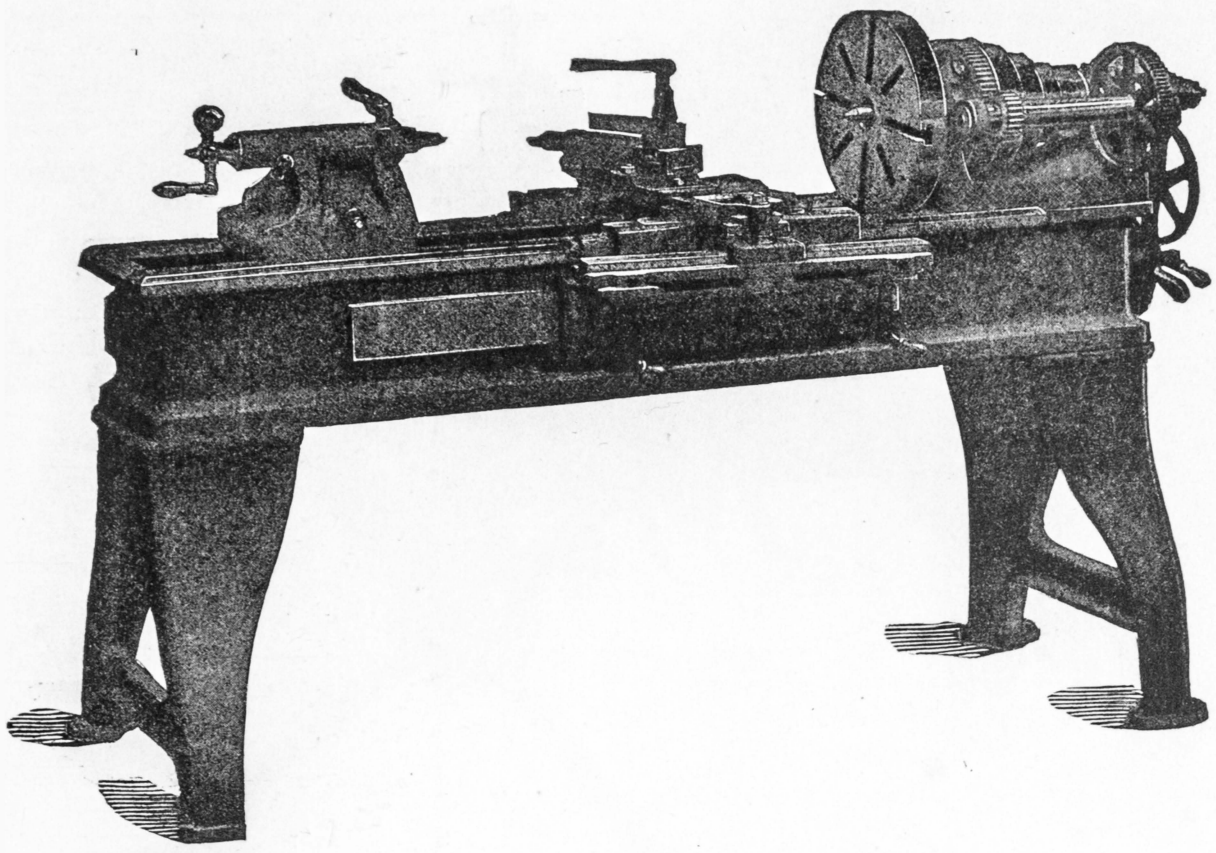

Fig. 488.

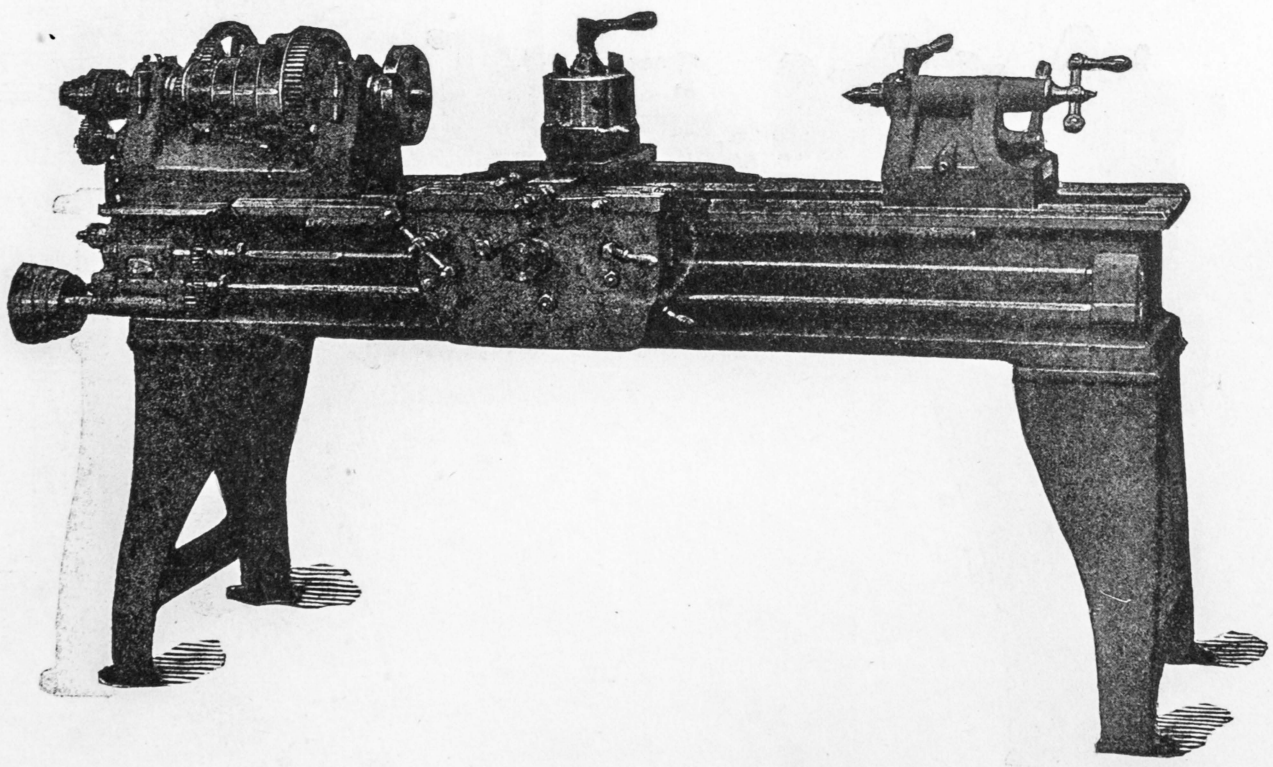

Fig. 489.

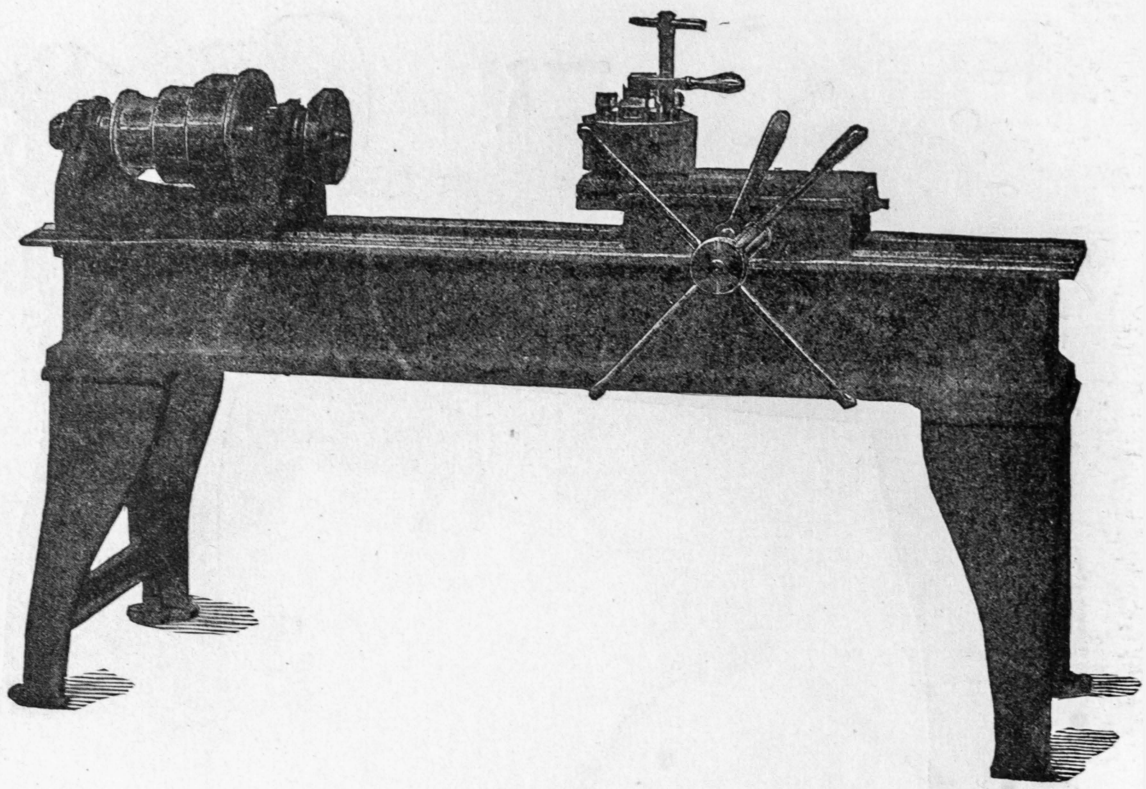

Fig. 490.

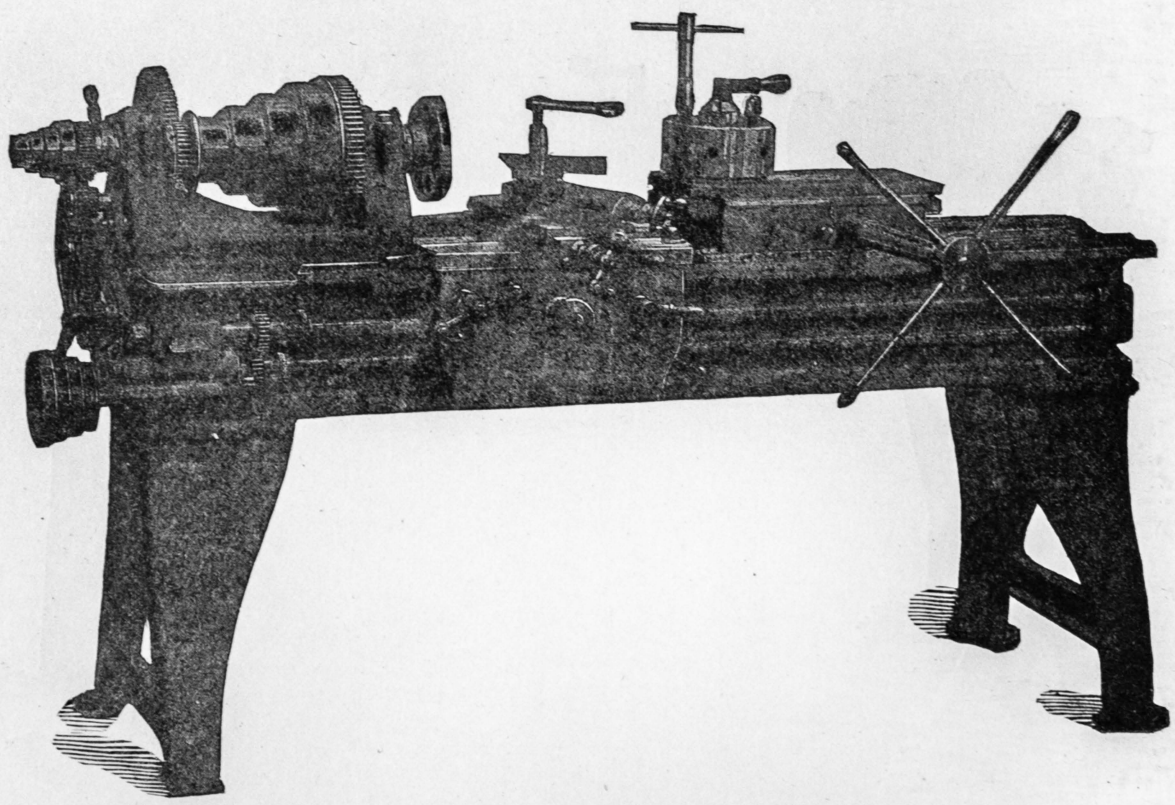

Fig. 491.

tapers if required and are graduated. All the feed motions are reversible in the apron. The feed cones are on swinging brackets and act as belt tighteners for the feed belts. All these lathes are fitted with a dial on the lead screw so that threads can be cut without either stopping the lathe or reversing the motion of the lead screw. Fig. 484 represents a 12-inch lathe, cutting threads from 5 to 40 per inch. Fig. 485 has a range of threads from 5 to 48 per inch; the hole through its spindle being $\frac{13}{16}$ inch. This lathe has an elevating slide rest. Fig. 486 has a swing of 16 inches and cuts threads from 3 to 24 per inch; the hole through the spindle being $1\frac{1}{16}$ inch. The tailstock sets over to turn tapers and is graduated. A compound rest is also provided. Threads cut are from 2 to 20 per inch. Fig. 488 shows the lathe with a taper turning attachment carried on brackets, which is carried by a slide on the back of the bed and is therefore adjustable along it. Fig. 489 shows the lathe with a turret on the carriage which is so constructed that the turret can be removed and the lathe used in the ordinary manner. Fig. 487 shows the lathe arranged as a plain chucking lathe. The end thrust of the live spindle is taken up with ball bearings, while the hole through the spindle is large enough to work stock from the bar of as large a diameter as the lathe is intended to drive. Fig. 491*a* shows the turret turned upside down to expose its construction.

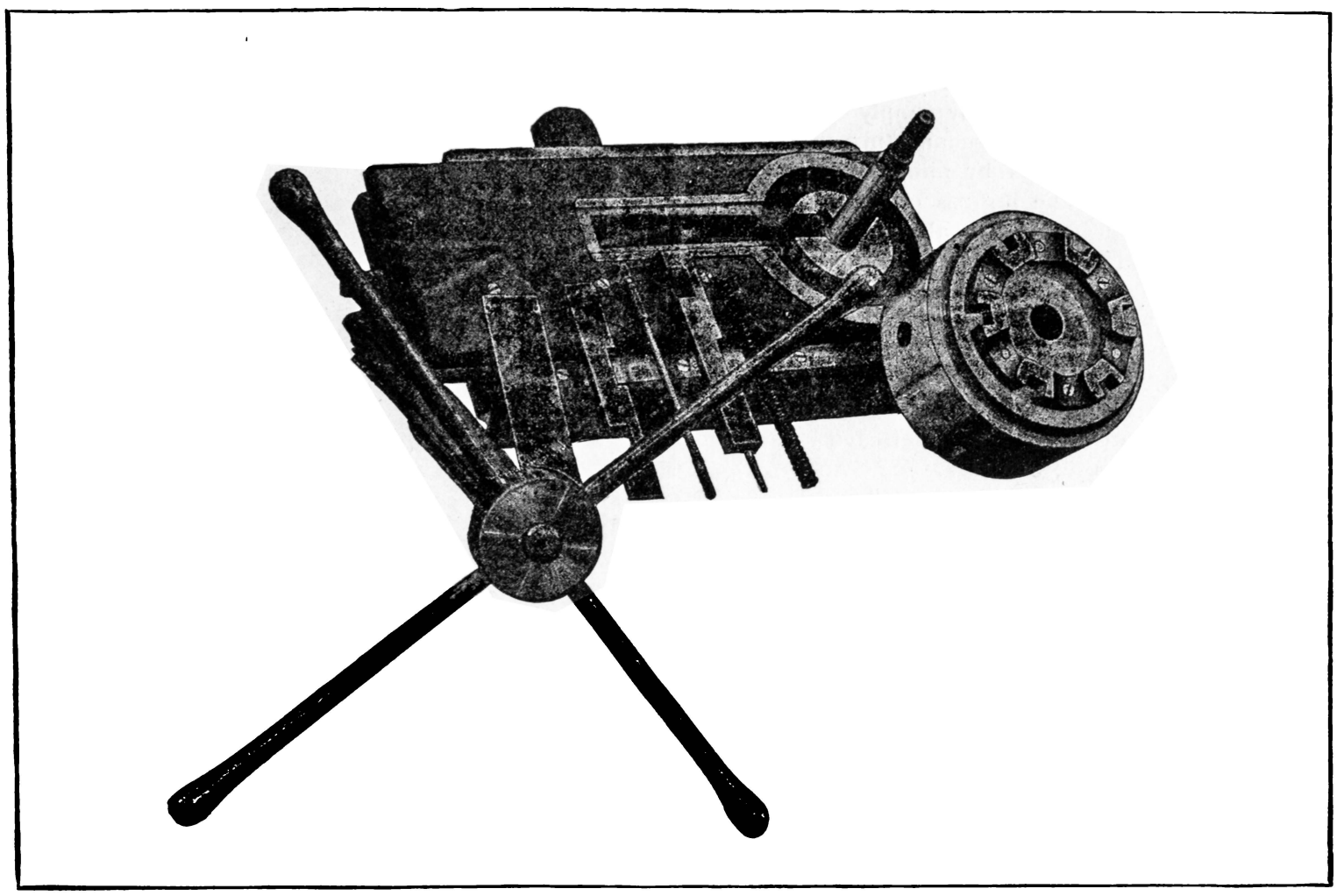

Fig. 491*a*.

Fig. 492 represents an 18-inch engine (or self-acting) lathe designed by and containing the patented improvements of S. W. Putnam, of the Putnam Tool Company, of Fitchburg, Massachusetts. The lathe has an elevating slide rest, self-acting feed traverse, and self-acting cross feed, both feeds being operative in either direction. It has also a feed rod for the ordinary tool feeding and a lead screw for screw-cutting purposes.

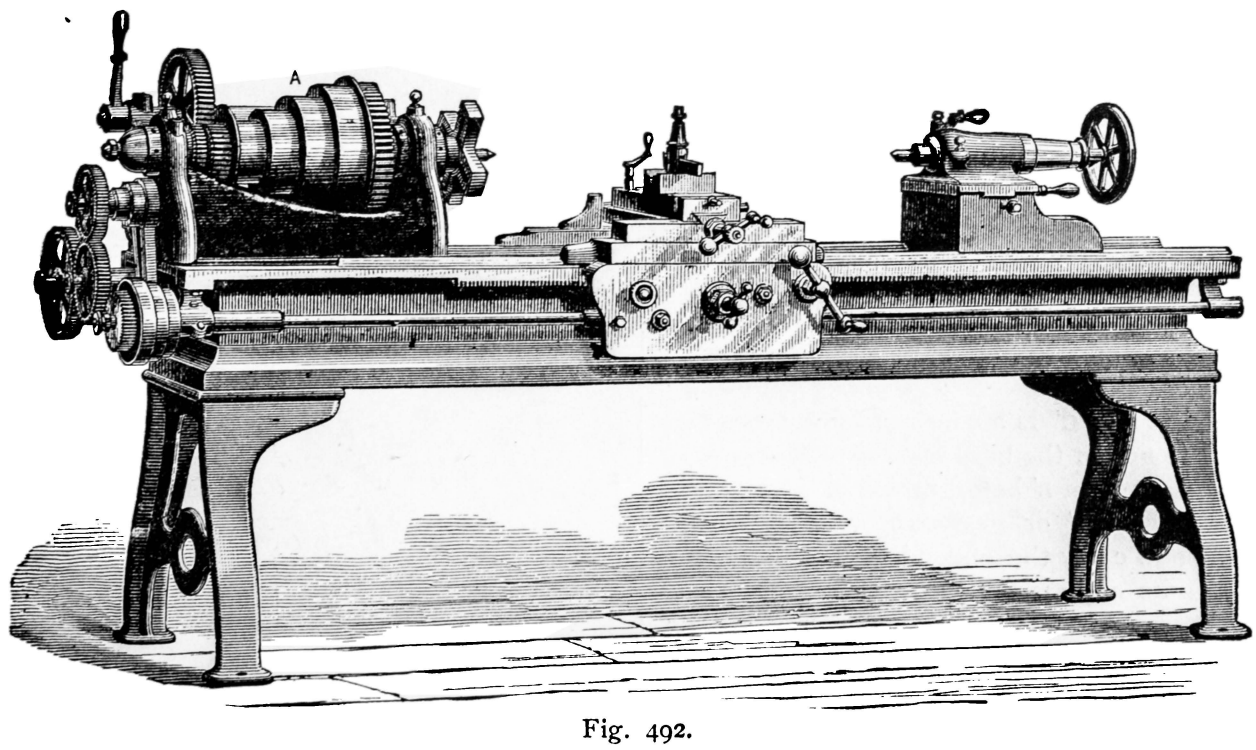

Fig. 492.

Fig. 493 represents a cross-sectional view of the shears beneath the headstock; A A are the shears or bed, having the raised Vs marked V′ and V on which the headstock and tailstock rest, and V″ and V‴ on which the carriage slides. A and A are the shears

connected at intervals by cross girts or webs B to stiffen them. C C are the bolts to secure the headstock to the shears. D is a bracket bolted to A′ and affording at E journal bearing for the spindle that operates the independent feed spindle. E is split at *f* and a piece of soft wood or similar compressible material is inserted in the split. The bolt F is operated to close the split, and, therefore, to adjust the bore E to properly fit the journal of the feed spindle, and as similar means are provided in various parts of the lathe to adjust the fits of journals and bearings the advantages of the system may here be pointed out. First, then, the fit of the bearing may be adjusted by simply operating the screw, and, therefore, without either disconnecting the parts or performing any fitting operation, as by filing. Secondly, the presence of the wood prevents the ingress of dust, &c., which would cause the bearings and journals to abrade; and, thirdly, the compression of the wood causes a resistance and pressure on the adjusting screw thread, which pressure serves to lock it and prevent it from loosening back of itself, as such screws are otherwise apt to do.

As the pressure of the tool cut falls mainly on the front side of the carriage, and as the weight of the carriage itself is greatest on that side, the wear is greatest; this is counteracted by forming the front V, marked V‴ in figure, at a less acute angle, which gives it more wearing area and causes the rest to lower less under a given amount of wear.

The rib A″ which is introduced to strengthen the shears against torsional strains, extends the full length of the shears.

Fig. 494 is a sectional side elevation of the headstock; A A′ represents the headstock carrying the bearing boxes B and B′,

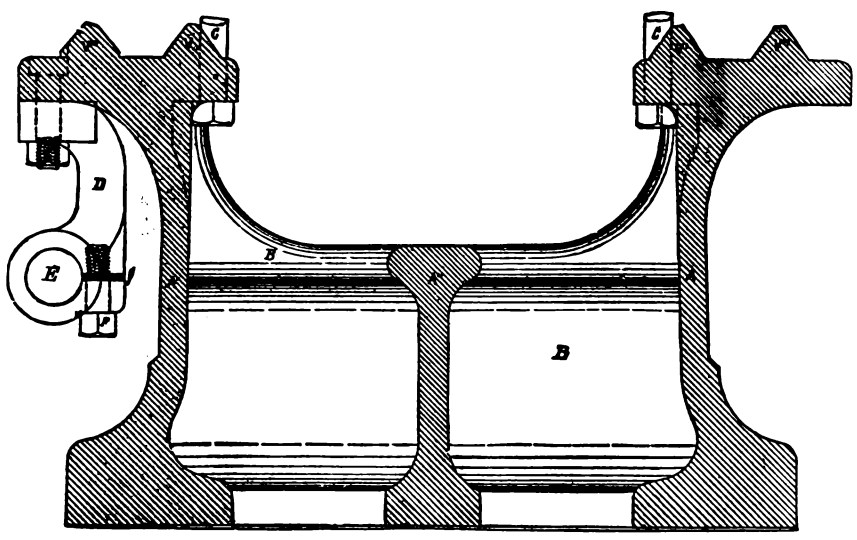

Fig. 493.

which are capable of bore closure so as to be made to accurately fit the spindle S by the construction of the front bearing B, being more clearly shown in Fig; 495; B is of composition brass, its external diameter being coned to fit the taper hole in the head; it is split through longitudinally, and is threaded at each end to receive the ring nuts C and C′. If C be loosened from contact with the radial face of A, then C′ may be screwed up, drawing B through the coned hole in A, and, therefore, causing its bore to close upon S.

At the other end of S, Fig. 496, C″ is a ring nut for drawing the journal box B′ through *a′* to adjust the bore of B′ to fit the journal of S, space to admit the passage of B′ being provided at *e*. D is a box nut serving to withdraw B′ or to secure it firmly in its adjusted position, and also to carry the end adjusting step E. F is a check nut to lock E in its adjusted position.

The method of preventing end motion to S is more clearly shown in Fig. 496, in which *h* is a steel washer enveloping S, having contact with the radial face of B′ and secured in its adjusted position by the check nuts *g*, hence it prevents S from moving forward to the right. *f* is a disk of raw hide let into E; the latter is threaded in D and is squared at the end within F to admit of the application of a wrench, hence E may be screwed in until it causes contact between the face of *f* and the end of S, thus preventing its motion to the left. By this construction the whole adjustment laterally of S is made with the short length from *h* to *f*, hence any difference of expansion (under varying temperature) between the spindle and the head A A′, or between the boxes and the spindle S, has no effect towards impairing the end fit of S in its bearings.

The method of adjusting the bearings to the spindle is as follows:—C″ and C′ are slackened back by means of a "spanner wrench" inserted in the holes provided for that purpose. C and D

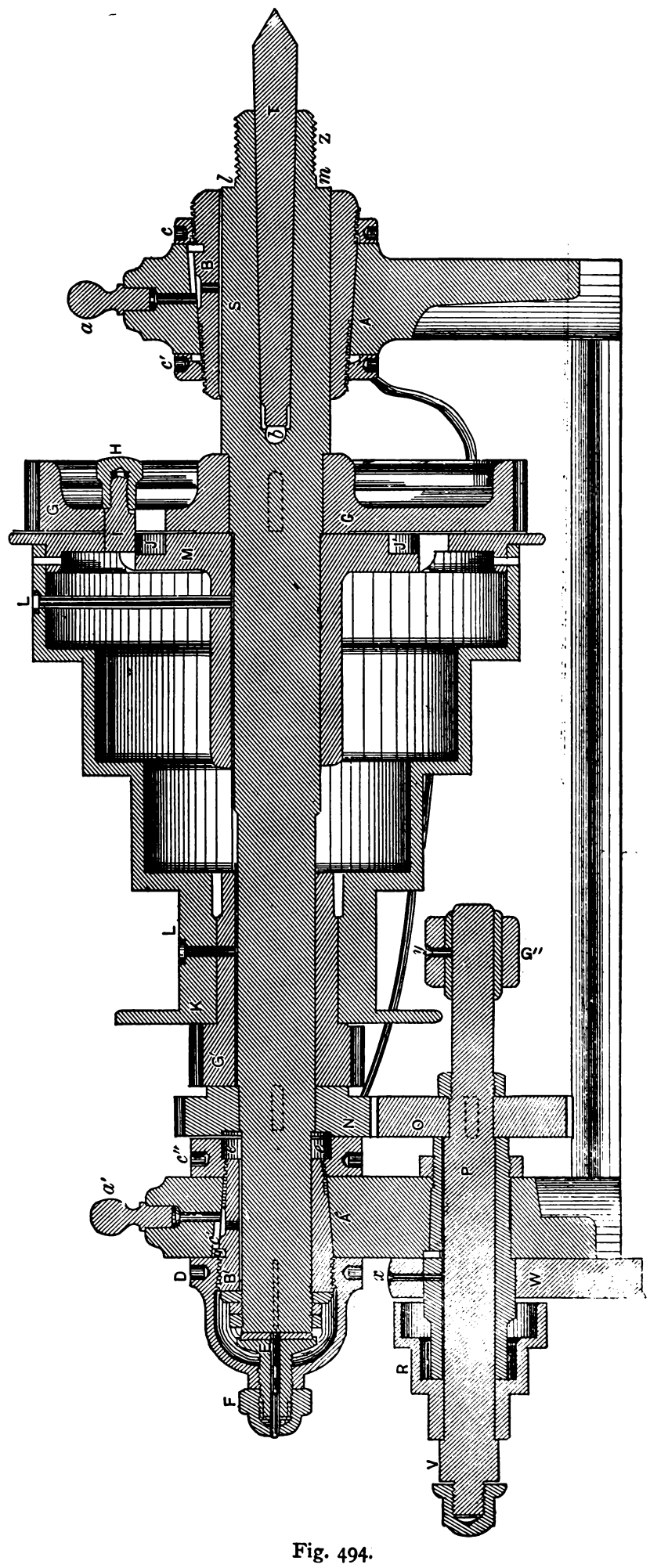

Fig. 494.

are then screwed up, withdrawing B and B′ respectively, and leaving the journal fit too easy. C′ is then screwed up until B is closed upon the spindle sufficiently that the belt being loose on the cone pulley, the latter moved by the hand placed upon the smallest step of the cone can just detect that there is contact between the bore of B and the spindle, then, while still moving the

cone, turn C′ back very slowly and a very little, the object being to relieve the bore of B from pressure against S. C may then be screwed up, firmly locking B in its adjusted position. C″ may then be operated to adjust B′ in a similar manner, and D screwed up to lock it in its adjusted position. Before, however, screwing up D it is better to remove F and release E from pressure against *f*, adjusting the end pressure of E after D has been screwed home against A′.

To prevent B and B′ from rotating in the head when the ring nuts are operated, each is provided with a pin, *q*, grooves *c* and *c′* permitting of the lateral movement of B and B′ for adjustment. The boxes B, B′ admit of being rotated in their sockets in A and A′ so as to assume different positions, the pins *q* and *q′* being removable from one to another of a series of holes in the boxes B, B′ when it is desired to partly rotate those boxes. The tops of the boxes are provided with oil holes, and the oil ways shown at *r*, *s* being the oil groove through the head and *a* simply a stopper to prevent the ingress of dust, &c.

The thread on S at Z, Fig. 494, is to receive and drive the face plates, chucks, &c., which are bored and threaded to fit over Z. To cause the radial faces of such face plates or chucks to run true, there is provided the plain cylindrical part *l*, to which the bore in the hub of the face plate or chuck is an accurate fit when the radial face of that hub meets the radial face *m*.

Referring again to Fig. 494, G′ is the pinion to drive the back gear while G receives motion from the back-gear pinion. The object of the back gear is to reduce the speed of rotation of S and to enable it to drive a heavier cut, which is accomplished as follows :—G′ is secured within the end K of the cone and is free to rotate with the cone upon S; at the other end the cone is secured to M, which is free to rotate upon S so far as its bore is concerned. G is fixed upon S and hence rotates at all times with it; but G may be locked to or released from M as follows :—

In G is a radial slot through which passes a bolt I provided with a cap nut H, in M is an annular groove J. When I is lifted its head passes into a recess in M, then H is screwed up and G is locked to M. This is the position of I when the back gear is not in use, the motion of the cone being communicated to S through I. But if H be loosened and I be moved inwards towards S, the head of I passes into the annular groove J, and the cone is free to rotate upon S while the latter and G remain stationary unless the back gear is put into operation. In this latter case the pinion G′ rotating with the cone drives the large gear of the back gear and the small pinion of the

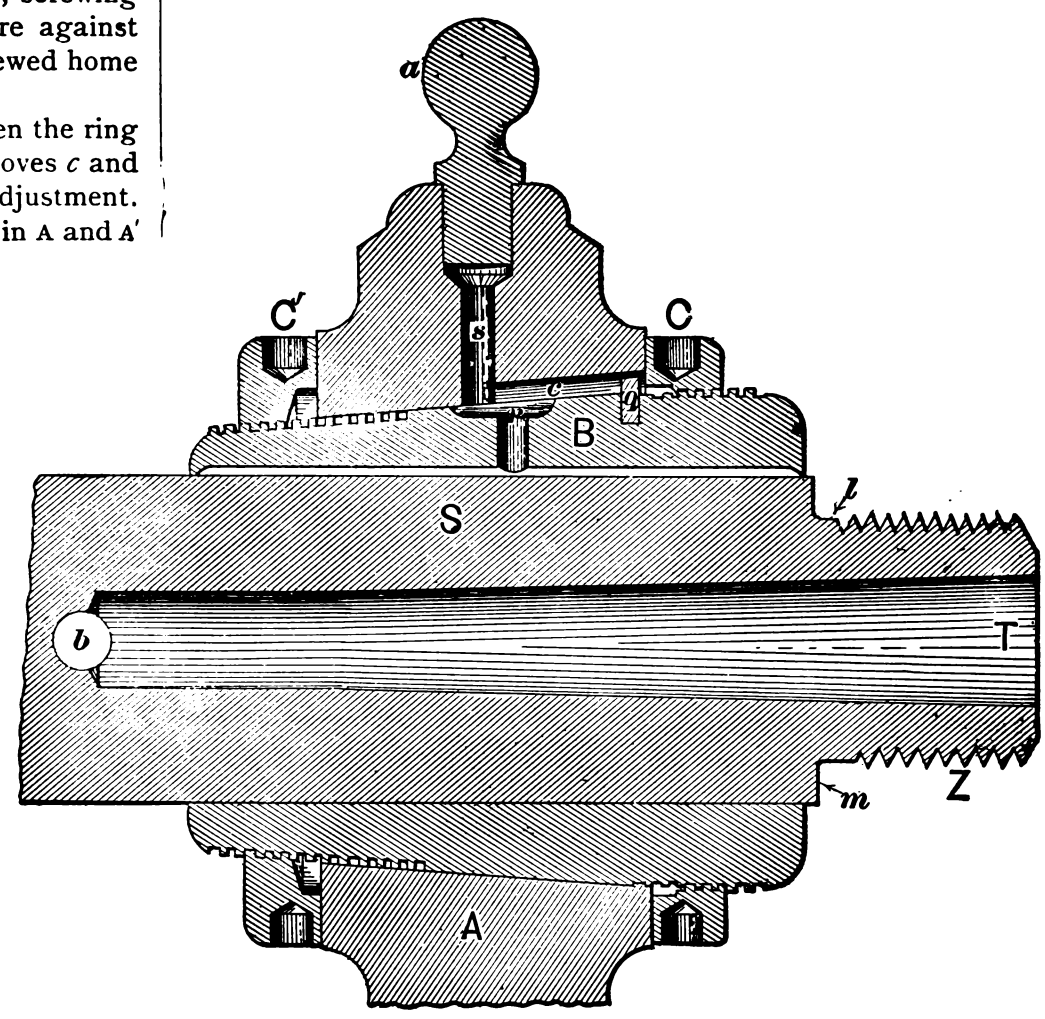

Fig. 495.

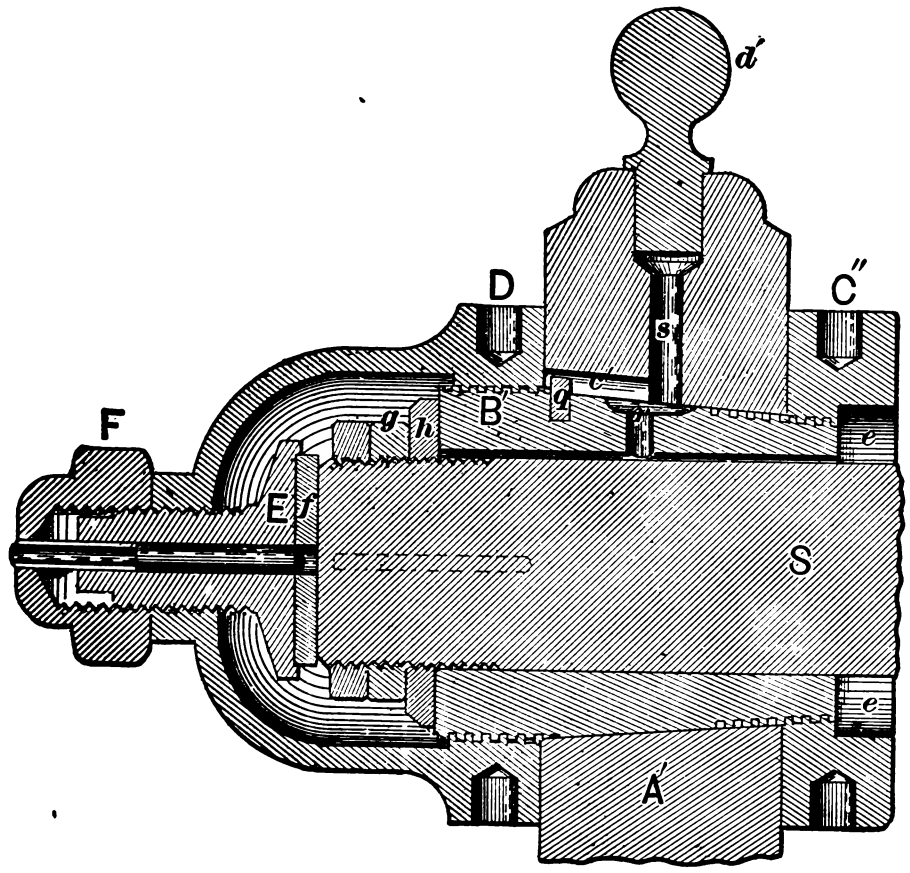

Fig. 496.

latter drives G, whose speed of rotation is reduced by reason of the relative proportions of the gear wheels.

In this case it is obvious that since the pulley rotates upon the spindle it requires lubrication, which is accomplished through the oil hole tubes L.

The means of giving motion to the feed spindle and lead screw are as follows :—N, Fig. 494, is a pinion fast upon S and operating the gear O, which is fast upon the spindle P, having journal bearing in a stem in A′ and also at G″. P drives the three-stepped cone R, which is connected by belt to a similar cone fast upon the independent feed spindle. The seat for the driving gear of the change wheels for the lead screw is on P at V. To provide ample bearing surface for P in A′ the bush or sleeve shown is employed, but this sleeve also serves to pivot the swing frame W which carries the studs for the change wheels that go between the wheel on V and that on the lead screw; *x y* are simply oil holes to lubricate P in its bearings.

To provide a wider range of tool feed than that obtainable by the steps on the feed cones, as R, they are provided at their ends with seats for change wheels, the swing frame W carrying the intermediate wheels for transmitting motion from V to a similar seat on the cone on the feed spindle.

Fig. 497 represents the tailstock (or tailblock as it is sometimes termed), shown in section. A represents the base which slides upon the raised Vs on the bed and carries the upper part B, in which slides the tail spindle C, which is operated longitudinally by the tail screw D, having journal bearing in E, and threaded through the nut F which is fast in C. The hand wheel G is for rotating D, whose thread operating in the nut F, causes C to slide within B in a direction determined by the direction of rotation of G. To lock C in its adjusted position the handled nut H is employed in connection with the bolt I, which is shown in dotted lines; C is split as shown by the dotted lines at *f*; J is the dead centre fitting accurately into a conical hole in C. When it is required to remove J from C the wheel G is operated to withdraw C entirely within B, and the end *d* of D meets the end *e* of J and forces J from the coned hole in C.

The method of securing the tailstock to the shears or releasing it from the same is as follows. A vertical prolongation of B affords at B″ a bearing surface for the nut-handle L and washer M. K is a bolt threaded into L passing through M, B″ and N, the latter of which it carries. N spans the shears beneath the two Vs on which the tailstock slides. Moving or rather partly rotating the handle L in the necessary direction lifts K and causes N to rise, and grip the shears beneath, while the pressure of M on B″ causes B to grip A and the latter to grip the raised Vs on the shears. If L be rotated in the opposite direction it will cause N to fall, leaving A free to slide along the shears. To prevent N from partly rotating when free, its ends are shaped to fit loosely between the shears as shown at *n*.

To give to N sufficient rise and fall to enable it to grip or fall entirely free from the shears with the small amount of rotary motion which the handle-lever L is enabled from its position to have, the following device is provided. M is a washer interposed between L and B″. This washer has upon it steps of different thickness as shown at M and *m*, the two thicknesses being formed by an incline as shown. The face of L has, as shown, similar steps; now as shown in the cut the step *l* on lever L meets the steps *m* of the washer, the handle having receded to the limit of its motion. The bolt K then has fallen to the amount due to unscrewing the threaded or nut end of L, and also to the amount of the difference of thickness at M and at *m* of the washer, the plate N being clear of the lathe-shears. But suppose the handle L be pulled towards the operator, then the surface *l* passing from a thin section on to a thick one as M of the washer, will lift the bolt K, causing N to meet the under surface of the shears, and then the motion of L continuing the pressure of the thread will bind or lock N to the bed.

The surface A′ in Fig. 497 affords a shelf or table whereon tools, &c., may be placed instead of lying on the lathe bed, where they may cause or receive damage.

Fig. 498 represents an end view of the tailstock viewed from the dead centre end, the same letters of reference applying to like parts that are shown in Fig. 497. The split at *f* is here shown to be filled with a piece of soft wood which prevents the ingress of dust, &c. At *d* is a cup or receptacle for oil, *e* being a stopper, having attached to it a wire pin flattened and of barb shape at the end, the object being to cause the wire to withdraw from the cup a drop of oil to lubricate the dead centre and centre in the work. The proximity of *e* to the dead centre makes this a great convenience, while the device uses much less oil than would be used by an oil can.

The method of setting over the upper part B to enable the turning of the diameter of work conical or taper instead of parallel is shown in figure: P and P′ are square-headed screws threaded into the walls of A and meeting at their ends the surface of B′. In A there is at *a* a wide groove or way, and on B there is at *b* a projection fitting into the way *a* so as to guide B when it

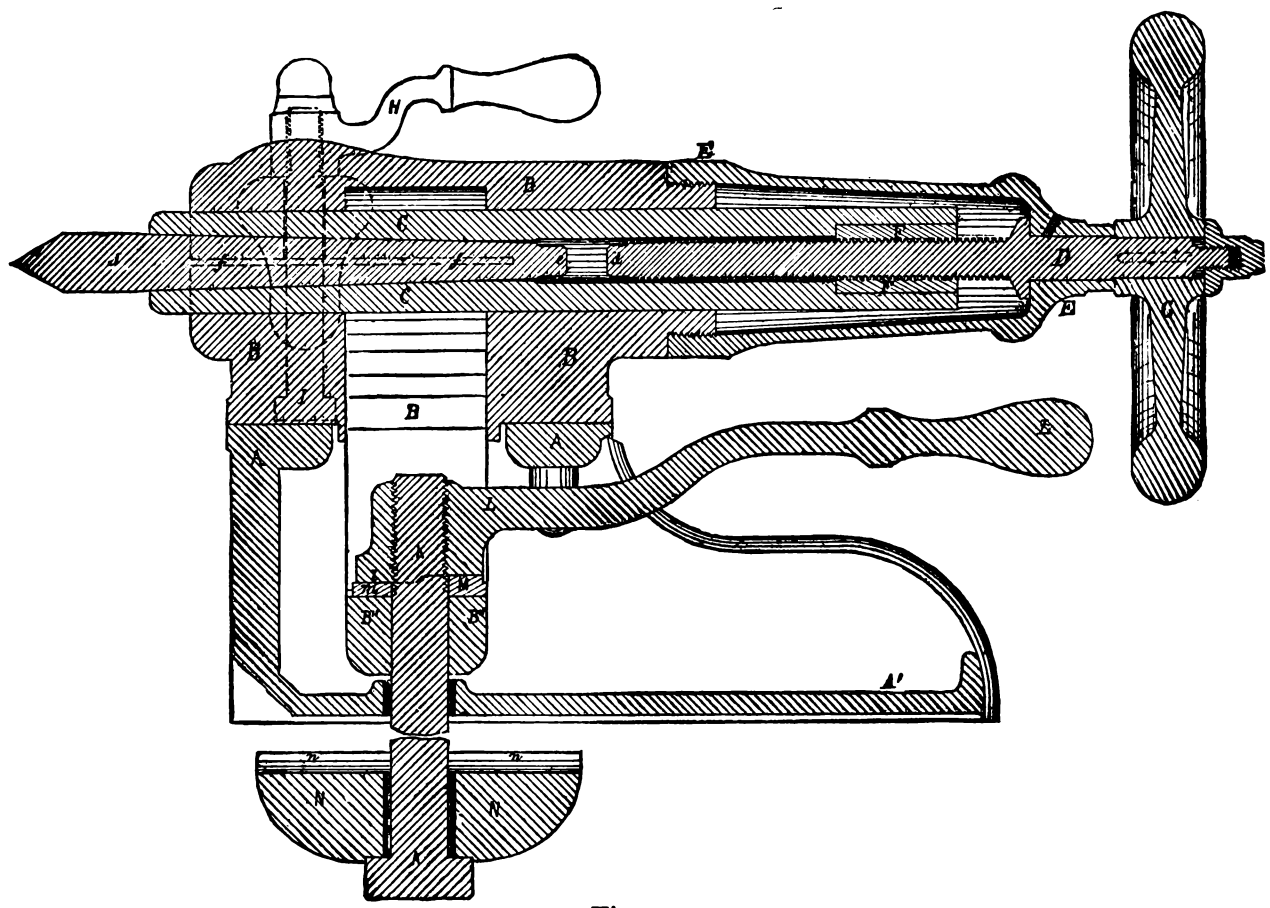

Fig. 497.

slides across A, as it will when P is unscrewed in A and P′ is screwed into A. This operation is termed setting over the tailstock, and its effect is as follows:—Suppose it be required to turn a piece of work of smaller diameter at the end which runs on the dead centre, then, by operating the screw P towards the front of the lathe (or to the left as shown in the cut) and screwing P′

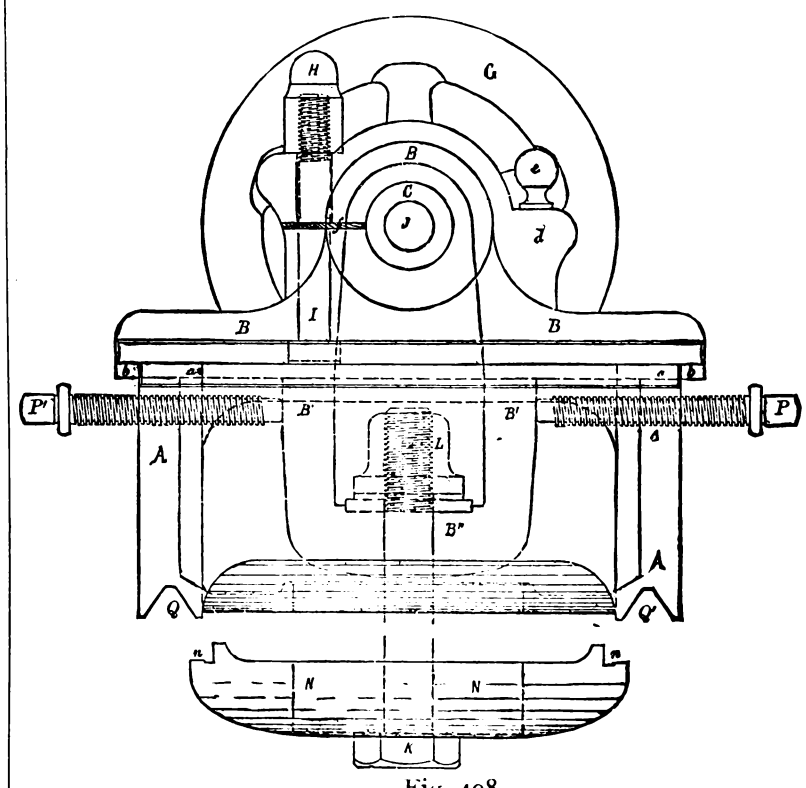

Fig. 498.

farther into A, the end of P′ will meet the surface of B′, causing B′ to move over, and the centre of the dead centre J (which is the axis of rotation of the work at that end) will be nearer to the point of the cutting tool. Or suppose the work requires to be turned a taper having its largest diameter at the end running on the dead centre, then P′ would be unscrewed and P screwed farther into A, carrying B farther towards the back of the lathe.

The V grooves Q and Q′ fit upon the inner raised Vs shown at V, V′ in Fig. 499.

Fig. 499 is a side view of the slide rest for holding and traversing the cutting tool. A represents the carriage resting upon the raised Vs marked V″ and V‴ and prevented from lifting by its own weight, and in front also by the gib *a* secured to A by the bolt *b* and having contact at *c* with the shears. A carries at *d* a pivot for the cross slide B and at *e* a ball pivot for the cross slide elevating screw C. This screw is threaded through the end of B so that by operating it that end of B may be raised or lowered to adjust the height of the cutting tool point to suit the work. To steady B there is provided (in addition to the pivots at *d*) on A two lugs *f*, between the vertical surfaces of which B is a close working fit. The upper surface of B is provided with a V-slide way *g*, to which is fitted the tool rest D (the construction being more clearly shown in Fig. 500).

The means for traversing D along the slide *g* on B is as follows :—

A nut *i* is secured to D by the screw bolt *j*, and threaded through the nut *i* is the cross-feed screw E, which has journal bearing in the piece *k*, which is screwed into the end face of B ; there is a collar on E which meets the inner end of *k*, and the handle F being secured by nut to that end of E its radial face forms a shoulder at *m* which with the collar prevents any end

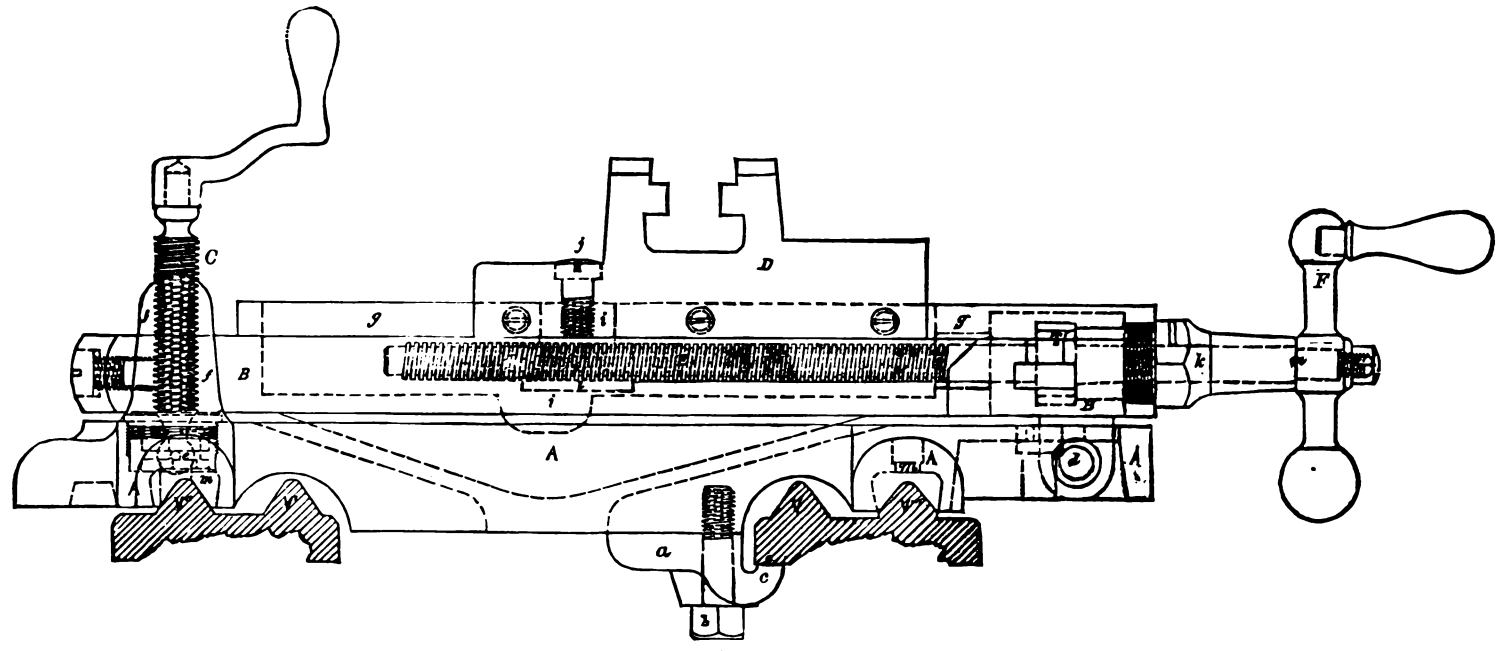

Fig. 499.

motion of E, so that when F is rotated E rotates and winds through the nut *i* which moves D along B.

An end view of A, B, and D is shown in Fig. 500, in which the letters of reference correspond to those in Fig. 499. B′ and B″ are the projections that pass into A and receive the pivoting screws *d* and *d*. To adjust the fit and take up any wear that may ensue on the slide *g*, on B and on the corresponding surface on D, the piece *n* is provided, being set up by the adjusting screws O.

To adjust the fit and take up the wear at the pivots *d* they are made slightly taper, fitting into correspondingly taper holes in B.

The dotted circle T′, represents a pinion fast upon the cross-feed screw (E, Fig. 499); the similar circles T and S″ also represent pinions, the three composing a part of the method of providing an automatic or self-acting cross feed or cross traverse to D by rotating it through a gear-wheel motion derived from the rotation of the independent feed spindle, as is described with reference to Fig. 501.

m in Fig. 500 represents a cavity or pocket to receive wool, cotton or other elastic or fibrous material to be saturated with oil and thus lubricate the raised Vs while keeping dirt from passing between the rest and the Vs. The shape of these pockets is such as to enable them to hold the cotton with a slight degree of pressure against the slides, thus insuring contact between them.

The mechanical devices for giving to the carriage a self-acting traverse in either direction along the bed, so as to feed the tool automatically to its cut, and for giving to the tool rest (D, Fig. 499) traverse motion so as to feed the tool to or from the line of centres along the cross slide, are shown in Fig. 501, which presents two views of the feed table or apron. The lower view supposes the feed table to be detached from the carriage and turned around so as to present a side elevation of the mechanism. The upper view is a plan of the same with two pinions (N and N′), omitted. A represents the part of the lathe carriage shown at A in Fig. 500. It has two bolts *p* and *p*′, which secure the apron G, Fig. 501, to A. At H is the independent feed spindle or feed rod operated by belt from the cone pulley R, Fig. 494, or by a gear on

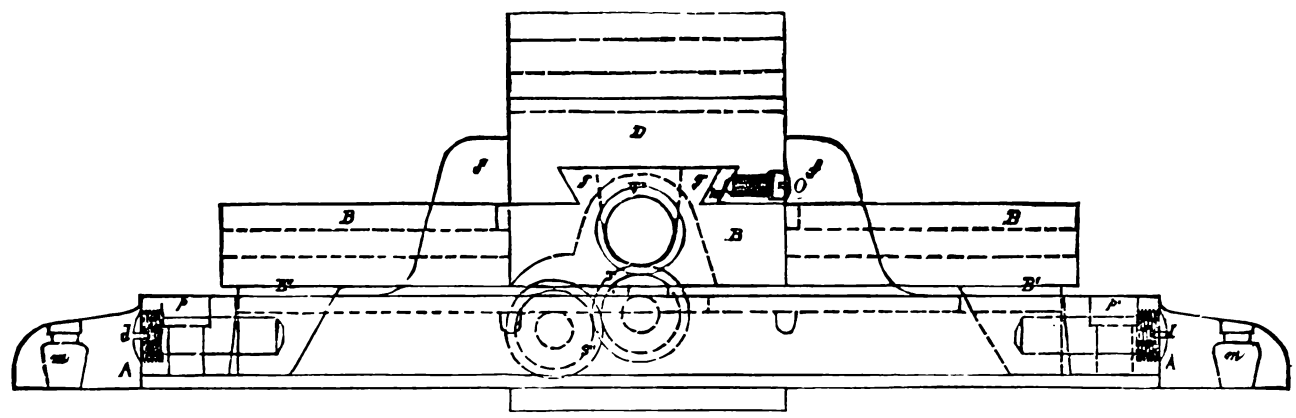

Fig. 500.

stud P at V. H is carried in bearings fixed to each end of the lathe shears or bed, both of these bearings being seen in Fig. 492. H is also provided with a bearing fixed on the feed apron as seen in Fig. 501, and is splined as shown at *h*. At I is a bracket fast upon the apron G and affording journal bearing to J, which is a bevel pinion having a hub which has journal bearing in the bracket I. The fit of the bearing to the journal is here again adjusted by a split in the bearing with a screw passing through the split and threaded in the lower half (similar to the construction of D in Fig. 493); J is bored to receive H, and is driven by means of a feather projecting into the spline *h*. When therefore, the carriage A is moved it carries with it the apron G, and this carries the bracket I holding the bevel pinion J, which is in

gear with the bevel-wheel K, and therefore operates it when H has rotary motion. At the back of K, and in one piece with it, is a pinion K′, both being carried upon the stud L; pivoted upon this same stud is a plate lever M, carrying two pinions N and N′ in gear together, but N only is in gear with K′, hence K′ drives N and N drives N′. Now in the position shown neither N or N′ is in gear with the gear-wheel O, but either of them may be placed in gear with it by means of the following construction:—

At the upper end of M there is provided a handle stud M′ passing through the slot M″ in G. Screwing up this stud locks M fast by binding it against the surface of G. Suppose, then, M′ to be unscrewed, then if it be moved to the right in the slot M″, N will be brought into gear with O and the motion will be transmitted in the direction of the arrows, and screwing up N would retain the gear in that position. But suppose that instead of moving M′ to the right it be moved to the left, then N′ will be brought into gear with O and the direction of rotation of O will be reversed.

lathe and a section of which is shown in the cut, the whole feed table or apron will be made to traverse along the lathe shears.

The direction in which this traverse will take place depends upon the adjusted position of M′ in M″, or in other words upon whether N or N′ be the pinion placed in gear with O. As shown in the cut neither of them is in gear, and motion from H would be communicated to N and N′ and would there cease; but if M′ be raised in the slot M″, N would drive O, and supposing P′ to be held to O, the motion of all the gears would be as denoted by the arrows, and the lathe carriage A would traverse along the lathe bed in the direction of arrow Q″. But if N′ be made to drive O all the motions would be in the opposite directions. The self-acting feed motion thus described is obviously employed to feed the cutting tool, being too slow in its operation for use to simply move the carriage from one part of the lathe bed to another; means for this purpose or for feeding the carriage and cutting tool by hand

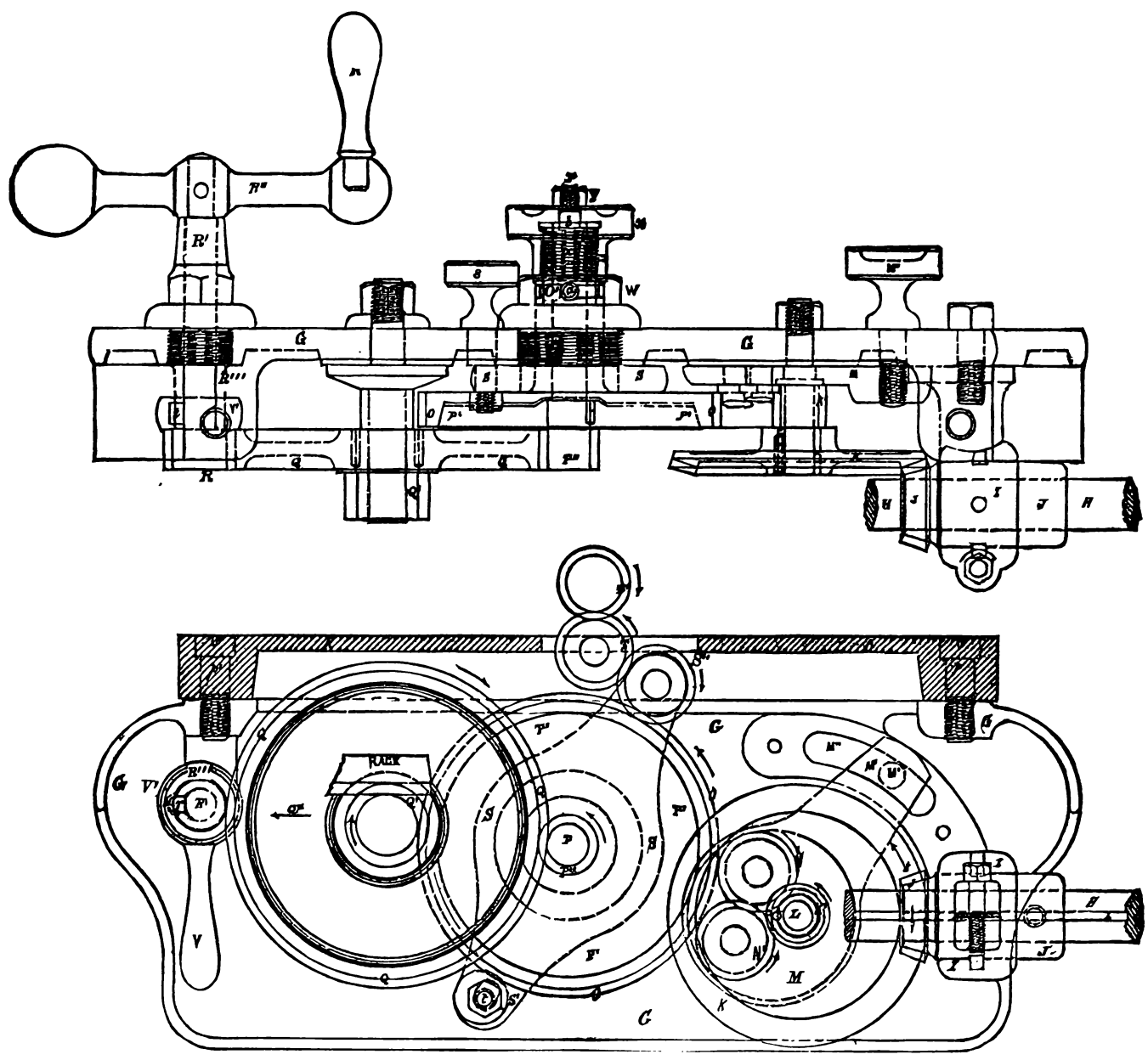

Fig. 501.

Thus, then, O may be made to remain stationary or to rotate in either direction according to the position of M′ in the slot M″, and this position may be regulated at will.

The gear O contains in its radial face a conical recess, and upon the same stud or pin (P) upon which O is pivoted, there is fixed the disk P′, which is in one piece with the pinion P″; the edge of P′ is coned to fit the recess in the wheel O, so that if the stud P is operated to force the disk P′ into the coned recess in O the motion of wheel O will be communicated to disk P′, by reason of the friction between their two coned surfaces. Or if P be operated to force the coned edge of the disk out of contact with the coned bore or recess in gear O, then O will rotate while P′ and P″ will remain stationary. Suppose the coned surfaces to be brought (by operating x) into contact and P′ to rotate with O, then P″ being in gear with wheel Q will cause it to rotate. Now Q is fast to the pinion Q′, hence it will also rotate, and being in contact with the rack which is fixed along the shears of the

are provided as follows:—R is a pinion in gear with Q and fast upon the stud R′, which is operated by the handle R″. The motion of R″ passes from R to Q and Q′ which is in gear with the rack. But Q′ being in gear with P″ the latter also rotates, motion ceasing at this point because the cone on P′ is not in contact with the coned recess in O. When, however, P′ and O are in contact and in motion, that motion is transmitted to R″, which cannot then be operated by hand.

It is often necessary when operating the cross feed to lock the carriage upon the lathe bed so that it shall not move and alter the depth of the tool-cut on the radial face of the work. One method of doing this is to throw off the belt that operates the feed spindle H, place N in gear with O and P′ in contact with O, so that the transverse feed motion will be in action, and then pull by hand the cone pulley driving H, thus feeding the tool to its necessary depth of cut. The objection to this method, however, is that when the operator is at the end of the lathe, operating the feed

cone by hand he cannot see the tool and can but guess how deep a cut he has put on. To overcome this difficulty a brake is provided to the pinion R as follows :—

The brake whose handle is shown at V has a hub V′ enveloping the hub R″ which affords journal bearing to the stud R′. In the bore of this hub V′ is an eccentric groove, and in R‴ is a pin projecting into the eccentric groove and meeting at its other end the surface of the stud R′. When, therefore, V is swung in the required direction (to the left as presented in the cut), the cam groove in V′ forces *r* inwards, gripping it and preventing it from moving, and hence the movement of R which also locks Q and Q′.

It remains now to describe the method of giving rotary motion to the cross-feed screw E (Fig. 499) so as to enable it to self-act in either direction. S is a lever pivoted upon the hub of O and carrying at one end the pinion S″, while at the other end is a stud S′ passing through a slot in G. The pinion S″ is in gear with O and would therefore receive rotary motion from it and communicate such motion to pinion T, which in turn imparts rotary motion to T′. Now T′ is fast upon the cross-feed screw as shown in Fig. 499 and the cross-feed screw E in that figure would by reason of the nut *i* in figure cause the tool rest D to traverse along the cross-slide in a direction depending upon the direction of motion of T′, which may be governed as follows :—

If S′ be moved to the left S″ will be out of gear with T and the cross-feed screw may be operated by the handle (F, Fig. 499). If S′ be in the position shown in cut and M″ also in the position there shown (Fig. 501), operating the feed screw by its handle would cause its pinion T′ to operate T, S″, and O ; hence S′ should always be placed to disconnect S″ from T when the cross-feed screw is to be operated by hand, and S′ operated to connect them only when the self-acting cross feed is to operate. In this way when the cross feed is operated by hand T′ and T will be the only gears having motion. It has been shown that the direction of motion of O is governed by the position of M′, or in other words, is governed by which of the two pinions N or N′ operates, and as O drives S″ its motion, and therefore that of T′, is reversible by operating M′.

The construction of S′ is as follows :—Within the apron as shown in the side elevation it consists of what may be described as a crank, its pin being at *t* ; in the feed table is a slot through which the shaft of the crank passes ; *s* is a handle for operating the crank. By rotating *s* the end S′ of S is caused to swing, the crank journal moving in the slot to accommodate the motion and permit S to swing on its centre.

The device for forcing the cone disk P′ into contact with or releasing it from O is as follows :—The stud P is fast at the other end in P′ and has a collar at *b* ; the face of this collar forms one

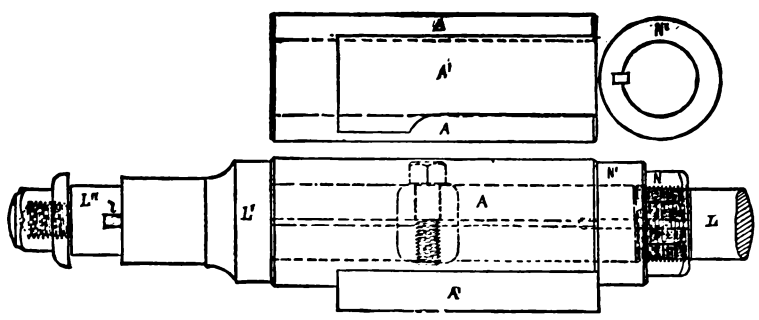

Fig. 502.

radial face, and the nut W affords the other radial face, preventing end motion to *x* without moving P endwise. If *x* be rotated its thread at *x′* causes it to move laterally, carrying P with it, and P being fast to P′ also moves it laterally. P′ is maintained from end motion by a groove at O′ in which the end of a screw *a* projects, *a* screwing through W and into the groove O′.

The lead screw of a lathe is a screw for operating the lathe carriage when it is desired to cut threads upon the work. It is carried parallel to the lathe shears after the same manner as the independent feed spindle, and is operated by the change wheels shown in Fig. 492 at the end of the lathe. These wheels are termed change wheels on account of their requiring to be changed for every varying pitch of thread to be cut, so that their relative diameters, or, what is the same thing, their relative number of teeth, shall be such as to give to the lead screw the speed of rotation per lathe revolution necessary to cut upon the work a thread or screw of the required pitch.

The construction of the bearings which carry the lead screw in the S. W. Putnam's improved lathe is shown in Fig. 502, in which A represents the bearing box for the headstock end of the lathe, having the foot A′ as a base to bolt it to the lathe shears. L represents the lead screw, having on one side of A the collar L′ and on the other the nut and washer N and N′. The seat for the change wheel that operates the lead screw is at L″, the stop pin *l* fitting into a recess in the change wheel so as to form a driving pin to the lead screw. The washer N′ is provided with a feather fitting into a recess into L so that it shall rotate with L and shall

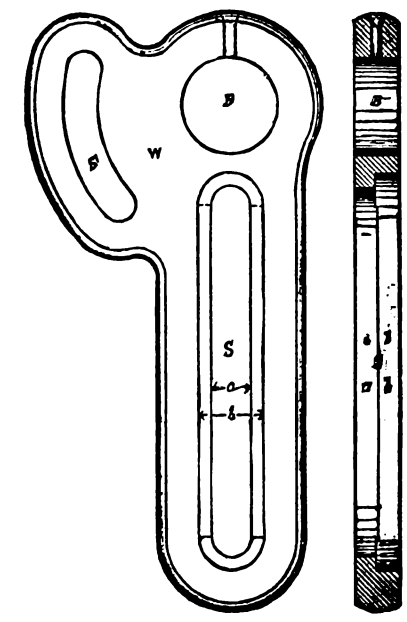

Fig. 503.

prevent the nut N from loosening back as it would be otherwise apt to do. End motion to L is therefore prevented by the radial faces of L′ and N′.

At the other end of the lathe there are no collars on the lead screw, hence when it expands or contracts, which it will do throughout its whole length under variations of atmospheric temperature, it is free to pass through the bearing and will not be deflected, bent, or under any tension, as would be the case if there were collars at the ends of both bearings. The amount of this variation under given temperatures depends upon the difference in the coefficients of expansion for the metal of which the lead screw and the lathe shears are composed, the shears being of cast iron while lead screws are sometimes of wrought iron and sometimes of steel.

The bearings at both ends are split, with soft wood placed in the split and a screw to close the split and adjust the bearing bore to fit the journal, in the manner already described with reference to other parts of this lathe.

The construction of the swing frame for carrying the change wheels that go between the driving stud V, Fig. 494, and that on the seat L″, Fig. 502, are as follows :—

Fig. 503 represents the change wheel swing frame, an edge view of which is partly shown at W in Fig. 494. S is a slot narrower at *a* than at *b*. Into this slot fit the studs for carrying the change wheels.

By enabling a feed traverse in either direction the lathe carriage may be traversed back (for screw-cutting operations) without the aid of an extra overhead pulley to reverse the direction of rotation of the lathe, but in long screws it is an advantage to have such extra overhead pulley and to so proportion it as to make the lathe rotate quicker backwards than forward, so as to save time in running the carriage back.

The mechanical devices for transmitting motion from the lead screw to the carriage are shown in Fig. 504, representing a view from the end and one from the back of the lathe. B is a frame or casting bolted by the bolt *b* to the carriage A of the lathe. C is a disk having a handle C′ and having rotary motion from its centre. Instead of being pivoted at its centre, however, it is guided in its rotary motion by fitting at *d d* into a cylindrical recess provided

in B to receive it. C contains two slots D and D′ running entirely through it. These slots are not concentric but eccentric to the centre of motion of C. Through these slots there pass two stud bolts E and E′ shown by dotted lines in Fig. 504, and these bolts perform two services: first by reason of the nuts F and F′ they hold C to its place in B, and next they screw into and operate the two halves G and G′ of a nut.

Suppose, now, that the handle C′ be operated or moved towards

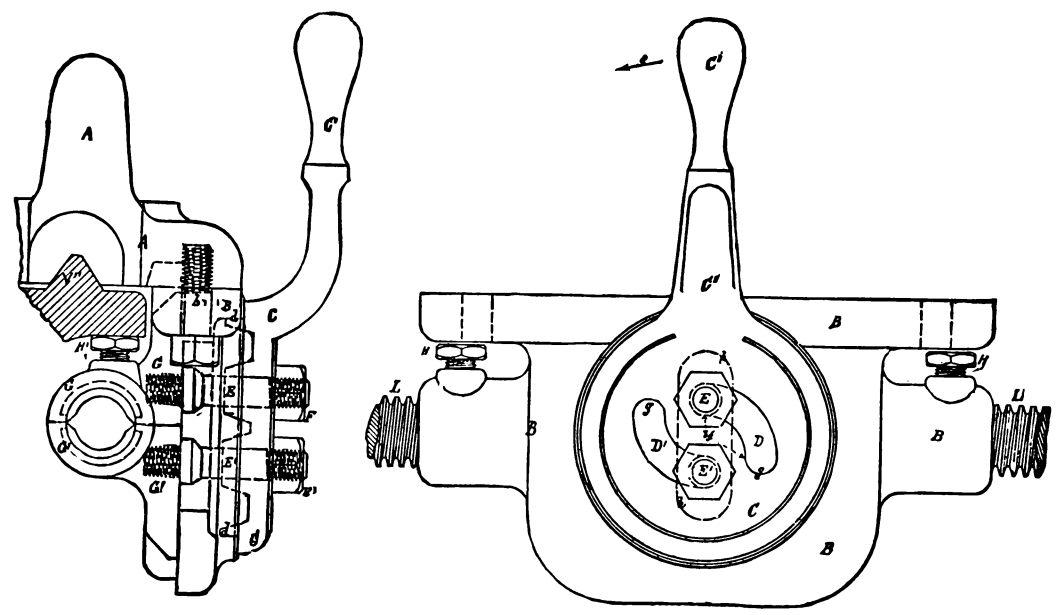

Fig. 504.

arrow *e*, then the dot at *f* being the centre of its motion and the slots D and D′ gradually receding from *f* as their ends *g* are approached they will cause E to move vertically upward and E′ to move vertically downward, a slot in B (which slot is denoted by the dotted lines *h*) guiding them and permitting this vertical movement.

Since E and E′ carry the two halves of the nut which envelops the lead screw L it is obvious that operating C′ will either close or release the half nuts from L according to which direction it (C′) is moved in.

The screws H and H′ screw tightly into B, and the radial faces of their heads are made to have a fair and full bearing against the underside of the shears, so that they serve as back gibs to hold the carriage to the shears and may be operated to adjust the fit or to lock the carriage to the bed if occasion may require.

This lathe is made with a simple tool rest as shown in the engravings or with a compound slide rest. In some sizes the rest is held to the carriage by a weight upon a principle to be hereafter described. The bed is made (as is usual) of any length to suit the purposes for which the lathe is to be used.

The next addition to the lathe as it appears in the United States is that of a compound slide rest.

Fig. 505 represents a 28-inch swing lathe by the Ames Manufacturing Company, of Chicopee, Massachusetts. It is provided with the usual self-acting feed motion and also with a compound slide rest. The swing frame for the studs carrying the change wheels for screw cutting here swings upon the end of the lead screw, the same spindle that carries the driving cone for the independent feed rod which is in front of the lathe, also carries the driving gear for the change wheels used for screw cutting.

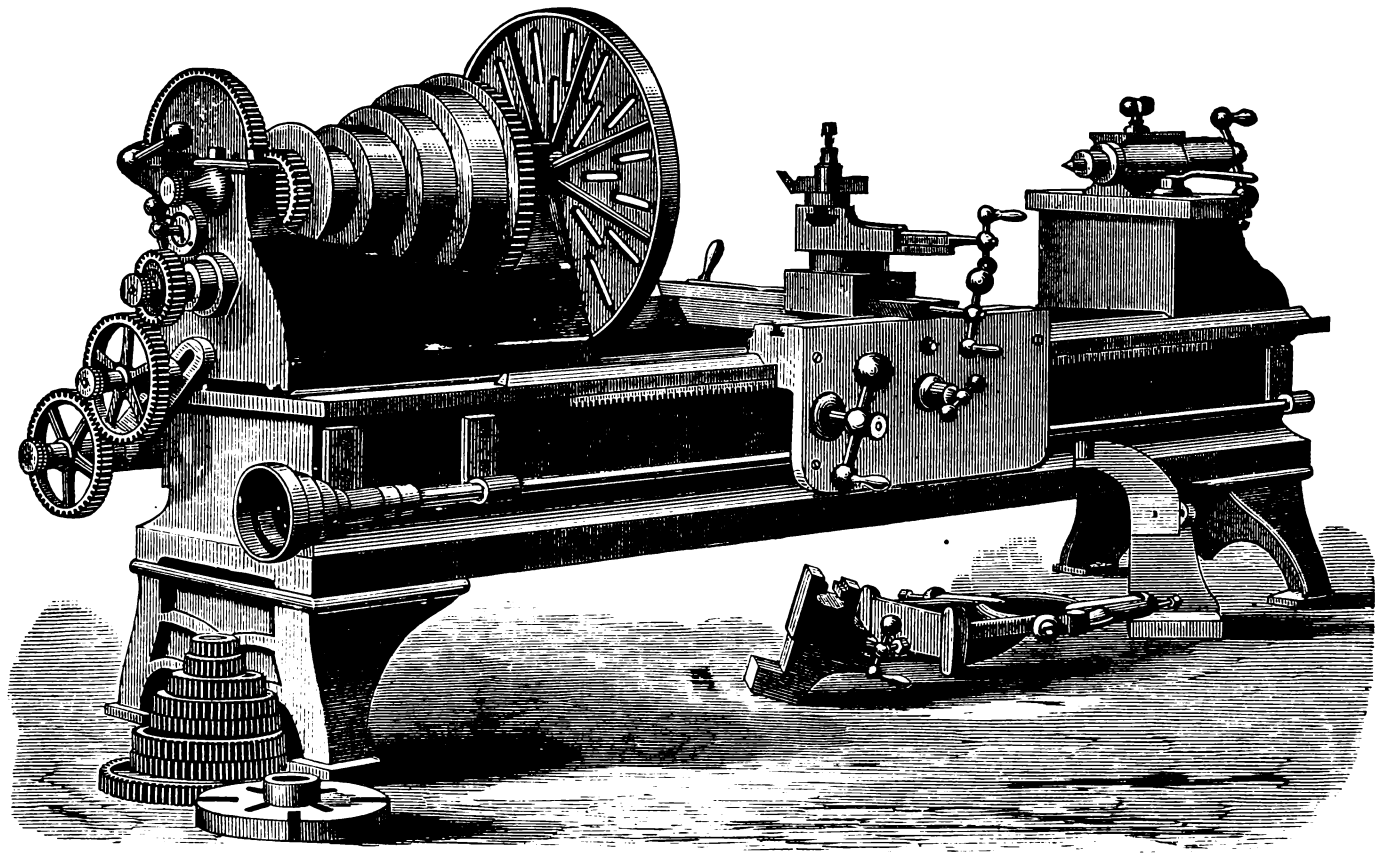

Fig. 505.

The construction of the compound rest is shown in Figs. 506 and 507. N is the nut for the cross-feed screw (not shown in the cut) and is carried in the slide A. A and the piece L above it are virtually in one, since the latter is made separate for convenience of construction and then secured to it firmly by screws. B is made separate from C also for convenience of construction and fixed to it by screws; L is provided with a conical circular recess into which the foot B of C fits. E is a segment of a circle operated by the set screw F to either grip or release B. The bolt D simply serves as a pivot for piece B C: at its foot C is circular and is divided

off into the degrees of a circle to facilitate setting it to any designated angle.

If, then, F be unscrewed, C may be rotated and set to the required angle, in which position screwing up F will lock it through the medium of E. G is the feed nut for the upper slider H, which operates along a slide way provided on C, the upper feed screw having journal bearing at C'. I is the tool post, having a stepped

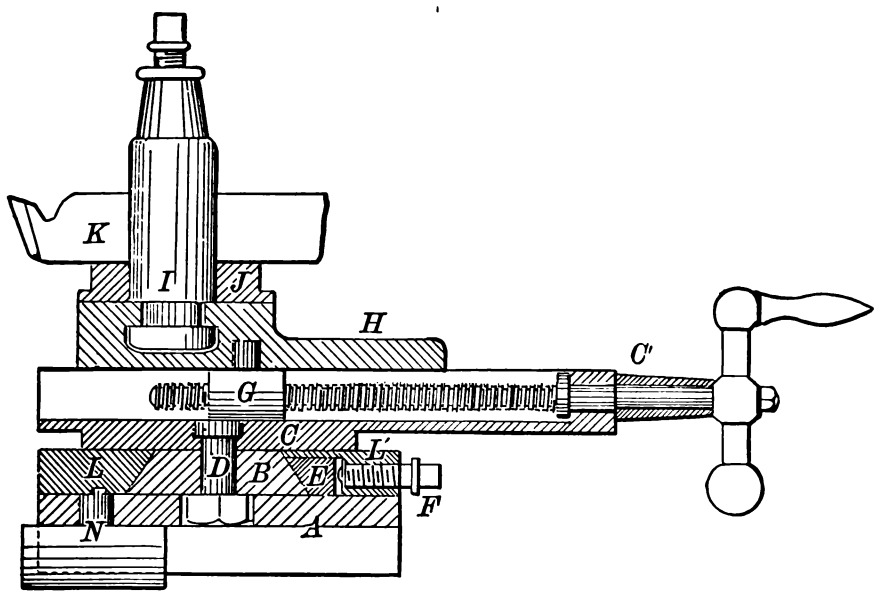

Fig. 506.

washer J, by means of which the height of the tool K may be regulated to suit the work.

Suppose, now, that it be required to turn a shaft having a parallel and a taper part; then the carriage may be traversed to turn the parallel part, and the compound slide C may be set to turn the taper part, while the lower feed screw operating in N may be used to turn radial faces.

The object of making A and L in two pieces is to enable the boring and insertion of B, which is done as follows:—The front end of L as L' is planed out, leaving in it a groove equal in diameter and depth to the diameter and depth of B, so that B may be inserted laterally along this groove to its place in L. The segment E is then inserted and a piece is then fitted in at L' and held fast to A by screws. It is into this piece that the set screw F is threaded.

Various forms of construction are designed for compound rests, but the object in all is to provide an upper sliding piece carrying the tool holder, such sliding piece being capable of being so set and firmly fixed that it will feed the tool at an angle to the line of the lathe centres.

Another and valuable feature of the compound rest is that it affords an excellent method of putting on a very fine cut or of

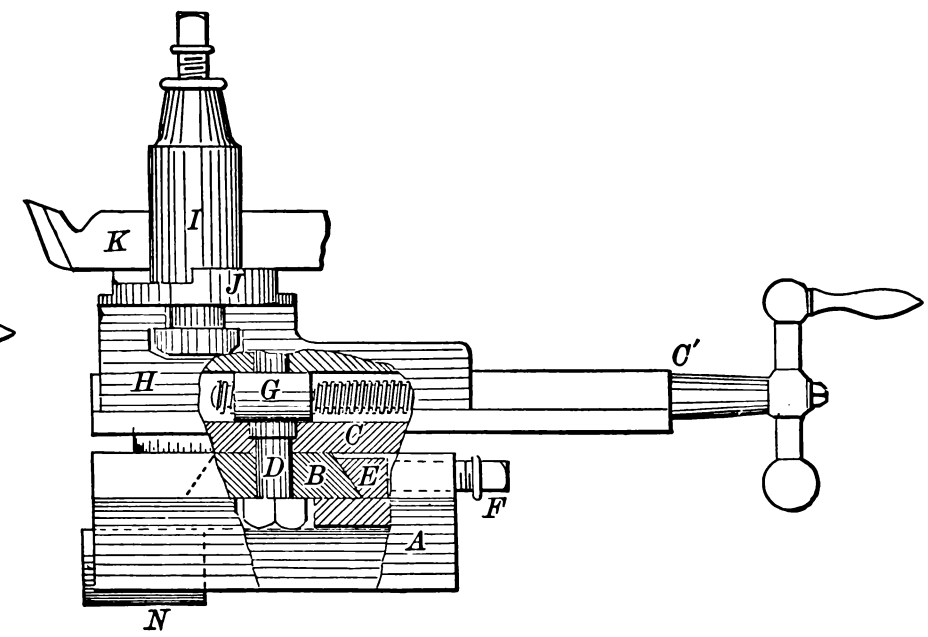

Fig. 507.

accurately setting the depth of cut to turn to an exact diameter; this is accomplished by setting the upper slide at a slight angle to the line of centres and feeding the tool to the depth of cut by means of the screw operating the upper slide. In this way the amount of feed screw handle motion is increased in proportion to the amount to which the tool point moves towards the line of lathe centres, hence a delicate adjustment of depth of cut may be more easily made.

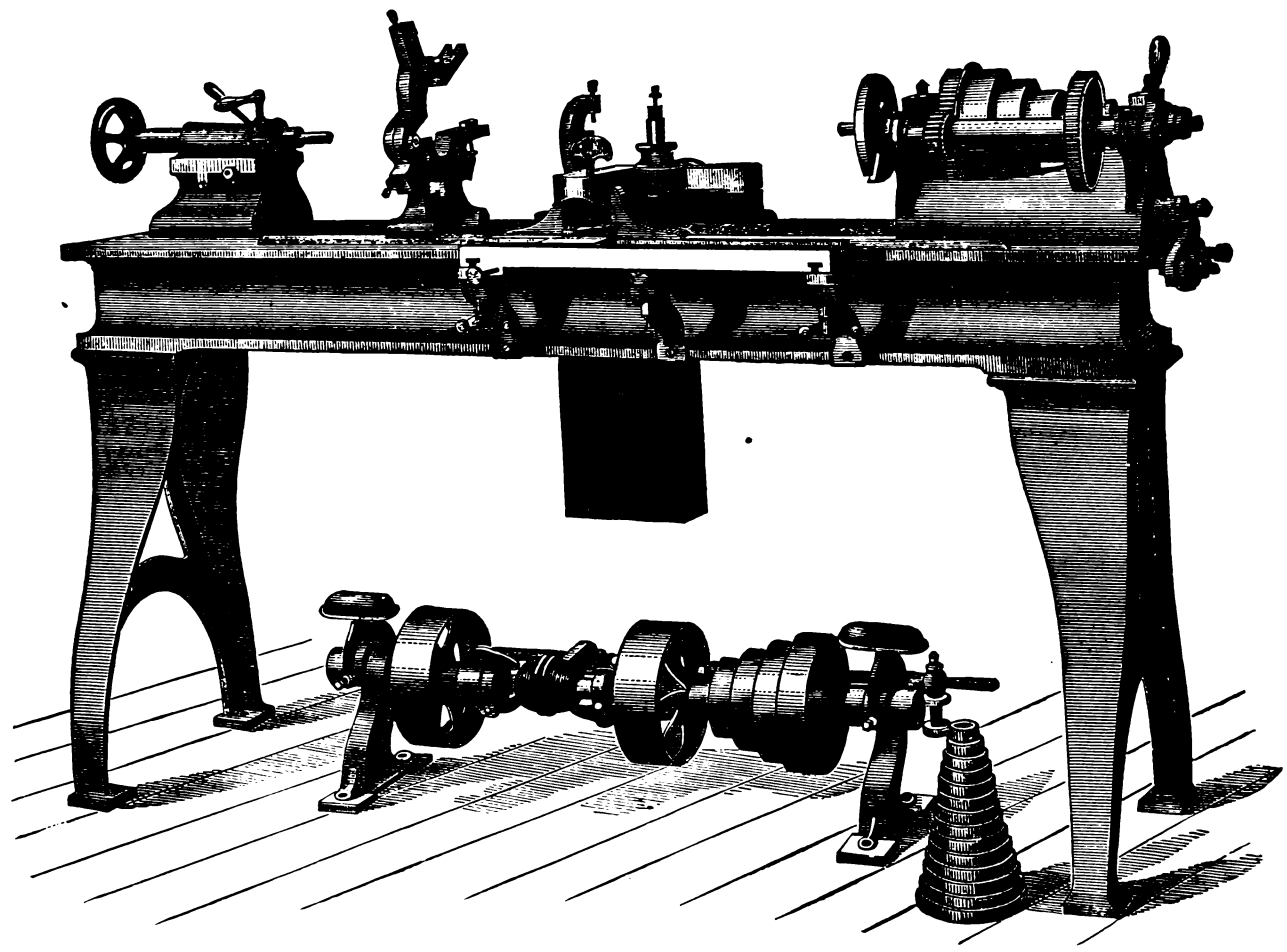

Fig. 508.

Suppose, for example, that a cut be started and that it is not quite sufficiently deep, then, while the carriage traverse is still proceeding, the compound rest may be operated to increase the cut depth, or if it be started to have too deep a cut the compound rest may be operated to withdraw the tool and lessen its depth of cut. Or it may be used to feed the tool in sharp corners when the feed traverse is thrown out, or to turn the tops of

collars or flanges when the tailstock is set over to turn a taper.

It is obvious, however, that comparatively short tapers only can be conveniently turned by a compound slide rest; but most tapers, however, are short.

To turn long tapers the tailstock of the lathe is set over as described with reference to the Putnam lathe, but for boring deep

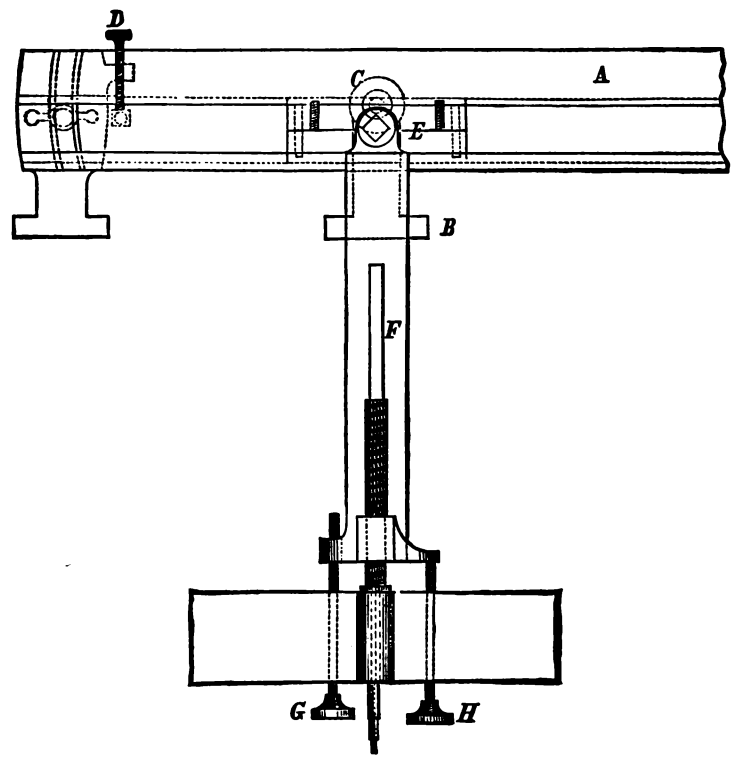

Fig. 509.

holes the slide rest must either be a compound one or a taper turning former or attachment must be employed.

When, however, the tailstock is set over, the centres in the work are apt to wear out of true and move their location (the causes of which will be hereafter explained).

In addition to this, however, the employment of a taper turning attachment enables the boring of taper holes without the use of a compound slide rest, thus increasing the capacity of the lathe not having a simple or single rest.

In Fig. 508 is shown a back view of a Pratt and Whitney weighted lathe having a Slate's taper turning attachment, the construction of which is as follows:—Upon the back of the lathe shears are three brackets having their upper surfaces parallel with and in the same plane as the surface of the lathe shears. Pivoted to the middle bracket is a bar which has at each end a projection or lug fitting into grooves provided in the end brackets, these grooves being arcs of a circle whose centre is the axis of the pivot in the middle bracket.

The end brackets are provided with handled nuts upon bolts, by which means the bar may be fixed at any adjusted angle to the lathe shears. Upon the upper surface of the bar is a groove or way in which slides a sliding block or die, so that this die in traversing the groove will move in a straight line but at an angle to the lathe bed corresponding to the angle at which the bar may be adjusted. The slide rest upon being connected by a bar or rod to the die or sliding block is therefore made to travel at the same angle to the lathe bed or line of centres as that to which the bar is set. The method of accomplishing this in the lathe, shown in Fig. 508, is as follows:—

In Fig. 509 A is the bar pivoted at C upon the centre bracket B; E is the sliding block pivoted to the nut bar F. This nut bar carries the cross-feed nut, which in turn carries the feed screw and hence the tool rest. When the nut bar is attached to the sliding block to turn a taper it is free to move endways upon the lower part of the carriage in which it slides, but when the taper attachment is not in use the bar is fastened to the lower part of the carriage by a set screw.

The screw at D is provided to enable an accurate adjustment for the angle of the bar A. G and H are screws simply serving to adjust the diameter to which the tool will turn after the manner shown in Fig. 588, G being for external and H for internal work.

When the lathe has a bed of sufficient length to require it, a slide is provided to receive the brackets, which may be adjusted to any required position along the slide, as shown in Fig. 510. This is a gibbed instead of a weighted lathe, and the method of attaching the sliding block to the lathe rest is as follows:—

A separate rod is pivoted to the sliding block. This rod carries at its other end a small cross head which affords general bearing to the end of the cross-feed screw, which has a collar on one side of the cross head and a fixed washer on the other, to prevent any end motion of the said screw.

The cross-feed nut is attached to the traversing cross slide. The other or handle end of the cross-feed screw has simple journal bearing in the slide rest, but no radial faces to prevent end motion, so that one may from the rod attached to the sliding-block

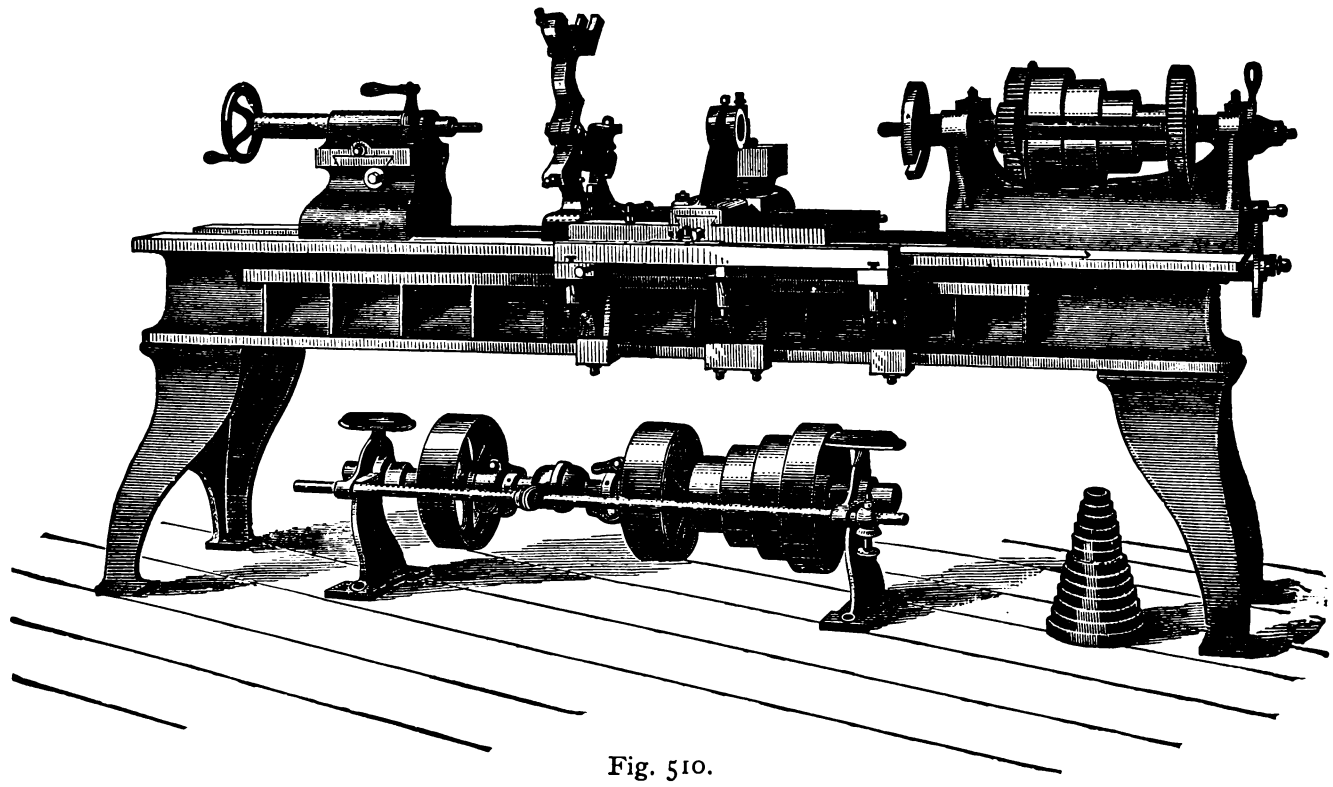

Fig. 510.

traverse the cross-feed slide, which will carry with it the feed screw. As a result, the line of motion of the tool rest is governed by the sliding die, but the diameter to which the tool will turn is determined by the feed screw in the usual manner. When it is not required to use the taper attachment, the rod or spindle is detached from the sliding die and is locked by a clamp, when the rest may be operated in the usual manner.

Fig. 511 represents a slide rest for turning shafting in which two cutting tools are employed simultaneously, that at the

back of the rest being turned upside down, as shown in the figure.

The lower cross feed screw is right and left handed, so as to operate both tool rests, while each rest has in addition an independent feed screw.

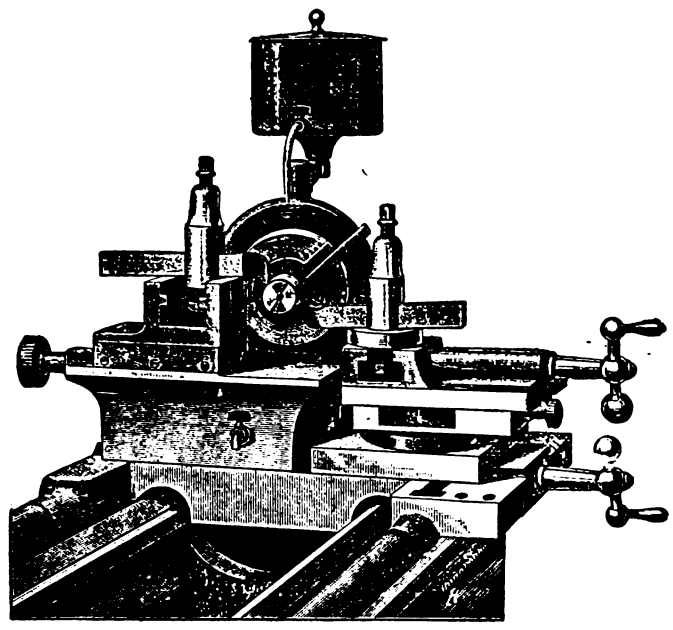

Fig. 511.

Fig. 512 represents the New Haven Manufacturing Company's three tool slide rest, for turning shafting. It is provided with a follower rest, in front of which are two cutting tools for the roughing cuts, and behind which is a third tool for the finishing cut. The follower rest receives bushes, bored to the requisite diameter, to leave a finishing cut. The first tool takes the preliminary roughing cut; the second tool turns the shaft down to fit the bush or collar in the follower rest; and, as stated, the last tool finishes the work.

Fig. 513 represents a 44-inch swing lathe, showing an extra and detachable slide rest, bolted on one side of the carriage and intended for turning work of too large a diameter to swing over the slide rest. By means of this extra rest the cutting tool can be held close in the rest, instead of requiring to stand out from the tool-post to a distance equal to the width of the work. The ordinary tool post is placed in this extra rest.

When it is desired to bolt work on the lathe carriage and rotate the cutting tools, as in the case of using boring bars, the cross slide is sunk into instead of standing above the top surface of the carriage so as to leave a flat surface to bolt the work to, and T-shaped slots are provided in the carriage, to receive bolts for fastening the work to the carriage, an example of this kind being shown in Fig. 514.

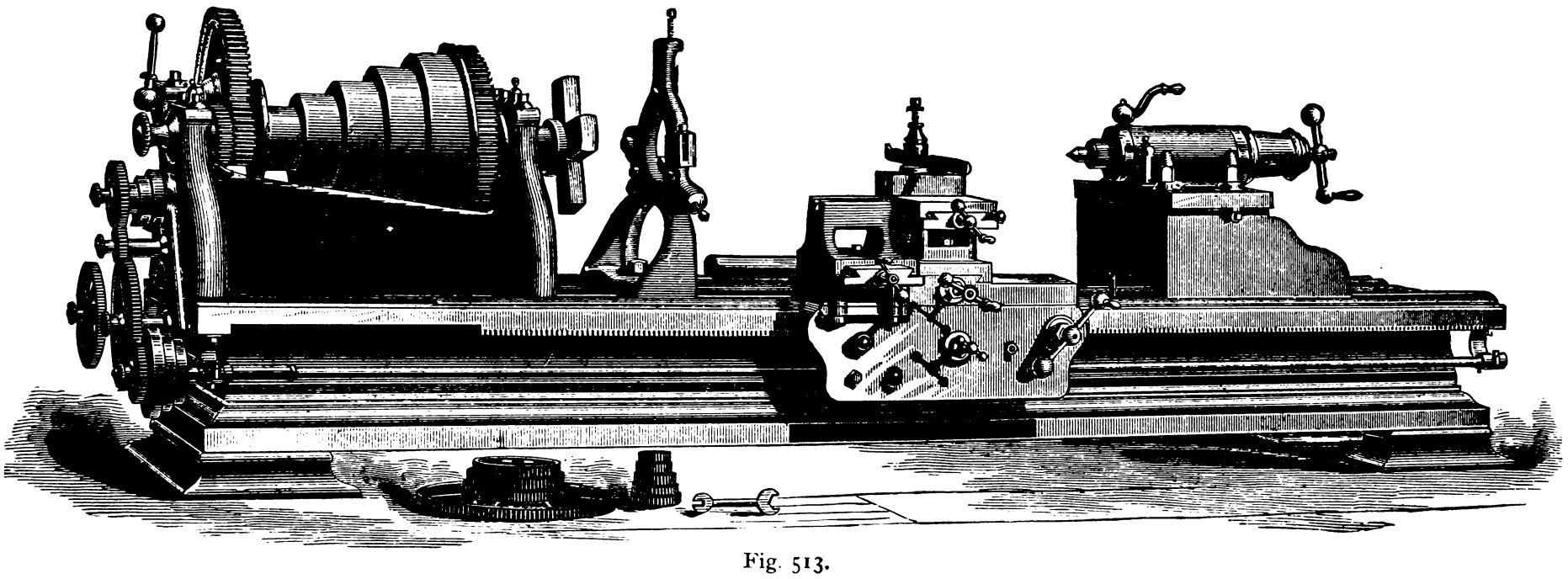

Fig. 513.

Fig. 515 represents a self-acting slide or engine lathe by William Sellers and Co., of Philadelphia. These lathes are made in various sizes from 12 inches up to 48 inches swing on the same general design, possessing the following features:— The beds or shears are made with flat tops, the carriage being gibbed to the edges of the shears, these edges being at a right angle to the top face of the bed. The dead centre spindle is locked at each end of its bearing in the tailstock, thus securing it firmly in line with the live spindle. The ordinary tool feed is operated by a feed rod in front of the lathe, and this rod is operated by a disc feed, which may be altered without stopping the lathe so as to vary the rate of tool feed; and an index is provided whereby the operator may at once set the discs to give the required rate of feed. The lead screw for screw cutting is

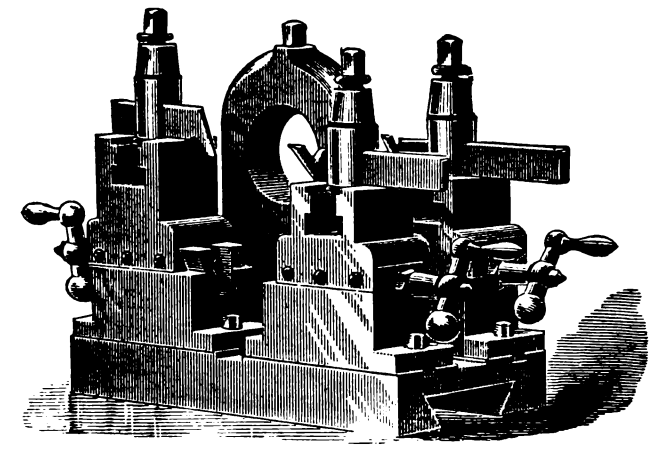

Fig. 512.

placed in a trough running inside the lathe bed, so that it is nearer to the cutting tool than if placed outside that bed, while it is entirely protected from the lathe cuttings and from dirt or dust; and the feed-driving mechanism is so arranged that both may be in gear with the live spindle, and either the rod feed or screw-cutting feed may be put into action instantly, while putting one into action throws the other out, and thus avoid the breakage that occurs when both may be put into action at the same time. The direction of the turning feed is determined by the motion of a lever conveniently placed on the lathe carriage, and the feed may be stopped or started in either direction instantly. The mechanism for putting the cross feed in action is so constructed (in those lathes having a self-acting cross feed) that the cross feed cannot be in action at the same time as the turning feed or carriage traverse by rod feed.

Lathes of 12 and 16 inches swing are back-geared, affording six changes of speed, and the lathe tool has a vertical adjustment on a single slide rest. Lathes of 20 inches swing are back-geared with eight changes of speed. Lathes of 25 inches and up to 48 inches swing inclusive are triple-geared, affording fifteen changes of speed, having a uniformly progressive variation at each change.

The construction of the live head or headstock for a 36-inch

lathe is shown in the sectional side view in Fig. 516, and in the top view in Fig. 517, and it will be seen that there are five changes of speed on the cone, five with the ordinary back-gear, and five additional ones obtained by means of an extra pinion on the end of the back-gear spindle, and gearing with the teeth on the circumference of the face plate, the ordinary pinion of the back-gear moving on the back-gear spindle so as to be out of the way and clear the large gear on the cone spindle when the wheel of the extra back-gear pinion is in use, as shown in Fig. 517.

The front bearing of the live spindle is made of large diameter to give rigidity, and the usual collar for the face plate to screw against is thus dispensed with. End motion to the live spindle is prevented by a collar of hardened steel, this collar being fast on the live spindle and abutting on one side against the end face of the back bearing and on the other against a hardened steel thrust collar.

All these parts are enclosed in a tight cast-iron tail-block, which serves as an oil well to insure constant and perfect lubrication. The surfaces which confine the revolving collar back and front are so adjusted as to allow perfect freedom of rotary motion to the spindle and collar, but no perceptible end motion. The securing of the live spindle endwise is thus confined to the thickness of the steel collar only, and this is so enclosed in a large mass of cast iron as to insure uniformity of temperature in all its parts, hence there is no liability for the live spindle to stick or jam in its bearings, while the expansion of the live spindle endways from this collar (if it expands more than the lathe head) is allowed for in freedom of end motion through the front journal, which is a little longer than the bearing it runs in. In turning work held between the lathe centres the end thrust is taken against the hardened steel collar on the live spindle, and the hardened steel collar at the back of it, while in turning work chucked to the face plate the spindle is held in place endways by the confinement of the steel collar on the spindle between the steel collar behind it and the back end of the back bearing. With this arrangement of the spindle the change from turning between the lathe centres and turning chucked work requires no thought or attention to be given to any adjustment of the live spindle to accommodate it for the changed condition of end pressure between turning between the centres and turning chucked work, as is the case in ordinary lathes.

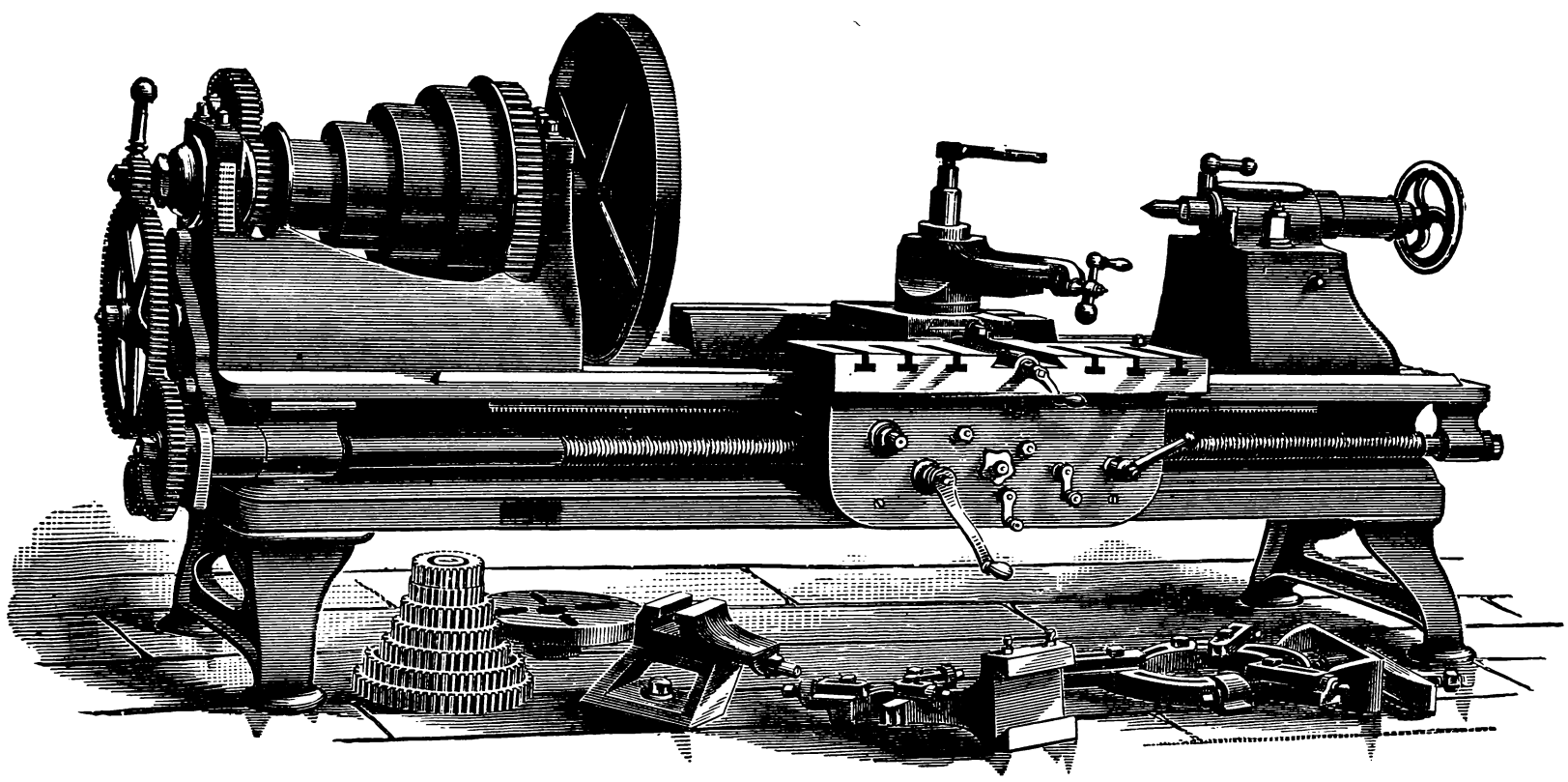

Fig. 514.

The double-geared lathes, as those of 12, 16 and 20 inches swing, are provided with face plates that unscrew from the live spindle to afford convenience for changing from one size of face plate to another, and all such lathes have their front live spindle journal made of sufficiently enlarged diameter above that of the screw, to afford a shoulder for the face plate to abut against. The nose of the live spindle is not threaded along its entire length, but a portion next to the shoulder is made truly cylindrical but without any thread upon it, and to this unthreaded part the face plate accurately fits so that it is held true thereby, and the screw may fit somewhat loosely so that all the friction acts to hold the

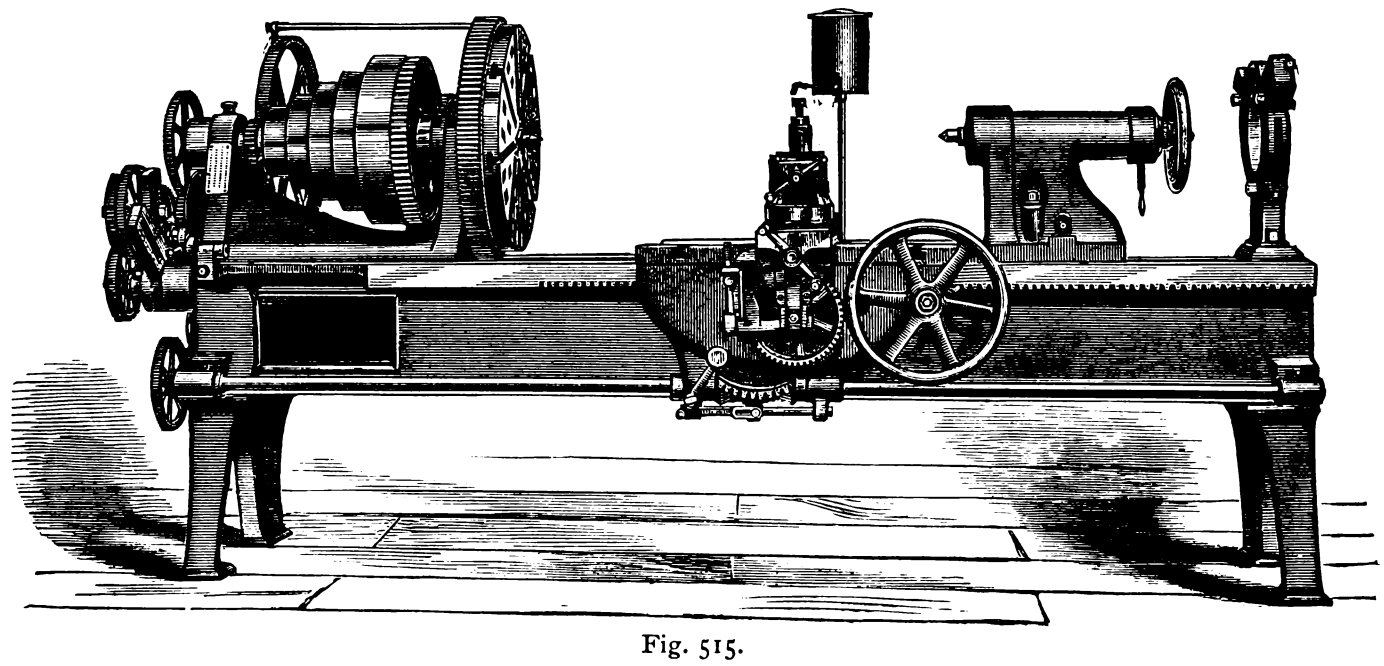

Fig. 515.

face plate true and hard up against the trued face of the spindle journal. Face plates fitted in this way may be taken off and replaced as often as need be, with the assurance that they will be true when in place unless the surfaces have been abused in their fitting parts.

The construction of the tailstock or poppet-head, as it is sometimes termed, is shown in Figs. 518, 519, and 520. To hold it in line with the live spindle it is fitted between the inner edges of the bed, and it will be seen that one of the bed flanges (that on the left of the figure) is provided on its under side with a V, and the clamp is provided with a corresponding V, so that in tightening up the bolt that secures the tailstock to the bed the tailstock is drawn up to the edge of the shears, and therefore truly in line with the live spindle, while when this bolt is released the

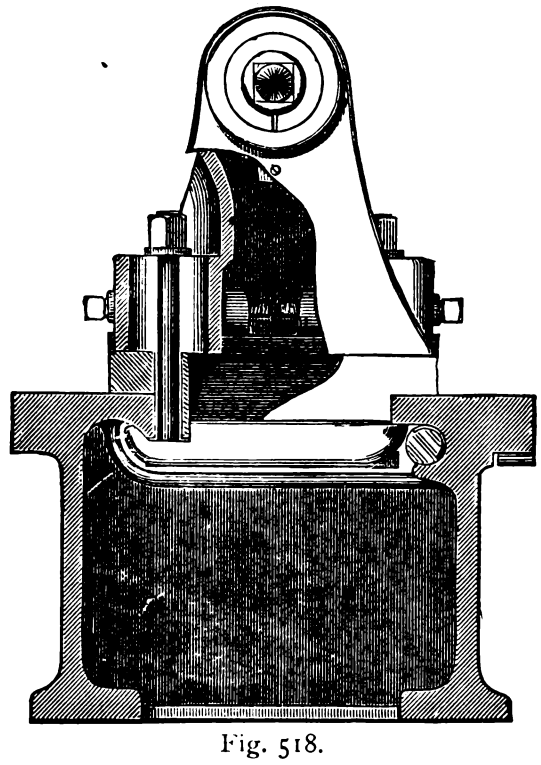

Fig. 518.

tailstock is quite free to be moved to its required position in the length of the bed. As a result of this form of design there is no wear between the clamp and the underneath V, and the tailstock need not fit tightly between the edges of the bed, hence wear between these surfaces is also avoided, while the tailstock is firmly clamped against one edge of the bed as soon as the clamp is tightened up by the bolt on that side.

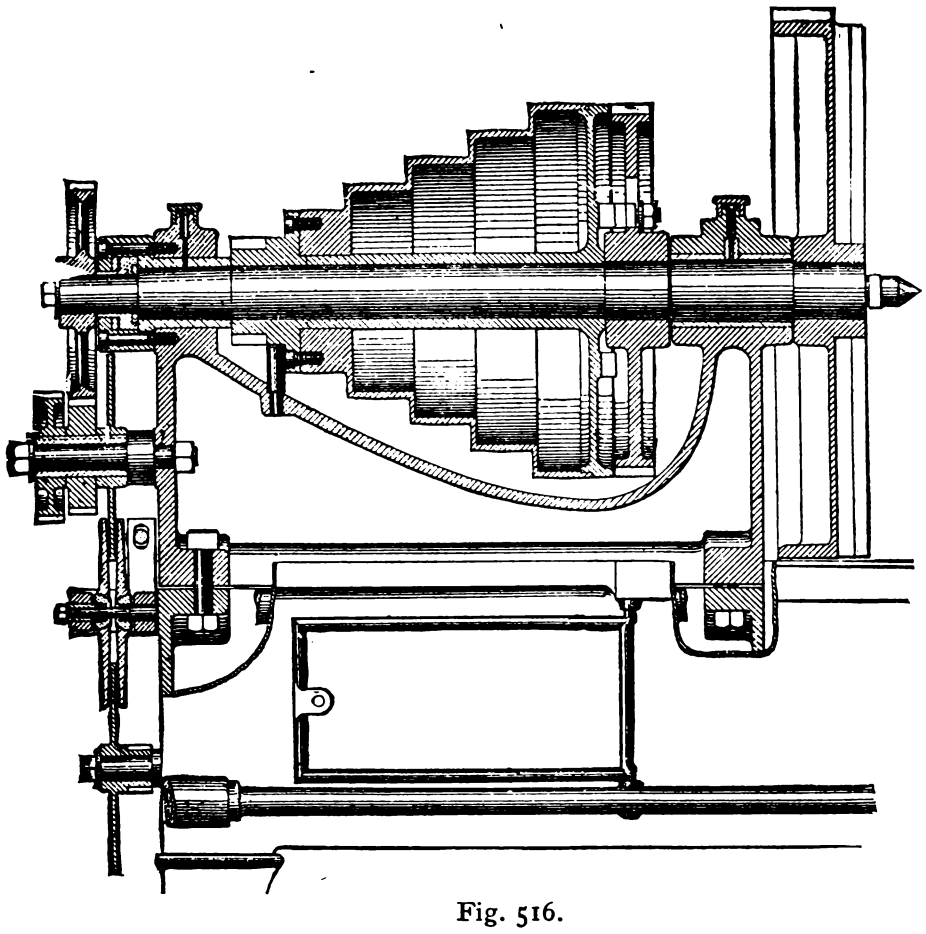

Fig. 516.

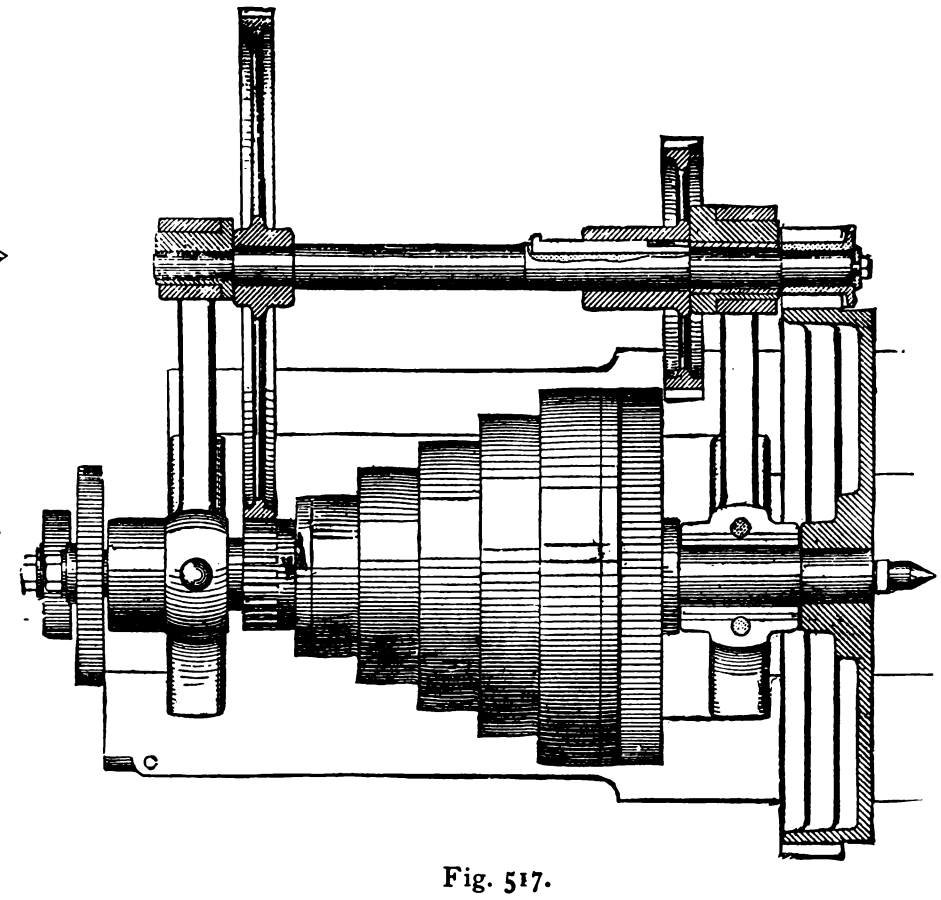

Fig. 517.

Fig. 520 shows the method of locking the tailstock spindle and of preventing its lateral motion in the bearing in the tailstock. At the front or dead centre end of this bearing there is between the spindle a sleeve enveloping the spindle, and coned at its outer end, fitting into a corresponding cone in the bore of the tailstock. Its bore is a fit to the dead spindle, and it is split through on the lower side. Its inner end is threaded to a sleeve that is within the headstock, and whose end is coned to fit a corresponding cone at the inner end of the bore of the tailstock.

To this second sleeve the line shown standing vertically on the left of the hand wheel is attached, so that operating this handle revolves the second sleeve and the two sleeves screw together, their coned ends abutting in their correspondingly coned seats in the tailstock bore, and thus causing the first-mentioned and split sleeve to close upon the dead centre spindle and yet be locked to the tailstock.

As the bore of the tailstock is exactly in line with the live

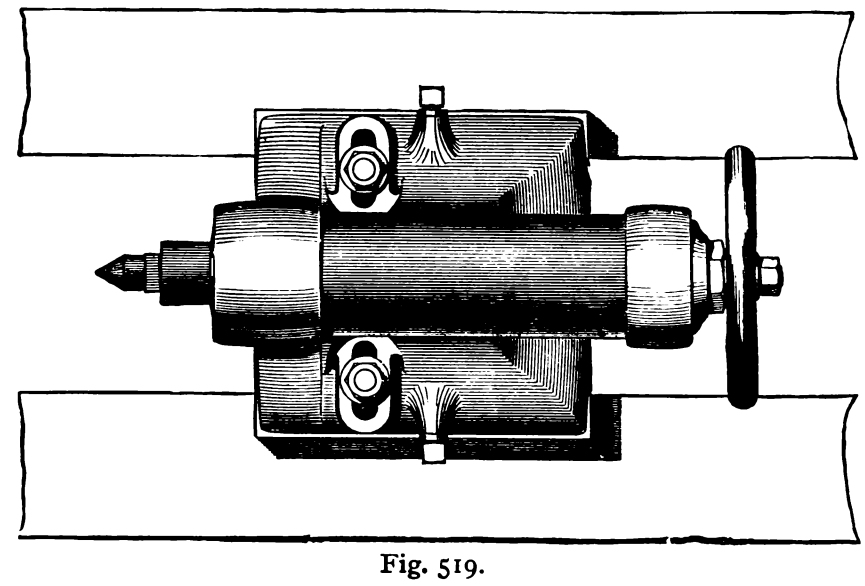

Fig. 519.

spindle, it follows that the dead spindle will be locked also in line with it.

Figs. 521 and 522 represent sectional views of the carriage and slide rest of these lathes of a size over 16 inches swing. On the feed rod there are two bevel pinions P, one on each side of the bevel-wheel A, and by a clutch movement either of these wheels may be placed in gear with bevel-wheel A.

The clutch motion is operated by a lever which, when swung over to the right, causes the bevel pinion on the right to engage

with the bevel-wheel A, and the carriage feeds to the right, while with the lever swung over to the left the carriage feeds to the left.

On the inclined shaft is a worm, or, as the makers term it, a spiral pinion of several teeth which gears into a straight toothed spur gear-wheel, giving a smooth and rolling tooth contact, and therefore producing an even and uniform feed motion.

This spur gear is fast on a shaft C, which is capable of end motion and is provided on each of its side faces with an annular toothed clutch. On each side of this spur-wheel is a clutch, one of which connects with the train of gears for the turning feed, and the other with the cross-feed gear B.

When the shaft (whose end is shown at C, and to which the spur gear referred to is fast) is pulled endways outwards from the lathe bed, its front annular clutch engages with the clutch that sets the cross-feed gear B in motion, and B engages with a pinion which forms the nut of the cross-feed screw.

When shaft C is moved endways inwards its other annular clutch engages the clutch on that side of it, and the turning feed is put into operation. The method of operating shaft C endways is as follows :—

In a horizontal bearing D is a shaft at whose end is a weighted lever L, and on the end of this shaft is a crank pin shown engaging a sleeve E which affords journal bearing to the outer end of shaft C, so that operating the weighted lever L operates E, and therefore shaft C with the spur gear receiving motion from the worm. A simple catch confines lever L to either of its required limits of motion, and allows the free motion of the operating lever to start or stop either the longitudinal or the cross feed, either of which is started or stopped by this lever, but no mistake can occur as to which feed is operated, because the catch above mentioned requires to be shifted to permit the feed to be operated.

The lower end of the bell crank F engages with the sleeve E, so that when the shaft C is operated outwards the horizontal arm of bell crank F is depressed and the spur pinion of the cross-feed nut is free to revolve, being driven by the cross-feed motion. When the lever F is moved towards the lathe bed (which occurs when the stop or catch is set to allow the longitudinal feed to be used) the nut of the cross feed is locked fast by the horizontal arm of the bell crank F. This device makes the whole action from one direction of feed to another automatic, and the attention of the workman is not needed for any complicated adjustment of parts preparatory to a change from one feed to the other.

At H is a hand wheel for hand feeding, the pinion R meshing into the rack that extends along the front of the lathe bed; back of the hand wheel and at H' a clamp is provided whereby the saddle or carriage may be locked to the lathe bed when the cross feed is being used, thus obviating the use of a separate clamp on the bed.

The top slide of the compound rest is long and its guideway is short, the nut being in the stationary piece G, and it will be observed that by this arrangement at no time does the bearing surfaces of the slides become exposed to the action of chips or dirt.

Fig. 523 is a sectional view of the carriage and slide rest as arranged for 12 and 16-inch lathes when not provided with a self-acting cross feed. In this case end motion to shaft C is given by lever H, which is held in its adjusted position by the tongue T. In this lathe the screw-cutting and the turning feed cannot be put into gear at the same time.

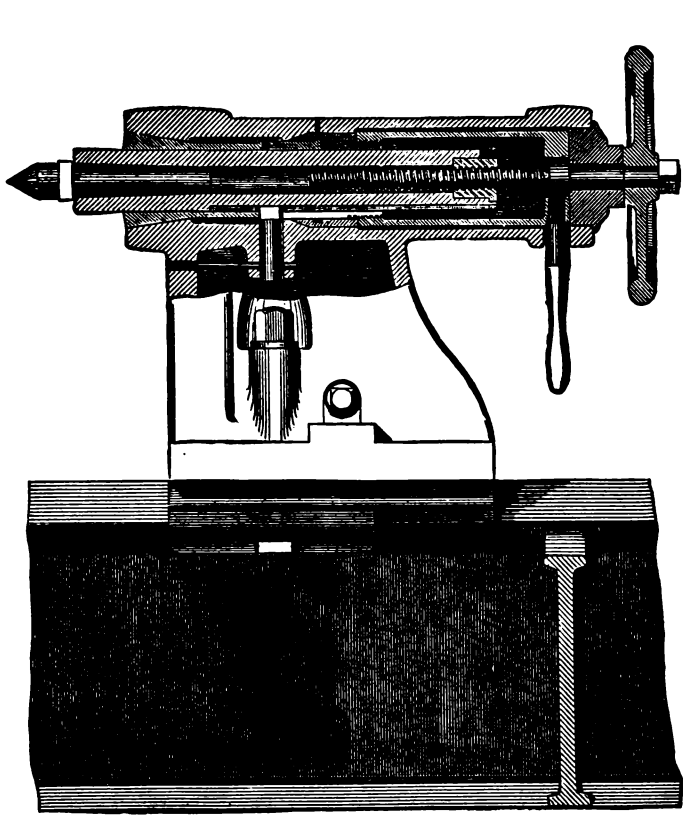

Fig. 520.

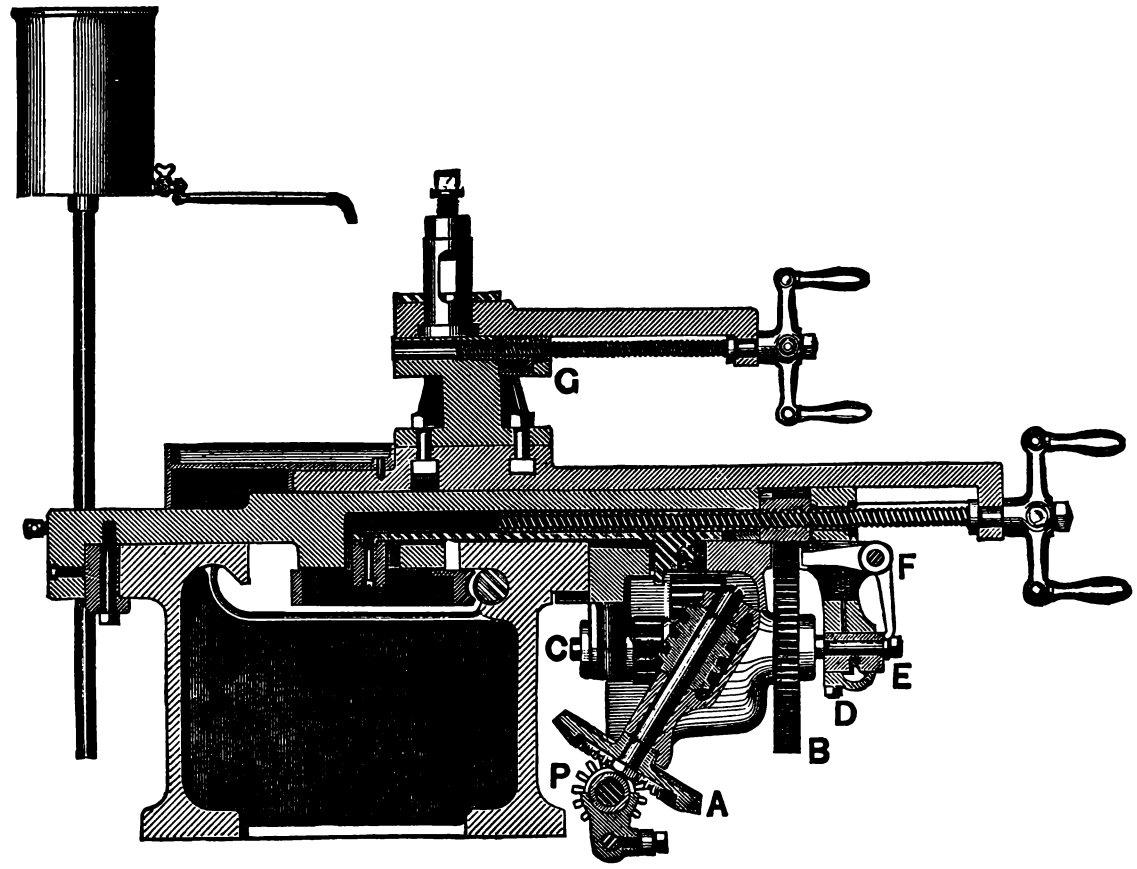

Fig. 521.

The tool nut is arranged to enable the tool to be adjusted for height after it is fastened in the tool post by pivoting it to the cross slide, a spring S forcing it upwards at its outer end, thus holding the tool point down and in the direction in which the pressure of the cut forces it, thus preventing the wear of the pivot

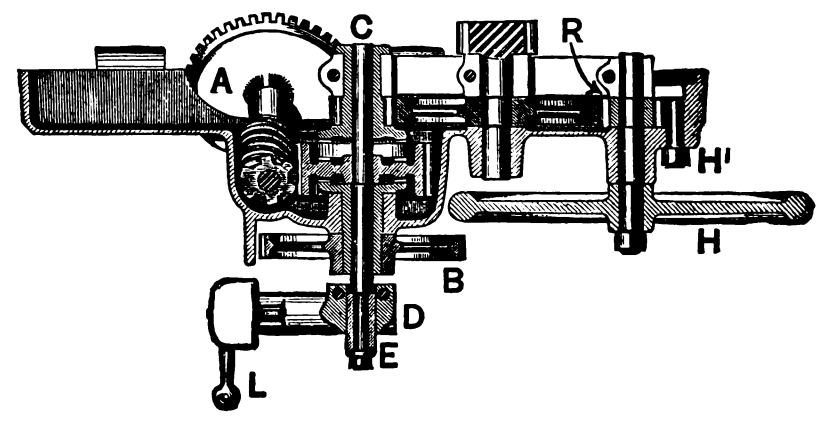

Fig. 522.

from letting the tool move when it first meets the cut. The nut N is operated to adjust the tool height, and at the same time enables the depth of cut to be adjusted very minutely. A trough catches the water, cuttings, &c., and thus protects the slides and slideways from undue wear.

In all these lathes the feeding mechanism is so arranged that there are no overhanging or suspended shaft pins or spindles, each of such parts having a bearing at each end and not depending on the face surface of a collar or pin, as is common in many

lathes. Furthermore, in these lathes the handle for the hand carriage feed moves to the right when the carriage moves to the right; the cross-feed screw (and the upper screw also in compound slide rests) has a left-hand thread, so that the nut being fixed the slides move in the same direction as though the nut moved as in ordinary lathes. The tailstock or poppet-head screw is a right hand because the nut moves in this case. The object of employing right-hand screws in some cases, and left-hand ones in others, is that it comes most natural in operating a screw to move it from right to left to unscrew, and from left to right to screw up a piece, this being the action of a right-hand screw, left-hand screws being comparatively rarely used in mechanism, save when to attain the object above referred to.

Fig. 524 represents the Niles Tool Works car axle lathe, forming an example in which the work is driven from the middle of its length, leaving both ends free to be operated upon simultaneously by separate slide rests.

The work being driven from its centre enables it to rotate upon two dead centres, possessing the advantage that both being locked fast there is no liberty for the work to move, as is the case when an ordinary lathe having one live or running spindle is used, because in that case the live spindle must be held less firmly and rigidly than a dead centre, so as to avoid undue wear in the live spindle bearings; furthermore, the liability of the workman to neglect to properly adjust the bearings to take up the wear is avoided in the case of two dead centres, and no error can occur because of either of the centres running out of true, as may be the case with a rotating centre.

The cone pulley and back gear are here placed at the head of the lathe driving a shaft which runs between the lathe shears and drives a pinion which gears with the gear on the work driving head shown to stand on the middle of the shears. This head is hollow so that the axle passes through it. On the face of this gear is a Clement's equalizing driver constructed upon the principle of that shown hereafter in Fig. 756.

The means for giving motion to the feed screw and for enabling a quick change from the coarse roughing feed to a finer finishing feed to the cutting tool without requiring to change the gears or alter their positions, is shown in Fig. 525. *a* and *b* are two separate pinions bored a working fit to the end of the driving shaft S, but pierced in the bore with a recess and having four notches or featherways *h*. The end of the driving shaft S is pierced or bored to receive the handled pin *i*, and contains four slots to receive the four feathers *j* which are fast in *i*. In the position shown in the figure these feathers engage with neither *a* nor *b*, hence the driving shaft would remain motionless, but it is obvious that if pin *i* be pushed in the feathers would engage *b* and therefore drive it; or if *i* were pulled outwards the feathers would engage *a* and drive it, because *a* and *b* are separate pinions with a space or annular recess between them sufficient in dimensions to receive the feathers. The difference in the rate of feed is obviously obtained through the difference in diameters of the pair of wheels *a*, *c* and the pair *d*, *b*, the lathe giving to the lead screw the slowest motion and, therefore, the finest feed.

The means for throwing the carriage in and out of feed gear with the feed screw and of providing a hand feed for operating the tool in corners or for quickly traversing the carriage, is shown in Fig. 526, in which S represents the feed screw and B a bracket

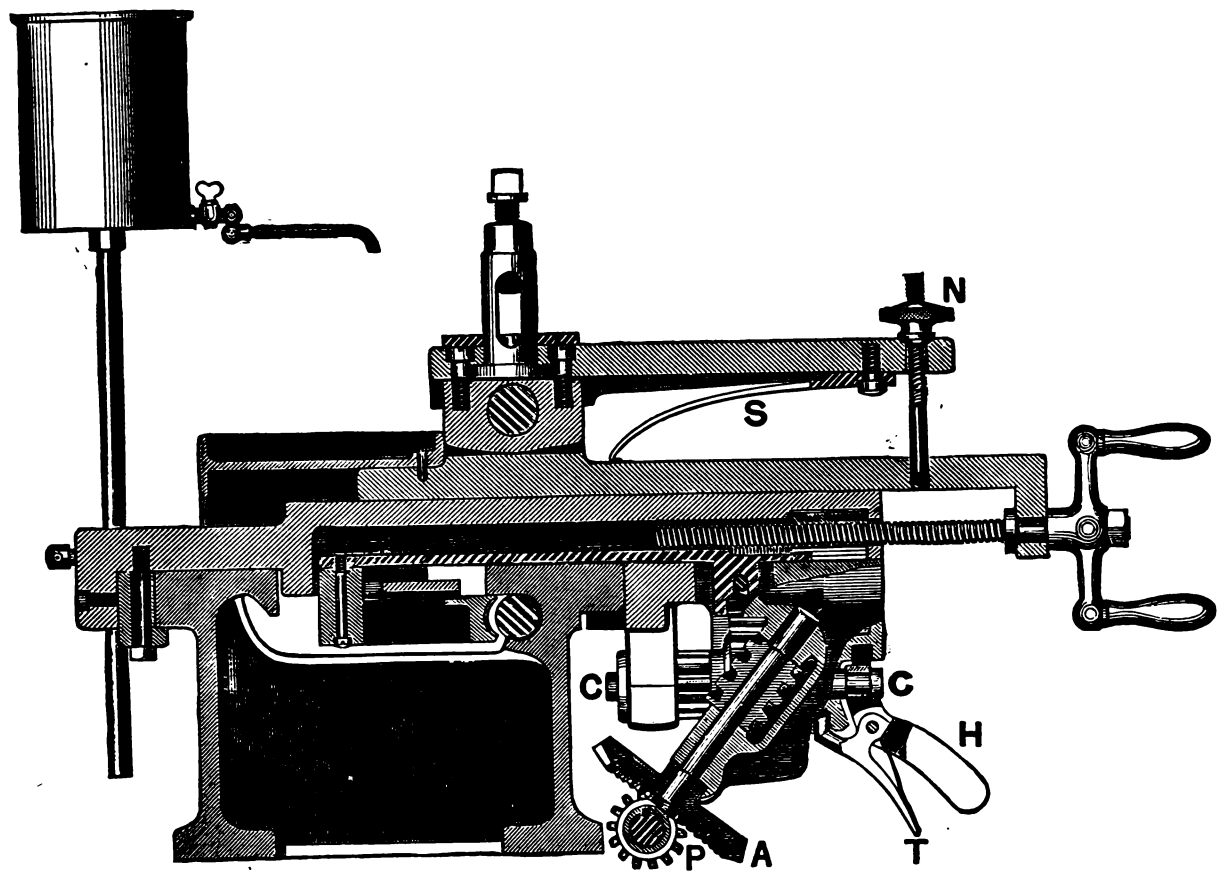

Fig. 523.

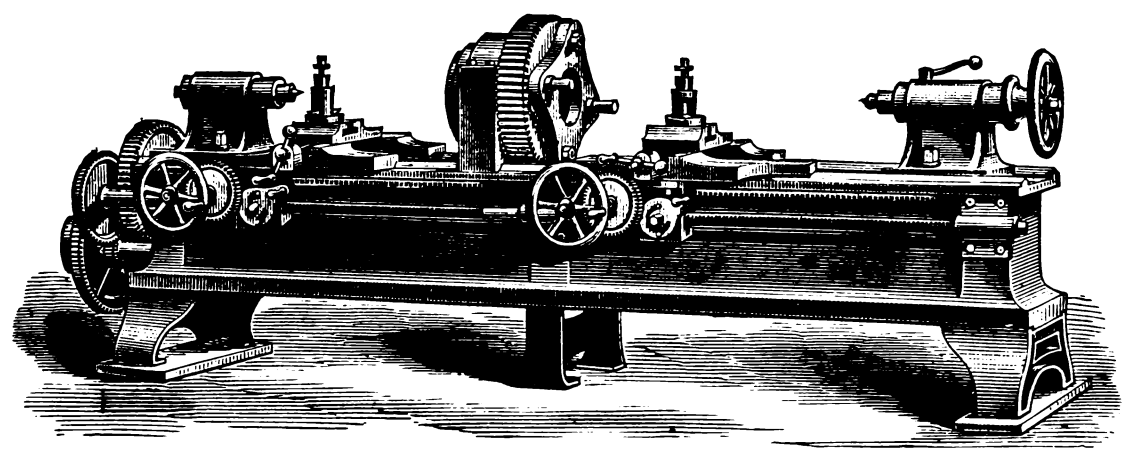

Fig. 524.

or casting bolted to the carriage and carrying the hand wheel and feed mechanism shown in the general cut figure.

B provides a slide way denoted by the dotted lines at *b*, for the two halves N and N′ of the feed nut. It also carries a pivot pin shown at *p* in the front elevation, which screws into B as denoted

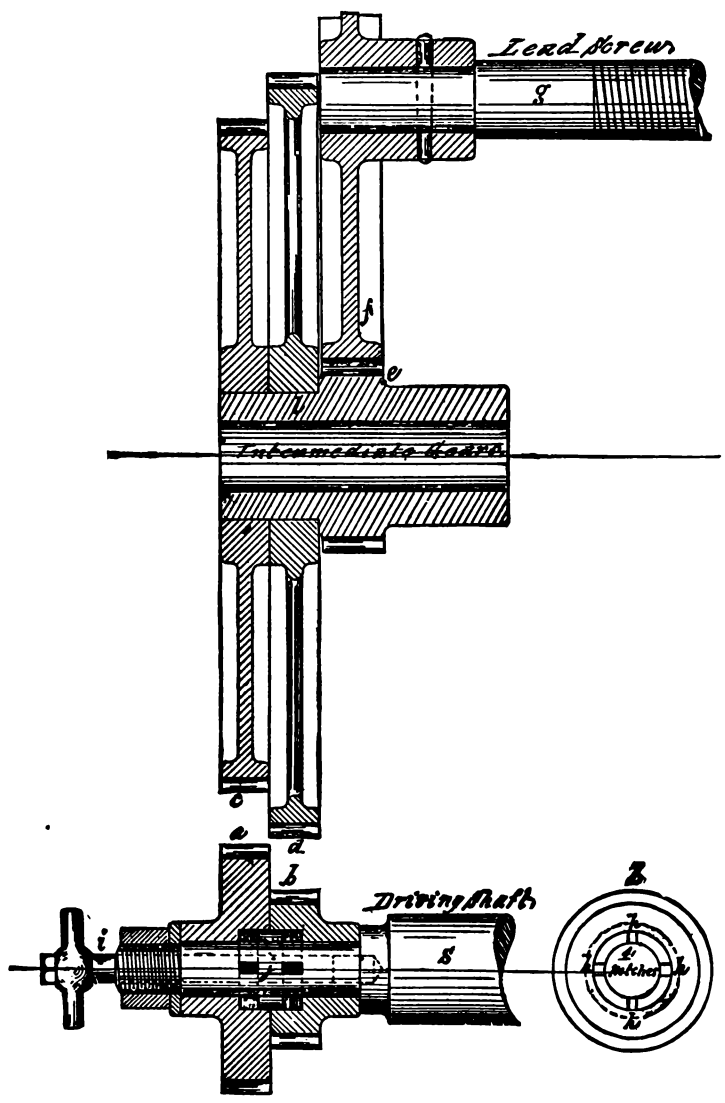

Fig. 525.

by *p′* in the end view ; upon this pivot operates the piece D, having the handle *d*. In D are two cam grooves *a a ;* two pins *n*, which are fast in the two half-nuts N N′, pass through slots *c c* in B, and into the cam grooves *a a* respectively.

As shown in the cut the handle *d* of D is at its lowest point, and the half-nuts N′ and N are in gear upon the feed screw ; but suppose *d* be raised, then the grooves *a a* would force their respective pins *n* up the slots *c*, and these pins *n* being each fast to a half of the nut, the two half-nuts would be opened clear of the feed screw, and the carriage would cease to be fed.

The hand-feed or guide-carriage traverse motion is accomplished as follows :—B provides at *e* journal bearing to a stud on which is the hand wheel shown in the general cut ; attached to this hand wheel is a pinion operating a large gear (also seen in general cut) whose pitch line is seen at *g*, in figure. The stud carrying *g* has journal bearing at *f*, and carries a pinion whose pitch circle is at *h* and which gears with the rack.

Fig. 527, which is taken from *The American Machinist*, represents an English self-acting lathe capable of swinging work of 12 inches diameter over the top of the lathe shears, which are provided with a removable piece beneath the live centre, which when removed leaves a gap, increasing the capacity of the lathe swing. The gears for reversing the direction of feed screw motion are here placed at the end of the live head or headstock, the screw being used for feeding as well as for screw cutting.

Fig. 528 represents a pattern-maker's lathe, by the Putnam Tool Co., of Fitchburg, Massachusetts. This lathe is provided with convenient means of feeding the tool to its cut by mechanism instead of by hand, as is usually done by pattern-makers, and this improvement saves considerable time, because the necessity of frequently testing the straightness of the work is avoided.

It is provided with an iron extension shears, the upper shears sliding in V-ways provided in the lower one. The hand-wheel is connected with a shaft and pinion, which works in a rack, and is used for the purpose of changing the position of the upper bed, which is secured in its adjusted position by means of the tie bolts and nuts, as shown on the front of the lower shears. This enables the gap in the lower shears to be left open to receive work of large diameter, and has the advantage that the gap need be opened no more than is necessary to receive the required length of work. The slide-rest is operated by a worm set at an angle, so as to operate with a rolling rather than a sliding motion of the teeth, and the handle for operating the worm-shaft is balanced. The carriage is gibbed to the bed. The largest and smallest steps of the cone pulley are of iron, the intermediate steps being of wood, and a brake is provided to enable the lathe to be stopped quickly. This is an excellent improvement, because much time is often lost in stopping the lathe while running at a high velocity, or when work of large diameter is being turned. The lathe will swing work of 50 inches within the gap, and the upper shears will move sufficiently to take in 4 additional feet between the centres.

In the general view of the lathe, Fig. 528, the slide-rest is shown provided with a T-rest for hand tools, but as this sets in a clip or split bore, it may readily be removed and replaced by a screw tool, poppet for holding a gauge, or other necessary tool. To enable the facing of work when the gap is used, the extra attachment shown in Figs. 529 and 530 is employed. It consists of an arm or bar A, bolted to the upper shears S by a bolt B, and clamp C, in the usual manner, and is provided with the usual slideway and feed-screw *f* for operating the lower slide T, which carries a hollow stem D ; over D fits a hub K, upon the upper slide E, which hub is split and has a bolt at F, by means of which the upper slide may

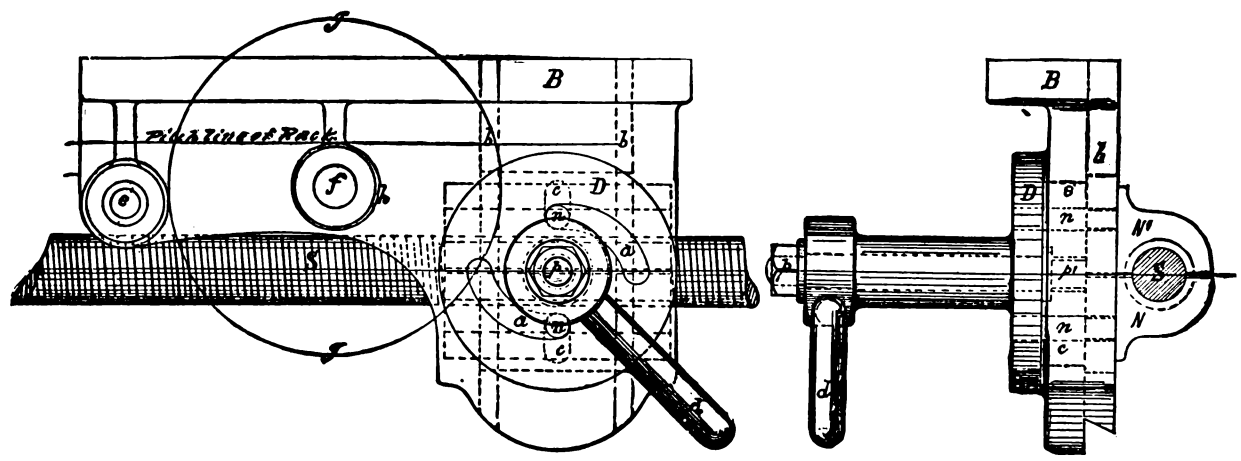

Fig. 526.

be clamped to its adjusted angle or position. The upper slider H receives the tool-post, which is parallel and fits in a split hub, so that when relieved it may be rapidly raised or lowered to adjust the height of the tool.

The construction of the brake for the cone pulley is shown in Figs. 531 and 532, in which P represents the pulley rim, L the brake lever, S a wooden shoe, and W a counter-weight. The lever is pivoted at G to a lug R, provided on the live headstock, and the brake obviously operates on the lowest part of the cone flange ; hence the lever handle is depressed to put the brake in action.

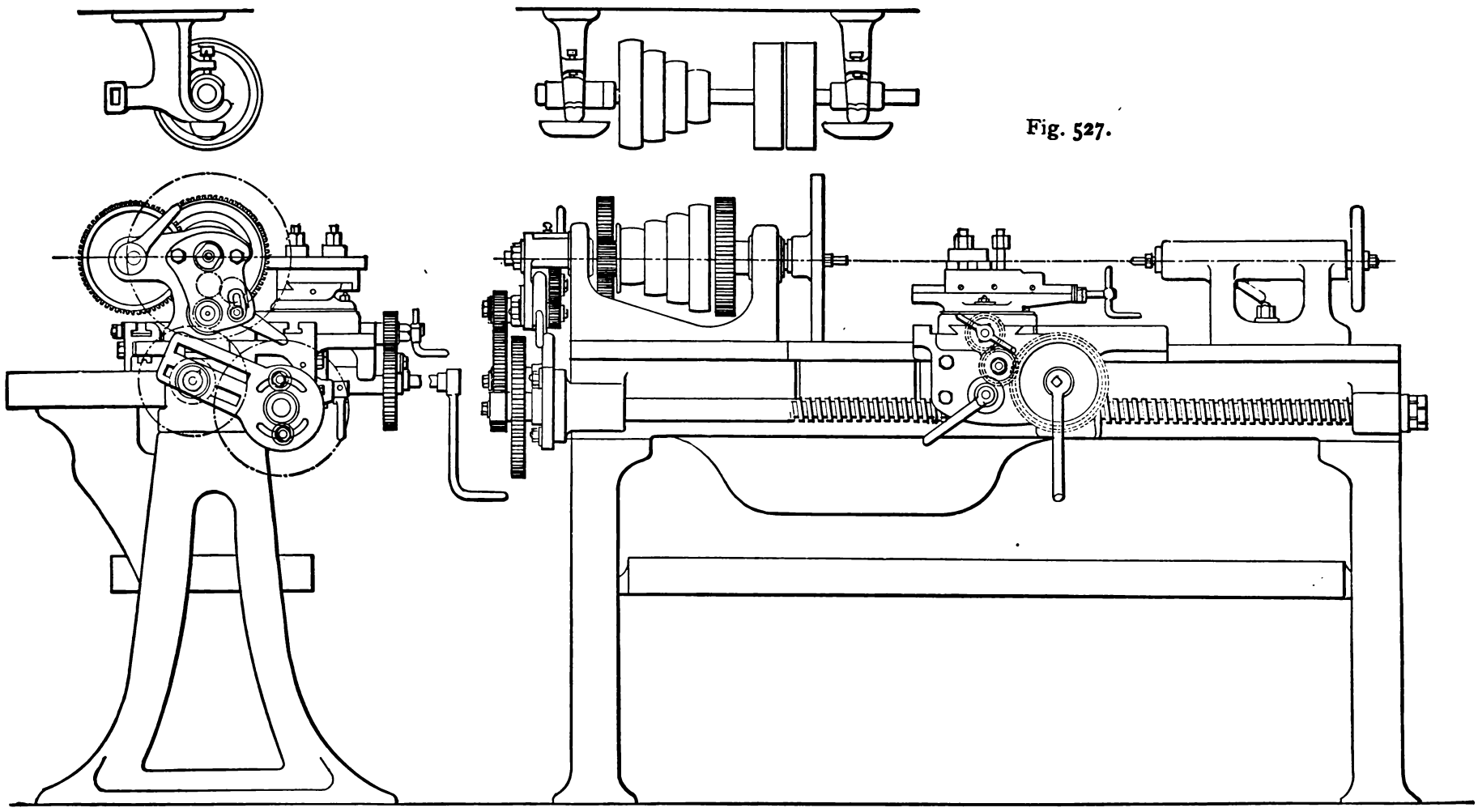

Fig. 527.

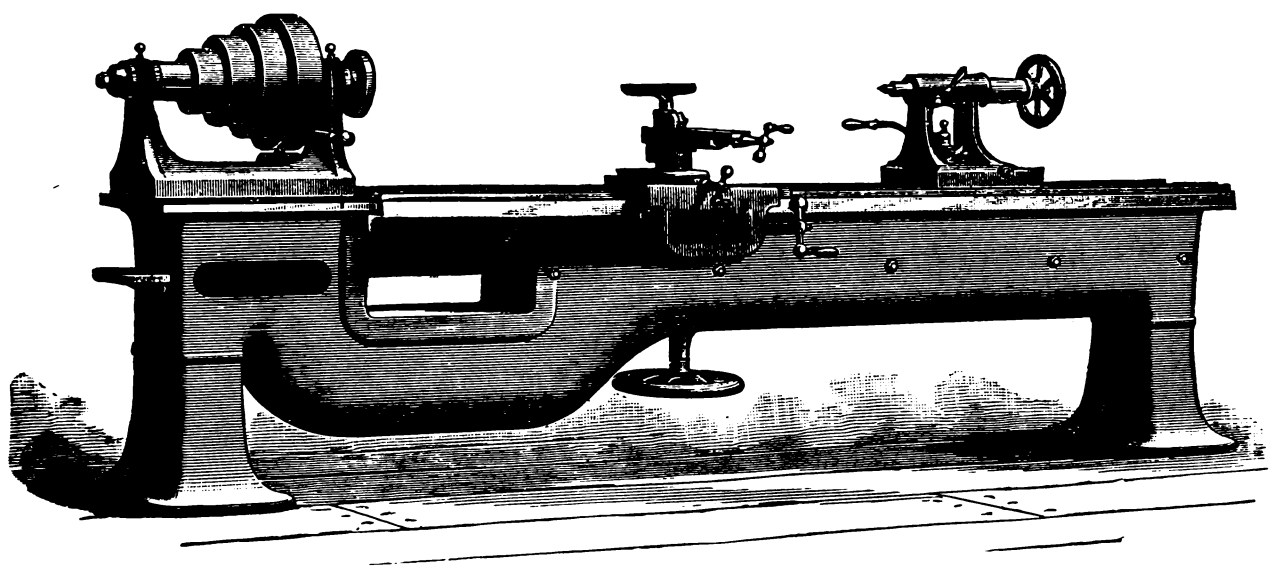

Fig. 528.

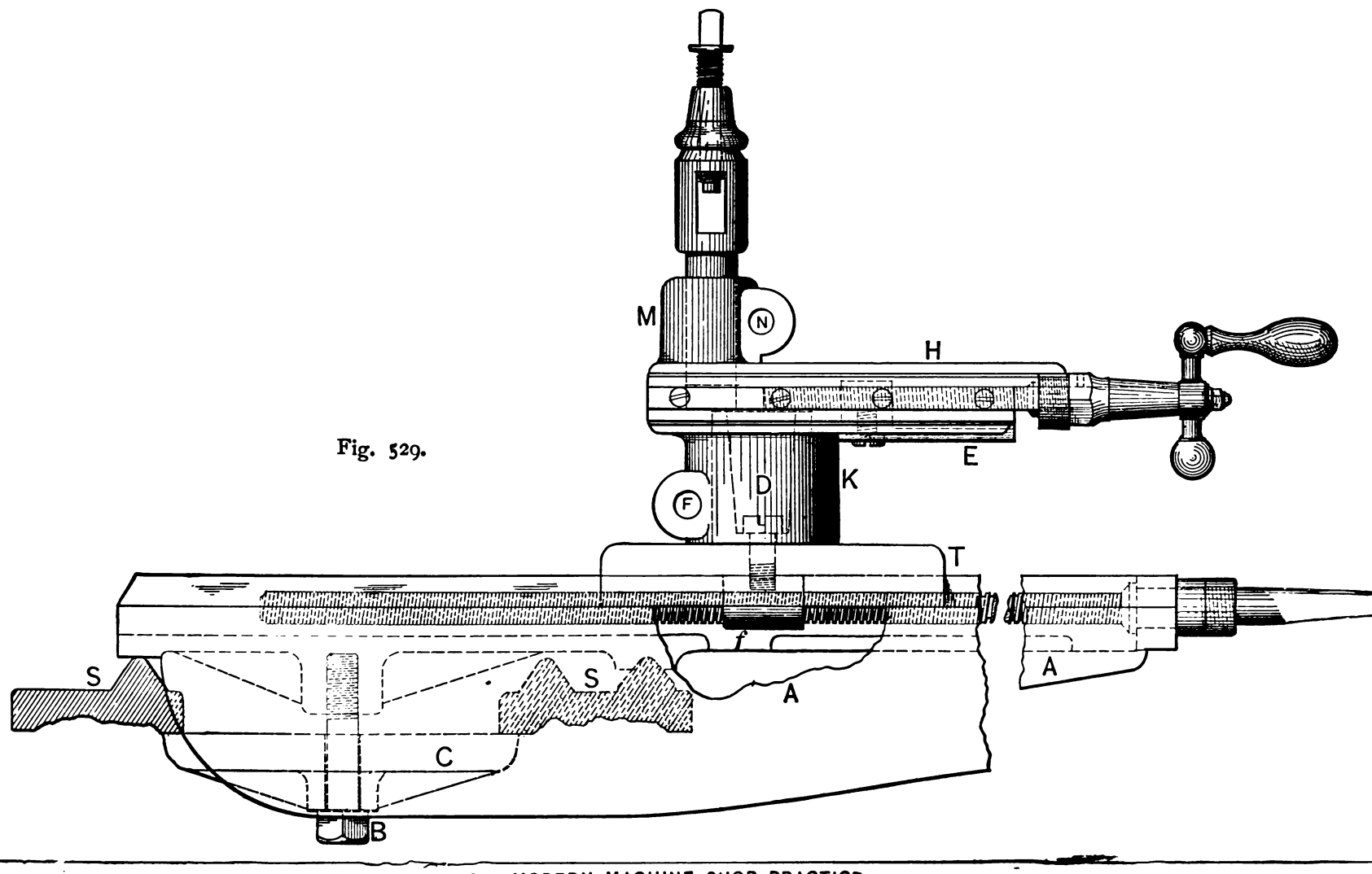

Fig. 529.

The construction of the front and back bearings for the live spindle is the same as that shown in Figs. 495 and 496.

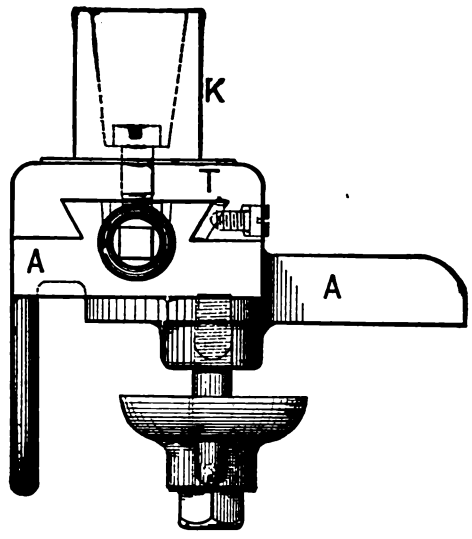

Fig. 530.

Wood turners sometimes have their lathes so made that the headstock can be turned end for end on the lathe shears, so that the face plate may project beyond the bed, enabling it to turn work of large diameter. A better method than this is to provide the projecting end of the lathe with a screw to receive the face plate as shown in Fig. 533, which represents a lathe constructed by Walker Brothers of Philadelphia. At the end of the lathe is shown a hand rest upon a frame that can be moved about the floor to accommodate the location, requiring to be turned upon the work.

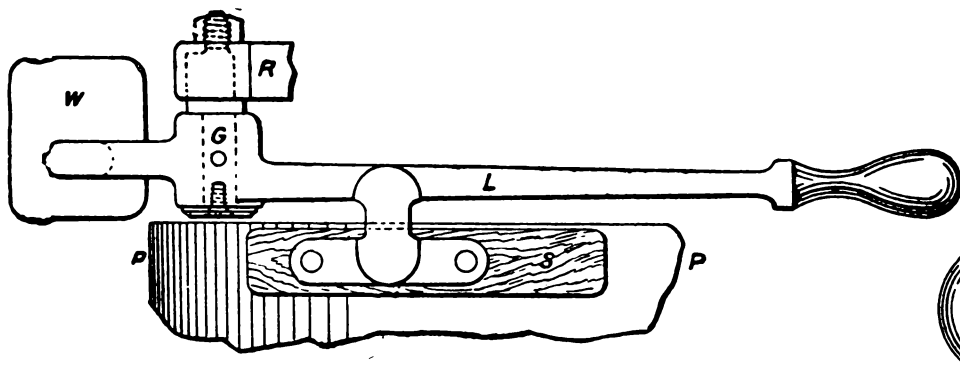

Fig. 531.

For very large work, wood-workers sometimes improvise a facing lathe, as shown in Fig. 534, in which A is a headstock bolted to the upright B; C is the cone pulley, and E a face plate built up of wood, and fastened to an iron face plate by bolts. The legs A, of the tripod hand rest, Fig. 535, are weighted by means of the weights B.

In Fig. 536 is shown a chucking lathe, especially adapted for boring and facing discs, wheels, &c. The live spindle is driven by a worm-wheel, provided around the circumference of the face plate. The driving worm (which runs in a cup of oil) is on a driving shaft, running across the lathe and standing parallel with the face of the face plate. This shaft is driven by a pulley as shown, changes of speed being effected by having a cone pulley on the counter-shaft and one on the line of shafting.

This lathe is provided with two compound slide rests. One of which may be used for boring, while the other is employed for facing purposes. These rests are adjustable for location across the bed of the lathe by means of bolts in slots, running entirely across the lathe bed.

These slide rests are given a self-acting motion by the following arrangement of parts: at the back of the live spindle is an eccentric rod, operating a connecting rod, which is attached at its lower end to the arm of a shaft running beneath the bed, and parallel to the lathe spindle. This shaft passes beyond the bed where it carries a bevel gear-wheel, which meshes with a bevel gear-wheel upon a cross shaft. This cross shaft carries three arms,

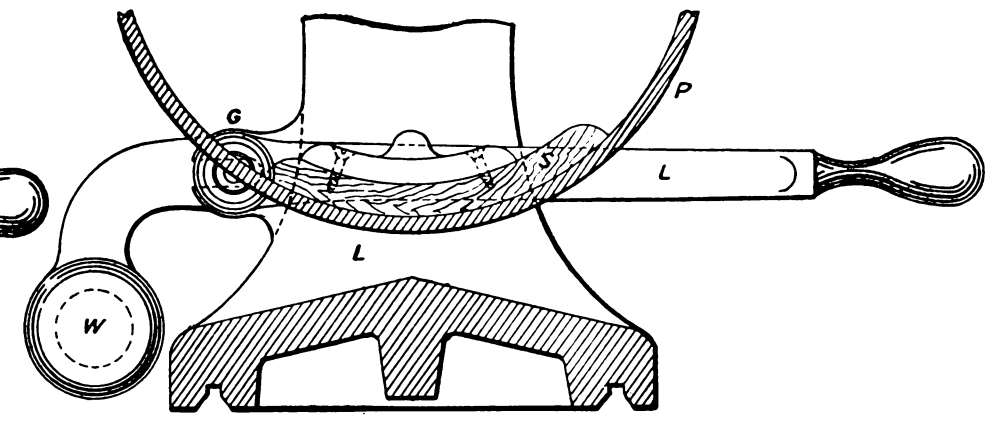

Fig. 532.

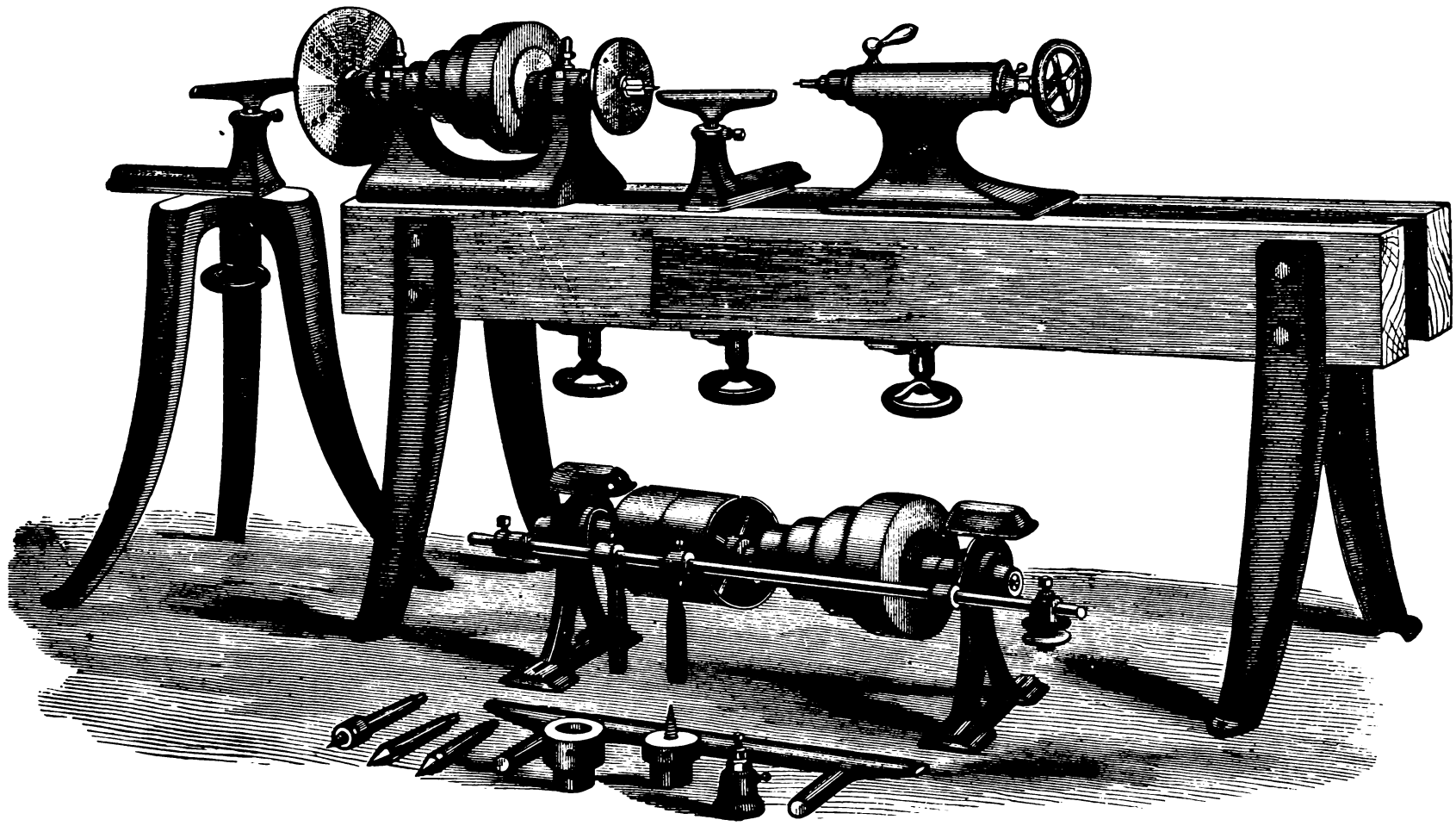

Fig. 533.

one at each end and inside its journal bearings in the bed, and one beneath and at a right angle to the other two. These receive oscillating motion by reason of the eccentric connecting rod, &c.

For each compound rest there are provided two handles as usual, and in addition an L lever, one arm of the latter being provided with a series of holes, while the other carries a weight.

The L lever carries a pawl which operates a ratchet wheel, placed on the handle end of the slide rest cross feed screw. If then a

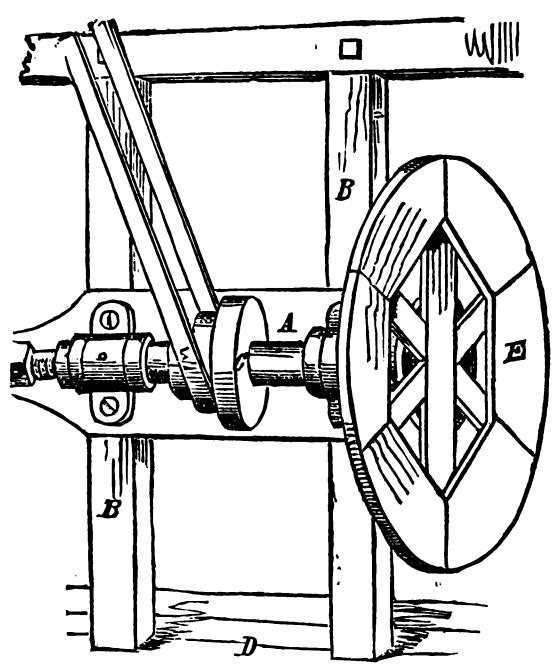

Fig. 534.

chain be attached to one of the holes of the L lever, and to the oscillating arm, the motion in one direction of the latter will be imparted to the L lever (when the chain is pulled). On the return motion of the oscillating arm, the chain hangs loose, and the weight on the L lever causes that lever arm to fall, taking up the slack of the chain, the feed taking place (when the pawl is made to engage with the ratchet wheel) during the motion of the oscillating arm from right to left, or while pulling the chain.

The rate of feed is varied by attaching the chain to different holes in the L lever.

To operate the rests in a line parallel to the lathe spindle, a similar L lever is attached by chain to the third oscillating arm, which is placed on the cross shaft, mid-way of the bed, or between the two slide rests. It is obvious then that with an L lever attachment on each feed screw, both slides of each rest may be simultaneously operated, while either one may be stopped either by detaching the chain or removing the L lever.

For operating the rests by hand, the usual feed-screw handles are used.

Fig. 537 represents a 90-inch swing lathe by the Ames Manufacturing Company of Chicopee, Massachusetts.

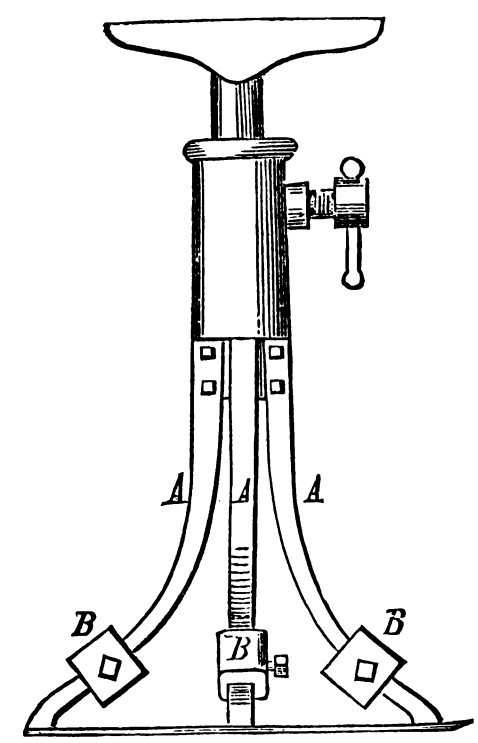

Fig. 535.

The distinguishing feature of this lathe is that the tailstock spindle is made square, to better enable it to bear the strain due to carrying cutting tools in place of the dead centre; and by means of a pulley instead of a simple hand wheel for operating the tail spindle, that spindle may be operated from an overhead countershaft, and a tool may be put in to cut key-ways in pulleys, wheels, &c., chucked on the face plate (which of course remains stationary during the operation), thus dispensing with the necessity of cutting out such key-ways by hammer, chisel, and file, in wheel bores too large and heavy to be operated upon in a slotting machine.

On account of the weight of the tailstock it is fitted with rollers, which may be operated to lift it from the bed when it is to be moved along the lathe bed.

Fig. 538 represents a 50-inch swing lathe by the New Haven

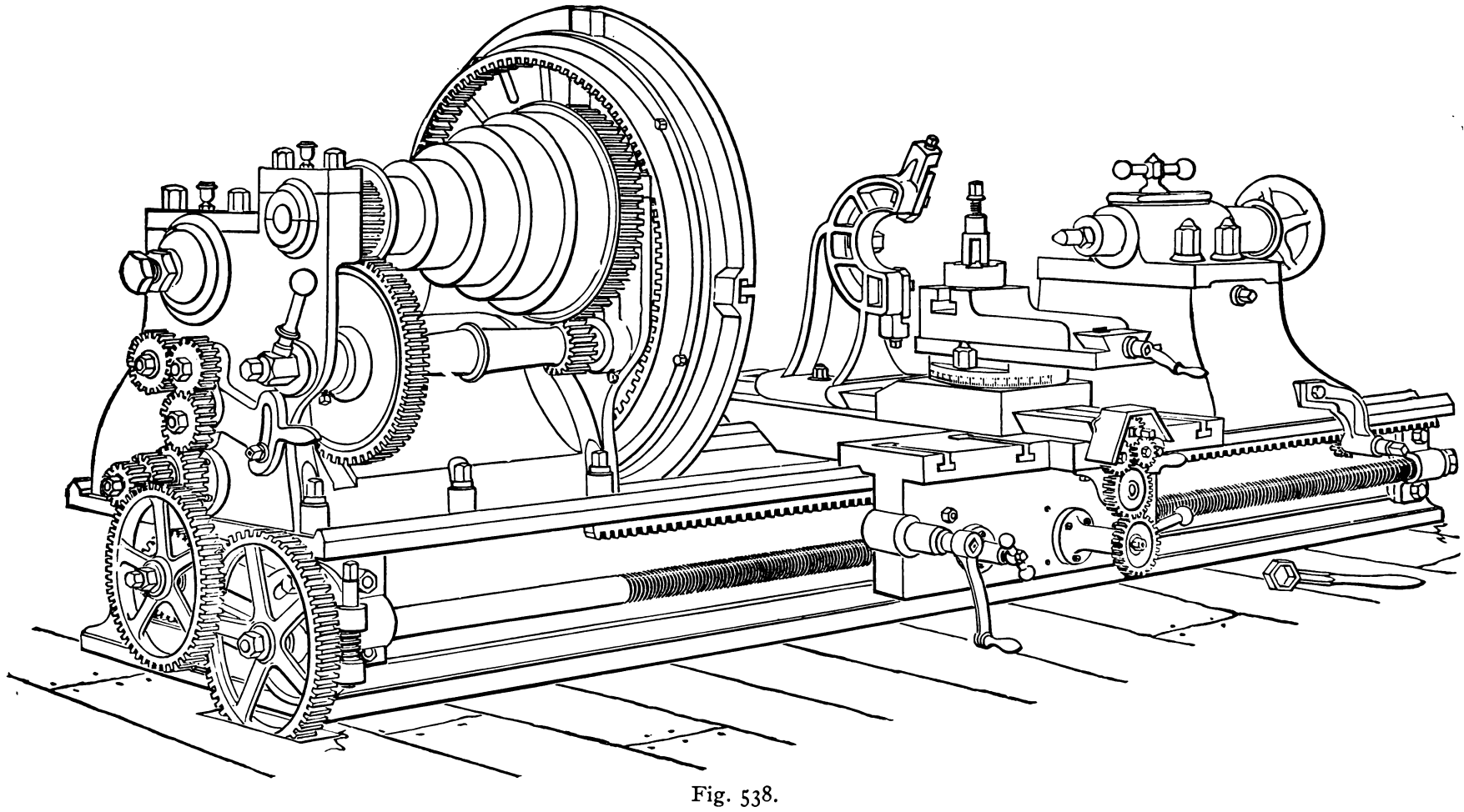

Fig. 538.

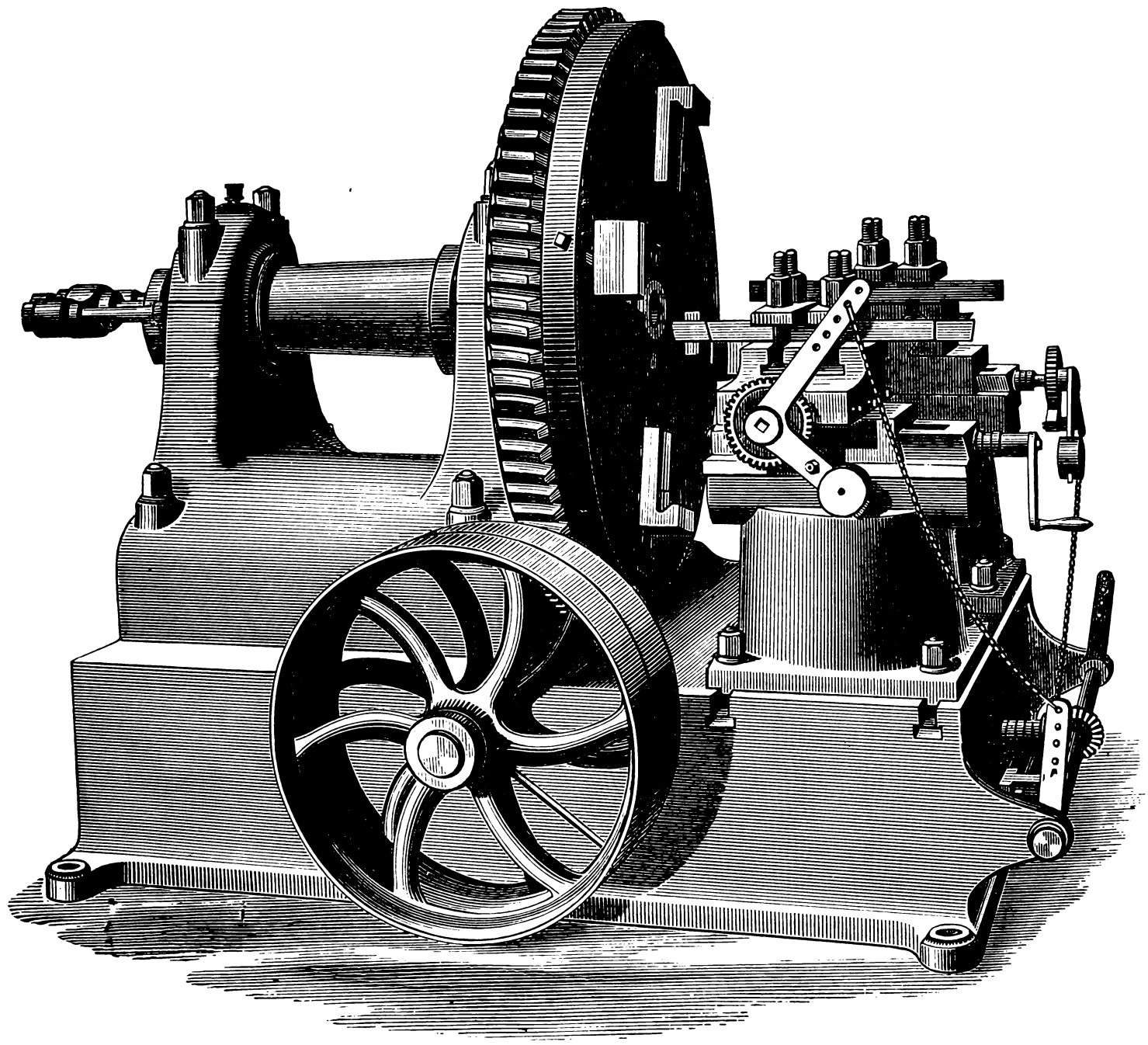

Fig. 536.

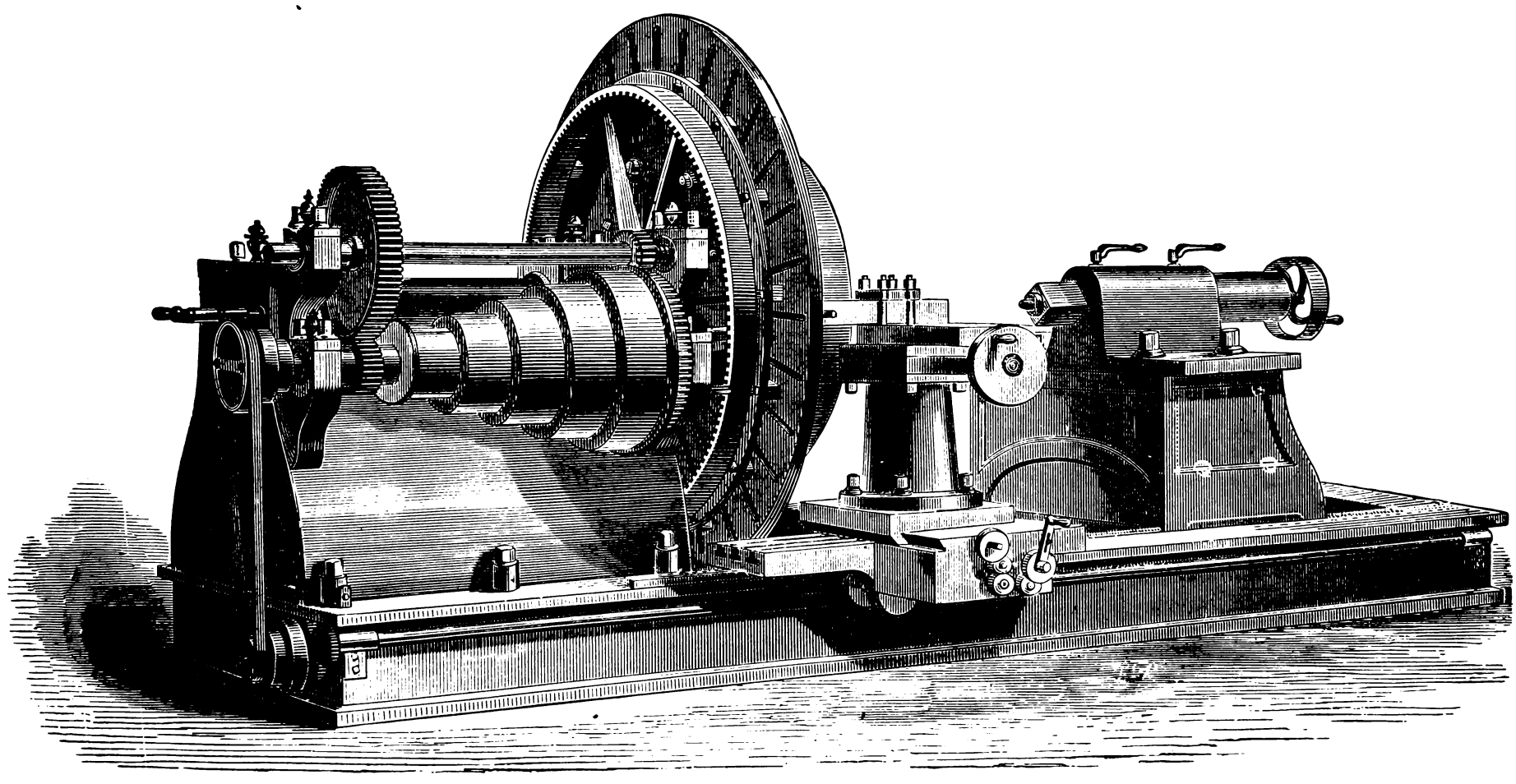

Fig. 537.

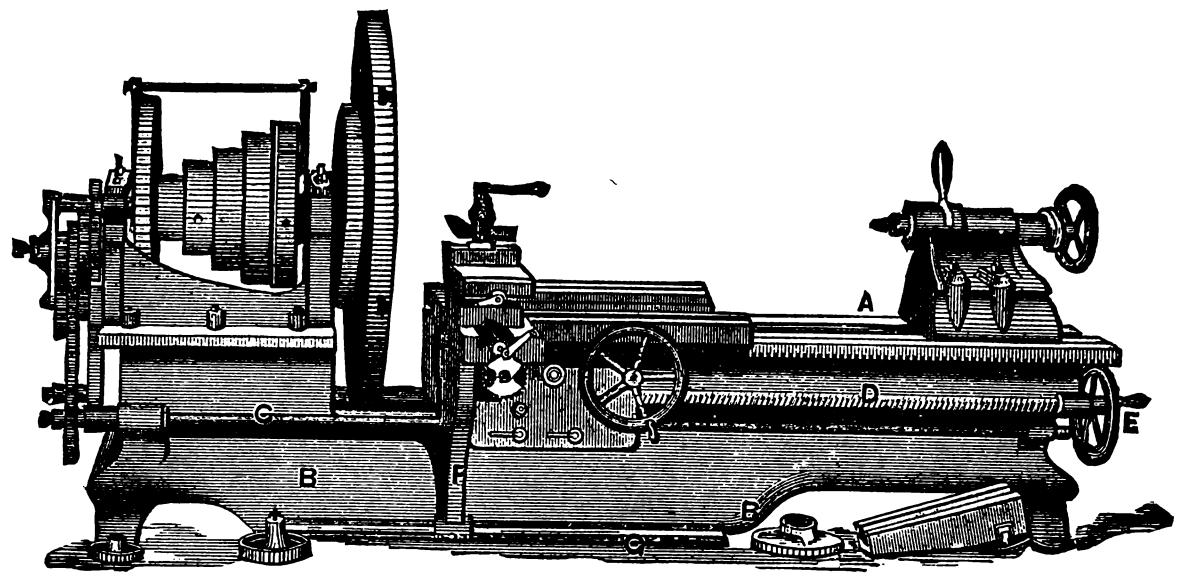

Fig. 540.

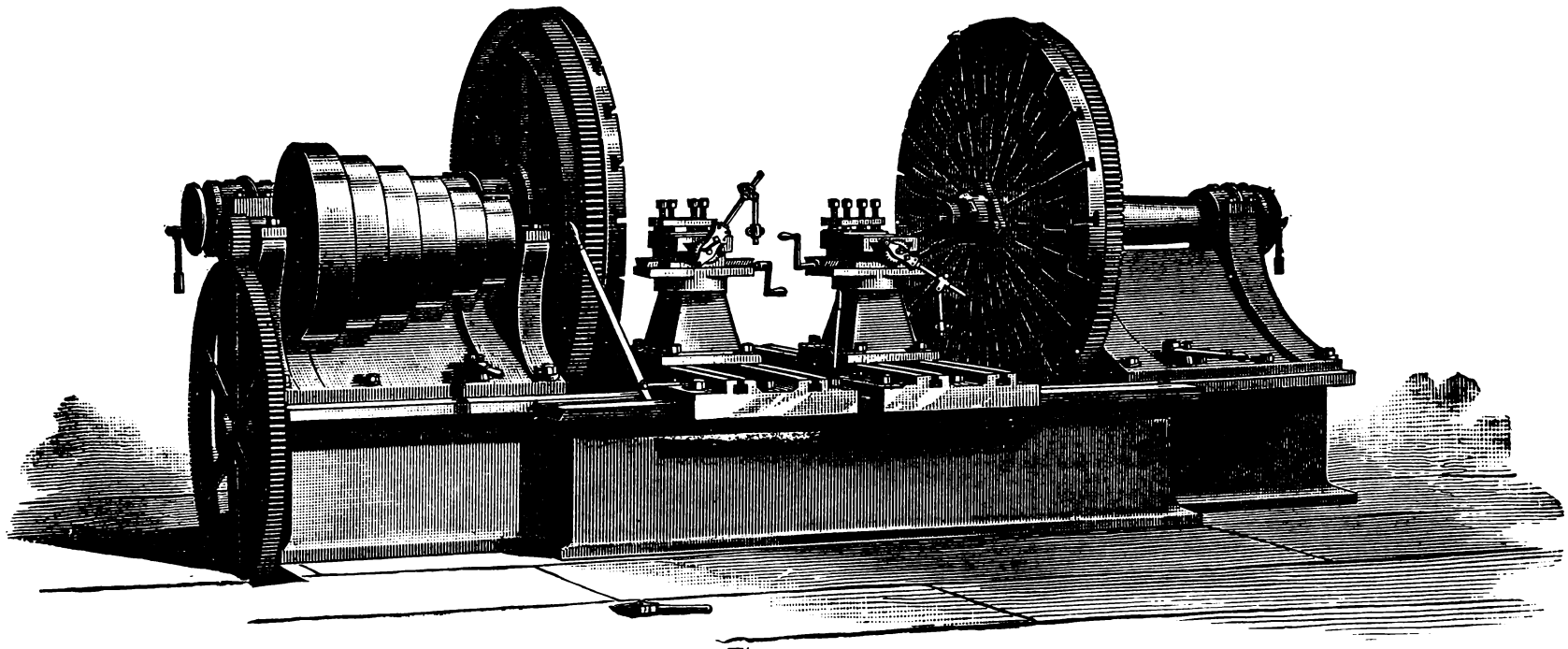

Fig. 541.

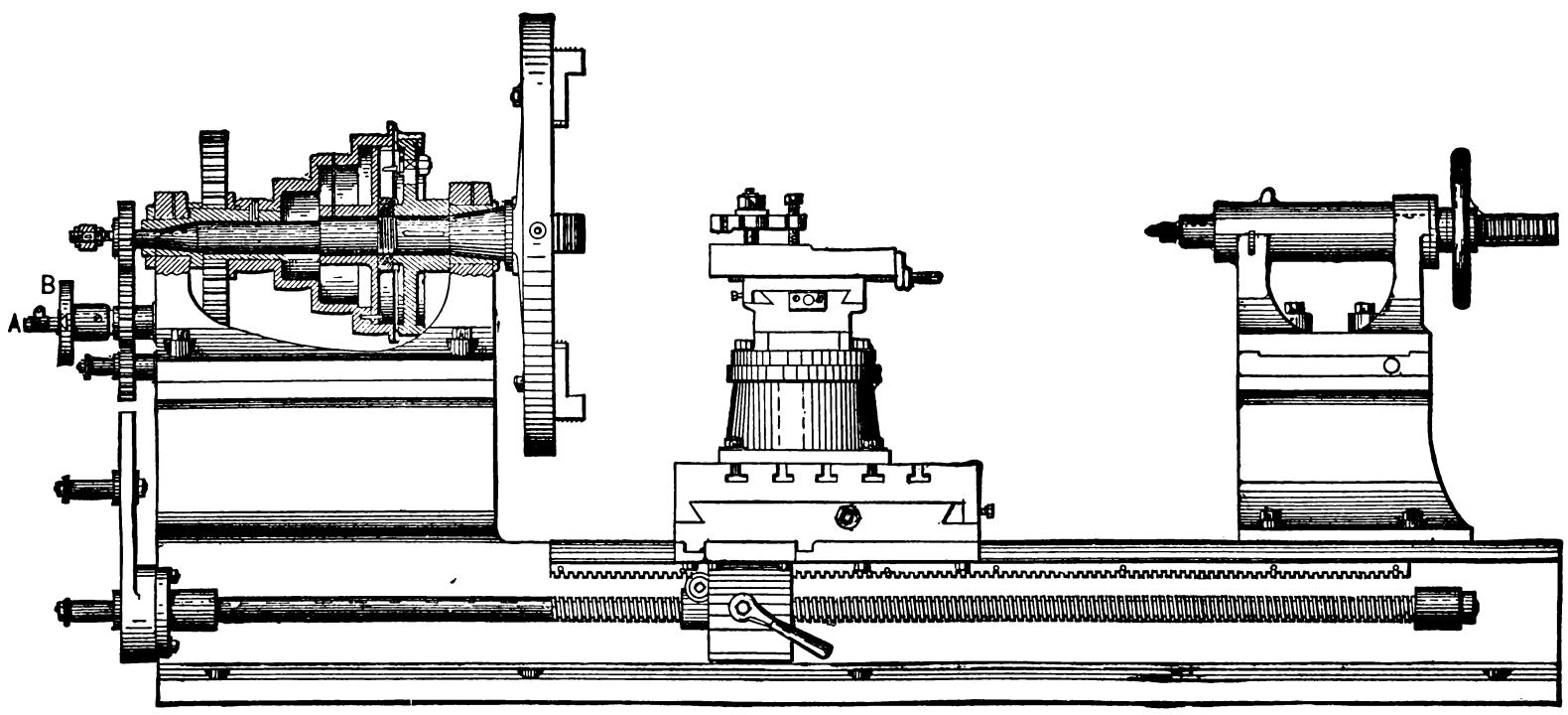

Fig. 542.

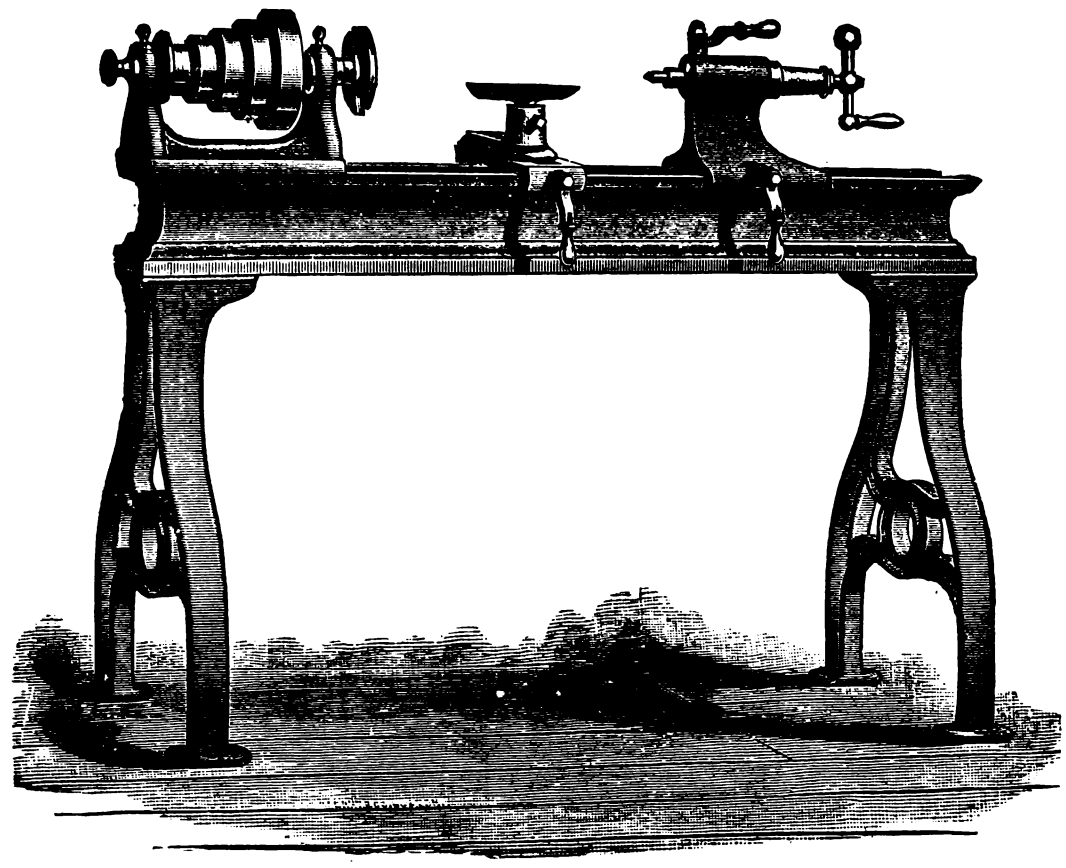

Fig. 543.

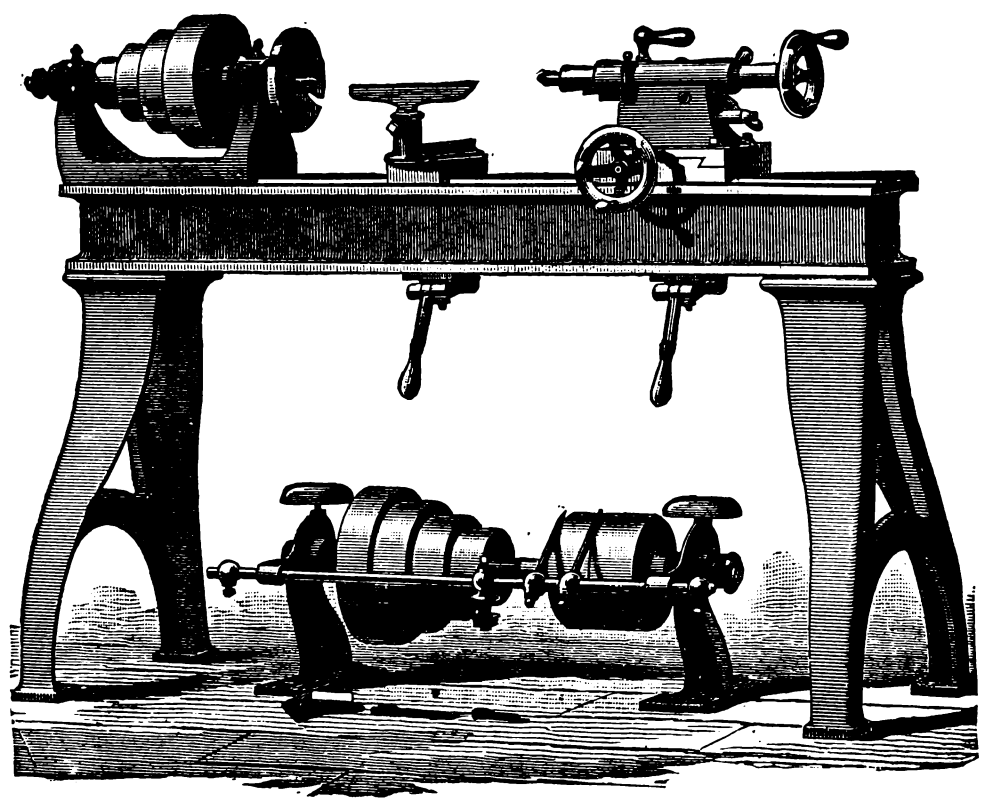

Fig. 544.

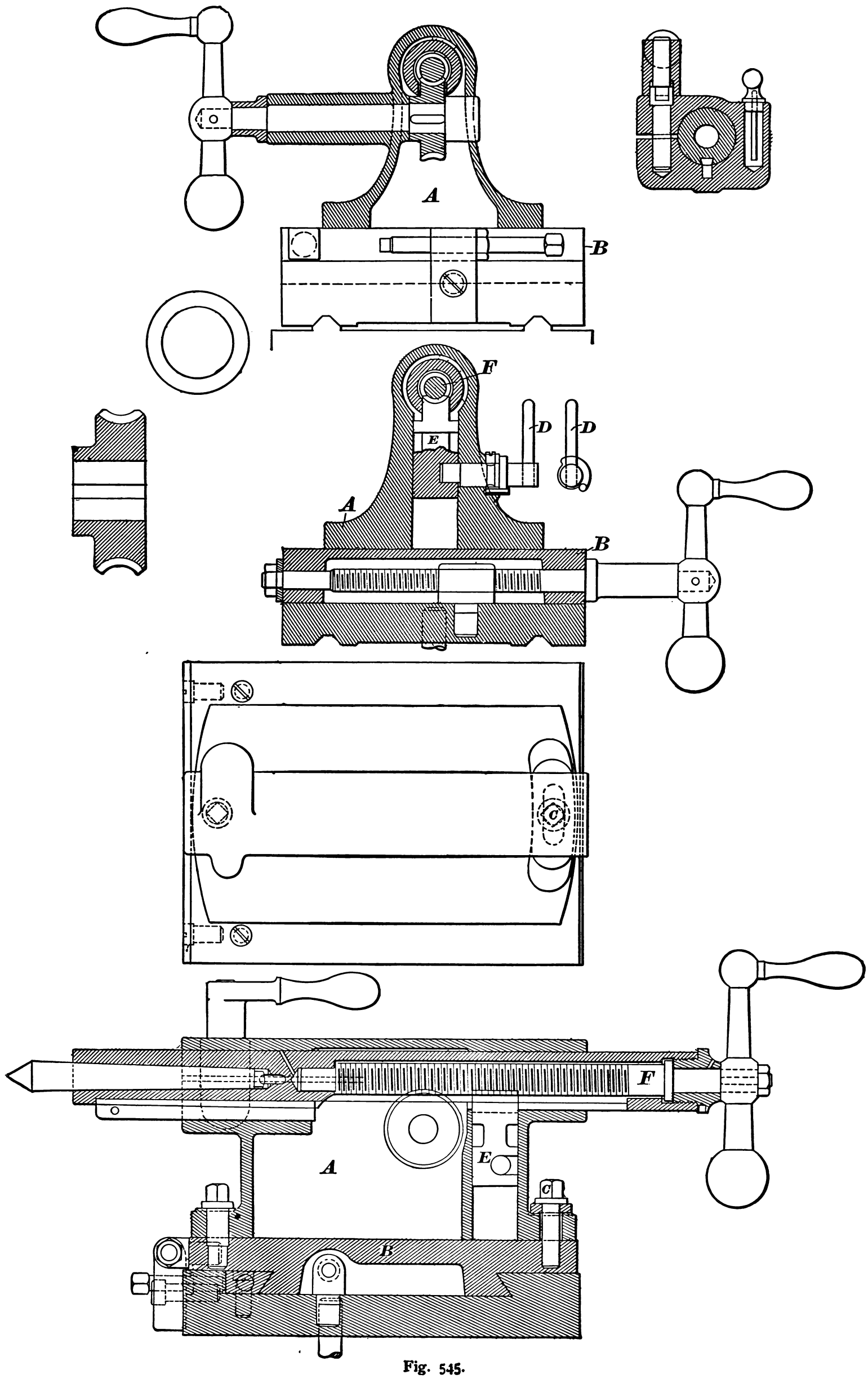

Fig. 545.

Manufacturing Company of New Haven, Connecticut. The compound rest is here provided with automatic feed so that it may be set at an angle to bore tapers with a uniform feed. The tailstock is provided with a bracket, carrying a pinion in gear with the hand-feed rack, so as to move the tailstock along the bed by means of the pinion. The feed screw is splined to give an independent feed, and the swing frame is operated by a worm as shown.

Gap Lathe or Break Lathe.

The gap lathe is one in which the bed is provided with a gap beneath the face plate, so as to enable that plate or the chucks to swing work of larger diameter, an example being given in Fig. 539.

It is obvious, however, that the existence of the gap deprives the slide rest of support on one side, when it is used close to the face plate. This is obviated in some forms of gap lathes by fitting into the gap a short piece of bed that may be taken out when the use of the gap is required.

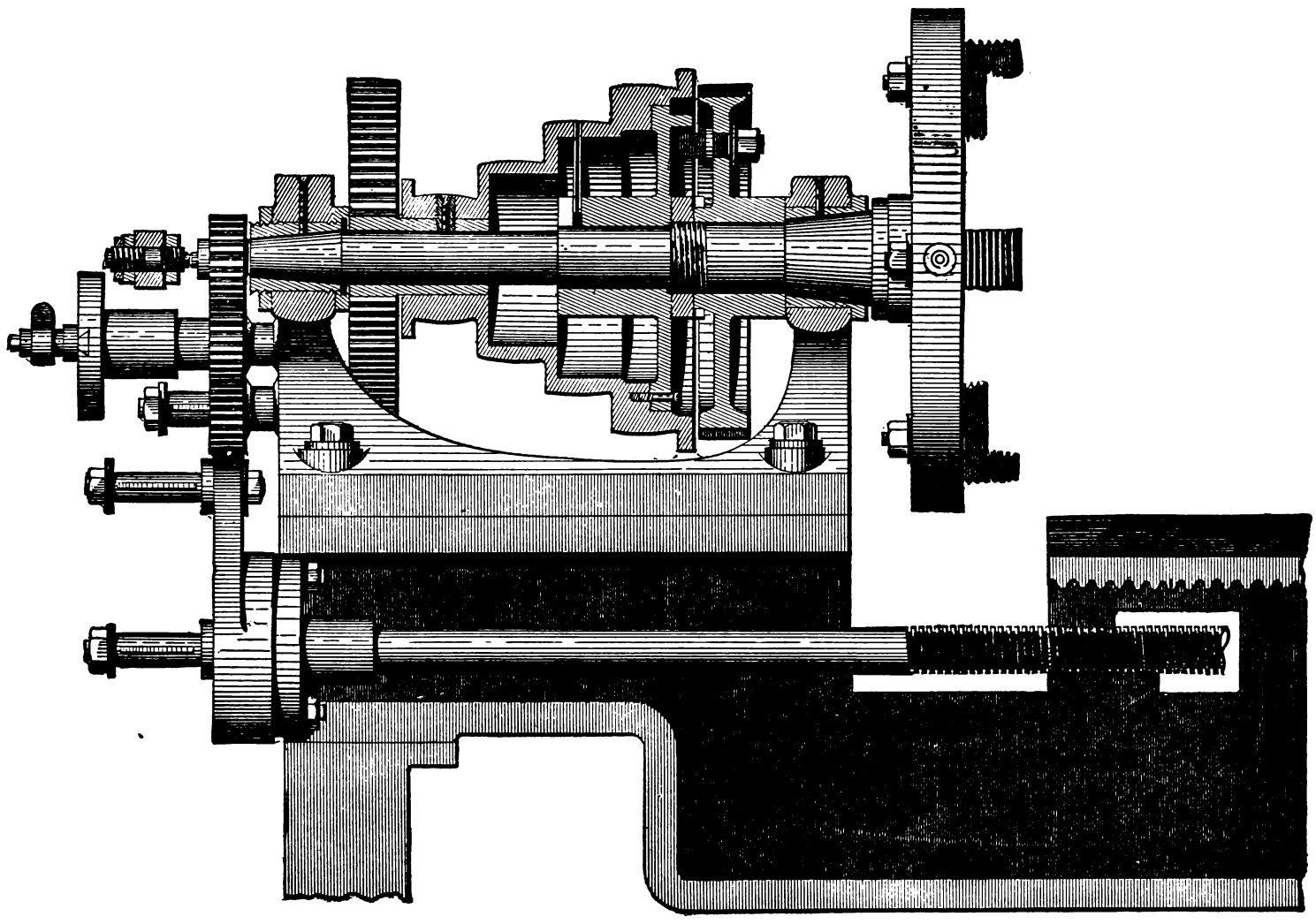

Fig. 539.

The gap lathe has not found favor in the United States, the same result being more frequently obtained by means of the extension lathe, which possesses the advantages of the gap lathe, while at the same time enabling the width of the gap to be varied to suit the length of the work. Fig. 540 (Plate X) represents an extension lathe by Edwin Harrington and Son, of Philadelphia. There are two beds A and B, the former sliding upon the latter when operated by the hand-wheel E, which is upon the end of a screw that passes between the two beds, has journal bearing in the upper bed, and engages a nut in the lower one, so that as the screw is operated the wheel moves longitudinally with the upper bed. C is the feed rod which communicates motion to the feeding screw D, which has journal bearing on the upper bed and therefore travels with it when it is moved or adjusted longitudinally. The cross slide has sufficient length to enable the slide rest to face work of the full diameter that will swing in the gap, and to support the slide rest when moved outwards to the full limit, it is provided with a piece F, which slides at its base upon the guideway or slide G.

Fig. 541 represents a double face plate lathe such as is used for turning the wheels for locomotives. The circumferences of both the face plates are provided with spur teeth, so that both are driven by pinions, which by being capable of moving endways into or out of gear, enable either face plate to be used singly, if required, as for boring purposes.

The slide rests are operated by ratchet arms for the self feed, these arms being operated by an overhead shaft, with arms and chains.

Fig. 542 represents a chucking lathe adapted more especially for boring purposes. Thus the cone pulley is of small diameter and the parts are light, so that the lathe is more handy than would be the case with a heavier built lathe, while at the same time it is sufficiently rigid for large work that is comparatively light.

The compound rest is upon a pedestal that can be bolted in any required position on the lower cross slide, and is made self-acting for the feed traverse by the change wheels and feed screw, while the self-acting cross-feed is operated by a ratchet handle, actuated by a chain from an overhead reciprocating lever; the latter being actuated from the crank-pin at A, which is adjustable in a slot in the crank-disk B. A lathe of this kind is very suitable for brass work of unusually large diameter, because in such work the cuts and feeds are light, and the cutting feed is quick, hence a heavy construction is not essential.

Examples of various kinds of lathes are given as follows:

Fig. 543 (Plate XI.) represents a thirteen-inch swing hand and drilling lathe, in which the guides or Vs for the tailstock and for the hand rest are on the edge of the bed, the top surface of which is flat, and their holding and releasing devices are in front.

Fig. 544 represents Warner and Swazey's set-over lathe, a type extensively used by brass workers. In this lathe the foot block is intended to carry the cutting tool in place of the dead centre, and for this purpose it is provided with a cross slide and quick and slow motions to the spindle.

An improved form of this foot block is shown in Fig. 545 (Plate XII.). In this the upper part A is pivoted at the forward end to the set-over slide B, allowing the spindle to be swung out of line for boring taper holes. A binder screw C at the back end clamps it securely in position.

Quick and slow motions to the spindle are provided for as in the plain set-over, the change from one to the other being effected by the lever D on the front side. This lever D, by the motion of an

eccentric, raises or lowers the nut E into or out of mesh with the screw F.

These lathes are provided with foot blocks having either round or square spindles.

Fig. 546 (Plate XIII.) represents a lathe for dressing the hexagons of globe valves and having the cutting spindles so as to operate simultaneously on two opposite sides of the hexagon. The work spindle is mounted on a chuck having the necessary index or division device.

Fig. 547 (Plate XIII.) represents Warner & Swazey's double-head lathe for turning the keys of cocks, etc. The tool consists of two complete machines mounted on the same bed, so that one man can easily attend to both.

One of the special features of this machine is the automatic feed and its connection with the tool slide, the method of its connection being such that the tool slide can be fed automatically either parallel to, or at any angle with, the line of centres. This is accomplished as shown in Fig. 548 (Plate XIV.). The tool slide A is connected with the sliding rack B by the stud C. The lower end of this stud C fits into a block D sliding in a rectangular slot planed cross-ways in the top of the rack B.

The guide F for the tool post slide A, which swivels at the line E E and is held by clamp screws, can thus be set at any desired angle without destroying the connection between the slide and the rack. The rack B gears into the pinion G, which is fixed on the same shaft with a worm wheel H. This worm wheel is driven by the worm I, which forms part of the shaft J.

The other end of the shaft J is connected with a reversing mechanism consisting of a clutch K, actuated by the lever L and connecting the bevel gear M (which is fastened to the shaft J) with the cone shaft N, either directly or through the other two bevel gears X and P, thus giving motion in each direction. When the lever L is vertical, as shown in the figure, the clutch is disconnected from both gears and the tool remains stationary.

In turning a key the feed can be arranged so as to make the tool take a single cut across the key and then stop, or so as to take a cut in one direction, then reverse and return to the starting point, and then stop. The latter way is usually preferable, as on the return the tool will take a light finishing cut.

The method of imparting either of these motions is as follows: Attached to the rack B is a rod R, carrying three adjustable stops. Two of these, S and T, are plain collars held by set screws, and when these alone are used to act on the clutch lever L, the tool takes a single cut, its progress being arrested at the end of that cut by one of the stops pushing the clutch lever into its vertical position. The third stop U contains a short spiral spring, and when it is used the stop T is left loose on the shaft, merely forming a washer between the spring and the lever.

The operation is as follows: With the tool at the tail block end of its travel a key is placed in the lathe and the feed started by pulling the upper end of the clutch lever towards the carriage. The tool is then fed towards the head, taking the first or roughing cut over the key.

This movement of the tool continues until the stop T comes in contact with the clutch lever. The first result is to compress the spring in the stop U. As soon as this has taken place the beveled end of the stop U comes in contact with and presses down the latch V, thus releasing the clutch lever and allowing the spring to force the lever over and reverse the direction of the feed. The tool then travels back, taking a light finishing cut, as spoken of before. Finally the stop S acts on the clutch lever, bringing it into its central position and stopping the feed with the tool in its original position, ready for another key.

In actual practice the time consumed in the foregoing operations in one machine is sufficient to enable the man in charge to remove the finished key from the other machine, insert a new one, and start the feed.

Thus the two machines not only do the work with practically no waste of time, but by means of the automatic feed and the fine screw adjustment to the swivel slide, the finished product is far superior to that turned out by the slide rest method, requiring less grinding of the key to fit the cock.

THE HENDEY-NORTON LATHE.—Fig. 549, Plate XV., represents the Hendey-Norton screw-cutting engine lathe. Fig. 550, Plate XV., being an outline view, showing the gears for screw cutting arranged in a line beneath the headstock, as may be more clearly seen in Fig. 551.

Fig. 552, Plate XVI., shows the arrangement of the gearing and clutch for reversing the travel of the carriage both for feeding and screw cutting. Fig. 552*a* in the same plate shows the construction of the gearing in the apron as used on the small size of lathe, which has no power cross feed. Fig. 1, Plate XVI.–A, gives examples of screw-cutting work done on this lathe.

The notable feature in this lathe is the facility and exactitude with which threads may be cut without requiring to arrange the change gears, which consist of a train of gears mounted in the form of a cone directly on the screw of the lathe, and secured thereto by one spline, the whole being enclosed in a case which forms the cover for the gears, and the bearings at either end for the screw. In the lower part of this box is arranged a driving shaft with bearings parallel to the screw. The shaft has a spline the full length of the inner side of the box, and has sliding upon it the driving, or stud gear. This gear bears the proper relation to all the gears in the cone, to cut the regular list of threads from 6 to 20, its position relative to the gears in the cone being controlled by the handle shown, the inner end of which is a forked casting with bearings on either side of the gear, and in an upper extension of the same fork are the bearings for an intermediate gear which is thrown in or out of the various gears of the cone by means of the handle as shown. The index plate on the front has notches of sufficient depth to receive and guide the handle and gear in perfect line with the cone gear wanted, the thread which the combination will cut being stamped above each notch. The latch for holding the handle and gear in place is arranged to secure the handle, both in and out, entering the upper hole when in, and the upper part of the notch for handle when out. This prevents any possibility of the handle being thrown out from the motion of the shaft or gears when running, and also holds the handle in position where last used, which would otherwise fall to the lower end of the slot. Thus far the device is described as only cutting the twelve regular threads from 6 to 20—which include all the ordinary threads in daily use—and is accomplished without change, aside from the movement of the lever from one notch to the other.

The lathes here shown have but two changes; cutting from $1\frac{1}{2}$ threads per inch to 80 threads per inch, and have one extra gear to cut $11\frac{1}{2}$ threads per inch for steam pipe, so often called for; yet should occasion arise to cut any special thread not provided for, this arrangement does not interfere with the making and using of any special gear, the same as in any ordinary lathe.

In Plate XVII., Fig. 1 represents a Forming Monitor Lathe, and Fig. 2 a detail of the forming tool. This machine embodies a departure from the old method of turning irregular shapes. Its operation is extremely simple, and the quality of the work turned out is such that it has rapidly taken the place of all other methods.

The forming tool slide is the most important feature. In the one shown in the cut the tool is fed forward by means of a rack and pinion, passing under the piece at the proper distance to give it its right diameter. At the beginning of the return stroke the tool, by the motion of a double eccentric, drops slightly, thus preventing all dragging across the finished work. Means are provided for adjusting the tool in all directions.

The several figures in Plate XVIII. represent a patented forming tool-slide of later type for this same machine. In this form the tool, instead of lying horizontal and passing under the work, stands nearly vertical and passes up and down back of it. The holder A is planed at slight angle on the back side, giving clearance to the tool as it passes by the work.

Motion to the tool slide is obtained by means of the rack B and pinion C and the lever D. Just before the return stroke a slight turn of the hand wheel E carries the tool back and prevents marring the finished work.

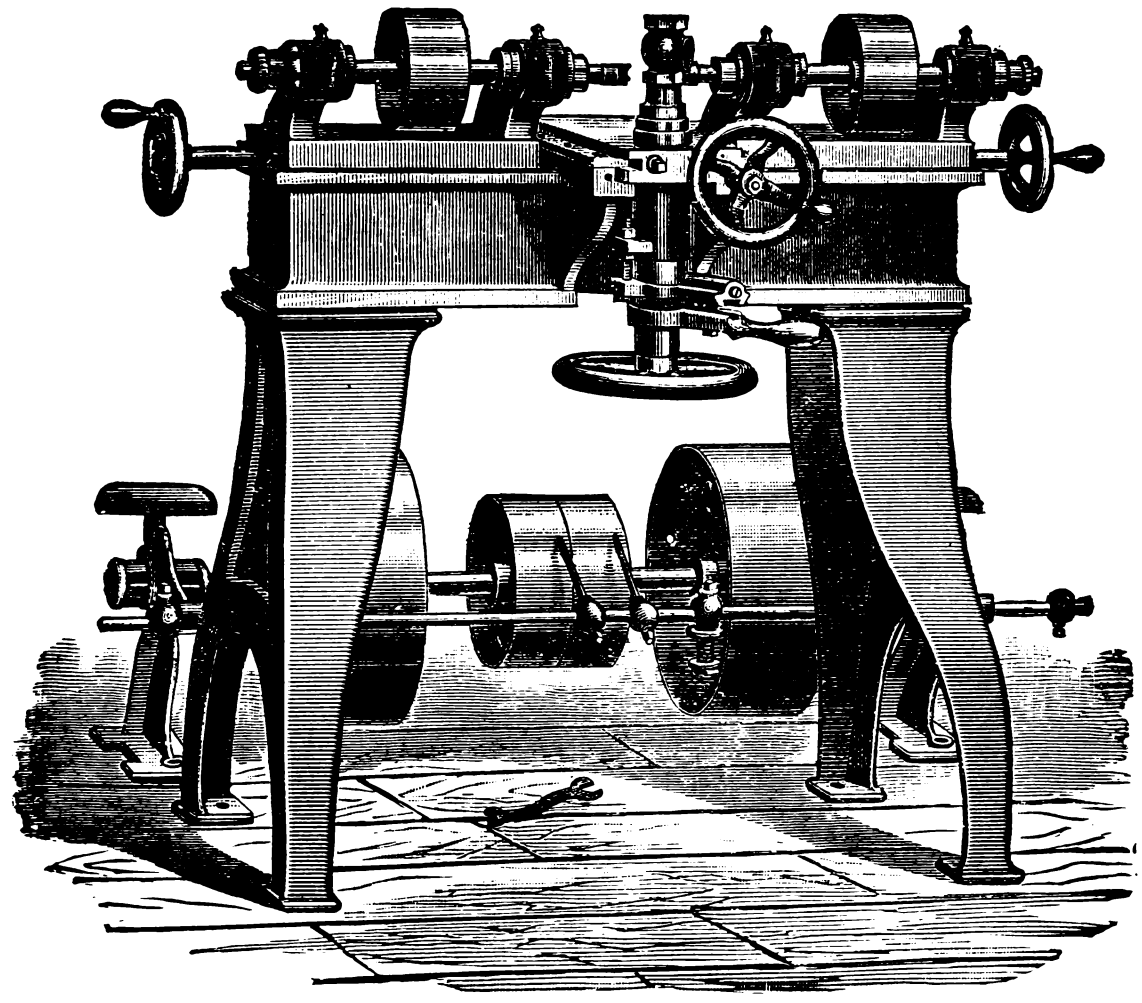

Fig. 546.

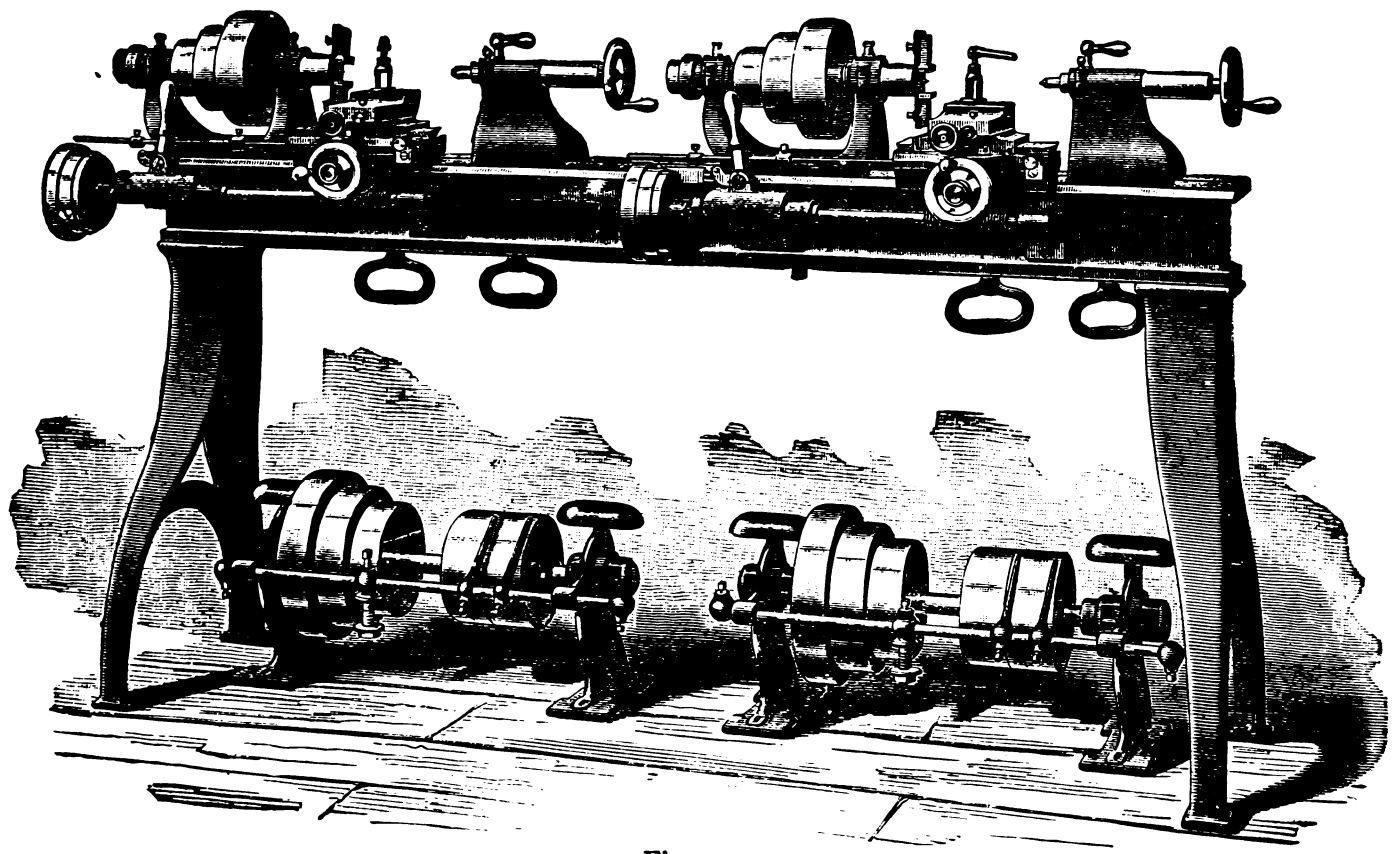

Fig. 547.

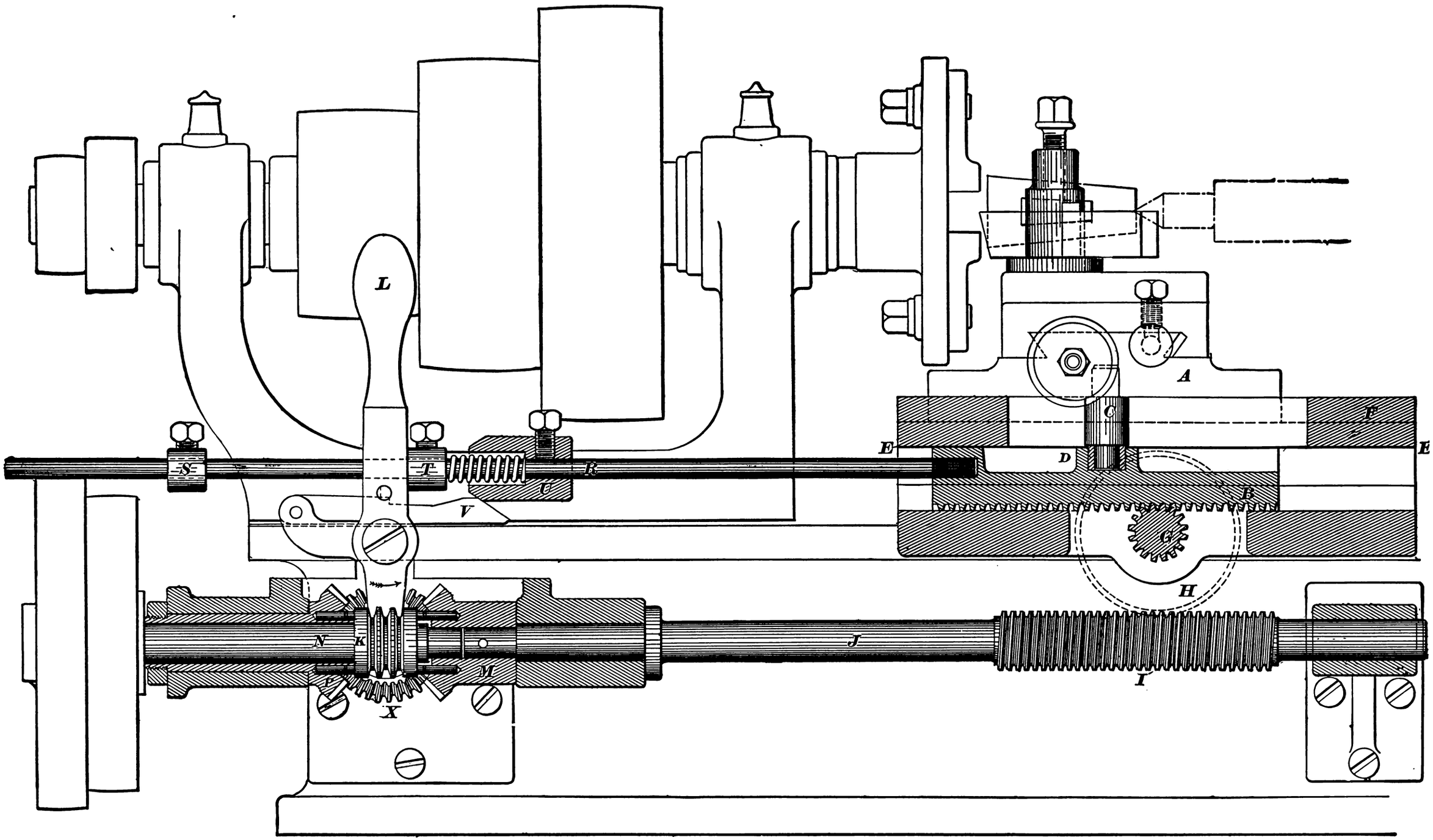

Fig. 548.

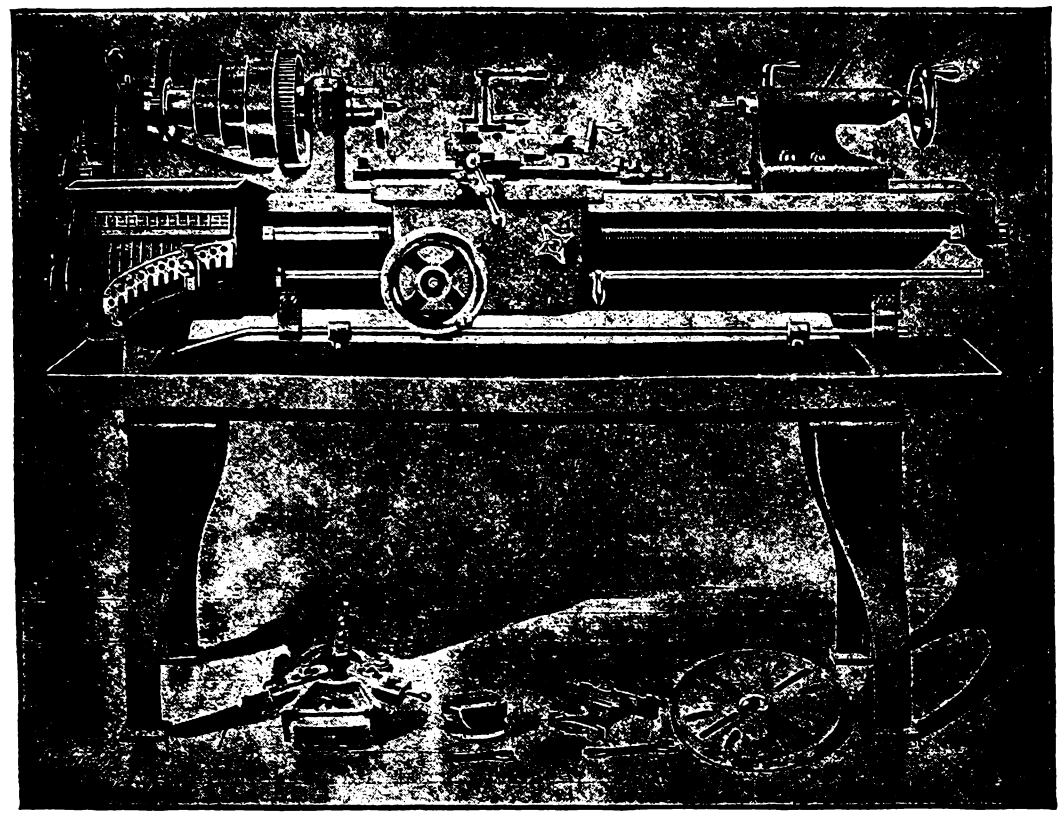

Fig. 549.

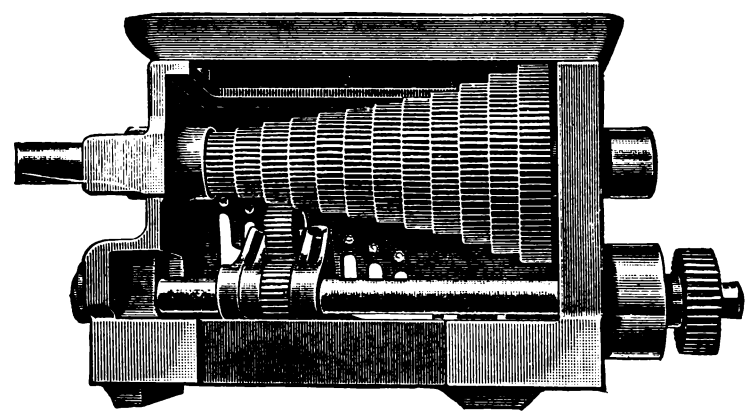

Fig. 551.

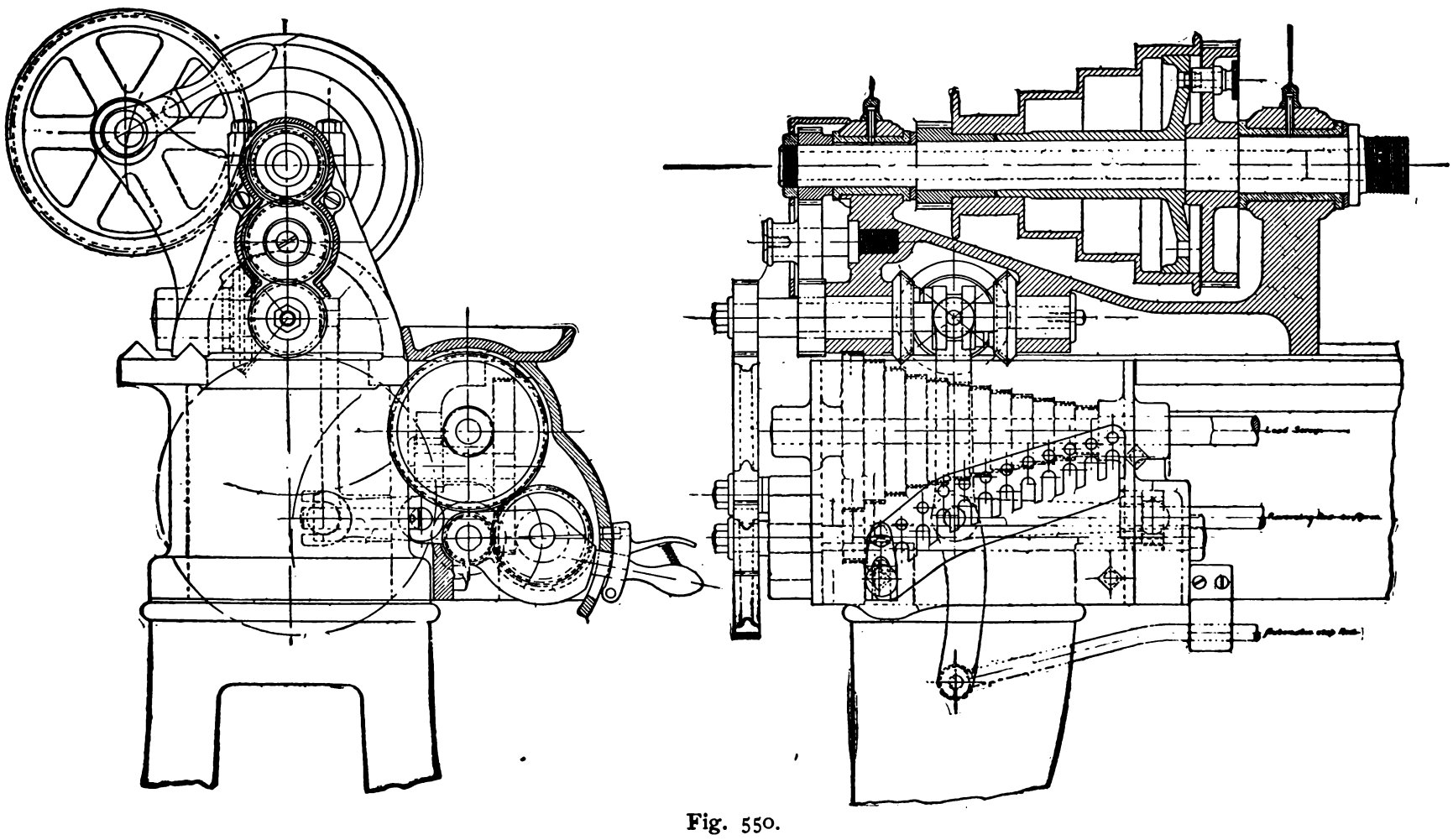

Fig. 550.

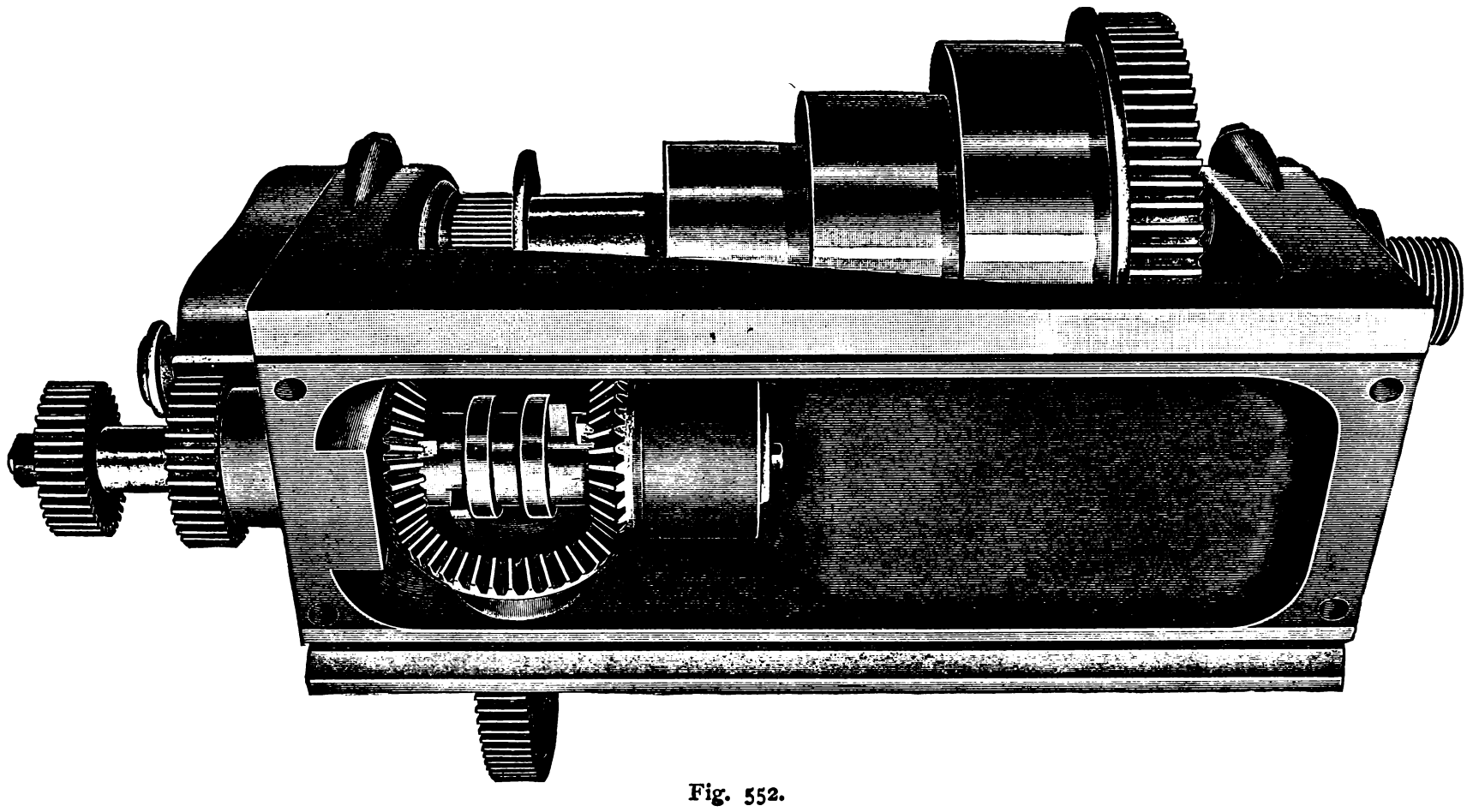

Fig. 552.

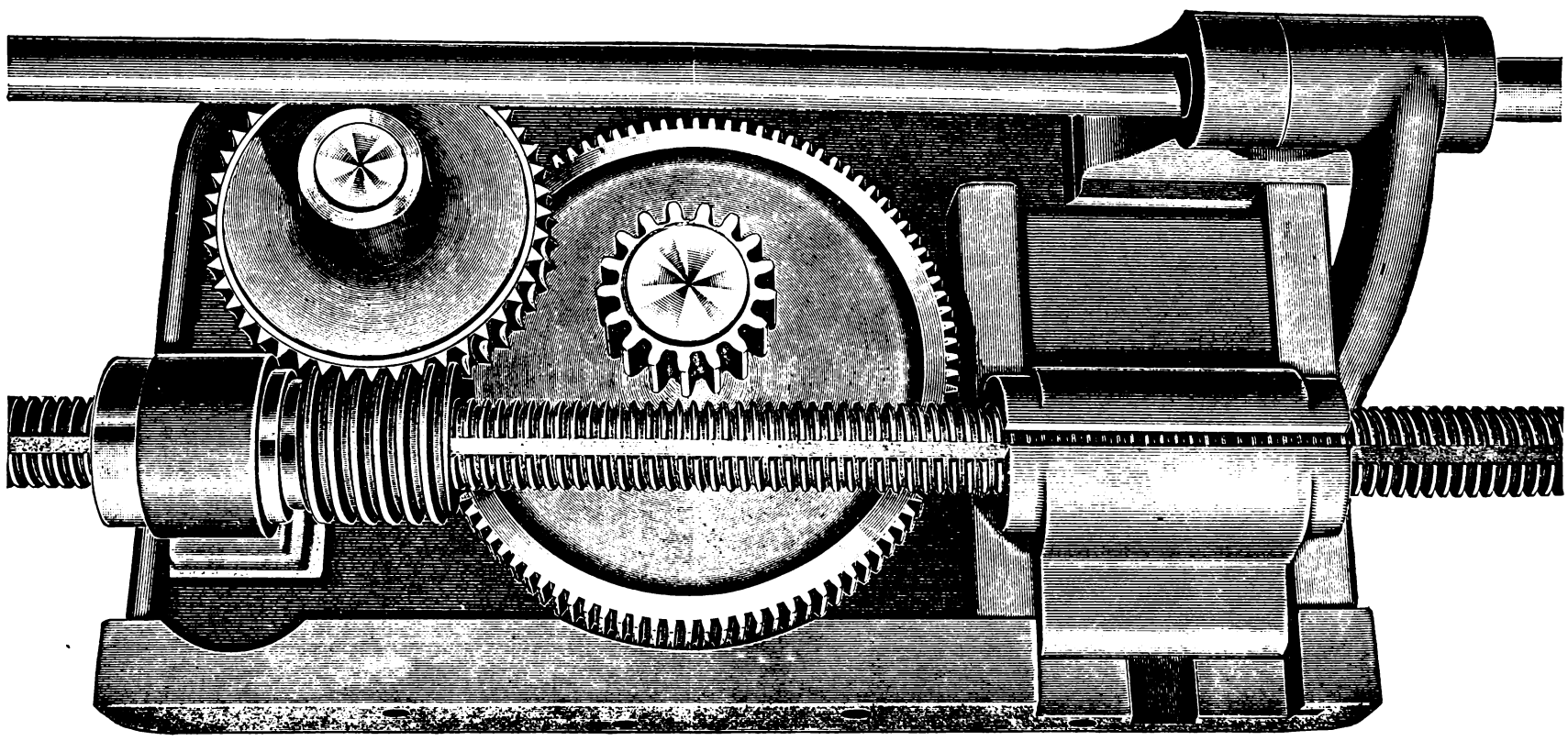

Fig. 552*a*.

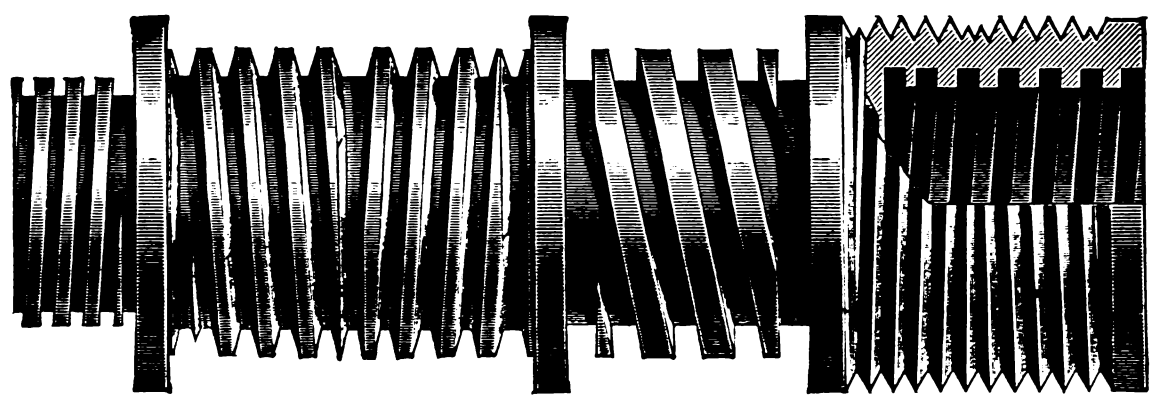

Fig. 1.

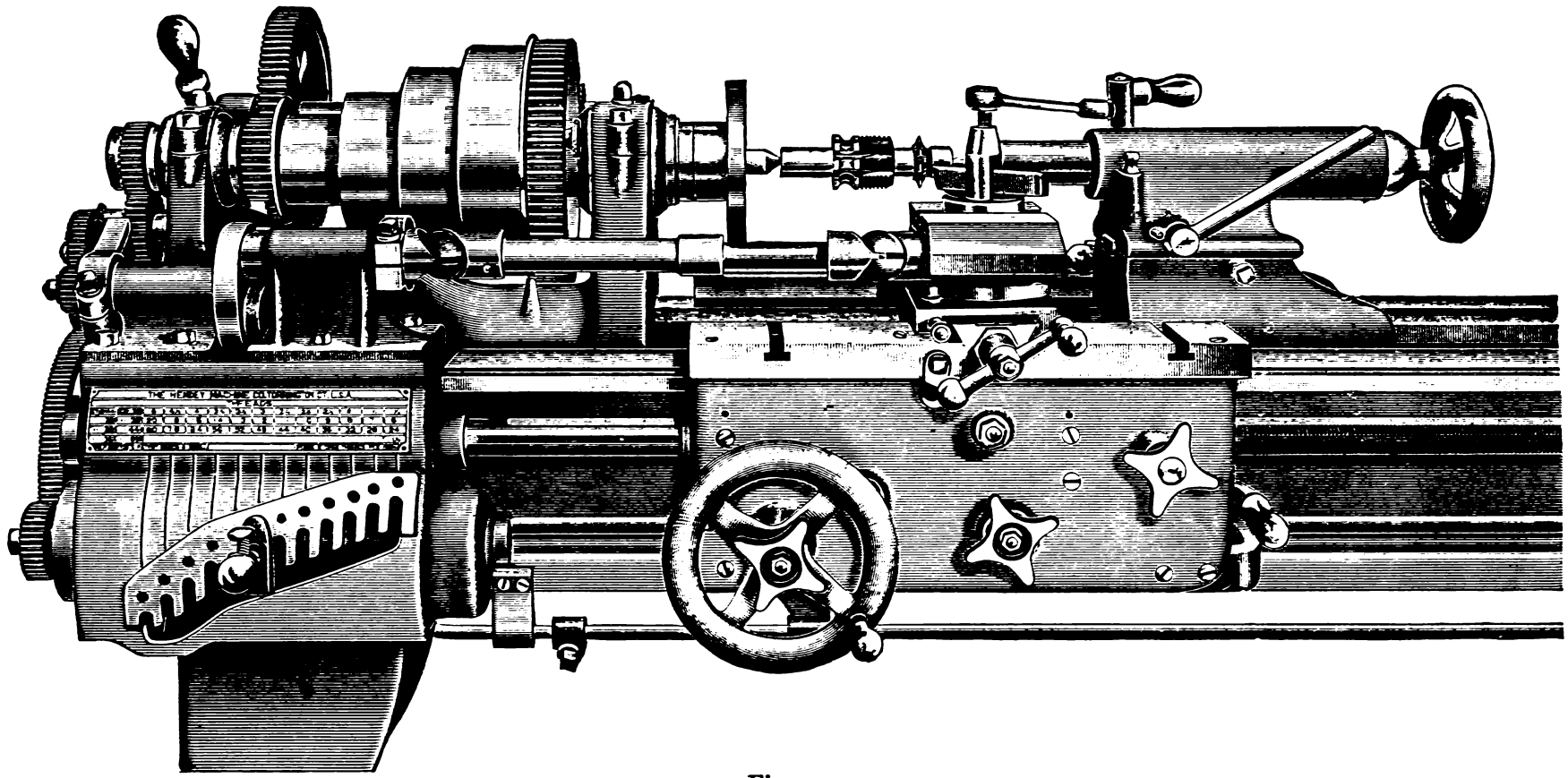

Fig. 2.

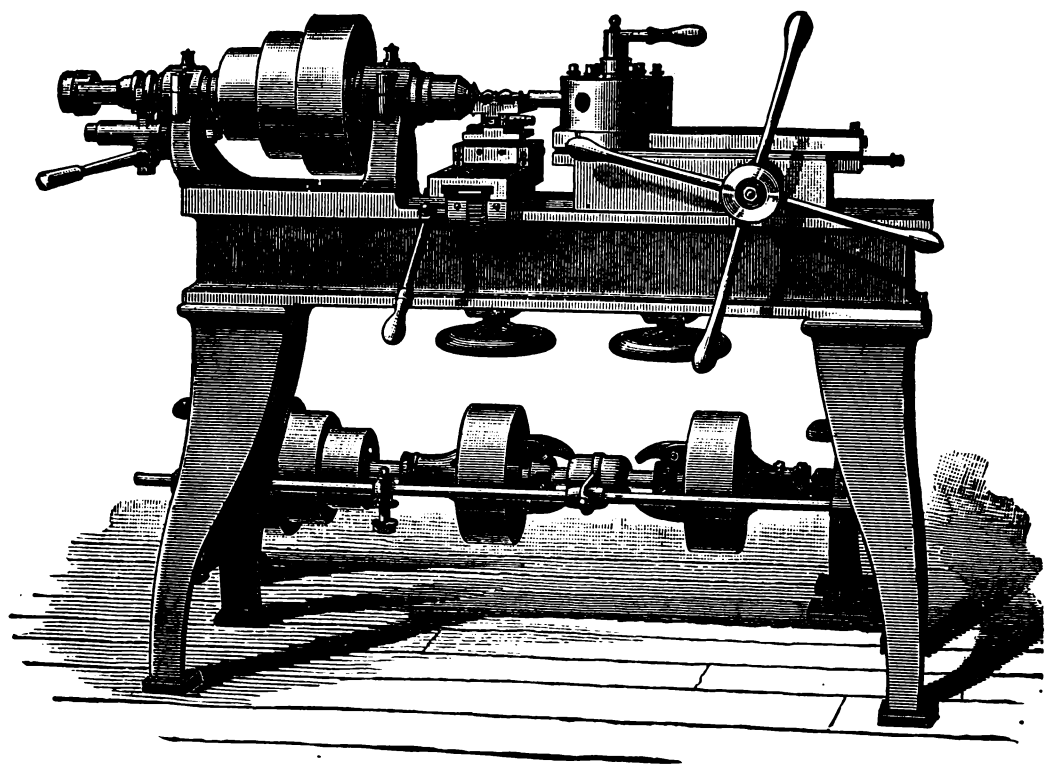

Fig. 1.

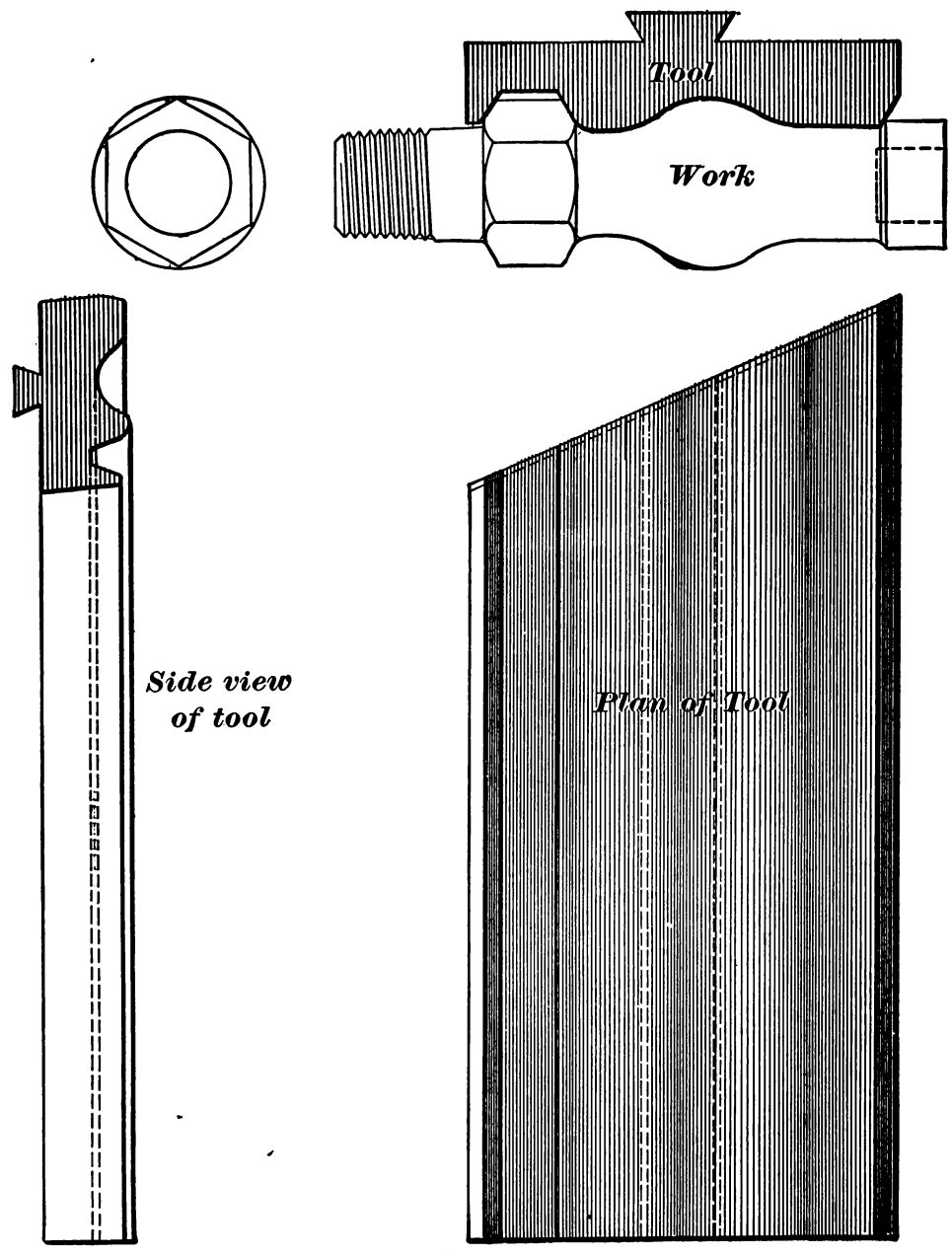

Fig. 2.

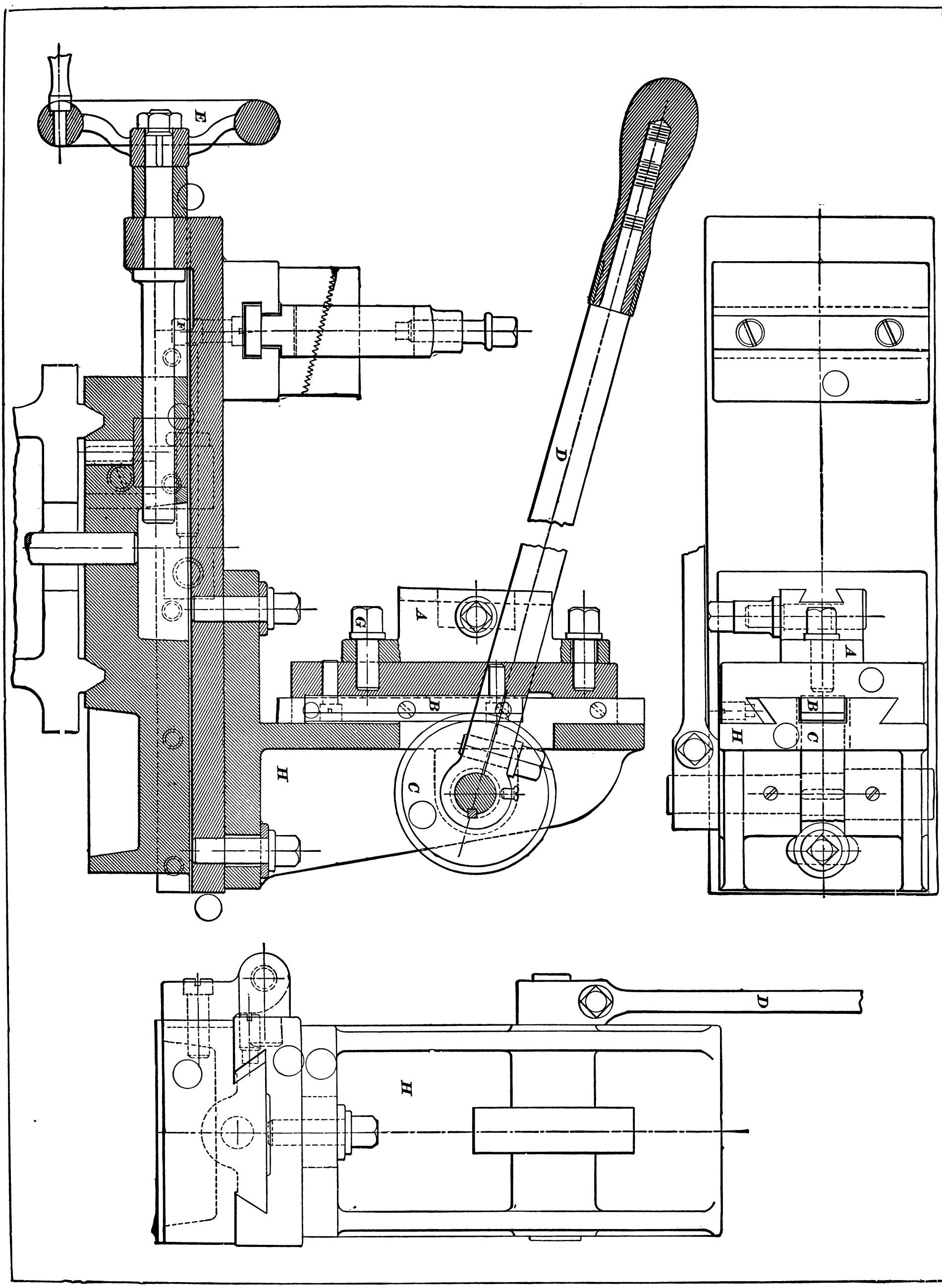
E
F
G
A
B
C
H
D
A
B
C
H
D
H

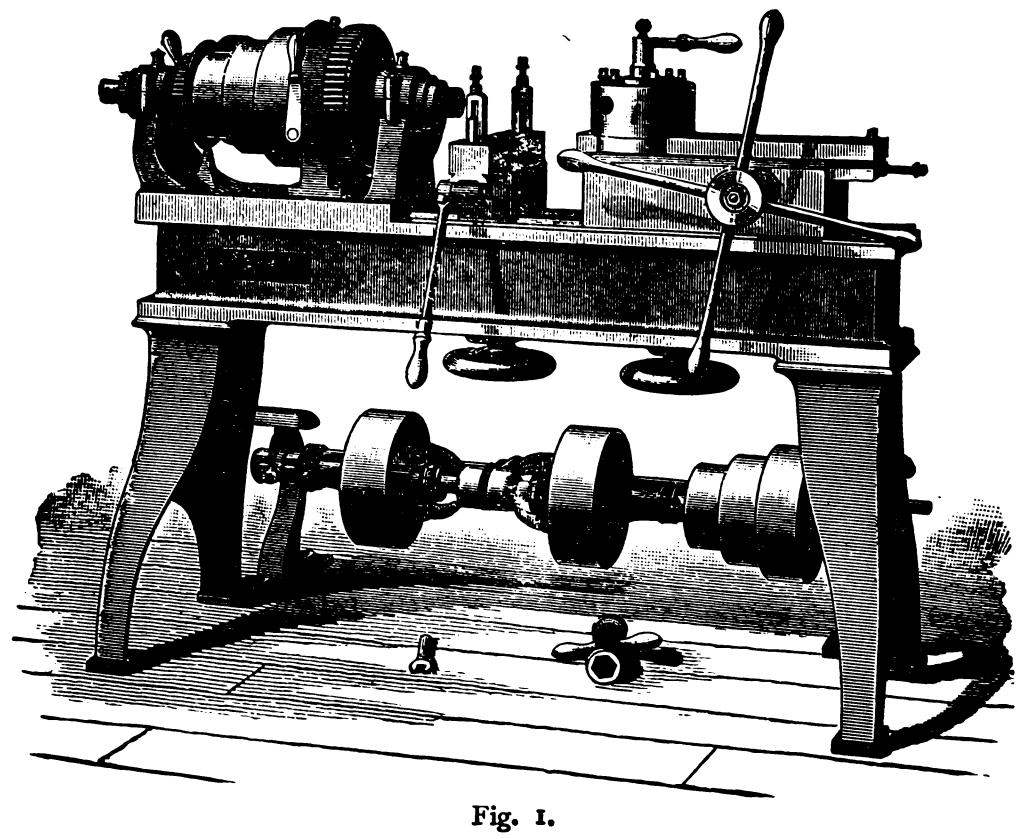

Fig. 1.

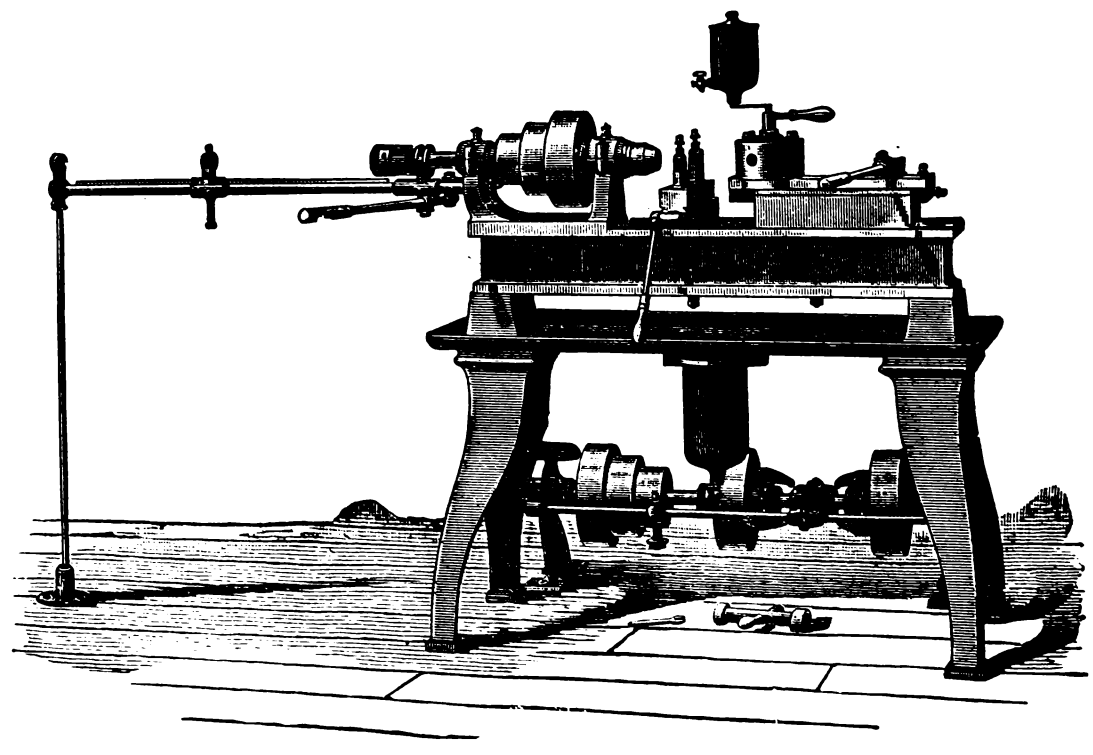

Fig. 2.

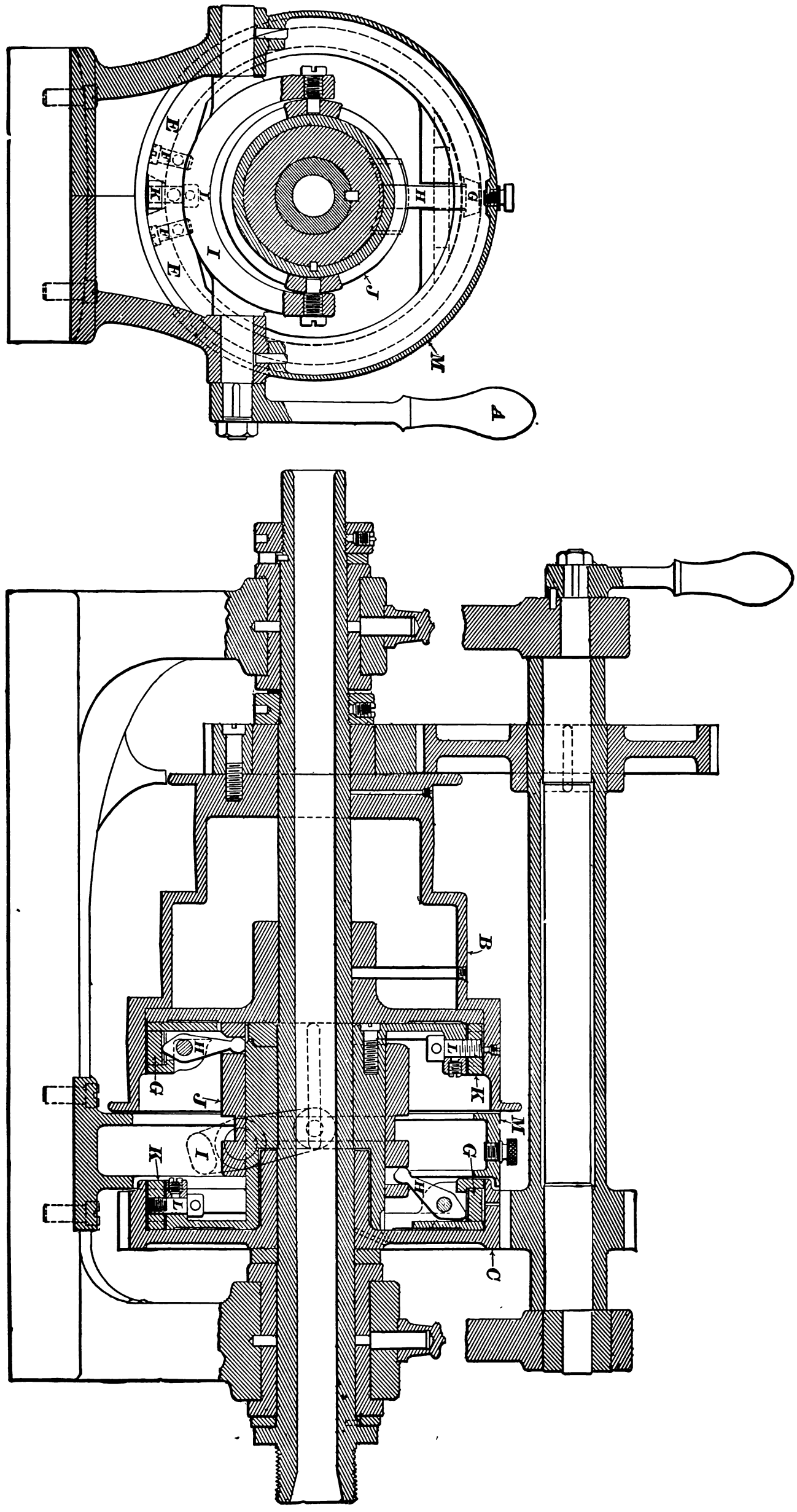
E
F
K
L
I
H
G
J
M
A
B
C

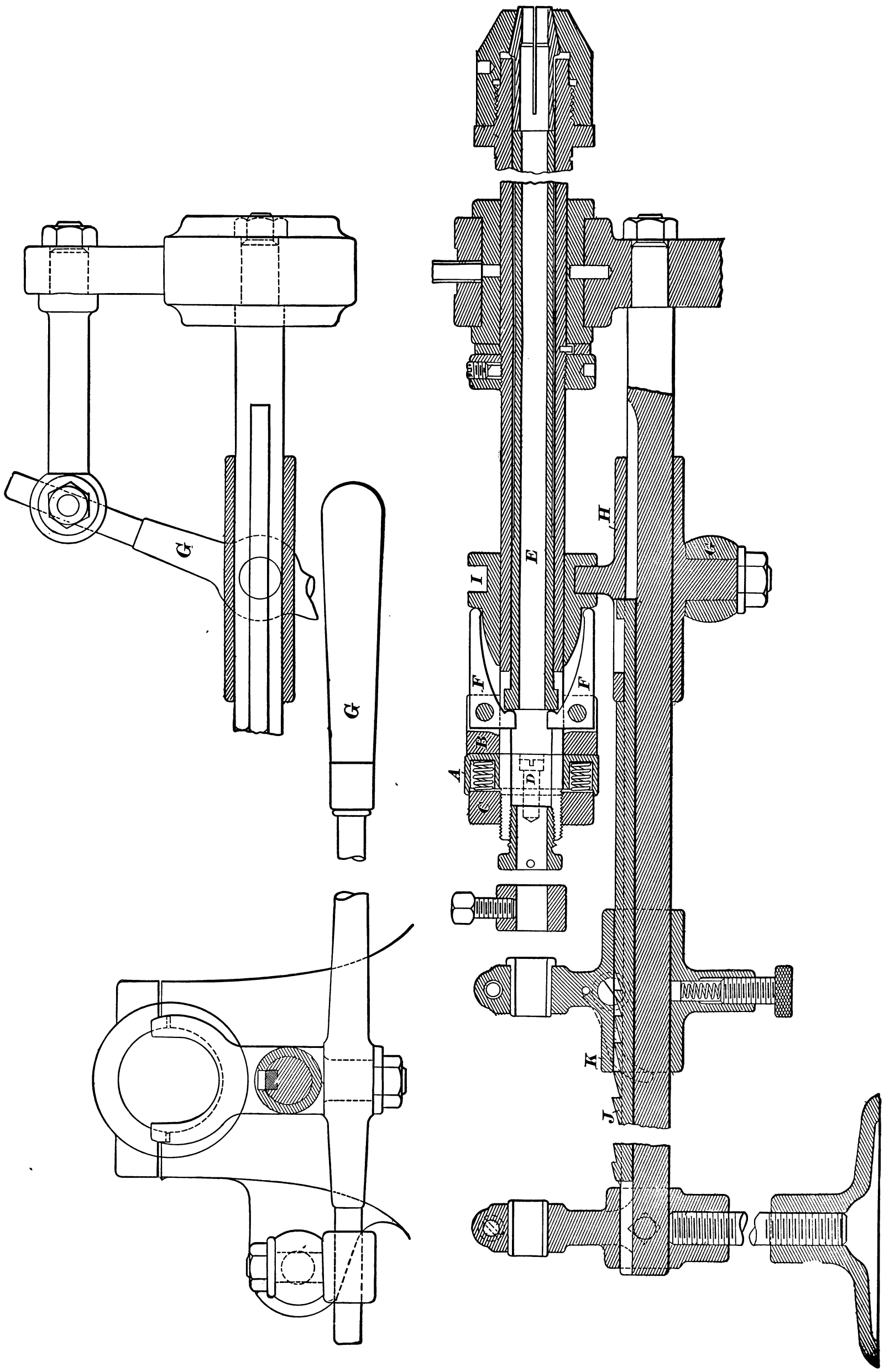
G
G
E
H
I
F
F
B
A
D
C
K
J

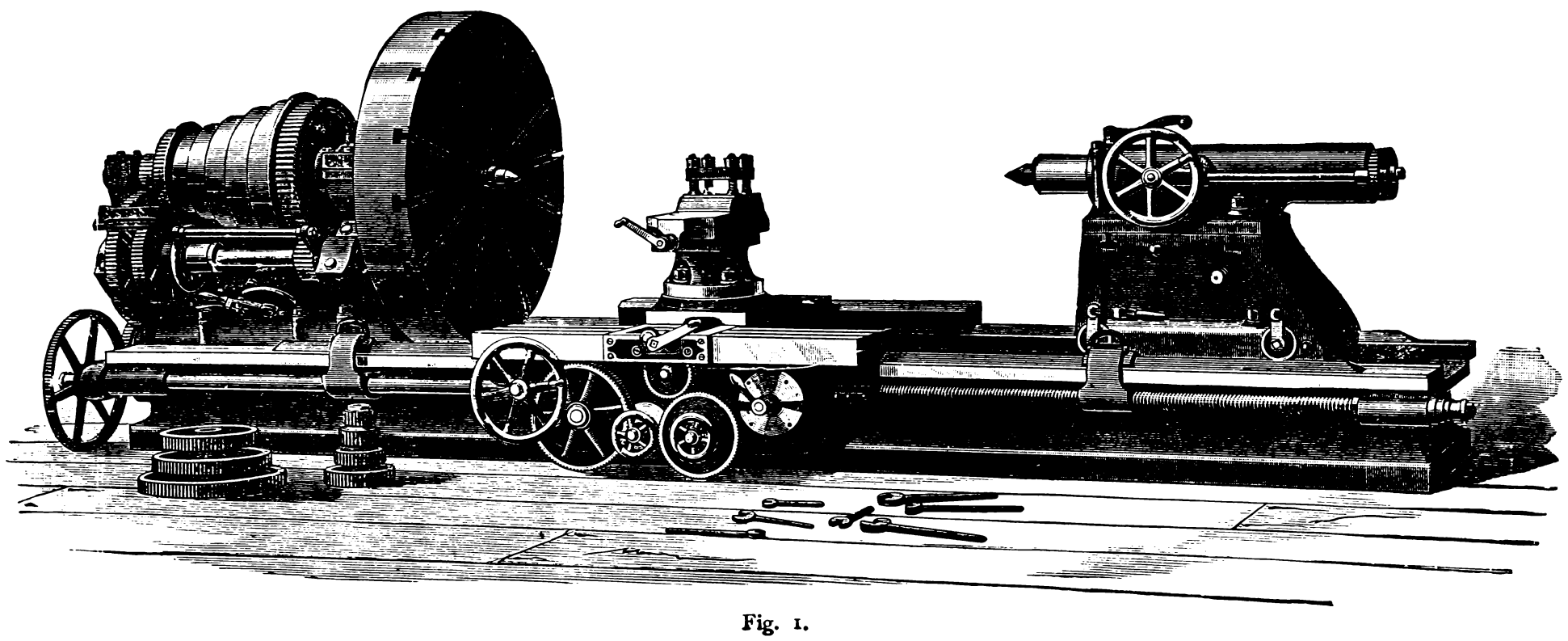

Fig. 1.

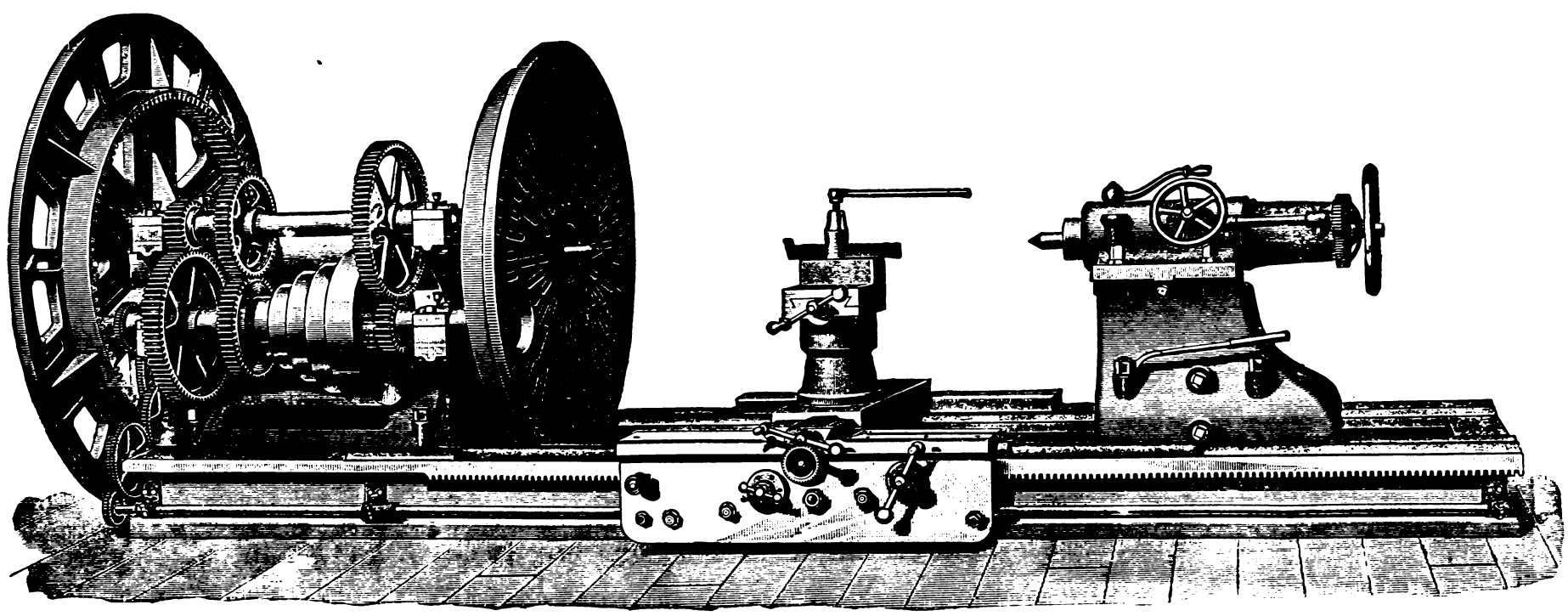

Fig. 2.

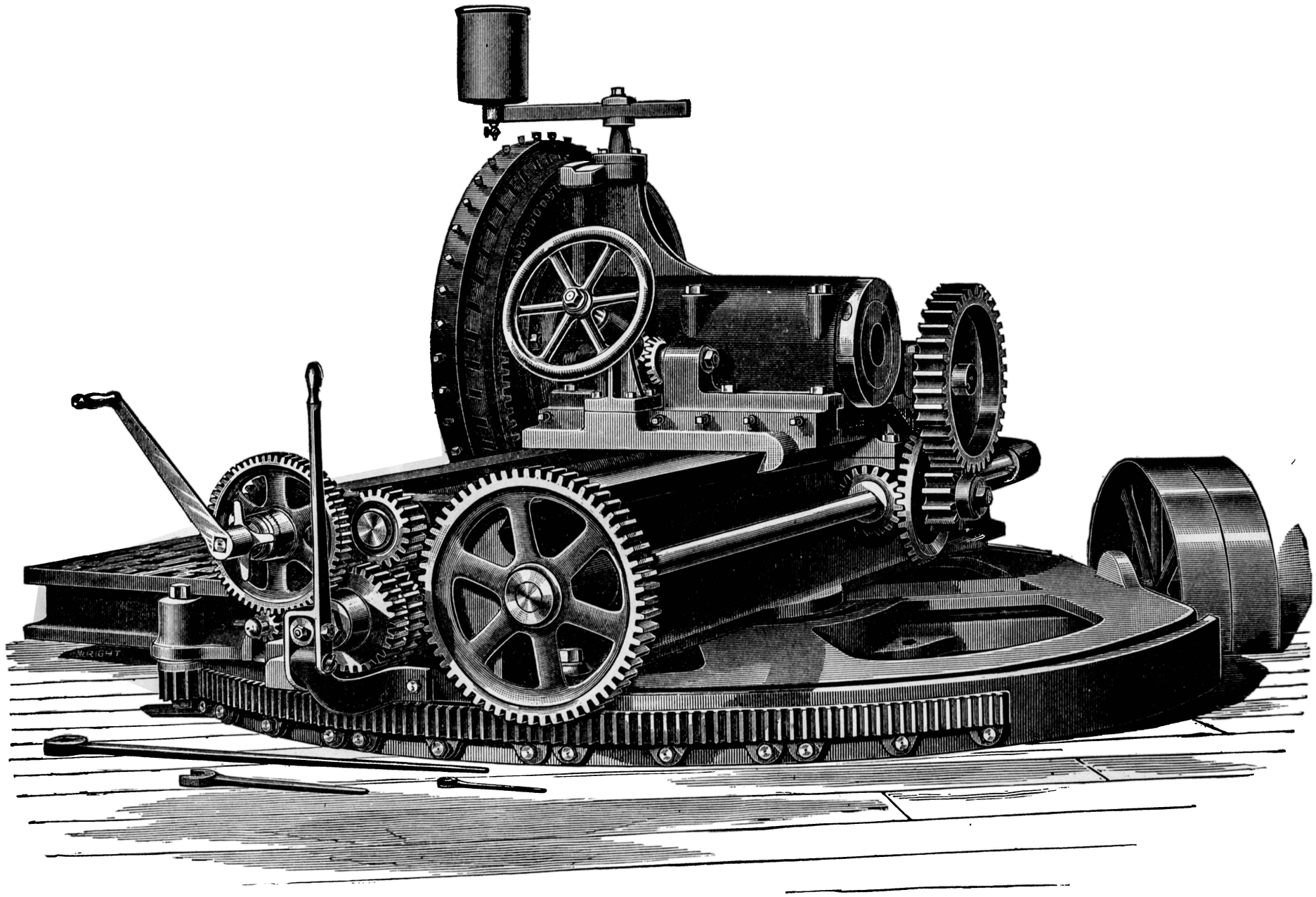

This same hand-wheel serves to adjust the tool to the diameter to be formed, the slide being brought against an adjustable stop-screw F at each operation.

Clearance is given the tool sideways, when forming shoulder pieces, by swiveling the tool block A on the lower screw G, while the knee H itself can be set around to compensate for the shear of the tool. It will readily be seen that this form of slide not only admits of easier and more rigid adjustment, but its capacity is much greater than it is possible to obtain with the horizontal one.

An automatic chuck is provided with these machines, which is worked by a lever at the left end of the head. By means of this the pieces to be formed can be placed in position, rigidly gripped, finished and removed without stopping the machine. In operation the work requiring the tools in the turret is first done, after which the forming tool is drawn past the part to be formed, thus completing the piece.

Fig. 1 (Plate XIX.) represents an improved type of the Monitor or Turret Lathe that is especially convenient where two speeds are required to complete a piece of work, as it obviates the necessity of stopping the machine to throw in the back gears. By a simple movement of the lever A (Plate XX.), at the side of the cone, the speeds can be varied in the ratio of four to one, thus giving the proper changes for the different diameters in the piece being turned, and also between the boring and tapping. Its construction can be readily followed by reference to Plate XX.

This represents a longitudinal section through the head and also a cross section through the clutch mechanism. In this form of head both the cone B and the head gear C run loose on the spindle. Between the two is the driver D keyed fast to the spindle. This driver consists of a hub carrying a head at each end, the one at the gear end being cast on, while the one at the cone is screwed on, to admit of assembling the parts.

In the periphery of each of these heads is turned a rectangular groove, and in these grooves fit rings E, E. These rings are made in halves, each half being fastened at one end to the head by the screws F. The other ends of the rings are beveled, and between them fits the wedge G.

Motion is imparted to this wedge by the toggle H, and this in turn is actuated by the lever A through the fork I and sleeve J. Thus, when the lever A is thrown towards the head gear the wedge in the head gear ring is thrown out, the ring expanded and the gear is clutched to the spindle. When the lever is thrown toward the cone the head gear is first released, and then the wedge in the cone ring is thrown out, the ring expanded and the cone clutched, as in the case of the head gear. When the lever is vertical both the head gear and the cone are free, and the spindle remains stationary.

An excellent feature of this clutch is the means provided for taking up wear and adjusting the rings. Between the fixed ends of the rings E, E (Plate XX.), and opposite the actuating wedge G, is a second wedge K, similar to the other except that it is reversed, the small end being toward the centre. Into this wedge is tapped the adjusting screw L, which can be easily worked from the outside when the shield M is removed. The wedge K also serves another purpose. It is made long enough to pass through the ring and across the flanges of the head on either side. The ends of the wedge where it passes through the flanges being squared, it thus serves as a key or driver for the rings, taking all side strain from the screws.

These frictions have shown themselves in practice to be both effective and durable, and the principle involved in the style of head itself is such that it readily commends itself to manufacturers.

Fig. 2 (Plate XIX.) represents a screw machine with wire feed for automatically feeding the stock without stopping the machine. It embodies several improvements, which are clearly shown in Plate XXI. One of these is the spring collar A, interposed between the finger-holder B and the backing nut C. The objection to this form of wire feed chuck hitherto has been that, while holding securely stock that is drawn exactly to gauge, it required constant adjustment for rough stock or where there was any variation in the finished rod. This difficulty has been entirely obviated by the use of the spring collar. This consists essentially of a steel collar carrying in the face, next to the backing nut C, a nest of spiral springs. It is held to the nut C by the screws D, and these also serve to increase or diminish the force of the springs, as occasion may require.

The collar is adjusted so that the pressure against the plunger E is sufficient to hold the work securely, while at the same time it allows the spring chuck to adapt itself to any variations in the diameter of the rod. It has been found perfectly feasible, by the use of this collar, not only to hold finished rods of varying diameters, but also rough rods, and even castings of various kinds. Its adoption has made easy the finishing of many varieties of work hitherto deemed impracticable for automatic wire feeds.

The fingers are operated by the fork H and the wedge I. This fork is actuated by the lever G, which also feeds the wire forward, after the chuck has been opened, by means of the ratchet J and the dog K.

A forge lathe is a lathe of great strength in all its parts, so as to enable it to take very heavy cuts on larger rough forgings, it being found cheaper to cut out the work, as it were, rather than to forge it down to size when the forging is massive.

A lathe of this description is shown in Fig. 1 (Plate XXII.), which represents a sixty-inch lathe constructed by the Niles' Tool Works.

The lathe swings sixty inches over the ways and forty-six inches over the carriage. The cone is mounted on an independent spindle, with a steel pinion geared into an internal gear on the back of the face plate. It has five steps for a belt four and one-half inches wide, and has two sets of back gears, providing fifteen changes of speed to the face plate. The main spindle is ten inches in diameter at the front end, and the bearing is fifteen inches long. The face-plate is bolted fast to the spindle.

The carriage is sixty-eight inches long, and is gibbed both front and back with longitudinal, cross, and angular feed. The tool is held by four clamps and studs. The tool-rests can be removed at will, and then the carriage presents a large, flat surface, on which work may be bolted for boring.

The foot-stock is held to the bed by four bolts, and it is also provided with a strong pawl, which engages with a rack cast in the bed. This pawl is raised or lowered by means of the hand knob seen at the side of the foot-stock, and, when engaged, makes a positive lock for the foot-stock.

The foot-stock has four rollers, mounted on eccentric studs with clamps. By turning the studs a quarter-turn and clamping the straps shown in the illustration (and which are connected to these studs), the rollers are brought into engagement with the bed, and the entire foot-stock is raised slightly from the ways, and can be readily adjusted to any desired position.

The upper side of the foot-stock is also held by four bolts. This arrangement allows the foot-stock to be set over for taper work without unclamping from the bed, and is very convenient when working with heavy pieces. The foot-stock screw is geared at the back end, and arranged to be operated by the hand-wheel shown at the front in the illustration.

The lathe is also provided with heavy, steady and follower rests, and the steady rest has an opening of extra size to admit large shafts. Adjustable hinged supports for the lead screw are also provided, which are arranged to slide upon the ways. These can be removed from the bed at will, or adjusted to suit the convenience of the operator.

When the diameter of lathe work exceeds about ten feet it is usual for the lower part of the work to pass below the floor: what is known as a pit lathe being employed in connection with a pillar or movable compound slide rest, sometimes operated by a star feed, or a pawl and ratchet feed operated from overhead by a chain.

Fig. 2 (Plate XXII.) represents the triple geared Putnam Lathe, with a back face plate for a pit lathe.

SURFACING LATHE WITH CUTTER FACE PLATE.—In Plate XXIII. is represented a surfacing lathe, designed and constructed by Messrs. Bement, Miles & Co., of Philadelphia, Pa.

This class of lathe is sometimes designated as a rotary planing machine; it may more properly be termed, however, a surfacing lathe, since it has the chuck, live spindle, and feed motions characteristic of a lathe. In place of slide rests and the ordinary cutting tools, a large number of tools are inserted around the cir-

cumference of what may be termed the lathe face plate, which is mounted upon a carriage operating along a slideway upon the bed, which is mounted upon a plate forming a quadrant of a circle, upon the centre of which the lathe bed is pivoted, so that the face plate can be set at any required angle within 90 degrees. The work is firmly bolted to a fixed table provided in the front of the face plate.

This class of lathe will surface work with great rapidity and effectiveness.

A chucking lathe is one having a swing that is large in comparison with the length of the lathe bed or shears.

A simple form of chucking lathe is shown in Fig. 1 (Plate XXIV.), there being no tailstock or back head. The compound rest is moved along the bed or shears by means of the screw at the right-hand end. The compound rest has an automatic feed of eight inches and automatic cross feeds. Both these feeds are reversible.

Fig. 2 (Plate XXIV.) is a chucking machine or lathe by the Pratt & Whitney Company.

In place of having a gap in the bed to give capacity for the necessary amount of swing, the turret slide block is made high enough to give the required swing, which gives a maximum of swing for the full length of work the lathes will take in.

The machine has an automatic feed, which is automatically tripped at any desired point, and is also provided with a special rapid feed for reaming. The head is provided with an internal friction clutch which is worked by the lever to the left of the main cone gear, and this clutch enables the back gear to be thrown in or out without stopping the machine.

A rack and pinion motion is provided for moving the foot-stock or turret-slide block on the bed, and adjusting it, this being worked by the handle shown at the side of the block. The turret is revolved automatically by the movement of the slide, the same as a screw machine.

The spindle has a hole entirely through it, and the machine is furnished with drawback collet mechanism, when desired, or other modifications are made adapting it to special requirements.

DOUBLE AXLE LATHE.—An improved form of double axle lathe, designed and constructed by Messrs. Bement, Miles & Co., of Philadelphia, Pa., is illustrated in Plate XXV. The bed is provided with two slides with flat surfaces, such slides being generally preferred to vee slides in lathes of this class.

Each slide is provided with a separate rest and tool post, which may be operated separately by hand, or conjointly by the feed motion. The dead centre is fast in its tailstock. The ordinary headstock is here replaced by a tailstock having a firm tail-spindle locking device. The axle passes through the driving head, and is driven on a dead centre at each end.

This ensures the production of true work, and gives a rigidity which enables the carrying of very heavy cuts. A rotary pump furnishes a water supply to a central tank, from which, by suitable pipe service, a liberal supply of water can be furnished to each cutting tool, keeping it cool, and enabling the tools to work at a high rate in feet per minute.

Fig. 1 (Plate XXVI.) is a simple form of gap lathe, constructed by the Fitchburg Machine Works. The upper bed slides longitudinally to open the gap to the required distance or width. The guideways are upon the outer edges of the shears, and the tailstock or back head is rigidly constructed to enable it to feed drills, boring bits, etc.

Upon the shears of this lathe there is shown a drill-holding rest, but it is obvious that this can be replaced by a compound slide rest.

An example of a modern gap lathe is shown in the Bridgeport Machine Tool Works lathe, Fig. 2 (Plate XXVI.).

This lathe is provided with a sliding bed that may be secured to the lower bed at any required point, to suit the width of the work. When the upper bed is moved to come close up to the face plate and is secured there, the slide rest has a-firm foundation to support it, without any opening beneath it, as in the ordinary gap or break lathe, as it is sometimes termed.

This lathe is provided with a friction clutch motion, which enables the speed to be changed from single gear to back gear without stopping the lathe.

The feed is obtained from a splined screw receiving motion from the gear wheels shown at each end of the lathe, the rod connecting them being at the back.

The form of tool rest employed is that shown in Figs. from 608 to 611, on pages from 174 to 176.

Fig. 1 (Plate XXVII.) represents a horizontal chucking machine, by the Brown & Sharpe Manufacturing Company, and having an automatic feed to the turret with eight changes of feed. The back gears are beneath the spindle cone and entirely enclosed. They run continuously, and are engaged or disengaged by a friction clutch whose construction is shown in Figs. 2 and 3. Fig. 3 gives a sectional view of the head stock.

Fast upon the cone spindle and between the cone C and the gear D is a flange piece X, carrying the small levers r, r', which, through the medium of the pins shown, operate the wedges S, S; S', S', which open out a ring which is in two halves, as shown at R,R, in Fig. 3. d is a sleeve, a sliding fit endways upon x, and having a recess c for receiving a clutch ring, a representing the clutch lever which is upon the shaft b. The sleeve d carries the pieces e, and in the position the parts occupy in the figure, e does not bear upon either the levers r nor the levers r', and the cone would revolve, without revolving the cone spindle.

But suppose lever a be operated to the left and ring d will be moved to the left, forcing inwards the end of levers r, r, which would force outwards the tongues S', S', and cause the two half rings to grip the bore of the cone at m, and drive it by friction, thus giving the cone spindle the belt or single gear speed.

Now suppose that instead of moving d to the left, it be moved to the right, and the pieces e, e, will engage with the levers r', r', forcing outward the pieces S, S (see Fig. 3), and causing the two halves of the ring R to grip the bore of the gear D and drive it by friction.

The springs s (Fig. 3) are merely to withdraw the two halves of the friction ring R when the levers r', r', are released from contact with pieces e, e.

A combination turret lathe, constructed by the Bridgeport Machine Tool Works, is illustrated in Figs. 1 and 2 of Plate XXVIII.

This machine has a hollow spindle, having a chuck at each end, and hence is capacitated for the operations usually performed by a screw machine, having a 2½-inch hole through the spindle, which has a chuck fitted at each end; a three-stepped cone for 4″ belt, the largest step 14 inches in diameter, with back gears proportioned 4½ to 1, and a 6-hole turret, with automatic or hand feed.

The back gears are thrown in or out of action by means of a friction clutch, which is operated by the lever shown on top of the main bearing, and by means of which the machine may be stopped, or the back gear thrown in or out without stopping.

The holes in the turret are 2½″ diameter, and the turret is hexagonal in shape, the object being to provide flat surfaces to which tool holders or other devices may be bolted, as is sometimes preferred.

The turret slide has a motion of 14″ in the block, with an adjustable trip for the automatic feed.

The feed mechanism is clearly shown in Fig. 2. The turret revolves automatically, as it is drawn back or not, as may be desired, the change being made by simply pushing in a small pin in front of the shoe.

Instead of the usual block with cut-off slide, a regular lathe carriage is provided, having an automatic feed along the bed, and an automatic cross-feed. An adjustable stop is provided, with which the carriage may be brought into contact when it is desired to bring it to the same position for a certain length upon each piece, and it may also be clamped in any desired position upon the ways, when the cross-feed is to be used.

There are also adjustable stops for limiting the motion of the cross-slide in either direction. The cross-slide carries two tool blocks, which may be adjusted to any desired distance from each other. The motion of the feeds is reversed by means of the bevel gears and double-ended clutch, shown in front under the cone pulley. The clutch is operated by the handle above.

An unusual feature for machines of this class is seen in the provision made for turning tapers, which is done by means of a Slate taper attachment, shown by the rear view, Fig. 2, which also

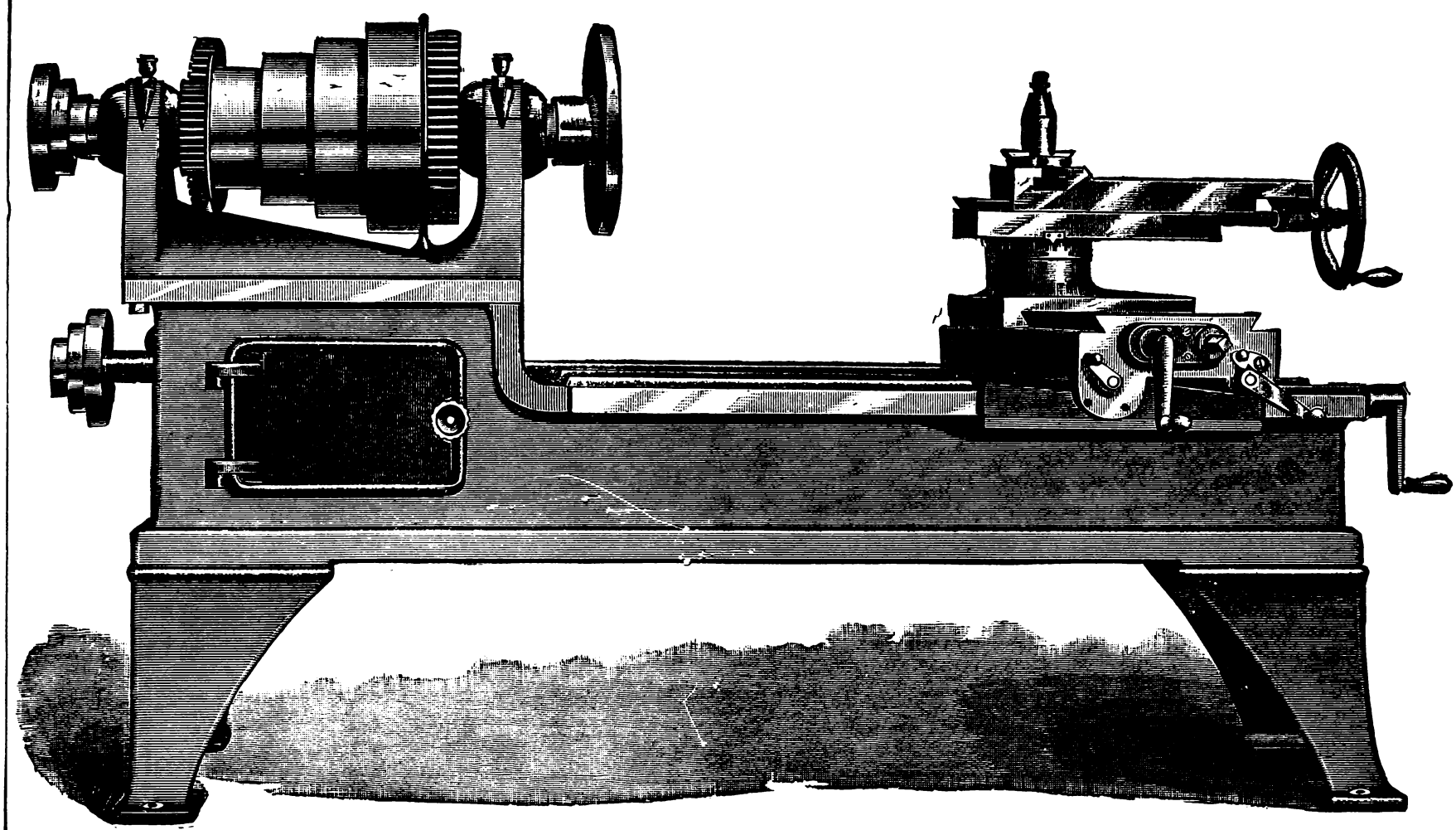

Fig. 1.

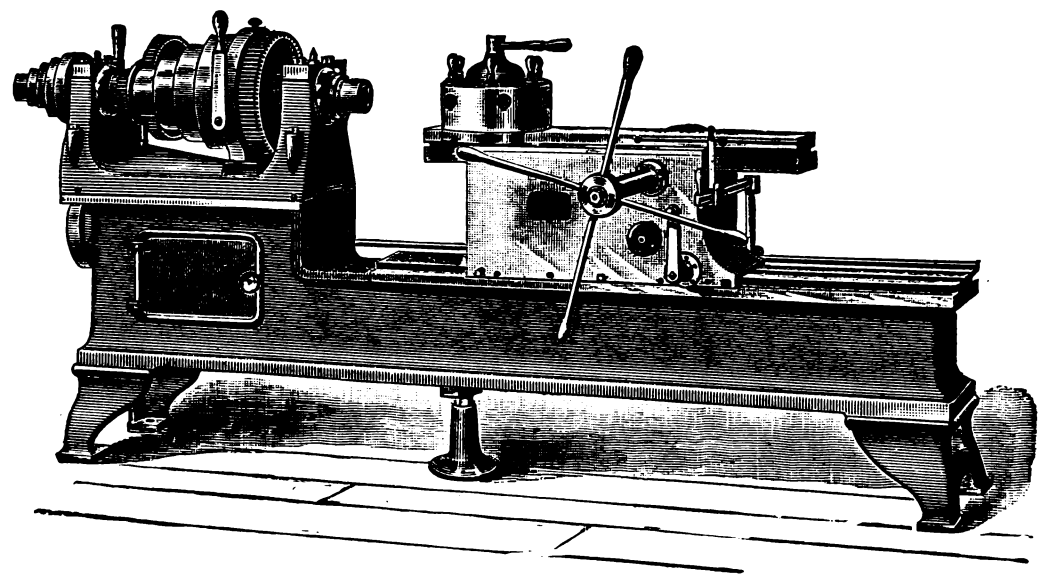

Fig. 2.

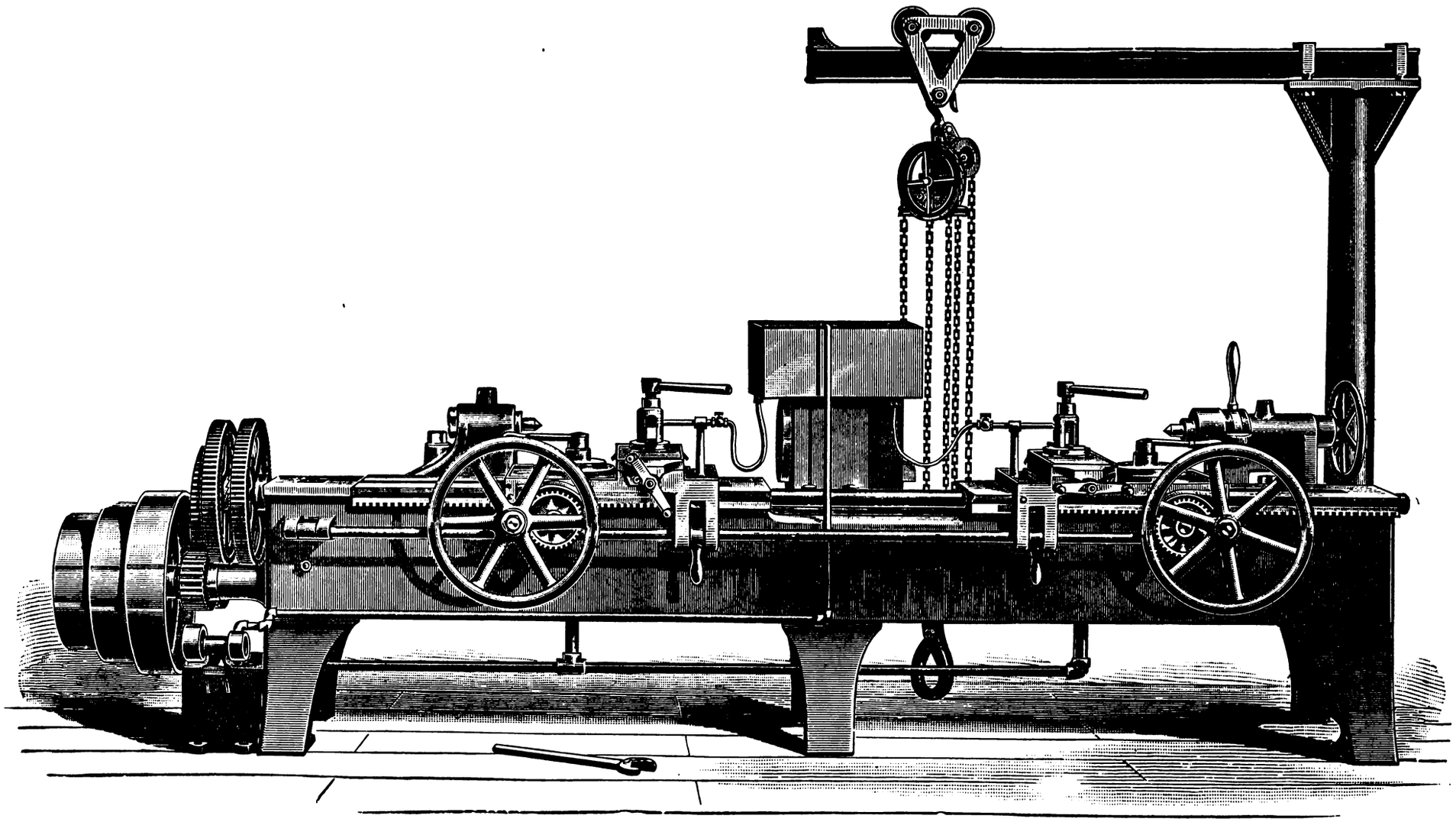

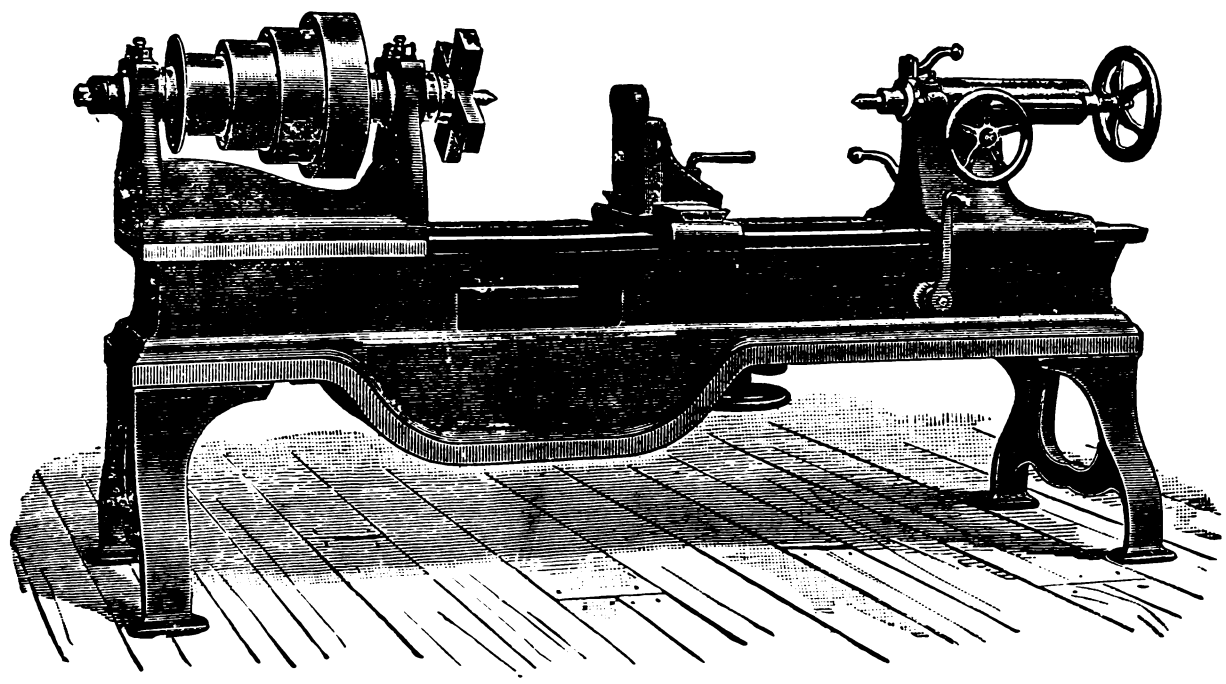

Fig. 1.

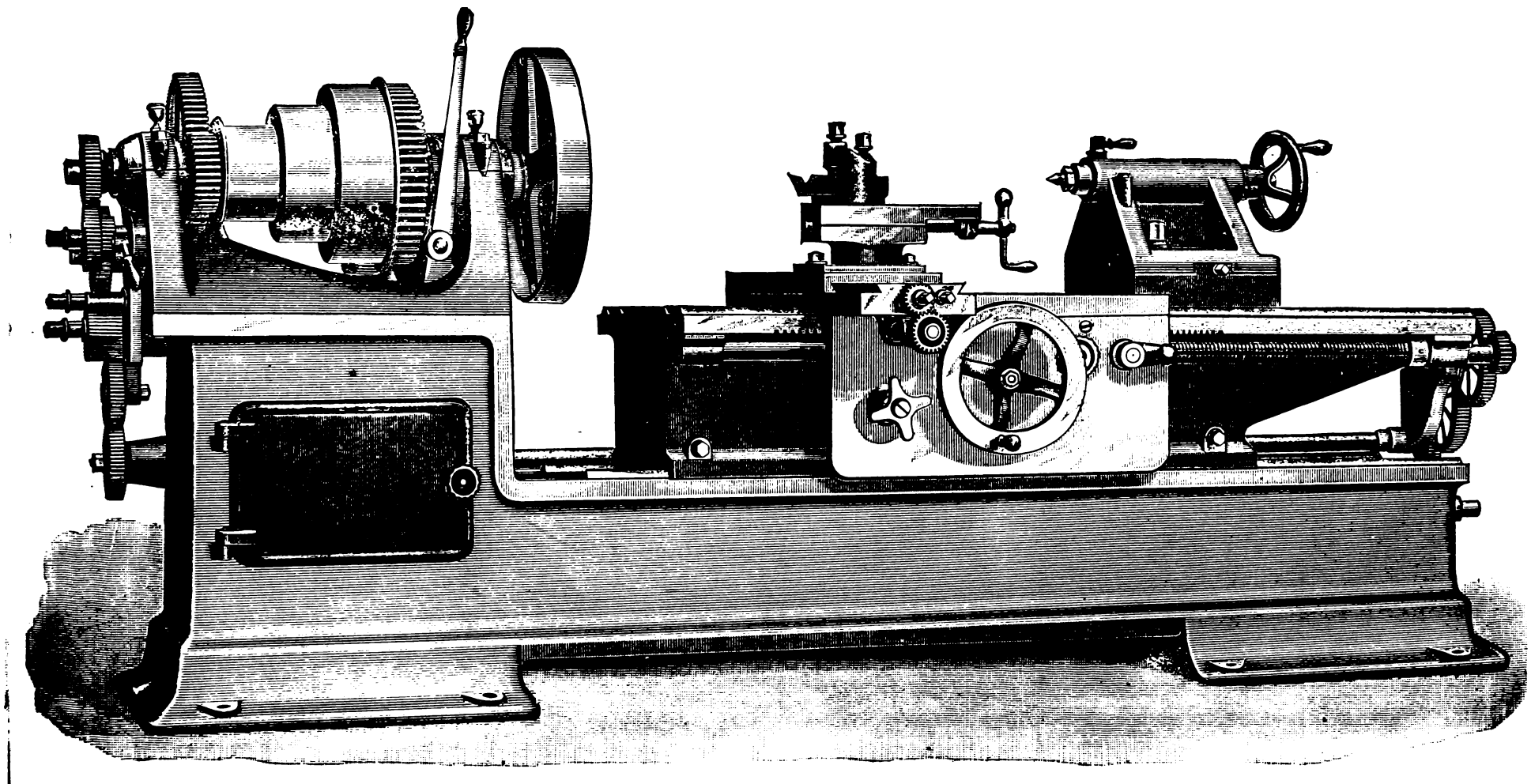

Fig. 2.

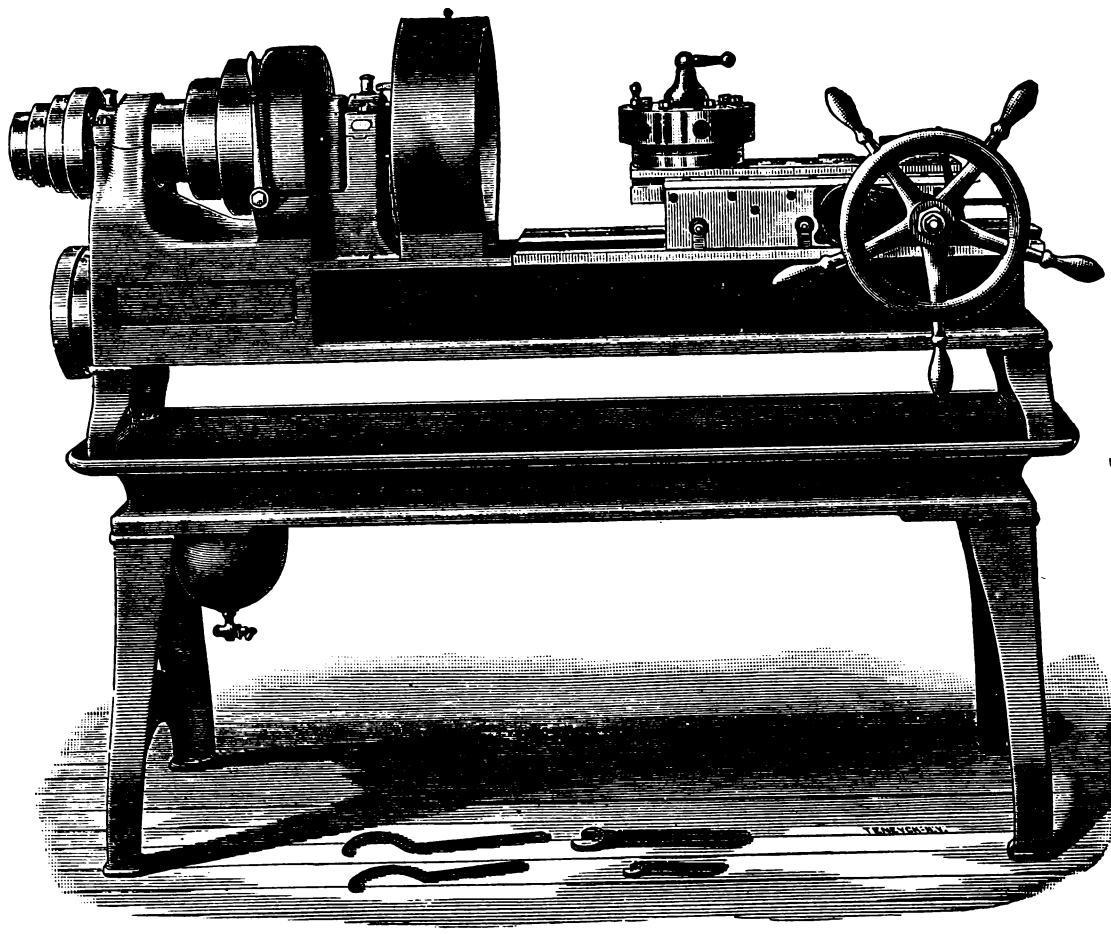

Fig. 1.

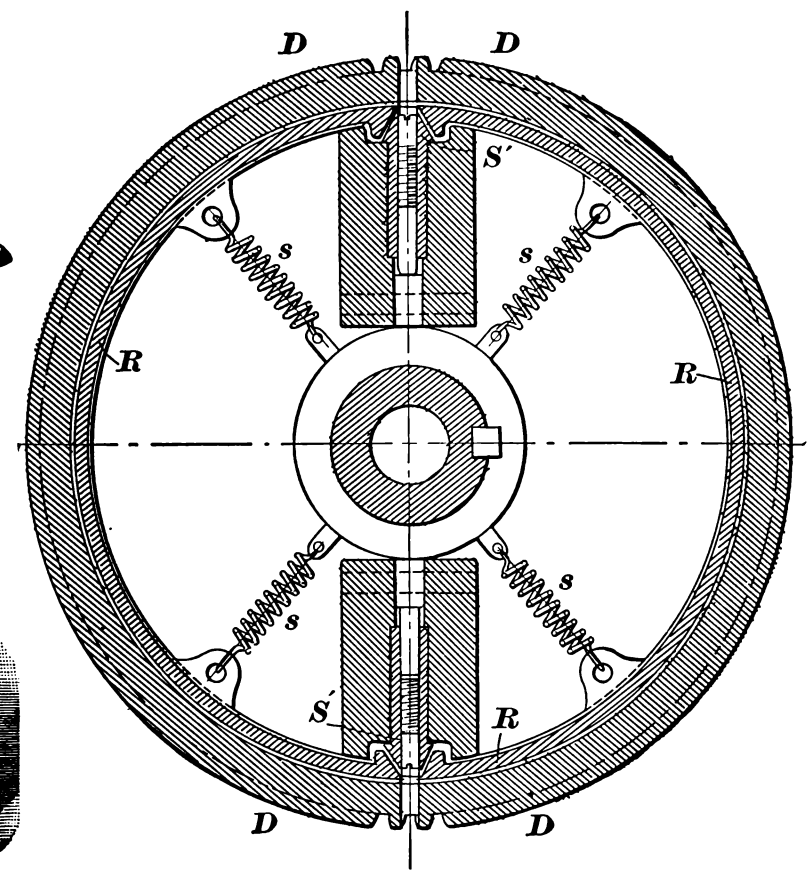

Section A B.

Fig. 3.

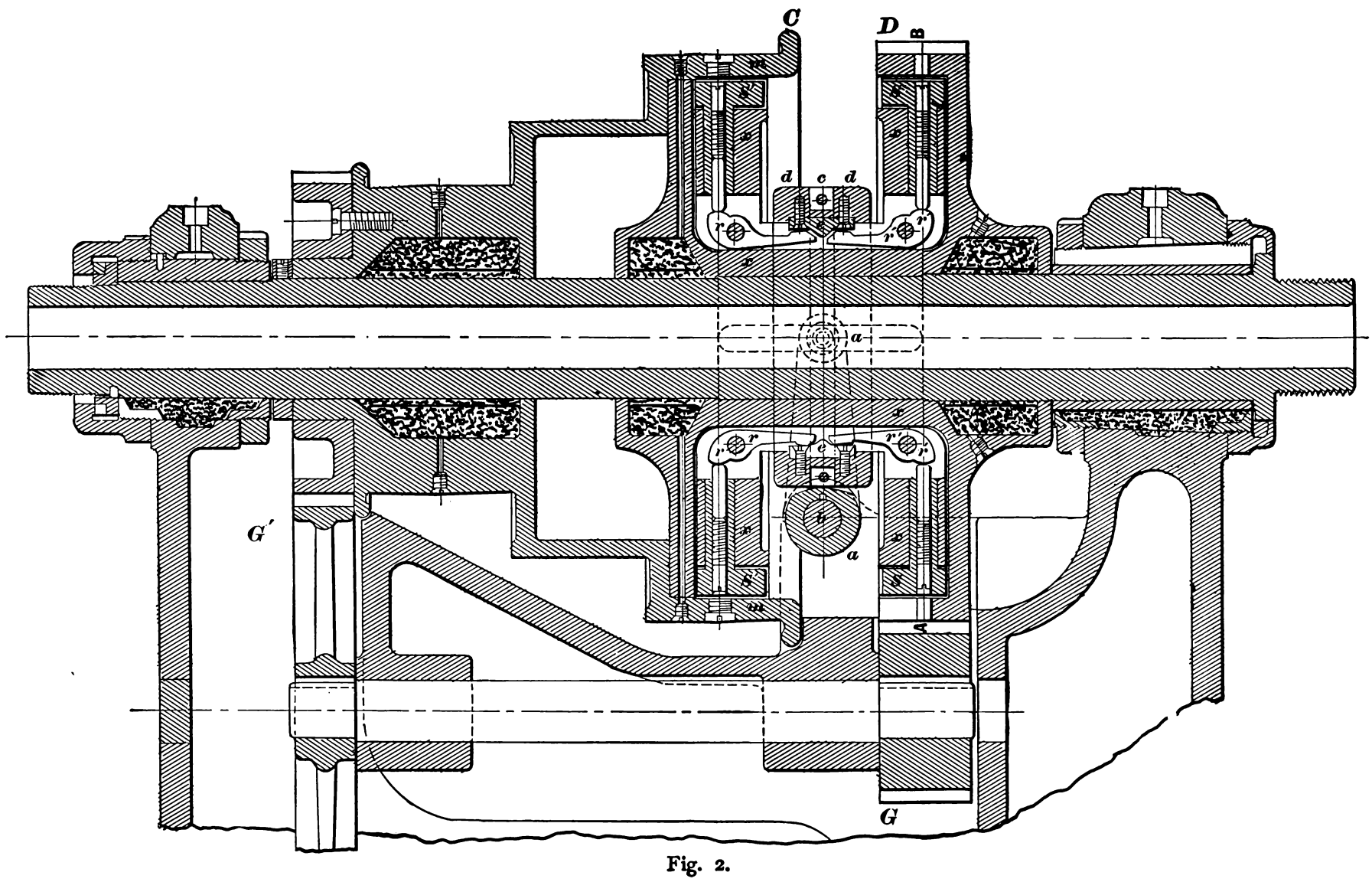

Fig. 2.

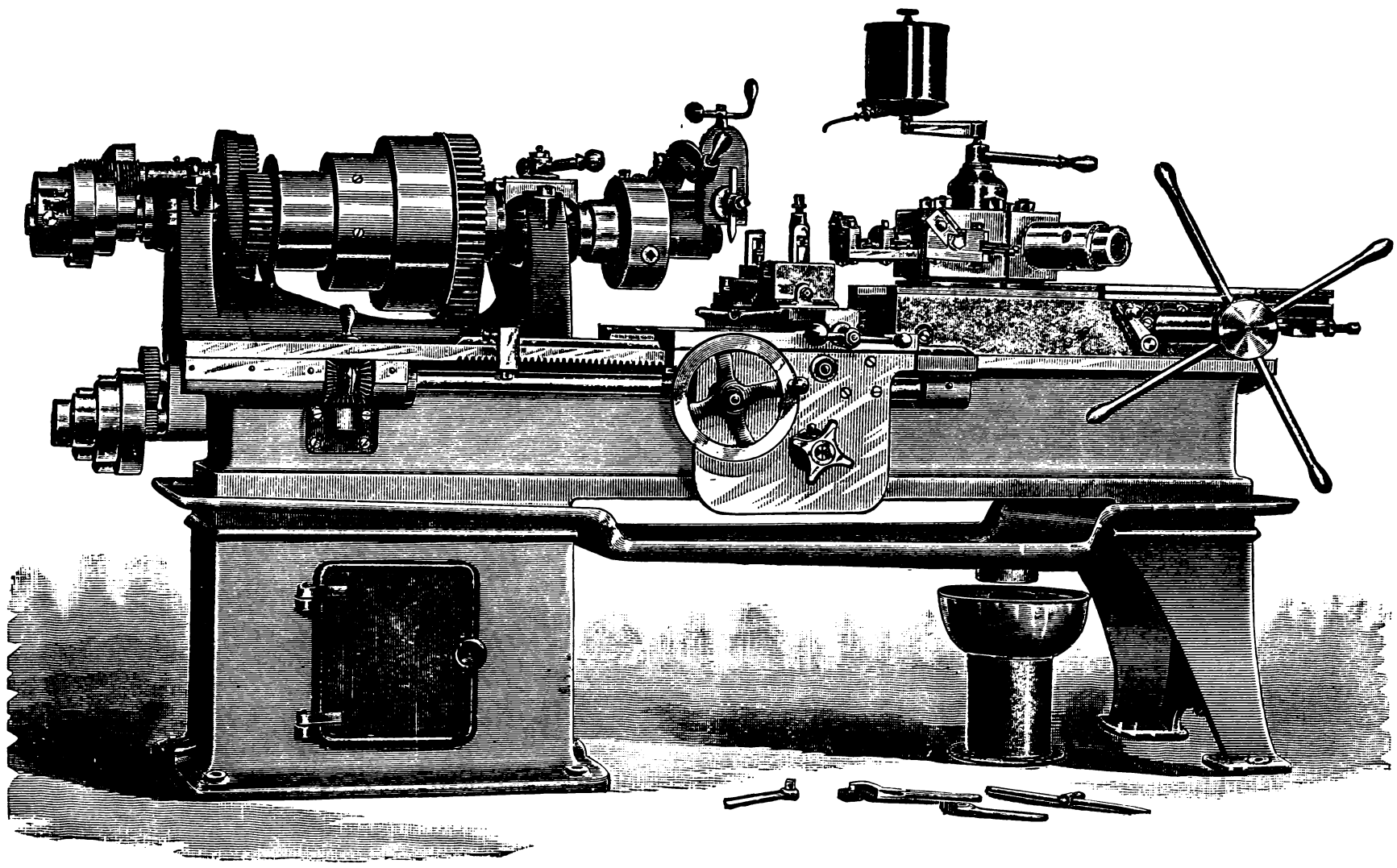

Fig. 1.

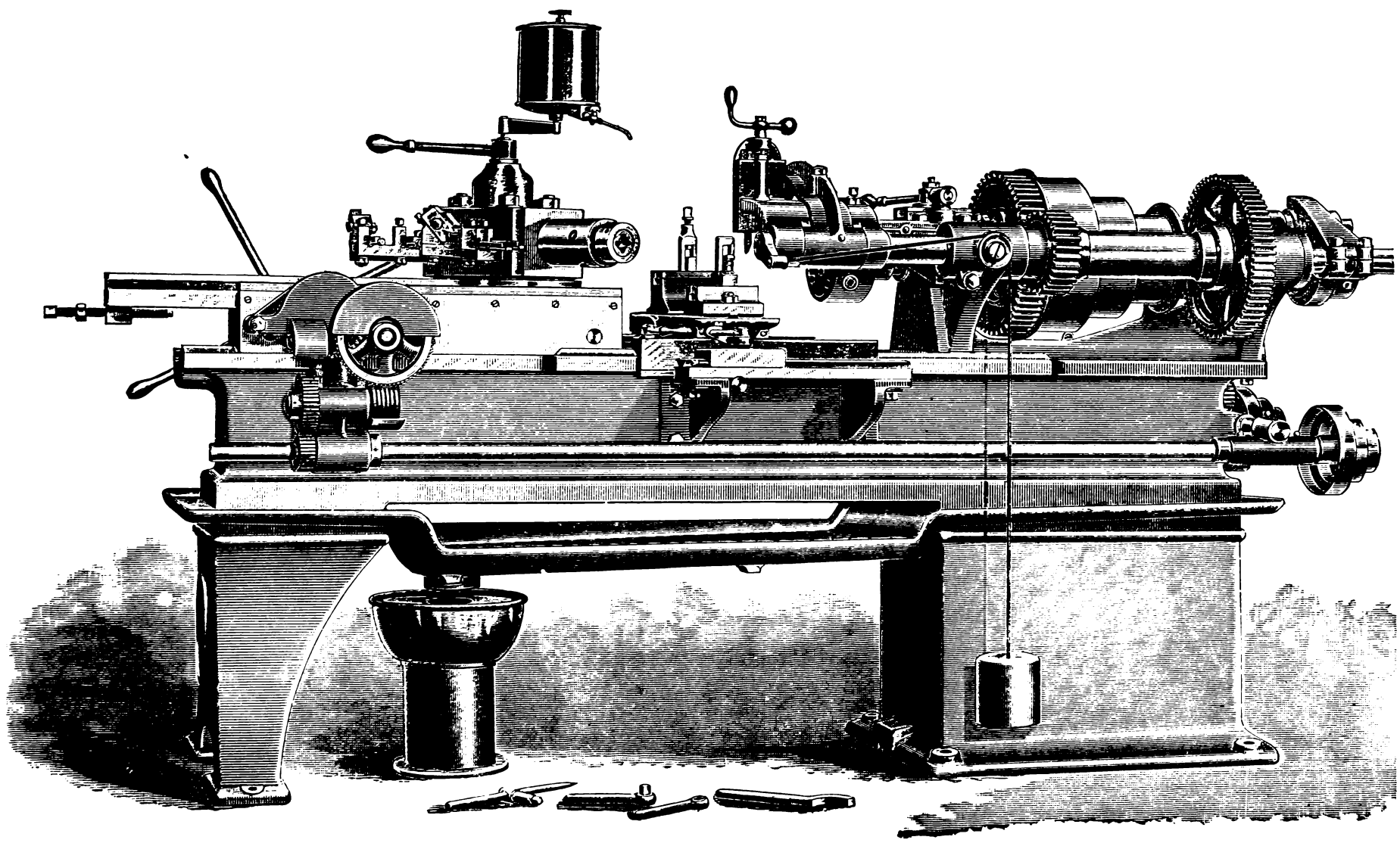

Fig. 2.

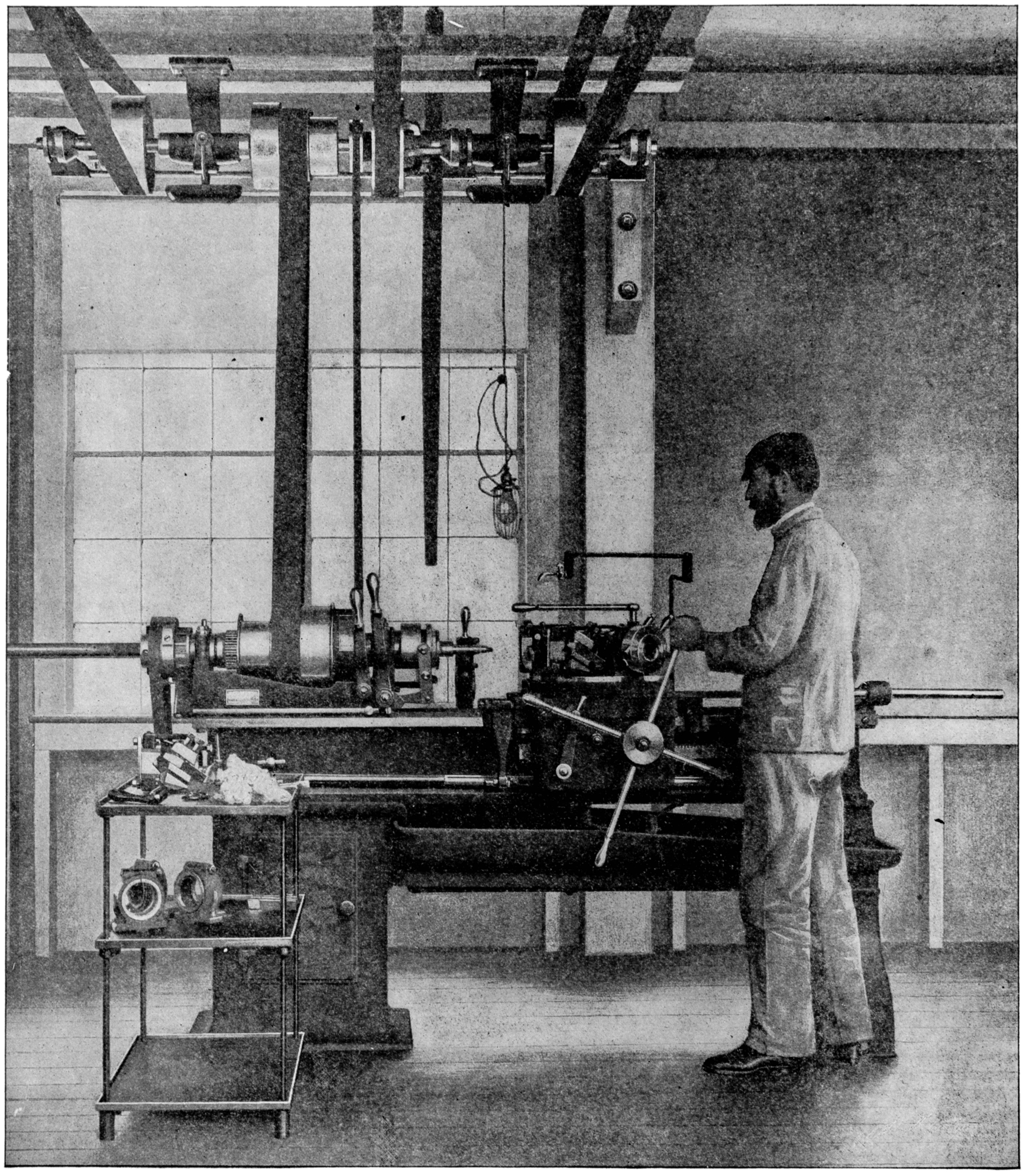

Fig. 1.

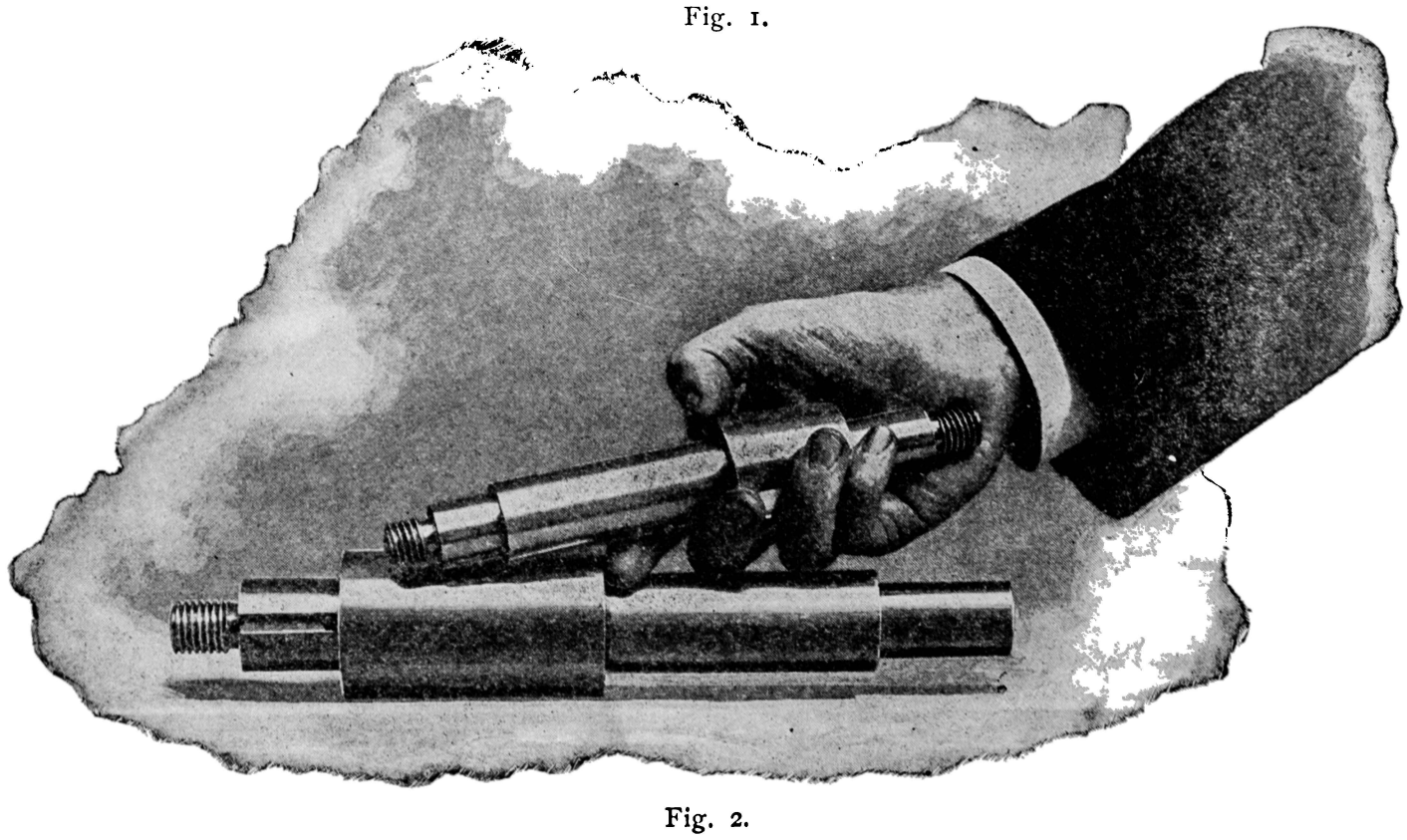

Fig. 2.

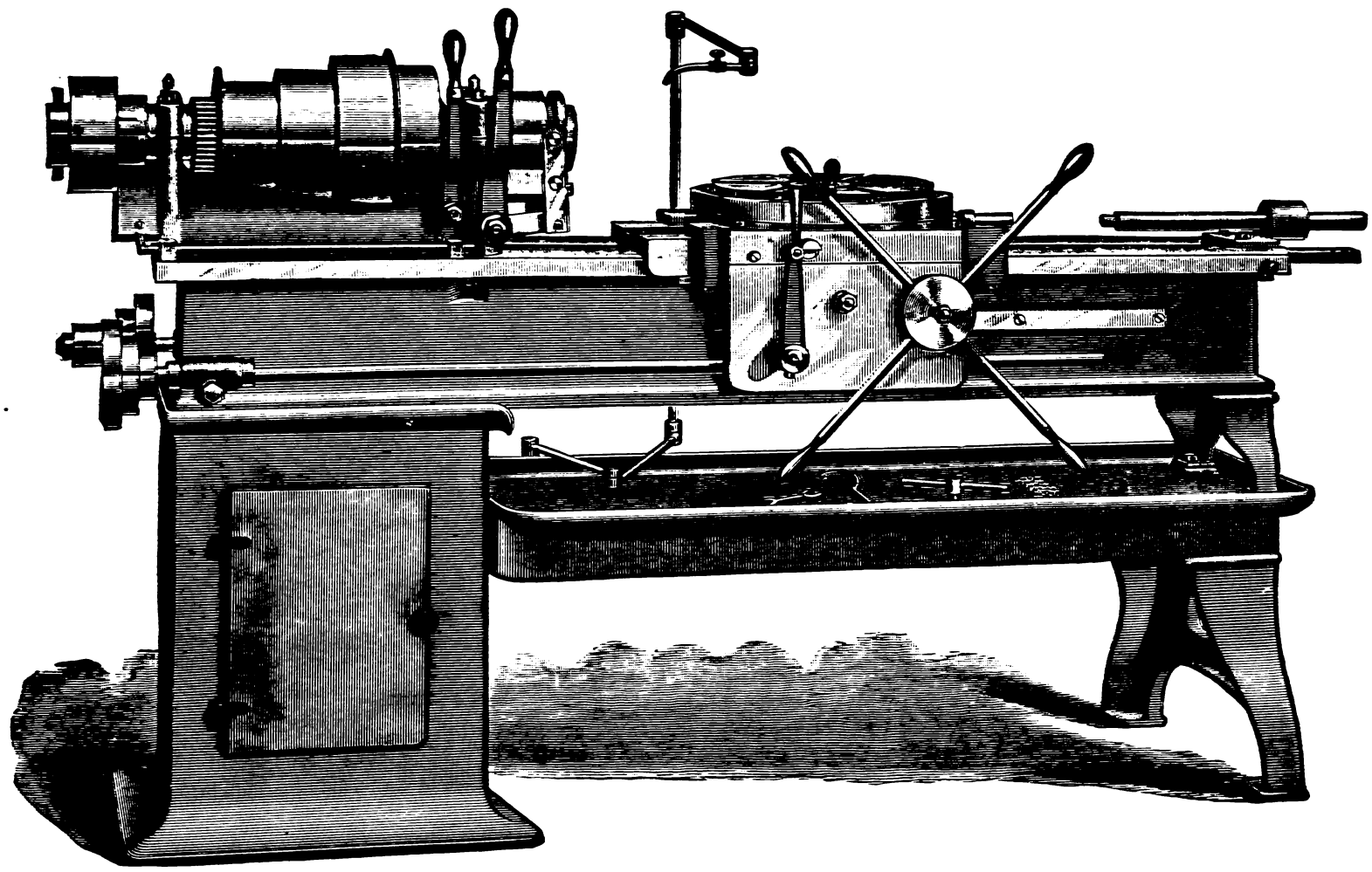

Fig. 3.—The 2 x 24 Flat Turret Lathe.—Front View.

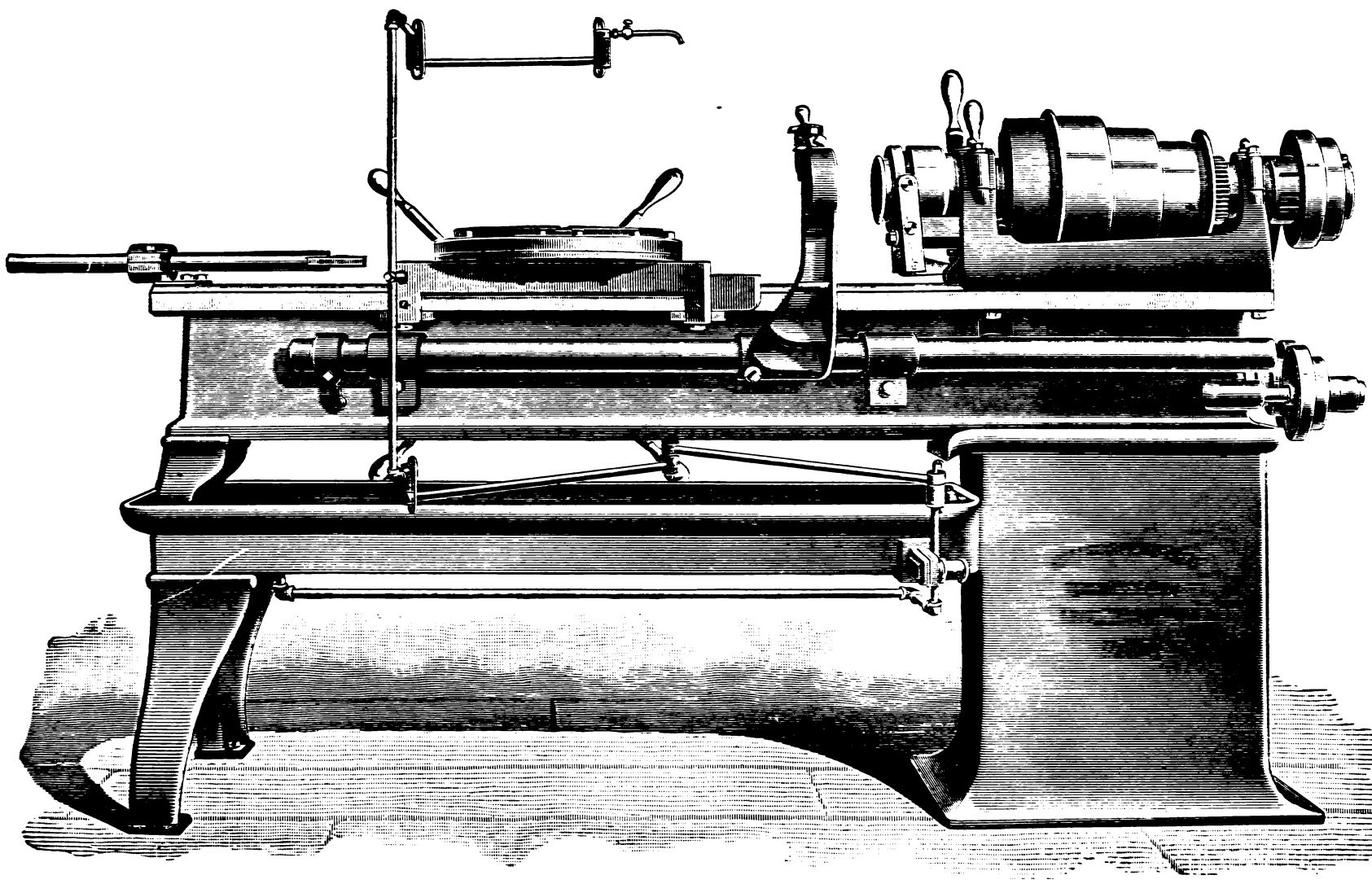

Fig. 4.—The 2 x 24 Flat Turret Lathe.—Back View.

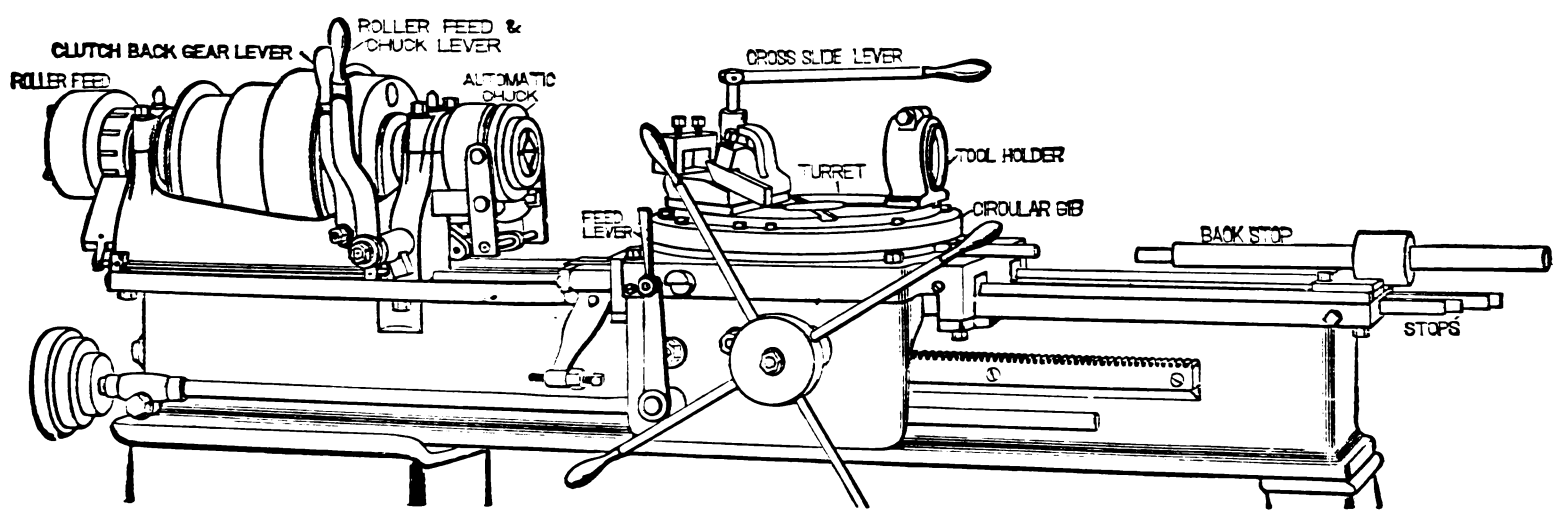

Fig. 5.

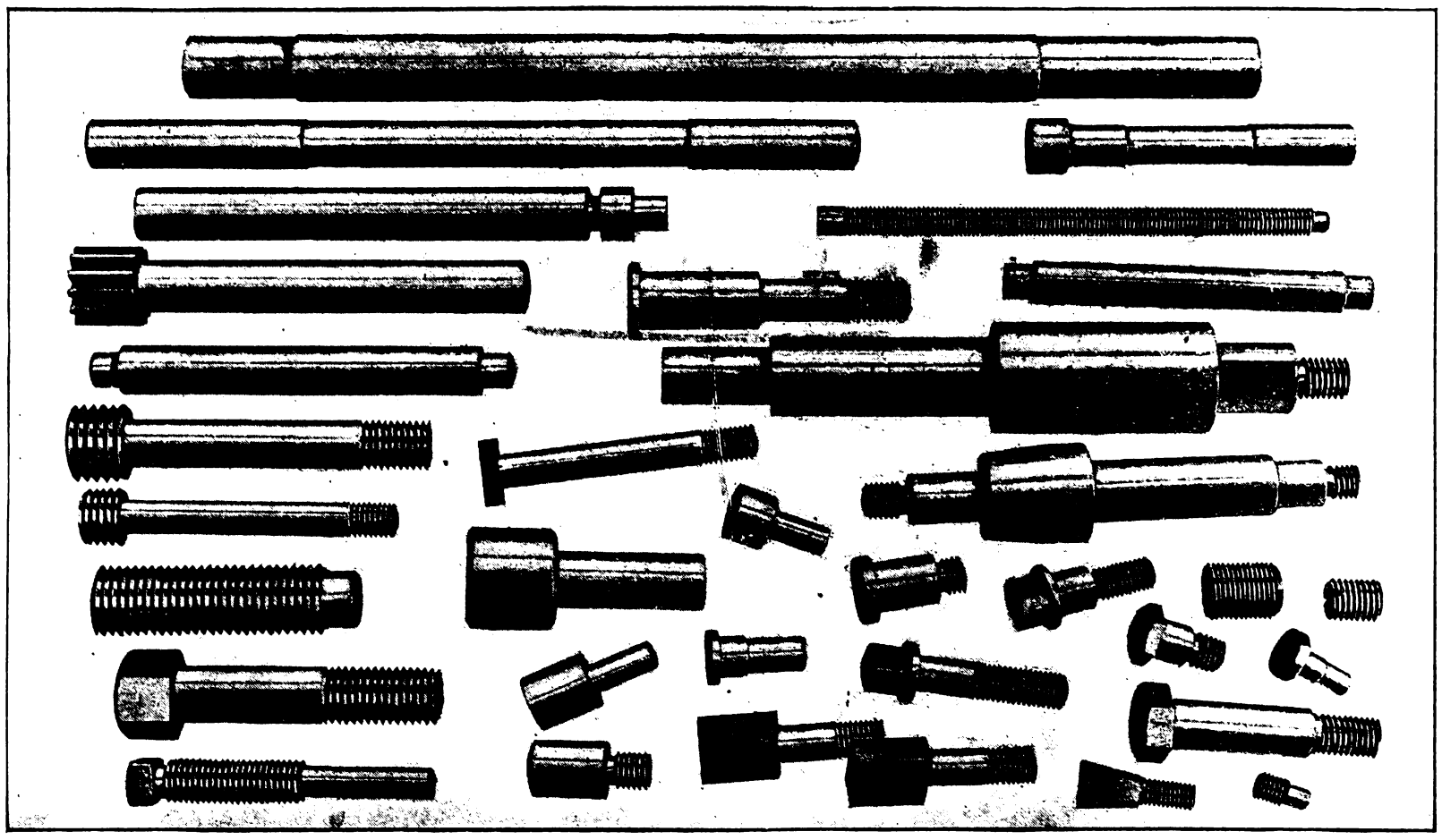

Fig. 1.

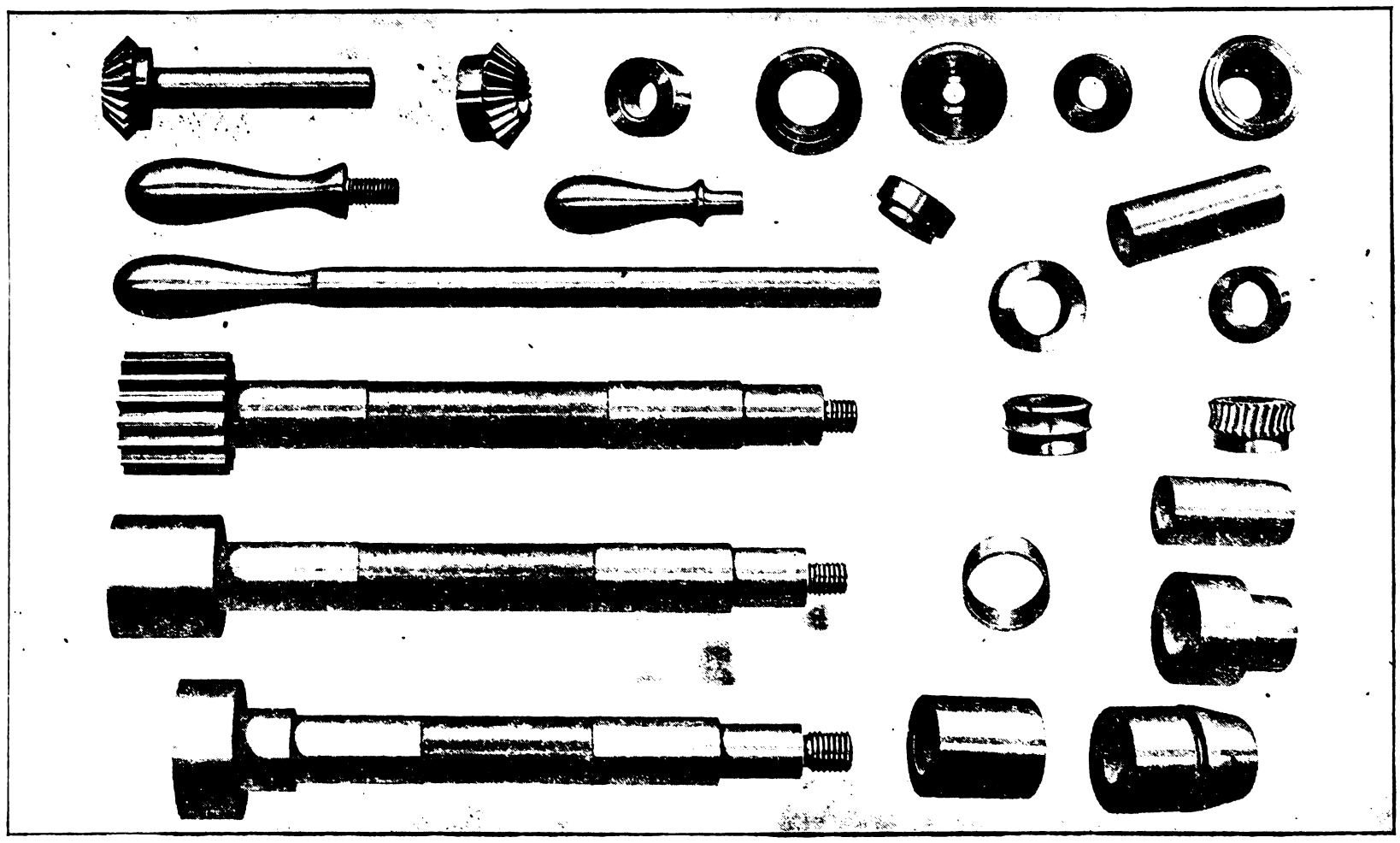

Fig. 2.

shows the arrangement of the chasing bar, which is, perhaps, the most novel feature of the machine.

Into the brackets which support the back gear are fixed two sleeves or thimbles, which project inside the bracket, each toward the other. They enter the ends of the back gear quill, which is enlarged for the purpose, the two forming the bearings for the back gear. Through these sleeves passes the chasing bar. The stud, upon which is placed the chasing hob, runs at half the speed of the main spindle, which gives an opportunity for the employment of coarse, and, consequently, durable threads, which are made of the buttress or ratchet form. The arm which carries the nut is adjustable upon the bar, and is clamped by the two bolts, as shown.

To the other end of the chasing bar are fitted two castings, one of which is the hand lever for operating the bar, to which it is keyed fast. The other piece has two bearings upon the bar, one each side of the lever, under which it passes, and is provided at one side with the chasing tool slide rest. This piece is not keyed fast to the chasing bar, but is made to turn freely upon it, being, however, secured to the hand lever by the single bolt seen passing down through a boss in the centre of the lever. The bolt passes freely through the lever, and is tapped into the lower casting. Around the body of this bolt is a spiral spring, which tends to force the two pieces apart ; and when the bolt is slacked it does so to any extent desired.

Underneath the lower casting is a guide bar, upon the upper edge of which it may be made to rest, and which may be inclined either way to any desired amount. Supposing the bolt to be slacked and the spring to have the two pieces separated a short distance, the bar may be swung over by the lever, until the piece carrying the tool rest is in contact with the guide bar. A further depression of the lever does not lower the tool, but compresses the spring, and, at the same time, brings the nut into contact with the hob ; then, as the bar moves along, the spring extends and keeps the lower piece down upon the guide, which, as above said, may be set at any desired inclination.

A turret machine, or what is termed by its makers, the Jones & Lamson Machine Company, a 2-by-24 flat turret lathe—meaning that the machine will operate upon work 2 inches in diameter and 24 inches long—is shown in the following illustrations :

Figs. 1, Plate XXVIII.–A., and 3, 4, and 5, Plate XXIX., are various views of the lathe, whose method of operation differs from other machines of its class in that the first cut taken over long, slender work begins at the chuck end, where the work is held stiffly, the feed traversing towards the free end of the work ; and to accomplish this purpose the tools are provided with a quick opening and closing movement.

The construction differs principally in the use of a revolving tool holder in the form of a turntable, and is commonly called a flat turret, instead of an ordinary cylindrical turret, and this permits a quicker starting and stopping than is attainable in a large high turret. This plate is held down by a gib at the outer edge, and it is provided with an indexing mechanism, which will turn it automatically to 3, 4, 5, or 6, placed according to the number of tools used.

A large locking pin E, Fig. 2, Plate XXXI.–A., is located directly under the work, and insures a perfect return of the plate to its correct position.

The carriage is gibbed at the outside securely to the bed, and it rides on two 90-degree V's of large area, as seen in Fig. 5, Plate XXXIII.

The cutting tools are bolted to the top of the plate, or table, and as it revolves, each tool is brought in line with its work. From this construction, it will be seen that overhang of the tools and of the turret slide is eliminated.

The turning tools are provided with backward rests ; these rests may be set to precede or to follow the cutter. The first chip over rough work must be taken with the cutter in advance of the rest, but after the work is turned true the rest may precede the cutter.

Long, slender work cannot be turned true by beginning at the end, on account of its springing away from the tool before the rest reaches it ; for this reason the first cut is started at a point near the chuck and runs toward the end away from the chuck.

The cutter, which is held rigidly in a pivoted block, is fed into the work by a lever, the ball end of which appears directly over the turner, Fig. 1, Plate XXXV. At the left of each turner is seen the latch, which is held in position by its two adjusting screws. This latch controls the position of the back rests. The lever serves as a means for feeding the tool when the cut is started near the chuck ; after sufficient length has been turned the back rest is pushed into position by the latch. This may be done while the lathe is running and after the feed has been thrown in, but it must be done before the tool has reached a part of the work that springs away from the tool.

In most cases, one cut taken as above will produce a straight surface that runs true, but in some extreme cases it may be necessary to take a second cut in the same way.

After the stock has been turned true, the back rest is set in advance of the tool, and the cut is taken from the end toward the chuck. When the work is short, all cuts may be taken from the end and toward the chuck with the cutter in advance.

The spindle, Fig. 1, Plate XXXI., of the machine is hollow, and is provided with automatic chuck at one end, and a revolving roller feed at the other. The chuck shown in Figs. 1, 2, and 3, Plate XXXIII., grips the rough bar of work, which passes through the roller feed and spindle. The roller feed pushes the stock through the spindle and chuck when the chuck is opened. One

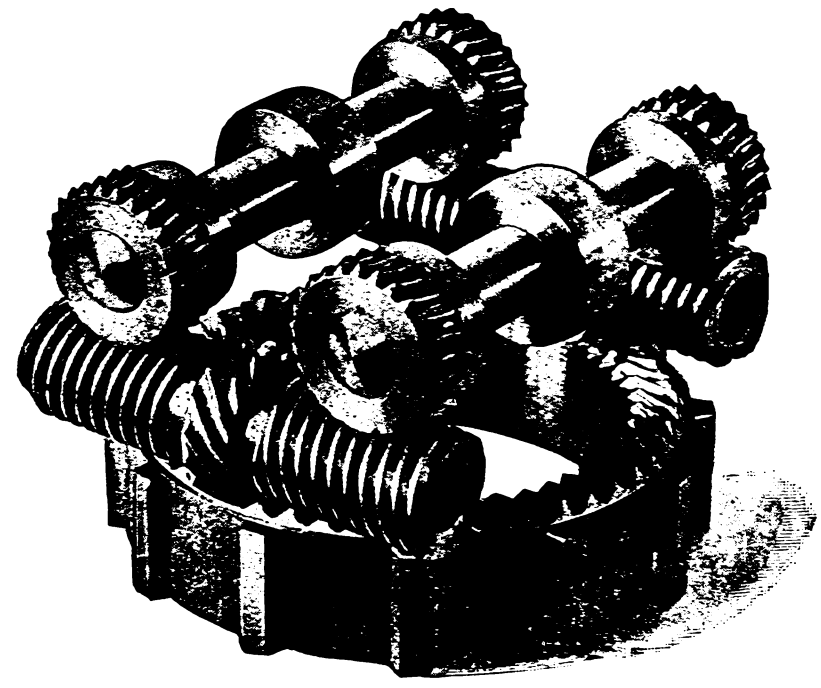

lever operates the chuck and the roller feed at the same time, and may be operated while the lathe is running.

The automatic chuck consists of a main body *g*, Figs. 2, and 7, Plate XXXIII., which is screwed on to the spindle, and adapted to receive conical shaped jaws *d*. These jaws are forced into the tapering hole in the main body by an inside lip on sleeve *c*, Figs. 3 and 8, Plate XXXIII., which passes over the body part. This sleeve is given a slight longitudinal motion which forcibly draws the jaws into the body. The means for giving this sleeve this slight but positive motion consists of struts *a*, which pivot in the main body, and swing against the collar *b* on the sleeve *c*. These struts are caused to swing in against said sleeve by an outer sleeve *e*, Fig. 6. This outer sleeve is bell-mouthed and is forced over the loose ends of the struts, and as it forces them to swing in, they strike against the collar on the inner sleeve, and thus the inner sleeve is given that slight but positive longitudinal motion which forces the collar jaws into the tapering hole and consequently on to the work.

The lever for operating the outer sleeve is connected to the sleeve by a toggle joint which gives great leverage. The chuck receives a bar as large as can be passed through the spindle, and the jaws can be used on square, round, or hexagon bars.

When the chuck is used for holding hexagon bars, one of the four sections is removed, and the remaining three are separated by spacing pieces so that they take bearing on the flat surface of the bar at three equi-distant places.

The jaws can be removed and exchanged without removing the sleeve, the adjusting collar being screwed back as far as it will go, and the jaws removed in sections.

On the spindle at the outer end the revolving roller feed is mounted. This feed is operated by the same lever that operates the chuck. When the chuck is opened, the feed is set in motion, and it causes the bar of stock to pass through the chuck until it strikes a swinging stop which is pivoted to the carriage at the front of the turret, which determines the length of the piece. This swinging stop is shown in position in Fig. 4, Plate XXIX., and swung down out of operating position in Fig. 5, Plate XXIX. It is used when the turret is at its extreme backward point of travel, hence it does not use one of the forward stops of the turret, which it leaves free for other tools. Motion is given to the rolls by gearing, which consists of an idler gear on the spindle, which might be called a face tangent, since it is not a scroll. This gear drives two tangent pinions of 16 pitch, 15 teeth, and $4\frac{1}{8}$ (screw) pitch. The face tangent has 50 teeth, and is loose on the spindle. When the chuck is opened the gear is stopped by a pin engaging with ratchet teeth on its periphery. This gives motion to the tangent pinions, which in turn drive two worms; these worms drive the worm wheels which are on the shafts that carry the rolls, and the rolls bear upon the bar of work and push it through the spindle and chuck.

The efficiency of this feed is the more pronounced in proportion as the bar from which the work is made is heavier, in which case feeds actuated by a weight cause the bar to strike too heavy a blow, while the ratchet feeds, requiring an extra tube to pass through the lathe spindle, obviously reduce its work-holding capacity.

The back gear is under the cone spindle, runs free, and is not keyed as usual.

The large gear and cone on the spindle of the lathe are connected by friction clutches, which are operated by a sliding sleeve and struts similar to those used in the automatic chuck above described.

An auxiliary back gear, commonly called triple back gear, lies directly below the regular back gear. It is operated by a handle projecting out through a hole in the bed directly below the small step of the cone.

The regular gear gives the cone a ratio of about 4 to 1 to the spindle, and the triple gear, when used, increases that ratio to 16 to 1.

The clutch back gear lever, shown in Fig. 5, Plate XXIX., is connected to sliding sleeve *m* by drum *m'* and crank *m''*, Fig. 1, Plate XXXI.

Collar *l* is keyed to the spindle, also secured against end motion by screw points. Struts *l'* enter slots in collar *l*, and project out into notches cut in friction collars *k* and *n'*. These friction collars are thus rotatively connected to the spindle.

Sliding sleeve *m*, as shown in the drawing, is over to the extreme left, and has forced friction collar *n'* into the taper seat of cone *n*, thus locking the cone to the spindle. Forcing the sliding sleeve *m* to the other extreme would connect the gear to the spindle and release the cone.

Means for operating the triple gear consist of an eccentric casting having a cam surface engaging in the sliding clutch sleeve P'. By turning casting P''', the eccentricity of the triple-gear bearing to the main bearing of the casting at *r* and *r'* draws the gears *q* and *q'* out of their mating gears, and the cam surface engaging sliding collar P causes the clutch teeth of P' to engage with the clutch teeth of *o*; and since *o* and *o'* are keyed together, this operation connects the large back gear rotatively to the shaft P.

The spindle boxes are of the round pattern. The top half of each box is held by a cap which is fitted over two hollow posts which are firmly driven into the main casting; these posts hold the cap against side and end thrust, so that the top half of the box is practically as firm as the lower. The cap bolts pass through these posts and tap into the main casting.

The mechanism for turning the turret, and locking it at the different positions, is shown in Fig. 1, Plate XXXI.–A., in which A represents the turret; B the pinion, which is connected to the turret by a ratchet which permits it to revolve freely on the hub of the turret in one direction. C represents a rack engaging with the pinion; E is the locking pin. It is drawn by lever D. This lever is depressed by the dog C' on the end of rack C, and shows the pin withdrawn.

While the carriage is being moved to the back end of its travel, a projection H, Fig. 2, Plate XXXI.–A., on the bed arrests the motion of the rack, and as long as the carriage continues to move back, the rack is forced in. At the beginning of the rack's stroke the pin E is drawn. The pinion begins to turn as soon as the rack is moved, but since the pawls engaging the ratchet teeth are some distance back from the tooth at first, there is distance enough allowed to fully draw the locking pin before the ratchet teeth come in contact with the engaging pawls. As soon as the teeth and pawls meet, the motion of the pinion is communicated to the turret, and it is caused to revolve.

When the locking pin is drawn, a latch hooks over the lever that draws it, and holds the lever down; thus it prevents the pin returning. This latch is disengaged by projections on the turret at the proper time. These projections are adjustable screws, which may be removed from contact with the latch, and thus permit the turret's turning beyond any unused position.

The power feed for the turret carriage is thrown out of gear at any desired point for each position of the turret. For instance, if one of the tools on the turret must travel the whole length of a piece 15 inches long, and another has a cut of only 2 inches, and so on, each tool will travel the length of its own cut only, and not the length of the longest cut. The mechanism for accomplishing the above result is contained in the carriage, and in the top of the bed.

Six adjustable stops N are located in the top of the bed. These stops are flat bars, and each has a notch on the top edge near the inner end. Six pawls F are pivoted to the carriage directly above the stops. These pawls are free on the pivot, and when not held up fall down on to the tops of the stops.

Each pawl is provided with a finger *f*, which bears on the periphery of the turret. Now in this periphery there are six notches which are so located that, when the turret is in a certain position, a certain notch will be opposite a certain finger, so that each position of the turret has a separate stop.

The positions of the turret are marked 1, 2, 3, etc., and the stops are also marked in the same way.

The connection of these stops to the power feed trip R is through stud P, which is mounted on a sliding bar G. This bar is so connected to the stud P that its motion oscillates the stud. Turning this stud disengages the feed lever. It will be seen that when the forward motion of the pawl is arrested by the engaging with the notched stop bar, the slide bar G is also arrested; and as the feed still carries forward the carriage, the oscillating stud is moved enough to turn its edge away from R, which releases the feed worm from its gear.

The carriage slides on two Vs as usual, but only one V controls it against side thrust. Four steel shoes, *a* and *b*, Fig. 5, Plate XXXIII., form the bearing of the carriage E on the Vs. The shoes *a*, that take bearing on the front V, are clamped securely to the carriage saddle, while the shoes *b*, on the back V, are loose laterally, as the saddle casting rests on the top, and does not touch the sides. The front shoes are clamped against a flat surface that is perpendicular to that on which the back shoe gets its bearing. Screws *c*, of fine pitch and large diameter, take the down thrust on the tops of the shoes on the turret Vs. These screws serve as an adjustment or compensation for the twist existing in saddle E casting.

On account of the unevenness of floors of workshops, the bed is mounted on a three-point bearing. (See Plate XXXIV.)

This bearing reduces the deflection, and eliminates a variation of the deflection in addition to serving the primary purpose of a tripod bearing, and of preventing the twisting of the bed caused by the unevenness of the floor. The head end of the bed bears on rocking points on the top of the pedestal leg. At this end the bed has two bearings, one on each side, and, as shown, these points are not at the extreme end of the bed, but are at a point nearly under the front end of the head. This shortens the dis-

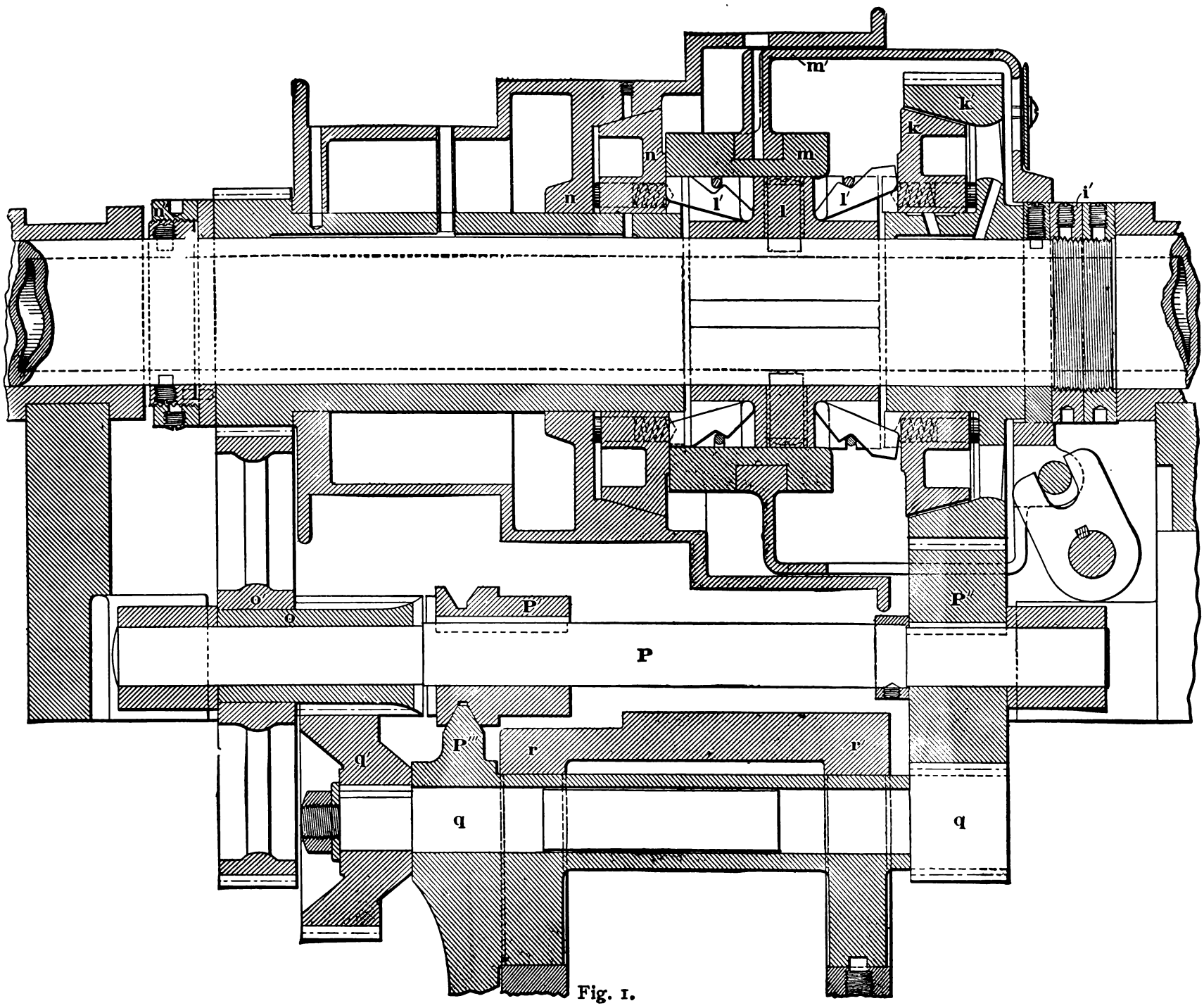

Fig. 1.

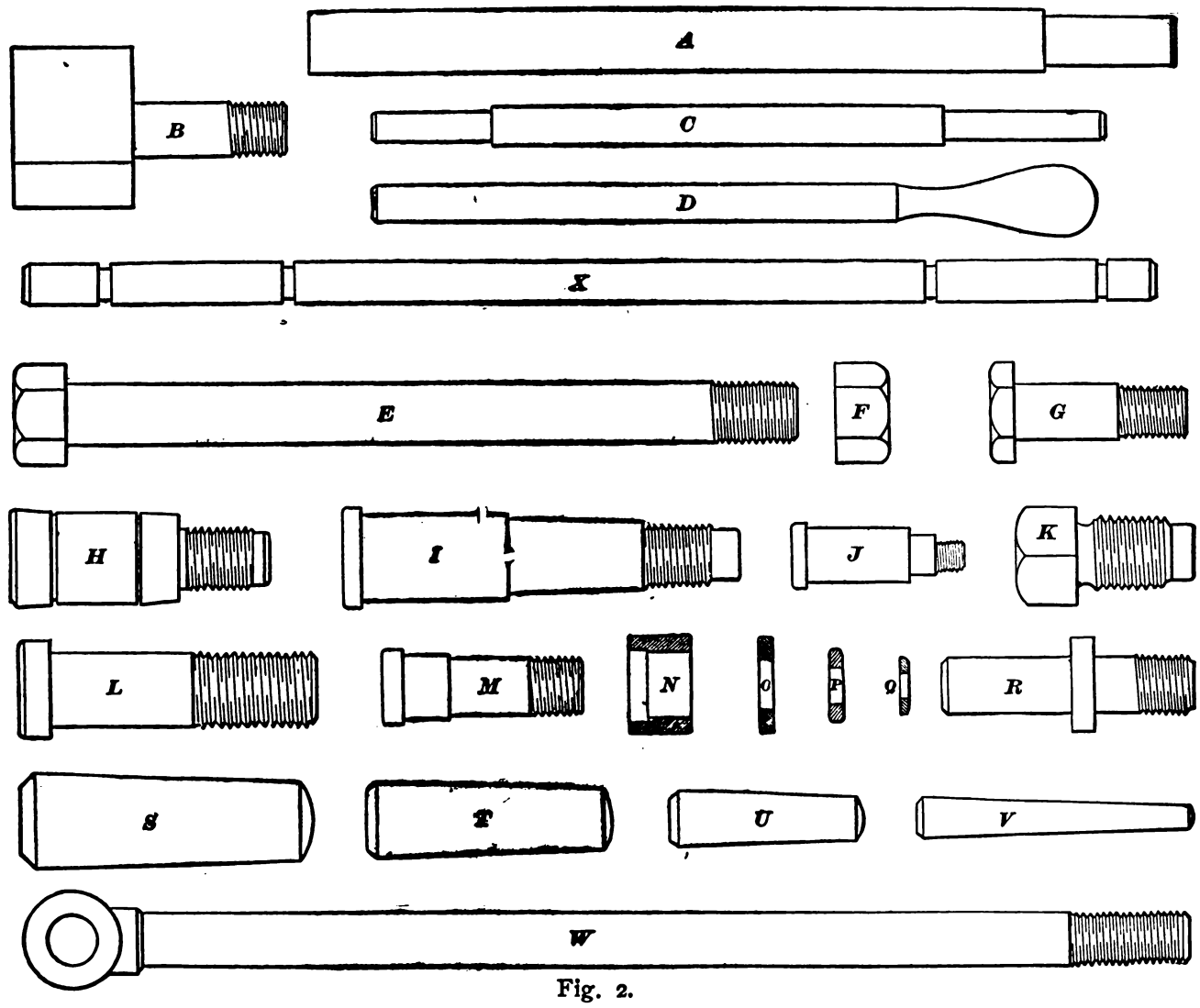

Fig. 2.

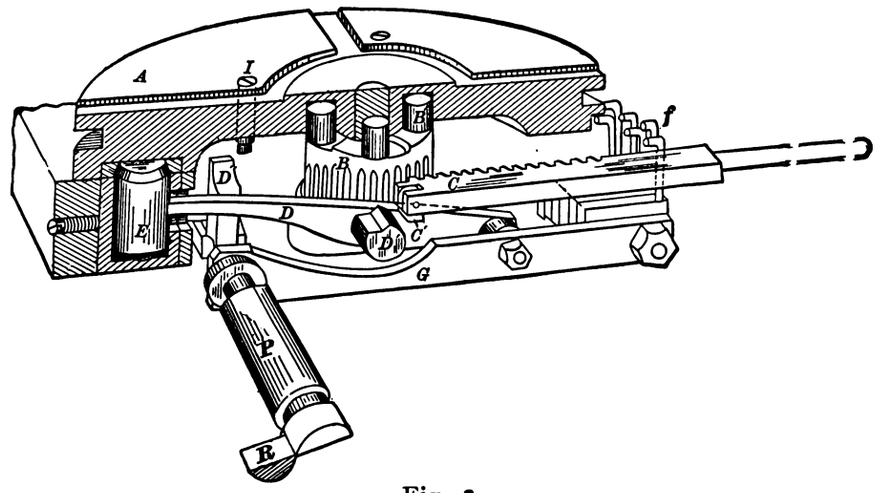

Fig. 1.

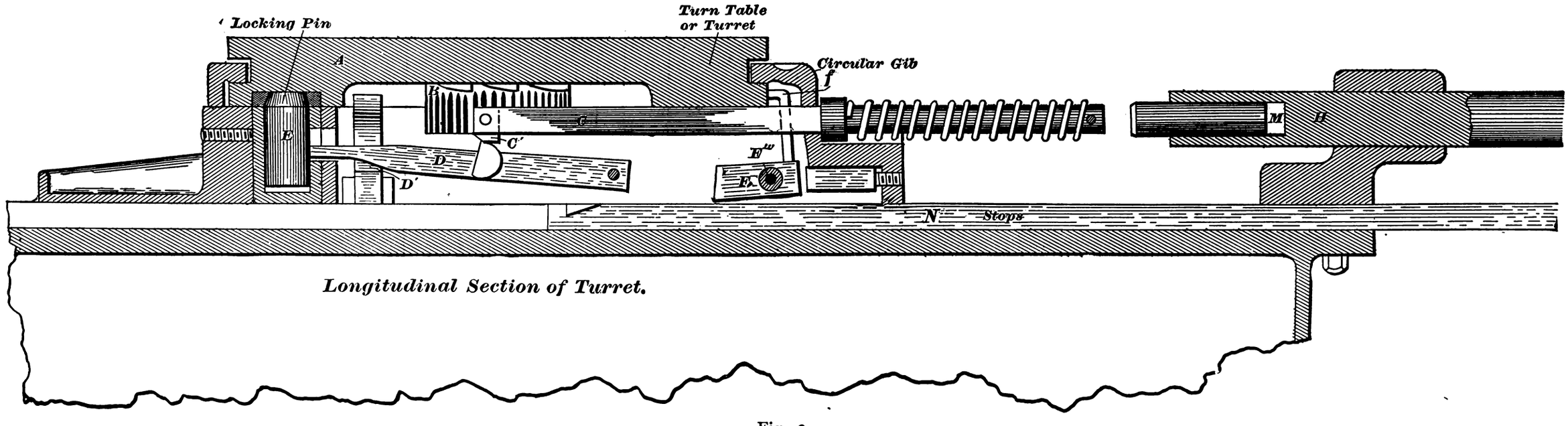

Longitudinal Section of Turret.

Fig. 2.

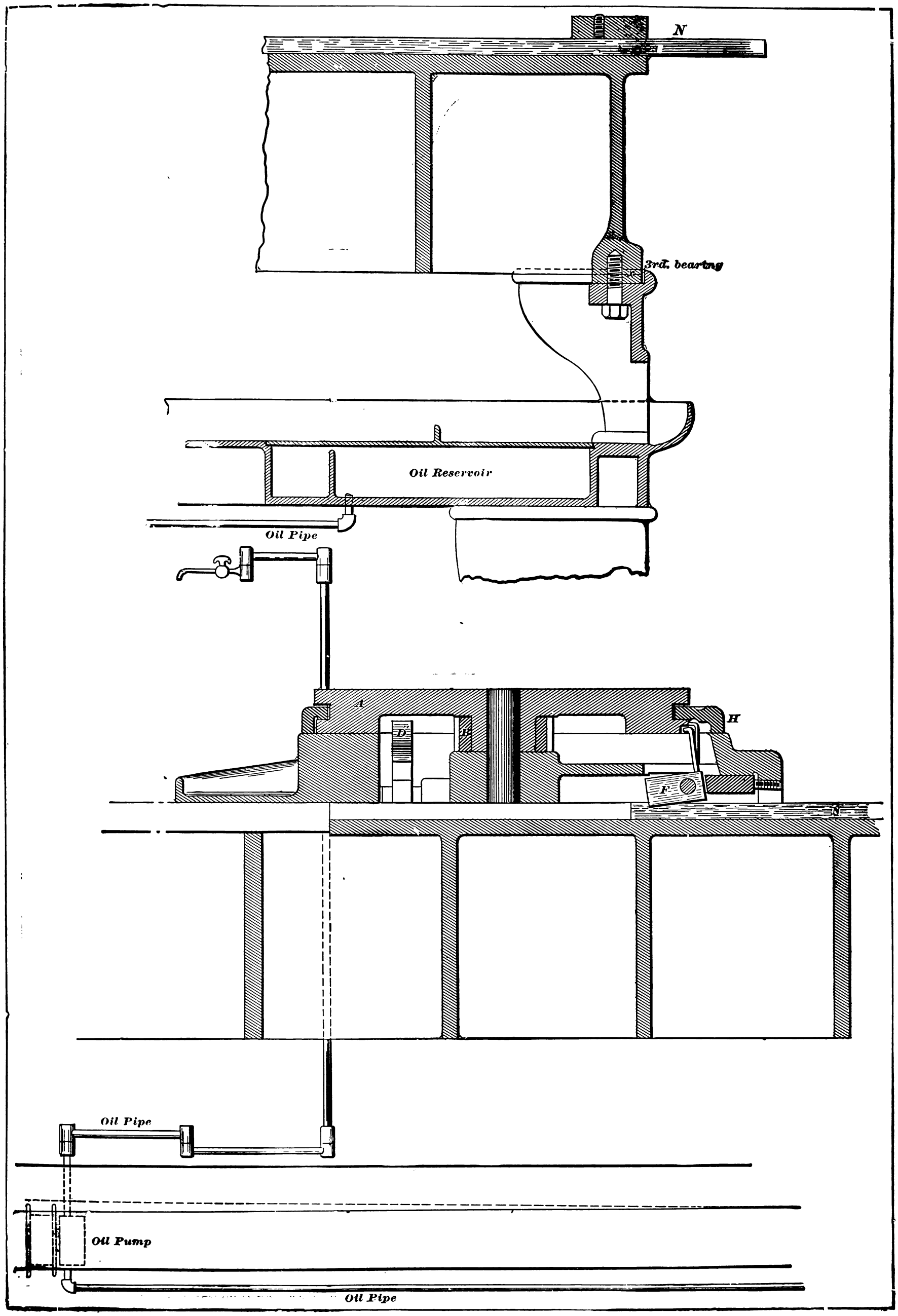
N
3rd. bearing
Oil Reservoir
Oil Pipe
A
D
B
H
F
N
Oil Pipe
Oil Pump
Oil Pipe

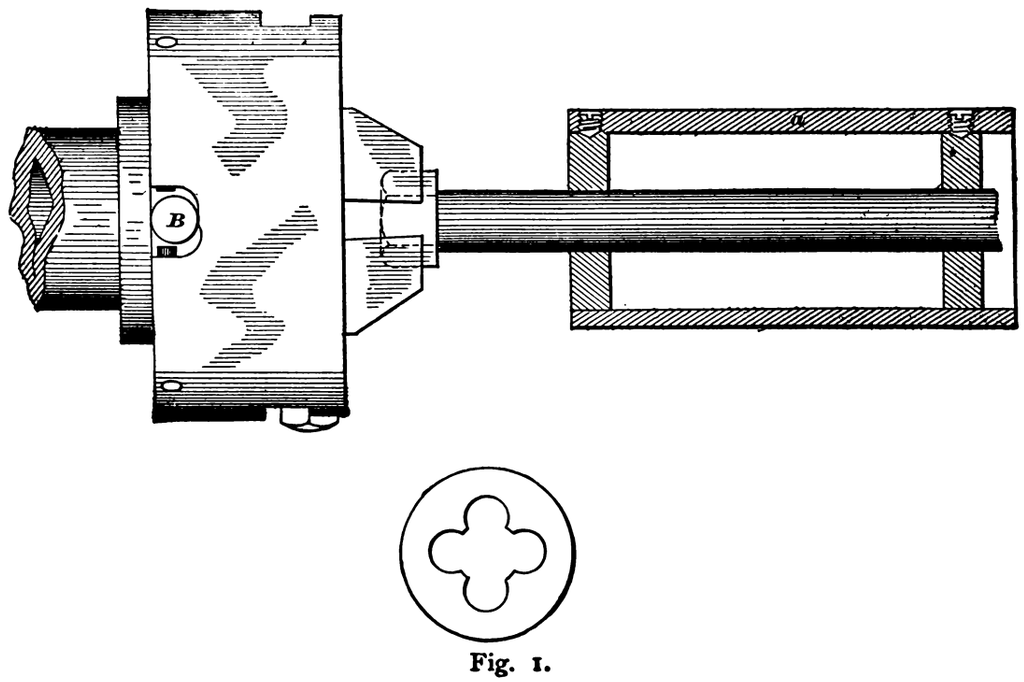

Fig. 1.

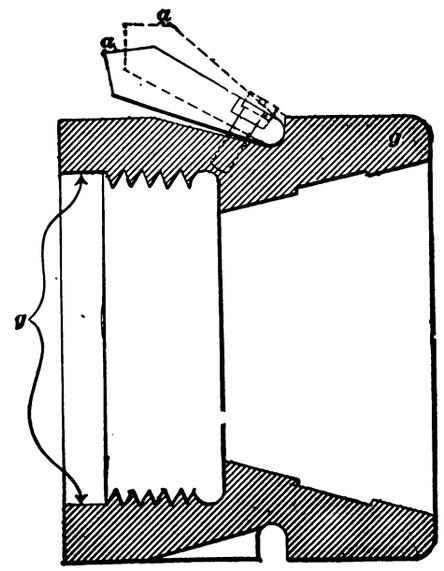

Fig. 2.

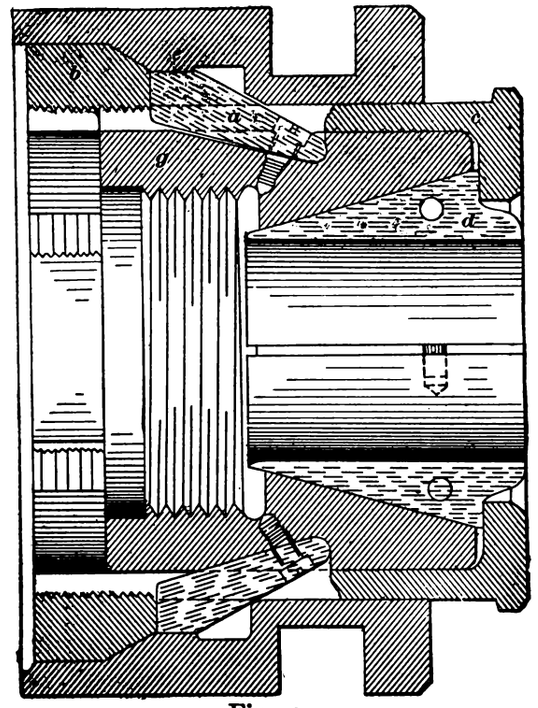

Fig. 3.

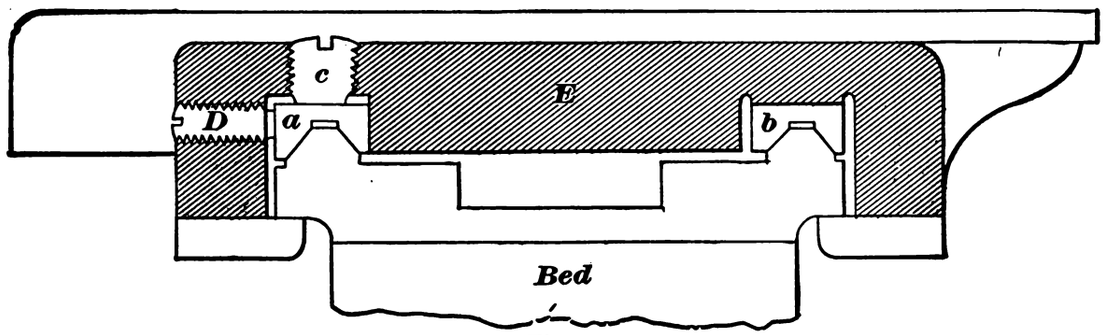

Fig. 5.

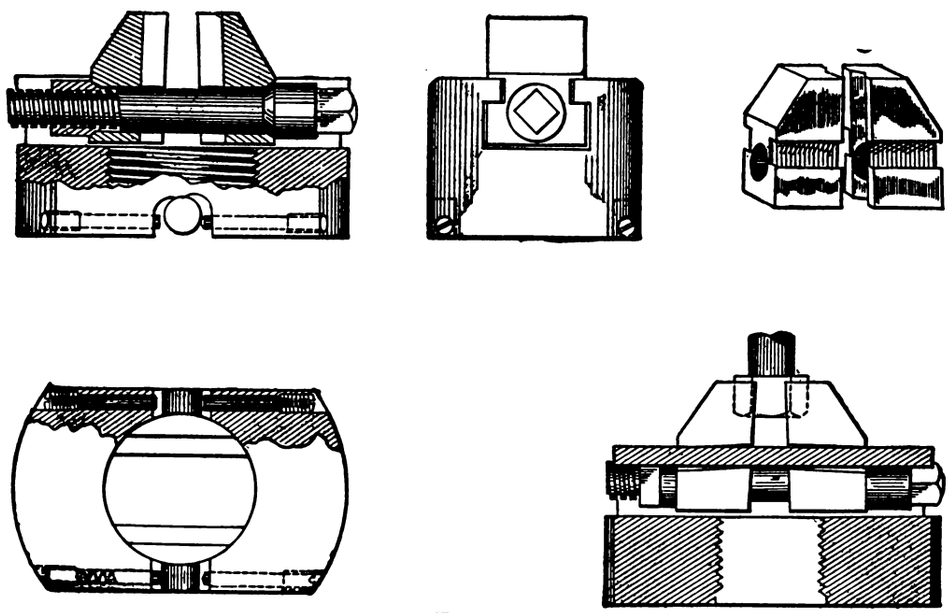

Fig. 4.

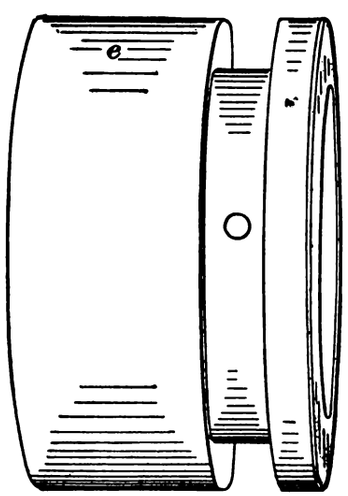

Fig. 6.

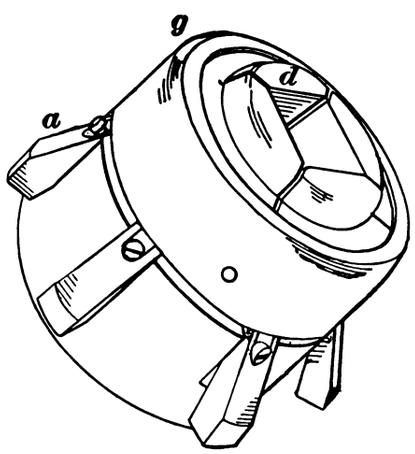

Fig 7. .

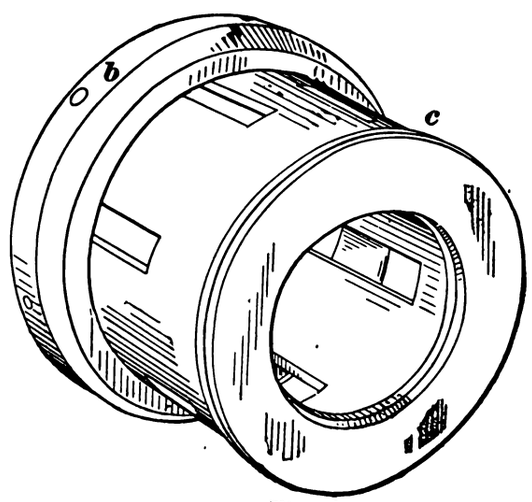

Fig. 8.

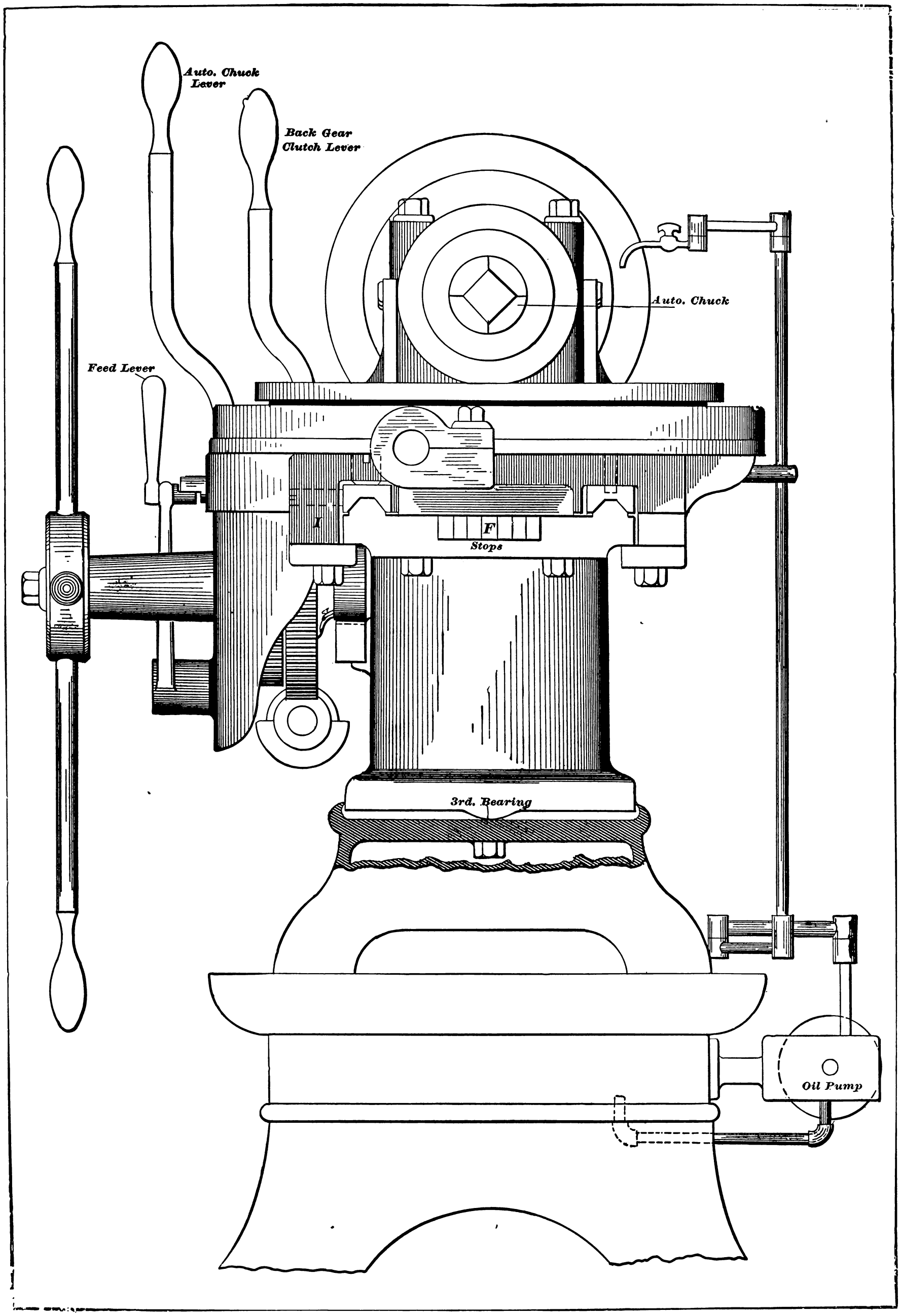
Auto. Chuck Lever
Back Gear Clutch Lever
Auto. Chuck
Feed Lever
I
F
Stops
3rd. Bearing
Oil Pump

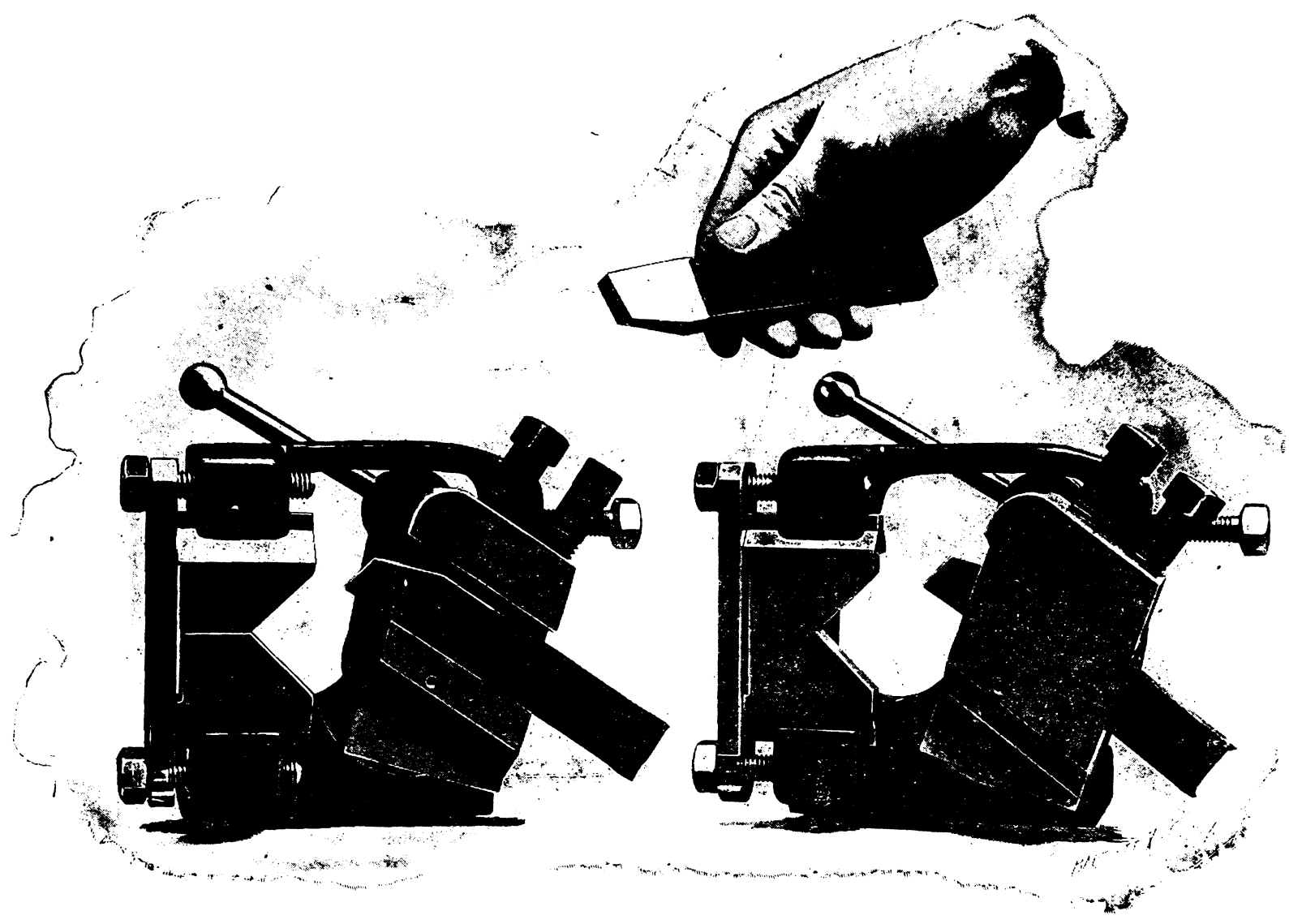

Fig. 1. TURNERS AND CUTTERS. Fig. 2.

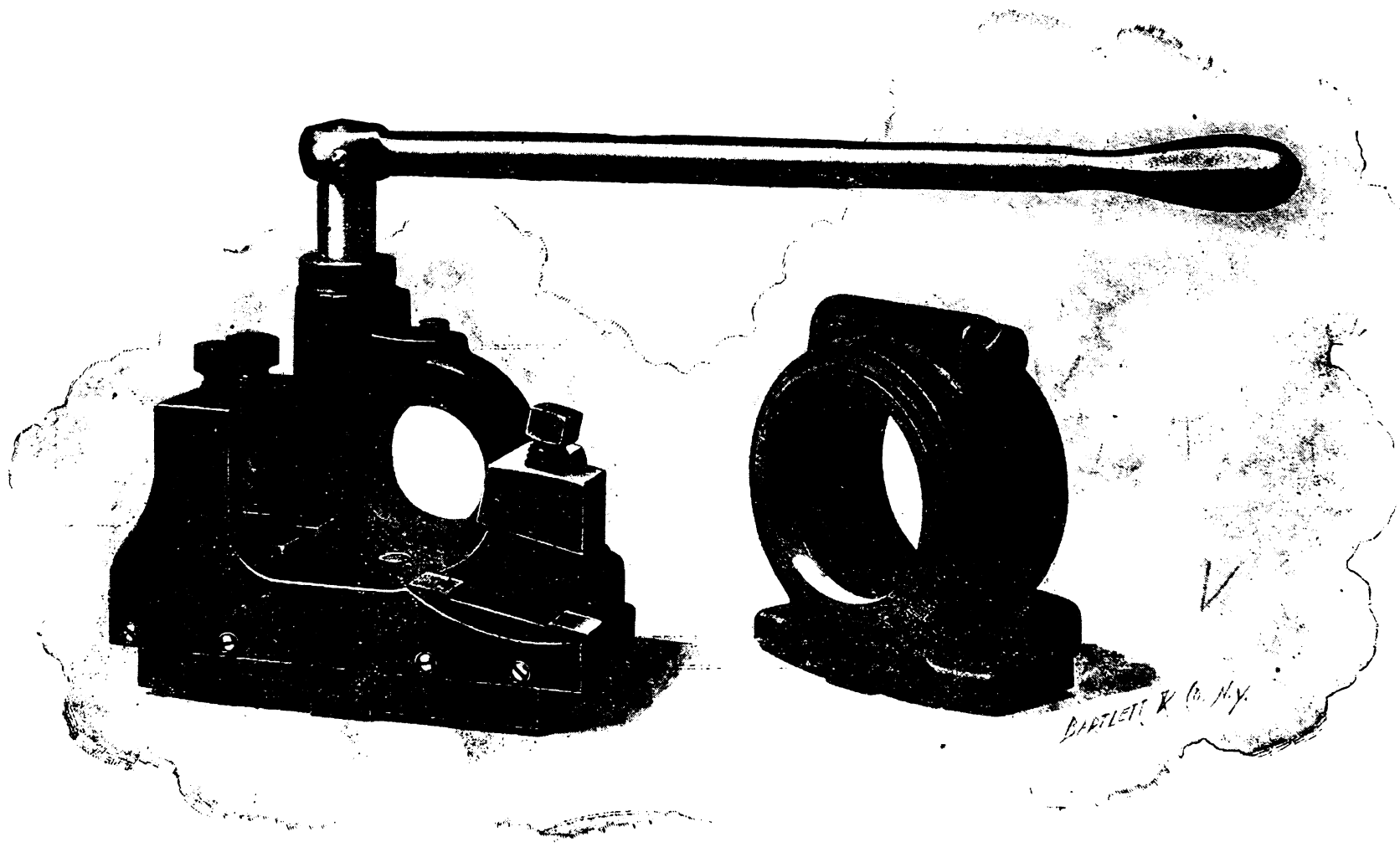

Fig. 3.—Cross Slide. Fig. 4.—Tool Holder.

tance between supports, and at the same time puts some of the bed and head where it will counteract the deflection instead of increasing it.

The third point of bearing is on the top of the short leg, a trifle one side of the centre, to compensate for the extra weight of the front of the carriage.

Another reason for connecting the pedestal leg to the bed as shown, is to prevent its varying the deflection of the bed; for if it were bolted rigidly to the bed, and it should happen to stand on an uneven floor that would give strongest bearing at a point farthest from the third leg, there would be an excessive deflection coming from increased distance between supports, and the additional weight of head and pedestal; while, on the other hand, if it obtains a strong inside bearing point, the weight of pedestal and head, as well as part of the bed, would be outside of the support, and would give a very different result.

All pieces of work shown on Plate XXX. can be produced on this class of machine from the rough bar, or forging, in much less time than by the regular engine lathe.

All the work shown, Figs. A to V, Plate XXXI., is made with only one chucking, and finished, except a small nib, which can be neatly removed with a fine file. This nib is left by the cut-off tool, and is very small when proper care is taken at the final severing of the piece from the bar.

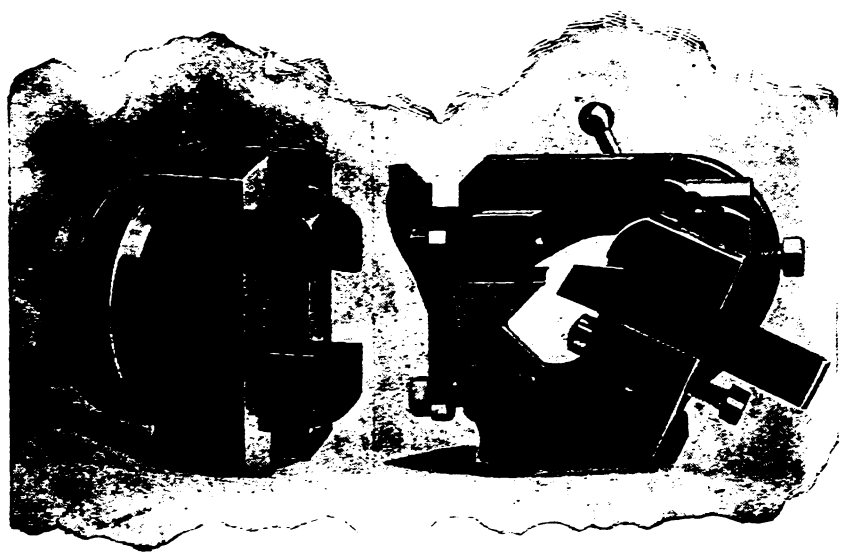

Fig. 552*b*.

Pieces B and W, Plate XXXI., are made from forgings. Piece E, if made in great numbers, can be cheaply produced from the forging; but if a very few are to be made, and machine forgings are not available, it can be quickly made from the rough bar.

All other pieces shown in Plate XXXI. are made from the continuous bar of rough stock. Drawn and rolled finished stock can be used and held true by the automatic chuck.

The pieces S, T, U, and V are made by using the taper turner. F represents a finished nut made from the bar. O, P, and Q represent finished washers made from continuous bar.

Necking can be done on slender work, as shown by piece X. This is accomplished by use of the turning tool, Fig. 552*b*. The back rest supports the stock, and the ball lever feeds the tool in to the correct depth. It may also be done by use of cross slide, Fig. 3, Plate XXXV., by inserting a bushing in the upright part, which is bored in true alignment with the spindle for this purpose.

The taper turner, Fig. 1, Plate XXXV., is used for turning long taper or irregular forms, such as handles, taper pins, and locomotive frame bolts. The cutter is held in a rocking tool holder, which is held in contact with a pattern or template bar by spring pressure. As the tool is fed over the work the pattern is held motionless. For turning short pieces of taper and irregular work under two or three inches long, it is preferable to use a broad tool, the cutting edge of which has been shaped to produce the desired form.

Figures 1 and 4, in Plate XXXIII., represent a chuck of special design, which has for its object, first, to provide a quick means for chucking irregular pieces of work, and particularly a kind of work in which the part gripped is of uncertain eccentricity to the part that extends beyond and is to be operated upon; second, to provide means for preventing the unscrewing of the chuck from the spindle when in use.

As shown in Fig. 1, the chuck is being used for holding bolt forgings. These forgings must be "trued up" by the body, letting the head run out as much as necessary. The bolt is first placed in the centring sleeve *a*, which is held by the turret; then the chuck is opened, and the turret run up till the bolt head passes into the chuck jaws. These jaws are loose in their slideways, and able to slide to any position to suit the bolt head when the bolt body is held true.

A screw draws the jaws together, and when the pressure is brought on it, tips the jaws in their slideways, and thus causes them to bind on the guides sufficiently to withstand all side thrusts of any cutting tool.

The back of the chuck is cut so as to form a taper pocket when screwed on the spindle. In this pocket a roll is placed, which is held in contact with the taper seat in the chuck and the collar of the spindle, and thus forms a "roll ratchet." A screw on the other side prevents its operating when the chuck is to be removed.

SCREW-CUTTING MACHINE.—The screw-cutting dies used in the flat turret lathe are the patent of James Hartness. The construction of the chasers is peculiar, inasmuch as the teeth at the front of the chaser have a cutting clearance, while the teeth at the back of the chaser have no clearance, but, instead, ride on the thread and control the lead. This gives the cutting teeth an ideal cutting clearance on each side of each tooth, and relieves these teeth of the labor of feeding to the die forward, and keeps the thread pitch true.

So accurate is the lead-controlling feature that regular dies for market seldom have an error in lead greater than one sixty-fourth in eighteen inches, which is less than one quarter the average error in standard taps, and less than one-half the error in ninety per cent. of engine lathes.

The construction of the chaser, of dies, and of the holders is thus described in the patent:

Heretofore, it has been found well-nigh impossible to secure perfect uniformity in any considerable length of screw cutting by the use of a die, for while the thread may not vary to any appreciable extent throughout, say, one inch of the thread, yet at the end of, say, six inches it is seldom found of the correct pitch, and will vary as much as a sixty-fourth, which is a serious defect. For this reason it has heretofore been found necessary to resort to the engine lathe for chasing a thread with an assured perfect lead.

It has been the practice in making chasers for screw-cutting dies to give the chaser the same clearance throughout its length, in some cases giving a greater clearance at the back portion of the chaser, and, in some cases, providing for no contact whatever of the back portion of the chaser with the work. Such formations give opportunity for variance in the pitch of the thread, because the lead of the die is not absolutely controlled. By my invention I propose to control the lead by having the back portion of the chaser (*i.e.*, that portion back of the teeth which do the actual cutting) serve as a nut, closely embracing the work and fitting the thread with a line contact extending back into the body of the die, and no contact at the front edge thereof, or along the line of the points of these back teeth. This involves a novel formation of the chaser, to be hereinafter specifically described with reference to the accompanying drawings.

Another object of my invention is to make provision for changing the lead of the die to secure different effects in the thread cutting, and this involves a peculiar relation between the chasers and their controlling means, which will hereinafter be specifically described.

Still another object of the invention is to provide for quickly changing the diametrical adjustment of the die to adapt it for roughing out or for finishing work.

The invention also aims to improve the general construction of the die.

With the above ends in view the invention consists in a number of novel constructions and combinations of parts which will be found recited in the appended claims.

The drawings which accompany and form part of this specification illustrate an embodiment of the invention.

Fig. 1, Plate XXXVI., shows a face view of the die partially broken away and sectionalized. Figs. 2, 3, and 4 show sections on lines 2,2, 3,3, and 4,4, of Fig. 1.

Fig. 9 shows a face view of a chaser for use when provision is made in the die for changing the lead, dotted lines being here used to demonstrate the effect. Fig. 10 is a rear end view of the die, illustrating certain modifications in the construction of the anti-friction spline between the die shank and the main holder.

Fig. 11 shows a section taken on line 15 of Fig. 3. Fig. 12 shows a top plan view of a piece of work with a chaser cutter over it, together with a broken-line illustration of a milling cutter by which the form of chaser shown in Figs. 6 and 7 is produced. Fig. 13 shows the same parts in end elevation.

In general construction, the die closely resembles that shown in my former patent, and a brief enumeration of the principal members of the die will suffice, without setting forth the details of construction described in said patent.

The letter *a* designates the main holder ; *b* and *c*, the two members of the die body, *b* being what I have hereinbefore referred to as the "shank" ; *e*, the chaser cutters ; *f*, the cam engaging said cutters, and by its rotary movement opening and closing the same ; *f'*, the cylindrical cam holder adjustably connected with the cam, and rotatable on the member *c* of the die body ; and *g*, the spring-pressed collar connected with the cam holder, and employed for automatic opening purposes.

In order to minimize friction between the shank *b* and the holder *a* under working strain, these parts are rotatively connected together by means of rolling splines, either in the form of balls or rollers.

In Fig. 4, the two parts mentioned are shown as formed at opposite sides, with confronting longitudinal grooves z and z' semicircular in cross-section, and balls z^2 occupy these grooves, and are confined by pins z^3, entered through the holder *a*.

Disk-like rollers *y y'* (see Fig. 10) may be employed instead of the balls, with substantially the same effect, the grooves in the shank and holder being correspondingly formed. The roller *y* is shown as set in with its axis in a plane embracing a diametrical line of the die, and the grooves in which it runs are rectangular in cross-section. This roller will take a thrust in either direction, and hence is adapted to both right and left-hand dies. The roller *y'* is shown set in angularly and engaging grooves triangular in cross-section. This roller is thus adapted to take a thrust in one direction only.

It will be readily recognized that any of the forms of connection above described intervening between the holder and shank, constitute an anti-friction spline minimizing friction in longitudinal movement of the shank in the holder under working strain.

Instead of the bayonet form of connection between the spring-pressed ring *g* and the cam holder *f'* shown in my former patent, I now use knurl-headed taper-pointed screws *x*, entered through the cam holder and engaging sockets in the ring ; and instead of the pivoted latch of said former patent I employ a sliding bolt *w*, fitted through a handle *w'*, which is screwed into the cam holder. A spiral spring w^2 surrounds a reduced part of the said bolt, and exerts itself to produce locking engagement between the latter and the die body. The bolt is likewise rotatable, and is cut out in opposite sides at its inner end, as shown at w^3 and w^4, Fig. 11, one cut extending nearer to the longitudinal centre of the bolt than the other. The locking engagement of the bolt with the die body is in these cut-out places, and to change the adjustment of the die it is only necessary to turn the bolt half-way around. Thus the die can be quickly changed from finishing to roughing out adjustment, and *vice versa*, by varying its cutting diameter.

The same co-action is had between the sliding bolt and the automatic opening devices, as between the pivoted latch of my former patent and these devices.

There is a slight difference in form of the ball-headed block *m*, in that it is grooved longitudinally, as shown at *m'* in Fig. 3, to receive the tappet piece or releasing pin *n*, said groove having an inclined or curving base to act to thrust the pin against the bolt *w*, when the die body member *c* moves outward longitudinally.

The bolt is locked in its different positions of rotary adjustment by the engagement of a pin w^5, fastened in the end of the handle *w'* with any one of a series of sockets w^6 in a knob w^7 on the bolt.

Of course there may be more than two cut-out places in the bolt, and as many adjustments may be provided for in this way as required, the principal advantages derived being a saving of time in changing from one adjustment to another.

Another change to be noted over the construction shown in my former patent is that the flange f^6 of the cam holder, instead of being integral with the holder, is a separate ring screwing into said holder. This has to do with the object above stated of changing the lead of the die, for by adjusting this ring the cam which confines the chaser in its socket is caused to move in or out, and its control of the chaser is thus affected. The chaser can be held perfectly square in its seat by screwing the ring up tight, or by loosening said ring the chaser can be allowed to cant under working strain, there being allowed sufficient lateral looseness between the cam and chaser for this purpose. The object of this adjustment is to provide means for varying the depth to which the heel or leading part of the chaser shall enter the thread of the work. Now by cutting the teeth of the chaser at an angle greater than the correct leading angle, the tendency of the chaser will be to lead at the angle of its milling. In Fig. 12 the line *u u* indicates the angle at which the chaser has been milled, and the line *u' u'* indicates the correct leading angle. Now by furnishing a means for varying the pressure of the heel of the die into its work, it may be caused to lead slower, or to lead up to the angle of its natural clearance (indicated by line *u u*).

The object first stated, namely, that of making the lead positively uniform, may be accomplished in a variety of ways. Figs. 7, 12, and 13 illustrate a novel formation of chaser for the purpose, and it may be well to first state that this chaser is produced by the milling process rather than by the use of a helical tap, as commonly practised in making chasers. In using a milling tool whose teeth pass around its circumference in true circles instead of helically (which is the kind of tool proposed to use), I work said tool on an angle to the chaser to correspond with the lead. This very act of establishing an angular relation between the milling tool and the chaser blank effects the peculiarity desired in the formation of the acting face of the chaser when the latter is moved radially into engagement with the mill ; viz., the cutting of the said acting face on different angles at different points in its length, which will be best understood by reference to Figs. 12 and 13. The axis of the milling cutter (indicated by the line *y y* in these figures) at different points bears different relations to the face of the chaser, so that the circles of the milling teeth vary throughout the longitudinal extent of the chaser. Take the point designated t^5 in Fig. 13 (this being the forward end of the axis of the mill), and the circle described thereabout and indicated by the broken line t^6 will be found to traverse the face of the chaser so as to create in the milling action a cutting edge at the front side u^2 of the chaser at the point *u*, for that point in the plane of the front side of the chaser is the lowest point traversed by the circle of the milling tool. The highest point is at the back side of the chaser at *u'*, and thereby a full clearance is obtained. On the other hand, when the back end of the chaser is considered, the centre t^7, about which the milling tool at this part revolves, has changed in its relation to the face of the chaser as compared with the milling centre at the front, so that the highest point traversed is now at the front side of the chaser, as indicated at u^5, and the lowest point is at the back side, as indicated at u^3. A line embracing the points of intersection of the various circles of the milling teeth (as the point u^6, Fig. 13) will follow a line contact between the chaser and the work, and that line contact will extend from the point of the last tooth to cut back into the chaser to the point u^6. This peculiarity of the acting face of the die may be stated in this wise, that the edges of the several teeth lie in different intersecting planes on different angles to the front side of the die, so that the amount of clearance decreases from the front end of the die to the back end while the points of the teeth recede from cutting

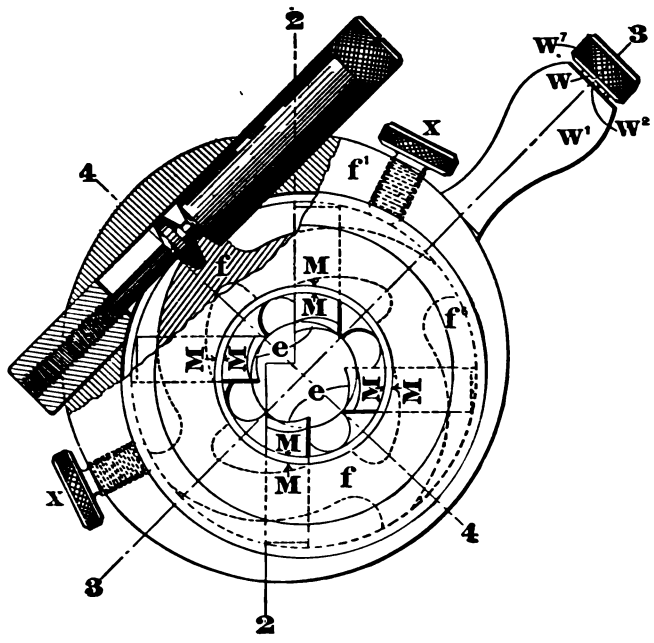

Fig. 1.

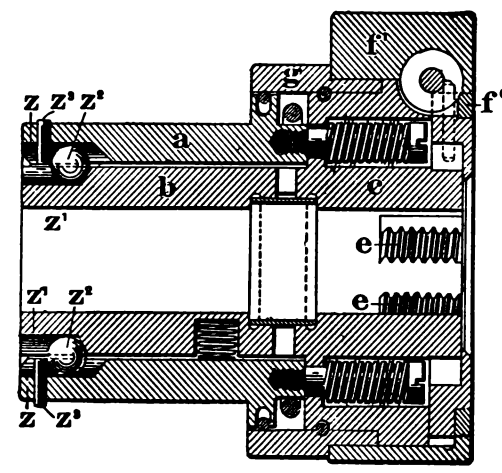

Fig. 4.

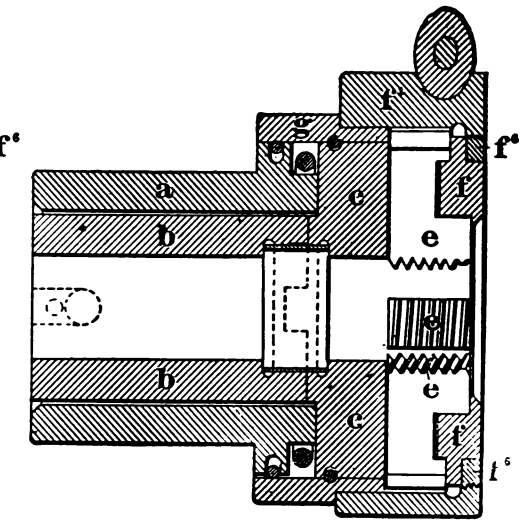

Fig. 2.

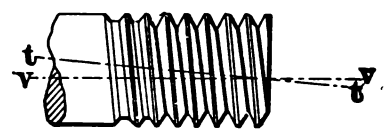

Fig. 8.

Fig. 6. Fig. 7. Fig. 3. Fig. 11.

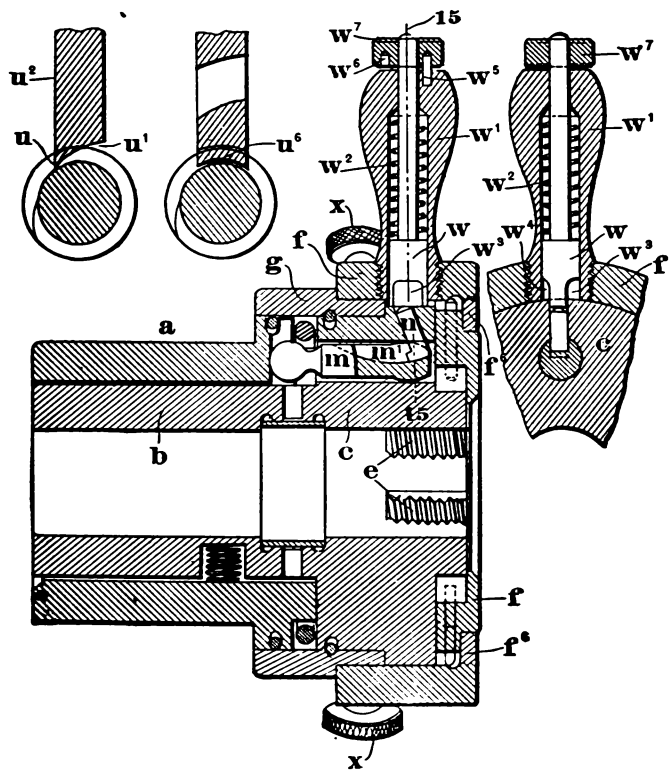

Fig. 12.

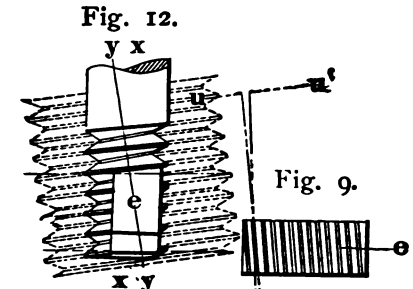

Fig. 9.

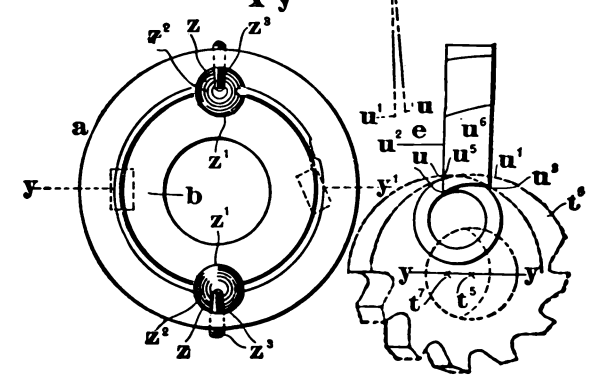

Fig. 10. Fig. 13.

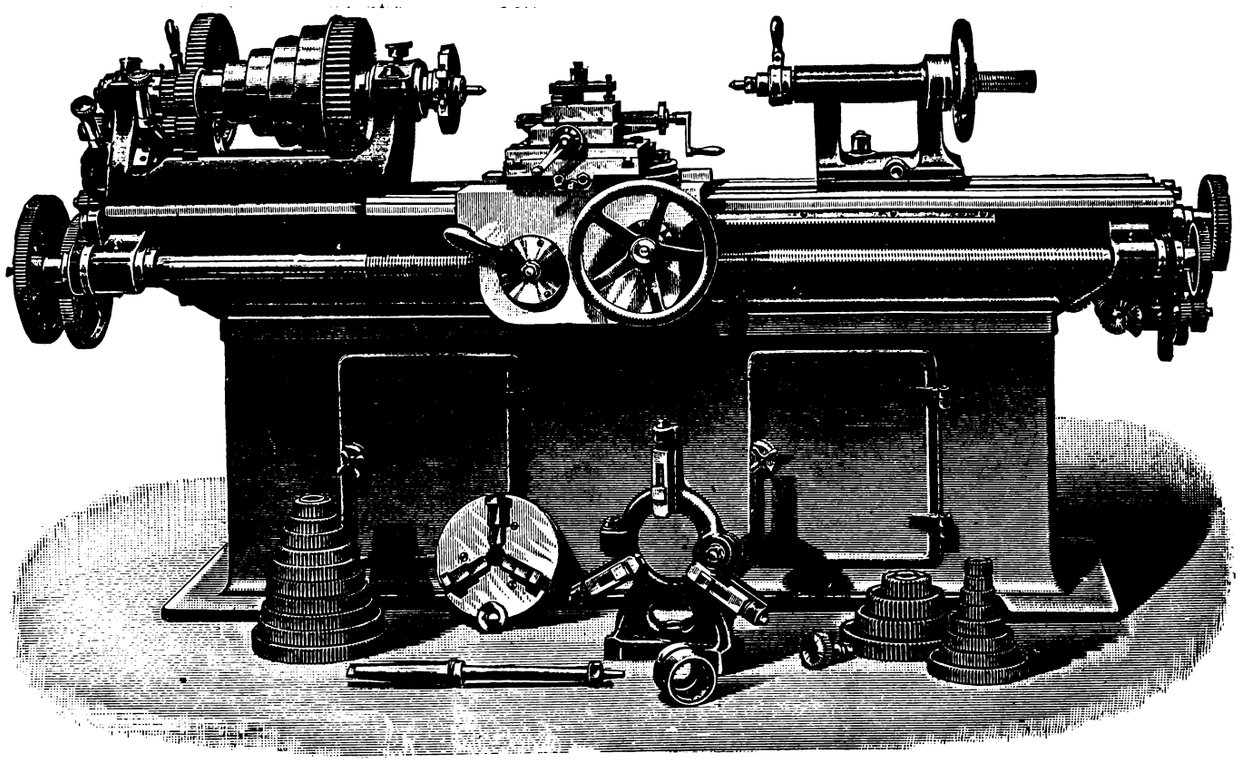

Fig. 1.

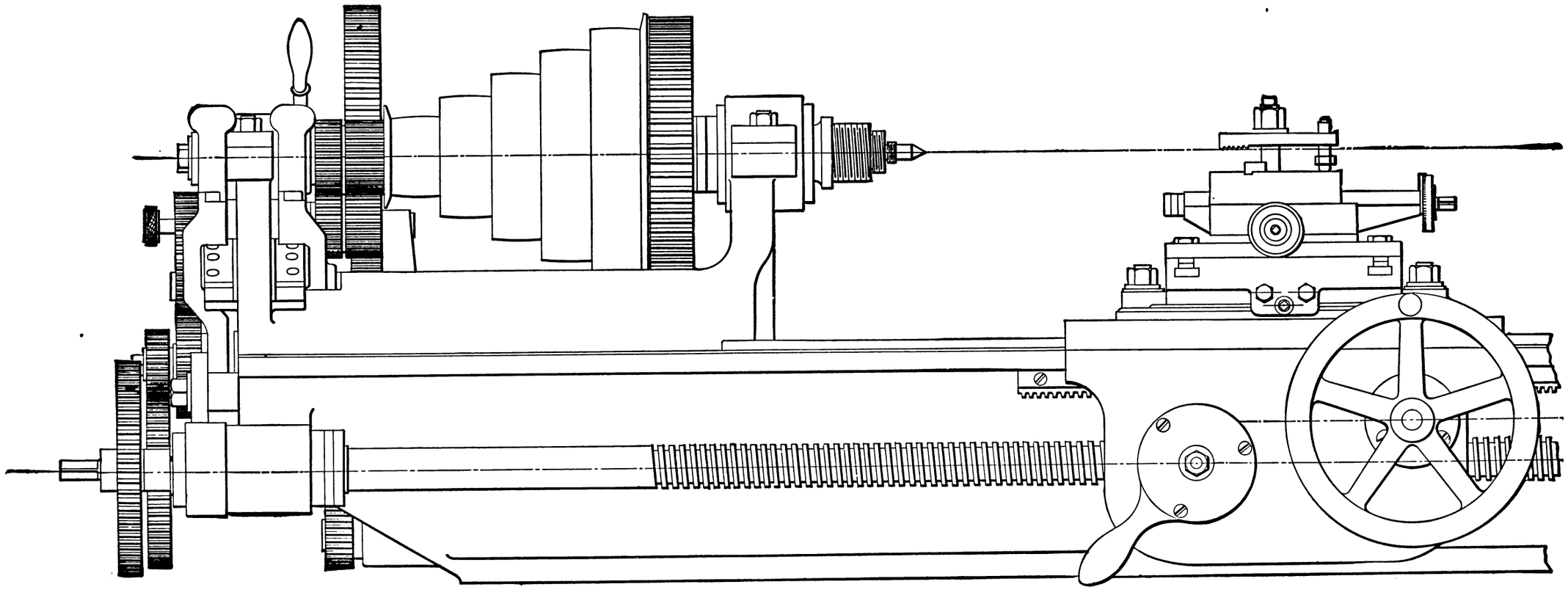

Fig. 2.

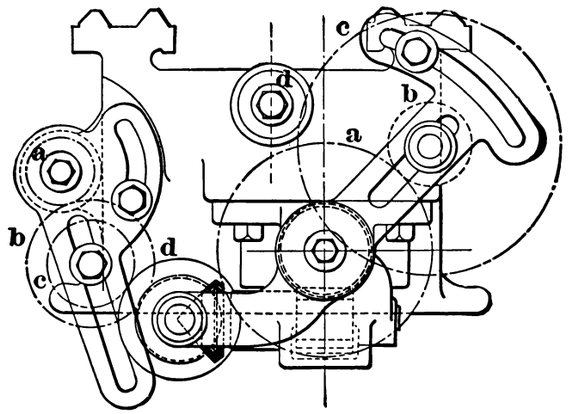

Fig. 5.

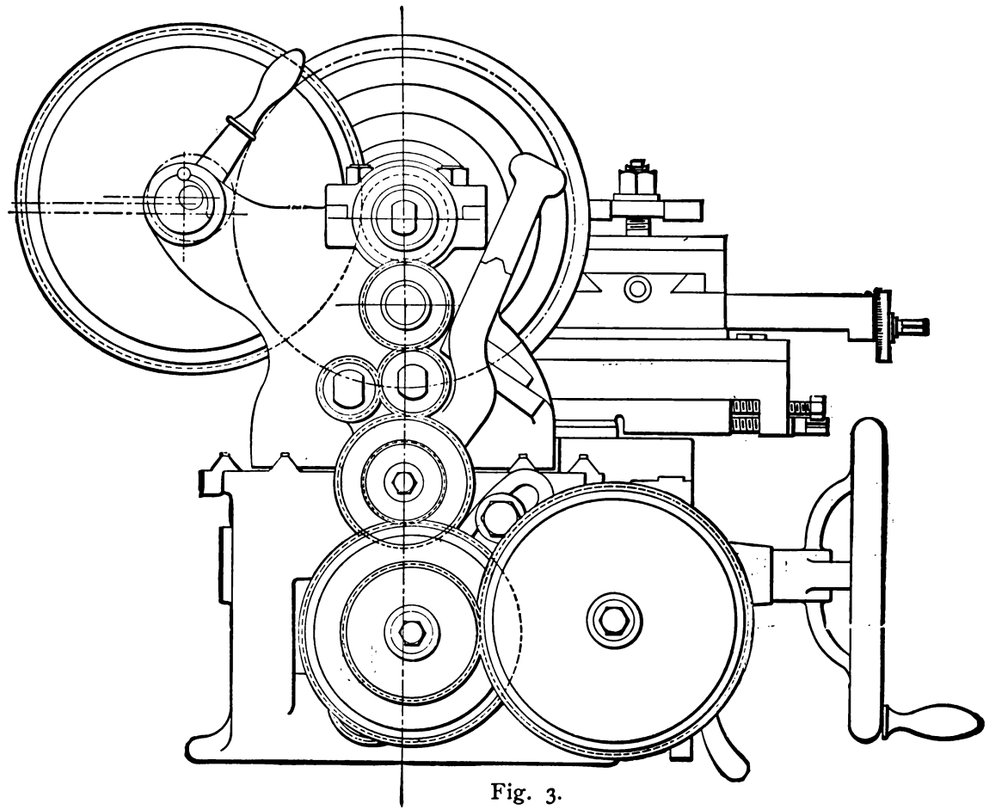

Fig. 3.

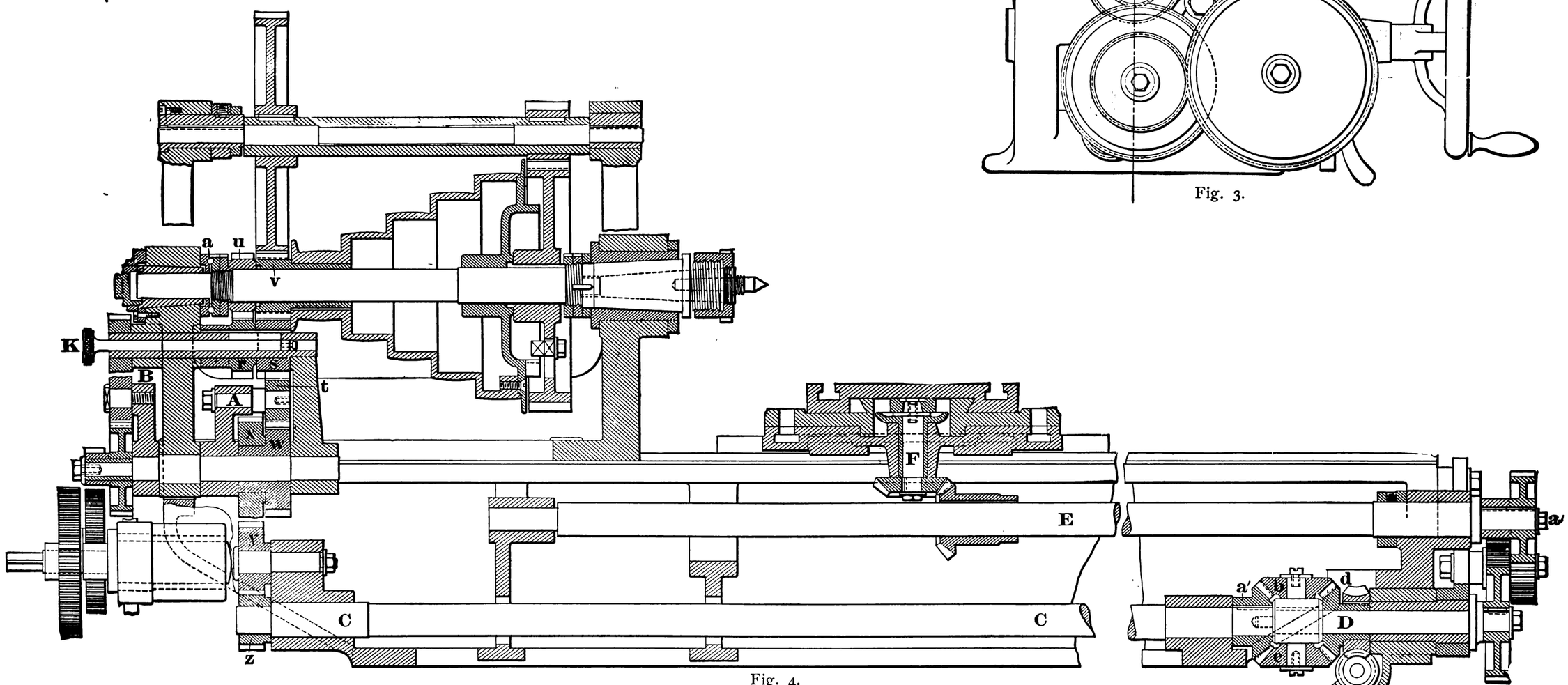

Fig. 4.

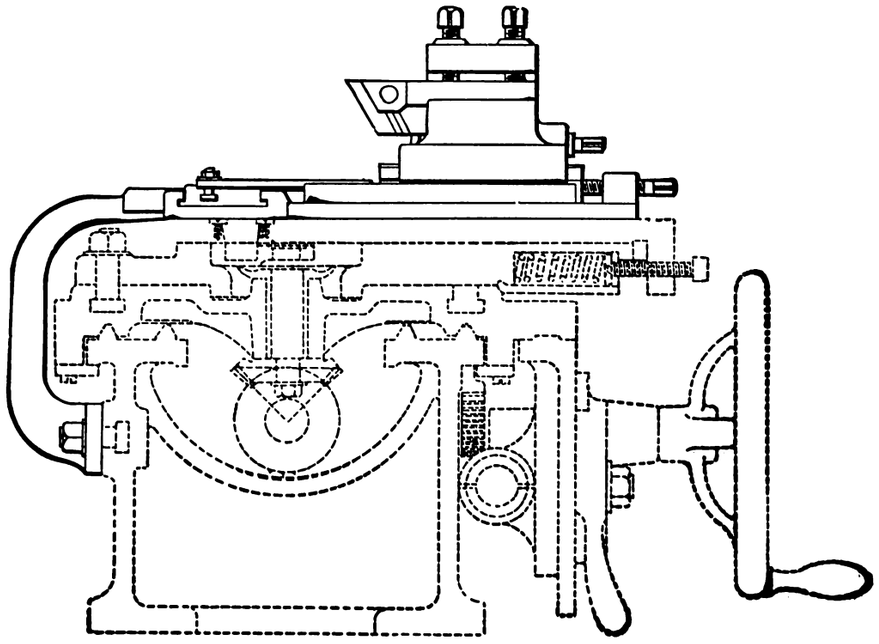

Fig. 10.

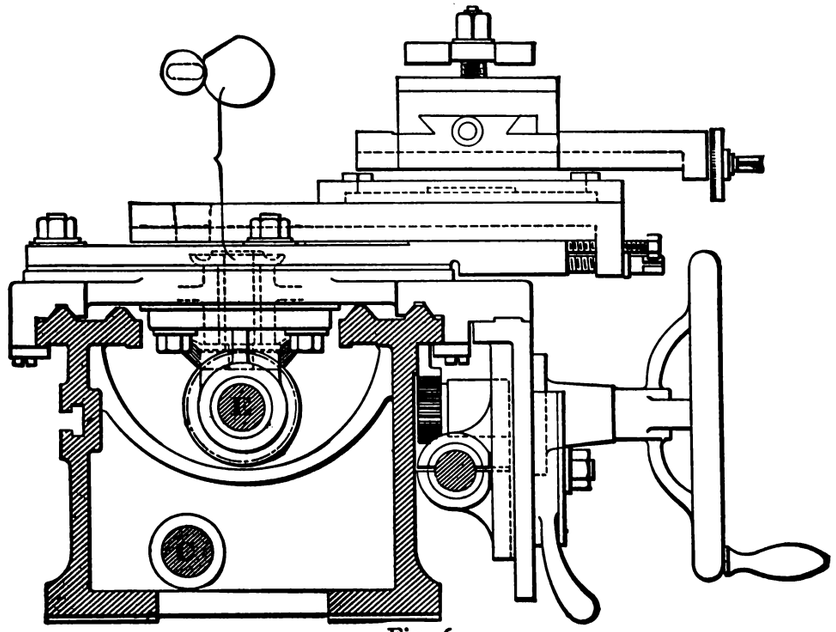

Fig. 6.

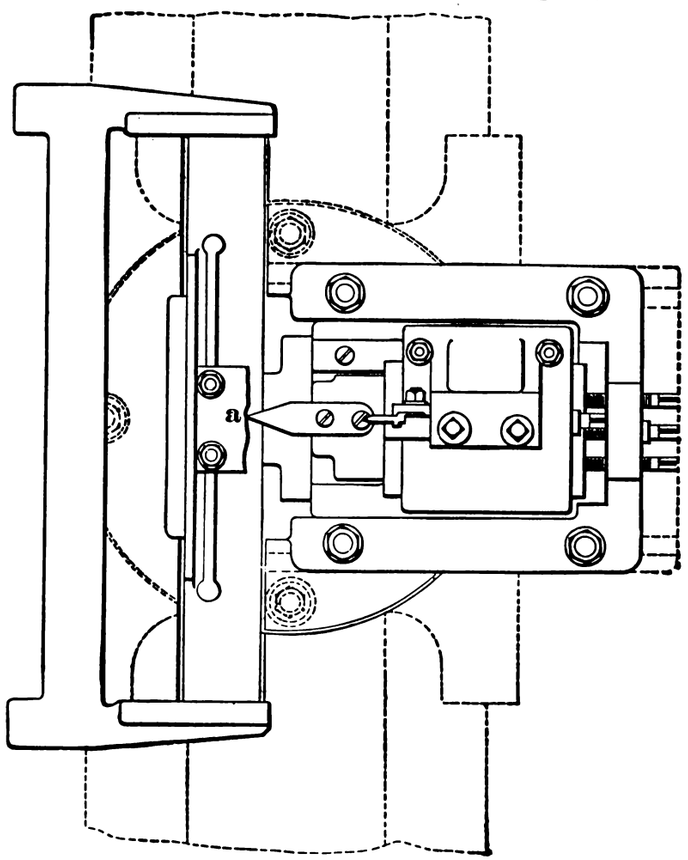

Fig. 9.

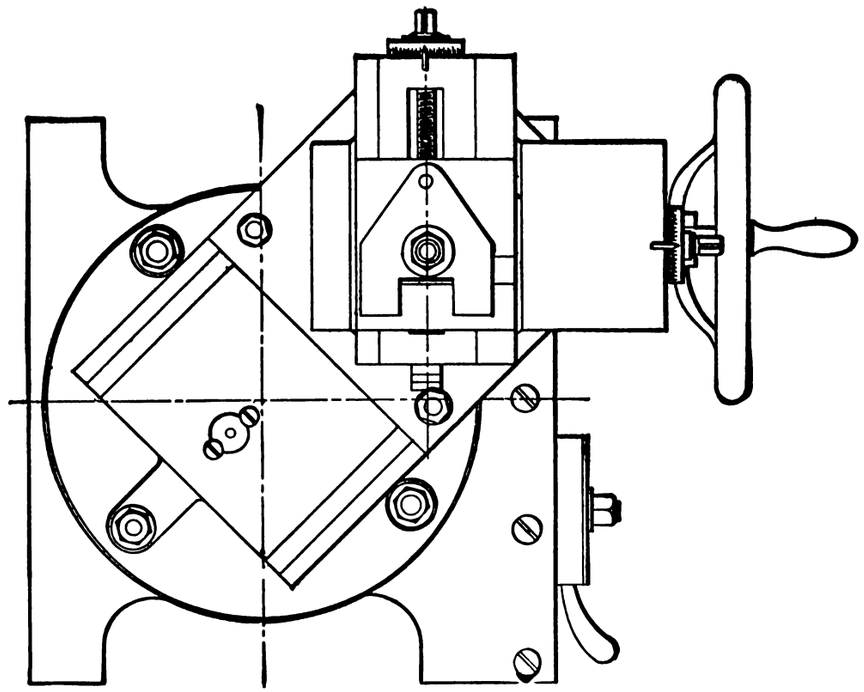

Fig. 8.

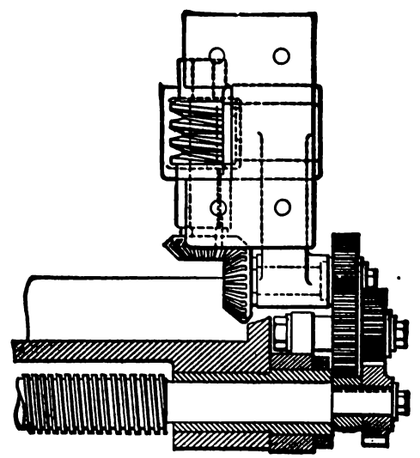

Fig. 7.

position, the line of contact between the die and the work at the rear portion of the die being in the body of the die and not at the points of the teeth, as heretofore. The idea is to get a free cutting edge at the front end of the chaser, as shown at u in Fig. 6, with a full clearance back of the same, as shown at u'; but in passing back through the chaser, the clearance decreases and the line of contact of the chaser with the work recedes from the plane of the face u^2 of the chaser while the points of the teeth at the front side u^2 leave the work. At the back of the die there is no cutting clearance (see Fig. 7), and a good leading contact is had, as shown at u^3, the teeth of the chaser occupying the thread of the work throughout the width of the chaser, but pressing closely on the work only at the middle. To make this more clear, I have shown in Fig. 8 a line $v\ v$, which indicates the plane of the face of the cutter, and a line $t\ t$, indicating the longitudinal line of contact between the work and the cutter.

The longitudinal line embracing the points of the teeth at the front side of the chaser gradually leaves the work, while the longitudinal line of contact between the chaser and the work moves back into the chaser. In other words, the points of the teeth, back of a few which do the actual cutting, have no cutting engagement with the work and cannot have under any circumstances (which is clearly illustrated in Fig. 7), there being a controlling line of contact in the body of the die, which line recedes from the plane of the front side of the die.

Chaser cutters of this character will operate on the work with a perfect lead, and the result is absolute uniformity in any length of thread.

The essential peculiarity of the chaser may be described as that of having a cutting clearance at the forward end or mouth and no such clearance at the back or heel, so that it forms a cutting tool at the entrance and a leading nut at the rear.

I believe it to be new with me to accomplish this result by a peculiar formation of the acting face of the chaser, and while I have described the peculiarity as being produced by a milling process, I do not wish to be understood as limiting myself to any particular mode of producing the necessary peculiarity of formation, for it may be accomplished in a variety of ways.

By reference to Fig. 1, the face of the cam f may be seen to be inscribed with marks M for registry with similar marks on the chasers, so that when a new set of chasers is placed in the dies a proper adjustment of the cam with relation thereto may be assured by causing the marks to register.

LATHE WITH CAPACITY FOR RELIEVING OR GIVING CLEARANCE TO THE CUTTING EDGES OF TOOLS.—This lathe, whose construction is shown in Figs. 1 to 10, Plates XXXVI.–A to XXXVI.–C, is constructed by, and is the design of, J. E. Reinecker, of Chemnitz-Coblentz, Germany.

Fig. 1, Plate XXXVI.–A, is a general view of the lathe, which is of ordinary standard pattern, the novelty consisting of some special features which in no way interfere with the use of the lathe for all ordinary work. Figs. 2 and 3 are side and end elevations; and Fig. 4 a longitudinal sectional view, showing details of the mechanism.

Referring to Fig. 4, Plate XXXVI.–B, the arrangement of spindle bearings is seen, the front bearing being taper, and the thrust taken upon a ring of steel balls a, at the forward end of the rear bearing. Just below this bearing is a stud shaft, which is fitted with a sliding key, moved by the knurled knob K outside, by means of which this stud can be driven by either one of two gears r, s, which are mounted loosely upon it near its inner end. These gears are of the same size, and r engages with a gear u keyed to the main spindle, while the other engages with the gear v on the cone pulley. Since the ratio of the back gearing is 16 to 1, it is evident that when the back gear is thrown in, threads of two different pitches can be cut, using the same arrangement of change gears, the pitch of thread cut when the key is pushed in being 16 times as great as when the key is pulled out. The drive from the cone pulley is especially useful when cutting worms or other very coarse threads. Outside the head and below this stud is placed the usual tumbling gear arrangement, by which the feed motion is reversed, so that right or left-hand threads may be cut; and translating gears are supplied, by which metric threads, or modul threads having 3.1416 mm. as a unit of measurement, may be cut.

The gear s, driven from the cone pulley, acts also as an idler, by means of which a train of gearing t, w, x, y, z, is driven, that gives motion to the shaft C, which passes through the bed, as shown, to a point near the end of the bed, where it terminates, and has keyed to it at the end the mitre gear a', which is in mesh with two other mitre gears, b and c, which are mounted to turn freely upon studs, which are fixed opposite each other in the enlarged end of the shaft D, which is called the differential shaft.

The two wheels b and c engage with a fourth mitre gear d, the motion of which is controlled by the worm wheel seen at the right of it, and visible also in Fig. 2, Plate XXXVI.–A. If the wheel d be held stationary, then the differential shaft D will make one revolution for two of the shaft C, but by giving motion to the gear d by means of the worm gearing, driven from a train of change gears attached to the end of the lead screw, as shown at Figs. 2 and 7, Plates XXXVI.–A and XXXVI.–C, the motion of the differential shaft D and of the splined shaft E can be modified; the last-named shaft being driven by the differential shaft through the medium of another train of change gears, as shown in Figs. 1, 4, and 5, Plates XXXVI.–A and XXXVI.–B. The motion of this entire train of mechanism can also be reversed by a tumbling gear arrangement under the head, controlled by the lever A, Fig. 4, Plate XXXVI.–B.

The splined shaft E drives by means of mitre gears a vertical shaft F, which is fitted to the carriage, and at the upper end of which is a cam that gives a slide the required motion to cause the tool to back off, or relieve the teeth of a milling cutter, and as this slide can be set to any desired angle, as indicated in Fig. 8, it follows that the clearance can be given at any angle, including what is called side clearance, if desired.

By means of changing the gears composing the last-named train—*i. e.*, the one connecting shafts D and E—the cam at the carriage can be given the required number of revolutions per revolution of the lathe spindle called for by the number of teeth in the cutter, and if these teeth are straight, then this train of gears is the only one that needs to be considered, except that for giving the proper rate of feed; but if the teeth are spiral, then a table shows the proper gears to use connecting the end of the lead screw with the worm shaft, by means of which the mitre gear d is given just the required motion to retard or accelerate the motion to compensate for the spiral, whether it be to the right or to the left.

When the cutter to be relieved is of irregular outline, the device, Fig. 9, Plate XXXVI.–C, is used, where a form or pattern is adjustably secured to a bar which is supported by brackets attached to the back of the lathe bed by a T-slot.

It will be noticed in Fig. 8, Plate XXXVI.–C, that the slides of the compound rest can be kept in their normal position, if desired, regardless of the angle to which the backing-off slide is set, and that they can be moved in or out upon the lower to suit circumstances.

The lathe not only produces milling cutters which can be ground on the faces of the teeth without change of form, but it will also give clearance to worm hobs, and do a large variety of similar work not within the scope of the ordinary lathe.

GISHOLT'S LATHES FOR HEAVY WORK.—These lathes mark an era of advance, in their capacity to take wide and heavy cuts with a multiplicity of tools, while producing smooth and true work. Referring to Figs. 1, 2, and 5, Plates XXXVI.–D and XXXVI.–E, the bed, headstock, and brackets are, to avoid vibratory strains, cast solid in one piece. The turrets are hexagonal and slide directly on the ways of the machine, while, to avoid spring, the turrets are of very large diameter. The carriage is provided with the turret tool post, each tool of which is independently adjusted for height. Both the carriage and the turret may be used in screw cutting. The cross-feed has a micrometer index reading to one thousandth of an inch. Automatic feed and dead stops, independently adjustable, are provided for each face of the turret, and independently adjustable stops are provided for each tool in the turret tool post. The feed motions permit of four changes of feed, varying as 1, 2, 4, and 8, which are instantly obtainable,

either from the end of the lathe, or from the turret slide. The feed motion is also instantly reversible.

Figs. 3, and 4 give examples of the operation of these lathes in finishing cone pulleys. The pulley shown has 3¼ inches bore and the three large steps are finished on the inside. The first tool employed is that for boring and facing the three largest steps. Double cutters are used in this tool, which is rigidly fastened to the turret face, and steadied on the outer end by a supporting bar which fits a bushing in the chuck. The second and third tools are the roughing and finishing boring bars, each supported, when doing their work, at the outer end in a chuck bushing. The fourth and fifth tools are the Gisholt standard facing heads, with finishing and sizing cutters for boring and facing the largest step. This completes the first operation. In the second operation, the pulley is mounted on a face plate arbor supported from bushing in chuck, the outer end running in holder as shown. A cone plate fitting the bore of the largest step, and a bushing fitting the bored hole, are placed on the arbor and the pulley pressed on them in place; the cone plate in this case is permanent and, therefore, fastened securely in the pulley.

A driving plate with two studs is fastened to the chuck, the studs fitting holes in cone plate and acting as drivers. The regular tool post is removed and in its place is mounted the double cone pulley turning tool with the proper multiple cutters inserted, as shown, and the cross slide connected with former, or taker, attachment slide. All steps are roughed out and faced with this tool, which is then revolved so that finishing cutters are in position. The finishing cut is then taken in the same manner, and the pulley is completed.

NEW HAVEN MANUFACTURING COMPANY'S LATHE.—Fig. 554 is a front view of the New Haven Manufacturing Company's lathe with independent rod and friction feed. The arrangement of the compound rest is shown in Fig. 553*a*, while the rise and fall carriage is shown in Figs. 555 and 556. A taper turning attachment is shown in Fig. 553*a*, which is a rear view.

This lathe is provided with an automatic stop motion for the carriage, which is seen in Figs. 553 and 554, the former also showing the hollow spindle in the feed mechanism on the larger sizes of lathes.

FAY AND SCOTT'S LATHE.—Pattern makers' lathes. Fig. 557 illustrates a pattern maker's lathe in which the hollow head spindle extends through the outer end of the headstock, and is provided with a large face plate on that end for turning pulley patterns, or any work larger than the swing of the lathe. The carriage has a hand feed (by rack and pinion) the entire length of bed.

The tail spindle sets over to turn taper (on work between centres), in connection with the carriage. The cone (which is bored inside to secure perfect balance) has four changes of speed for 2¼-inch belt. The rest holder sets on a plate fitted to the ways, and is readily and securely fastened with a cam lever at the back, within easy reach of the operator.

A 41-inch pattern maker's lathe is shown in Fig. 558. The headstock swivels for turning taper work on face plate. The head spindle front bearing is 3 inches in diameter and 6 inches long, and is chucked for centres with Morse taper No. 4. The face plate is fitted to the end of the spindle with a feather, and is drawn back to the collar by a rod passing through the spindle and screwed into a collar recessed into the front of the face plate by the small hand wheel shown at the outer end of the headstock. The head cone has four steps for a 4-inch belt, the largest step being 17 inches in diameter. The carriage is fed by power from the small cone on the end of the spindle, and the direction of the feed is reversed at the apron by the knob shown near the hand wheel. The lathe has a compound rest, graduated in degrees. A follower rest is attached to the carriage by a gib, and is readily adjusted to work of any size that would require a follower rest.

A 66-inch pattern maker's gap lathe is illustrated in Fig. 559. The carriage has a compound tool block, graduated in degrees for work up to full swing of lathe with gap closed. The compound tool block on the bar at the back is for work in full swing of lathe when gap is open. The cone in the headstock has four steps for a 4-inch belt. The head spindle is 3 inches in diameter, and the front bearing 6 inches long. The countershaft has an iron cone and two friction pulleys 18 inches diameter by 4½ inches face, one of which should run 425 revolutions, and the other, to run the lathe backwards for largest work, should run 125 revolutions per minute. The face plate slips on to a feather, and is drawn back to the collar on the spindle by a rod passing through the hollow head spindle, and screwed into a nut recessed into the front of the face plate by means of the small hand wheel shown at the end of the headstock. The tool in the carriage is designed to be used on work up to 26 inches in diameter; and on larger work, up to 66 inches in diameter, the lathe is to run backwards, using the tool on the bar shown at the back of the lathe, which is supported on a bracket attached to the bed at the front end, and, at the other end, to the carriage, which is extended for that purpose; the projected end of the carriage being stiffened by a bracket to the under side, and gibbed to slide in a recess at the bottom of the lower bed. The tool on the carriage is used on face plate work to the full swing of the lathe. To open the gap, the top bed is moved on the lower bed by means of the screw and hand wheel shown at the end of the bed.

An 84-inch swing face plate lathe is shown in Fig. 560. The spindle is of steel. The bearings are 2⅞ inches by 6 inches, and 2⅝ inches by 4 inches. The cone, which is of iron and carefully balanced, has four steps for 4-inch belt. The largest step is 17½ inches in diameter. The face plate is 26 inches in diameter. The countershaft has an iron cone, self-oiling hangers, and two friction pulleys 18 inches diameter by 4 inches face, which should run at 110 and 425 revolutions per minute, giving eight changes of speed to accommodate work from 7 feet in diameter to the smallest that is likely to be required of the lathe. Attached to the headstock in front is a casting which supports a 2-inch shaft 8 feet long; and to this shaft are attached two other shafts 3 feet, and to these, one 8 feet long. These shafts are all adjustable, in and out, to bring the rests into proper position for the work in hand. A rest holder is furnished, with two hand turning rests 18 inches and 26 inches long; also a compound rest 16 inches long, with hand feed, which can be used either on the back or front side and face of the work. The compound rest, and the swivel bearings which support the shaft across the face of the work, are graduated in degrees, and allow the operation of the tool at any desired angle.

THE LODGE AND SHIPLEY ENGINE LATHE.—An example of this line of lathes is given in Figs. 1 and 2, Plate XXXVI.–I.

The lead screw is splined so that it may be used for a rod feed as well as for screw cutting.

Fig. 1 is an example, with a rise and fall of elevating rest. Fig. 2 illustrates the taper turning attachment. The carriage is gibbed to the bed its entire length. The bearing on the bed is not recessed, but has a full bearing from end to end, and the entire depth of V on the bed. The carriage is provided with a screw and clamp for locking it while using the cross-feed.

Both the upper and lower slides of the compound rest are fitted with taper gibs, which, besides being tapering, are tongued and grooved into the sides. The taper gibs are provided with only two screws, one front and one back, which take up the wear the entire length. The top slide has a long movement for angles, and is fitted with a screw of ten pitch. The screw is provided with an indexed micrometer divided into lines, each of which reads 2-1000th. The lower slide is provided with a micrometer divided into 64ths of an inch. When starting the cut, an exact diameter may be obtained without the use of calipers, by using the tailstock spindle as a gauge. For example, in the 18-inch lathe, secure the tool firmly in place, move it forward until the point touches the spindle; the tool is then set to turn a diameter of two inches. If smaller diameters are wanted, move forward by the micrometer the required amount, as explained. If larger diameters are wanted, move backward in the same manner, except that, in moving backward, a half turn more than required should be made, and then brought back to the proper place, in order that lost motion may not cause confusion.

The change for screw-cutting gears is mounted on a short shaft running in substantial bearings in the bed and directly

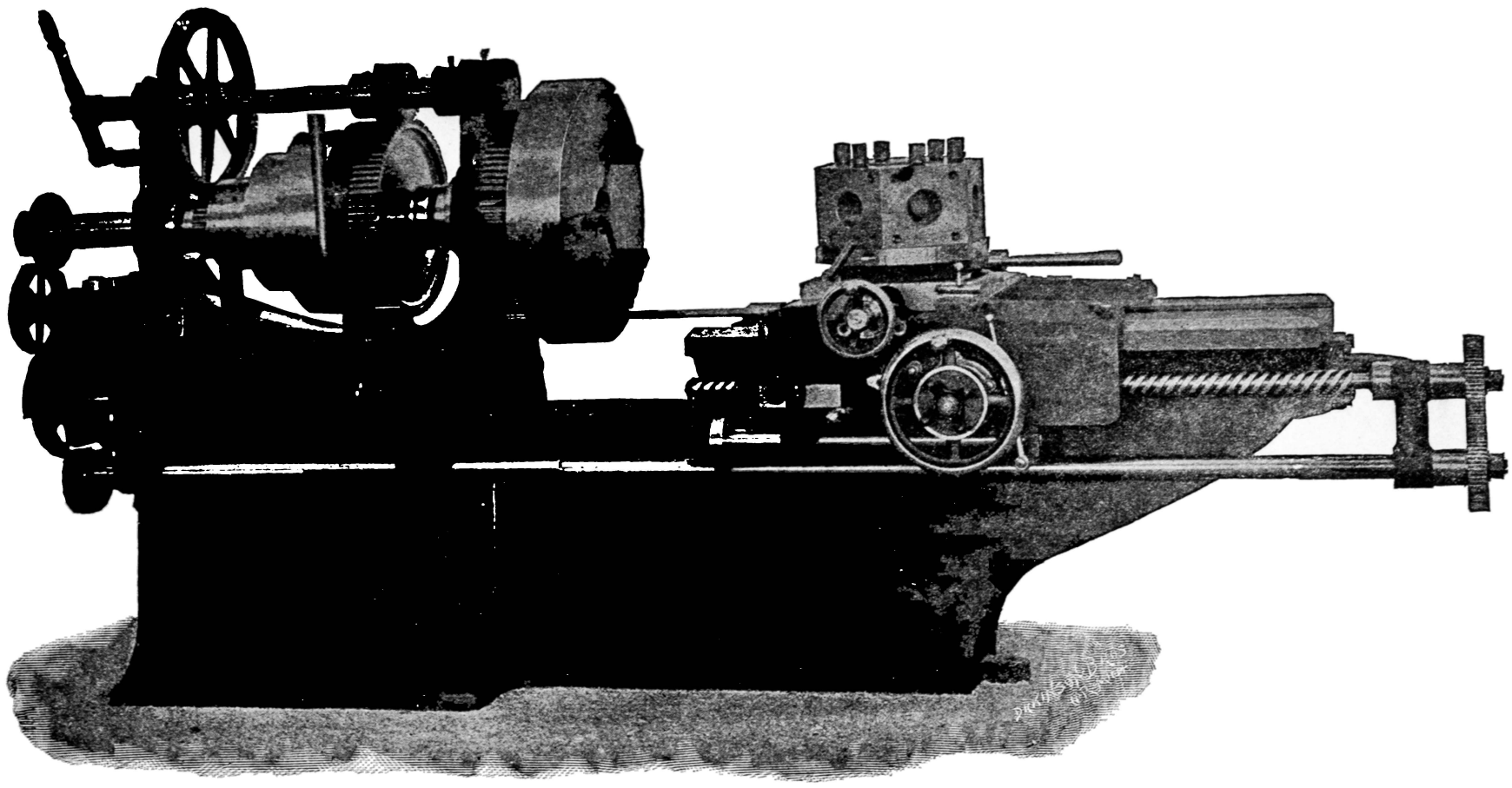

Fig. 1.

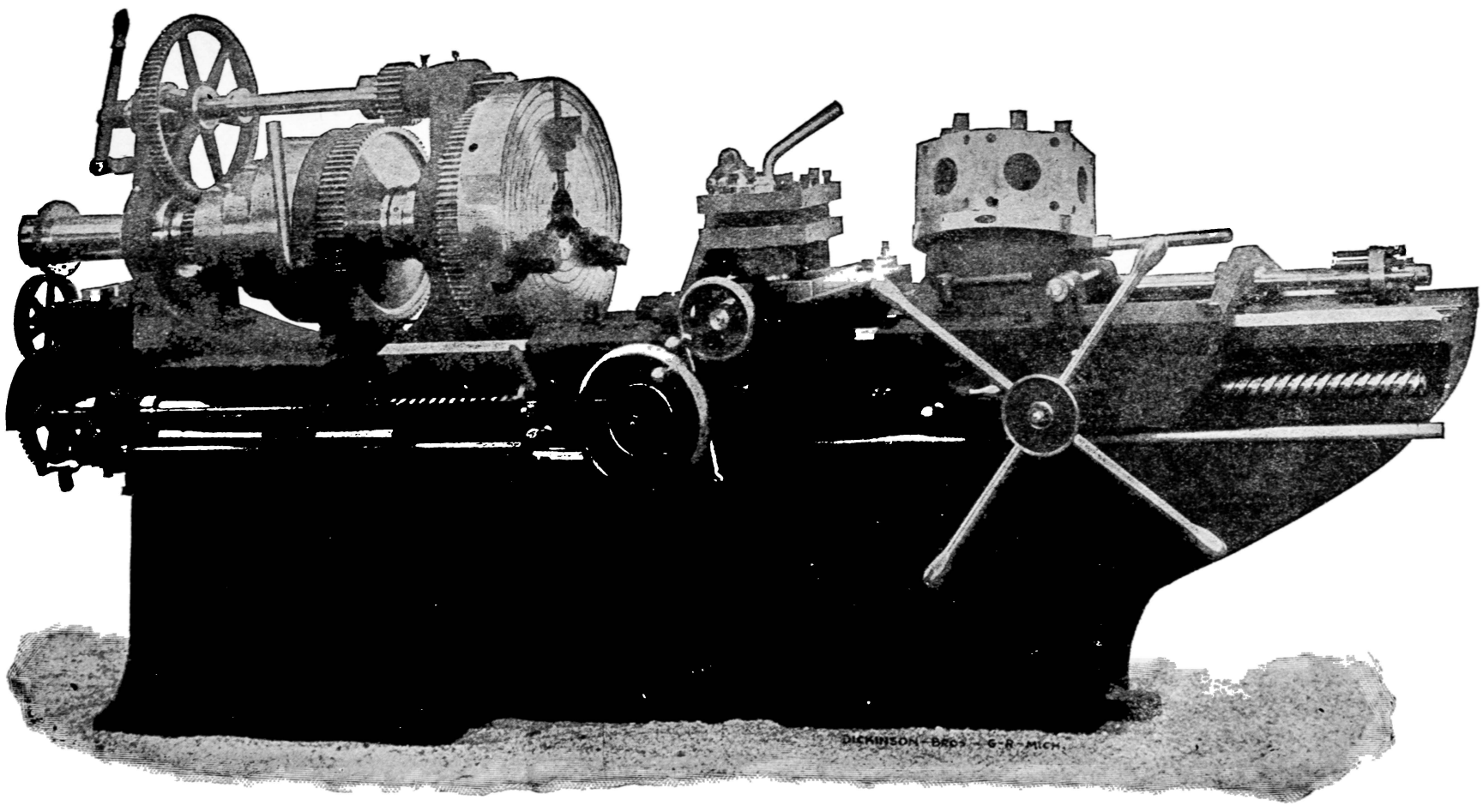

Fig. 2.

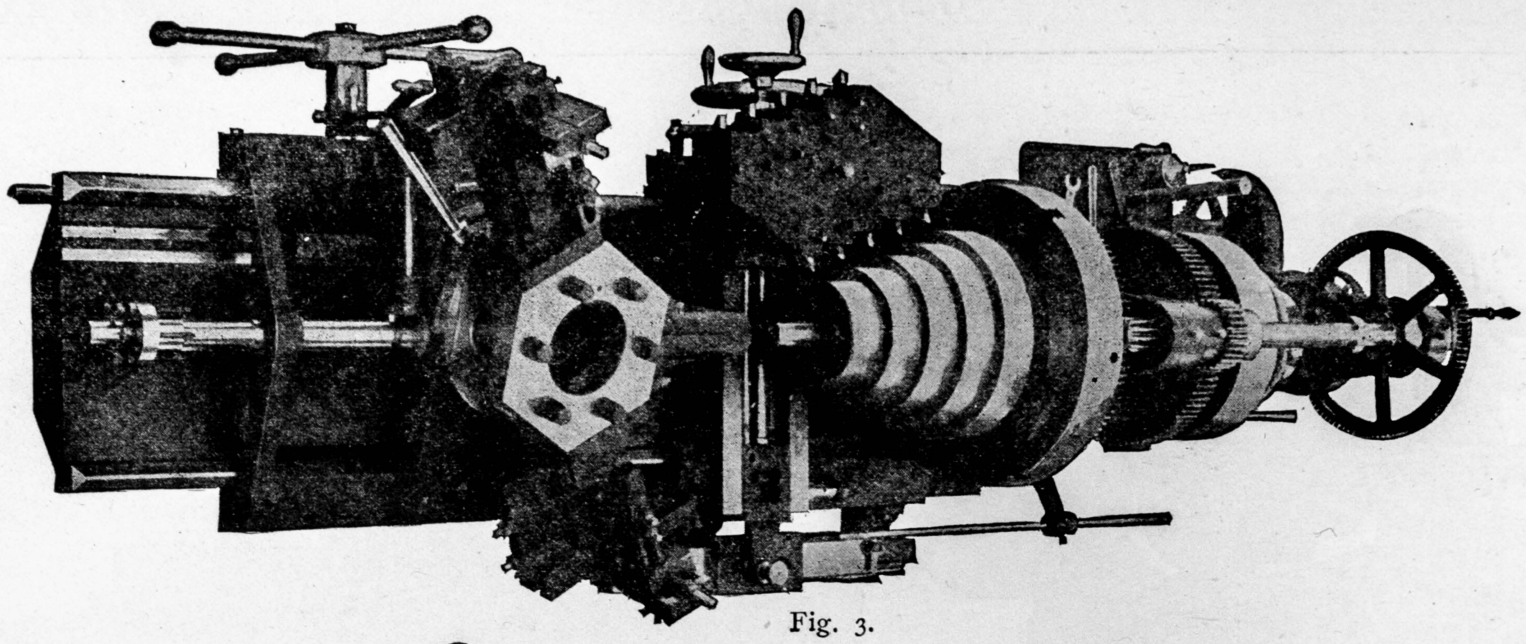

Fig. 3.

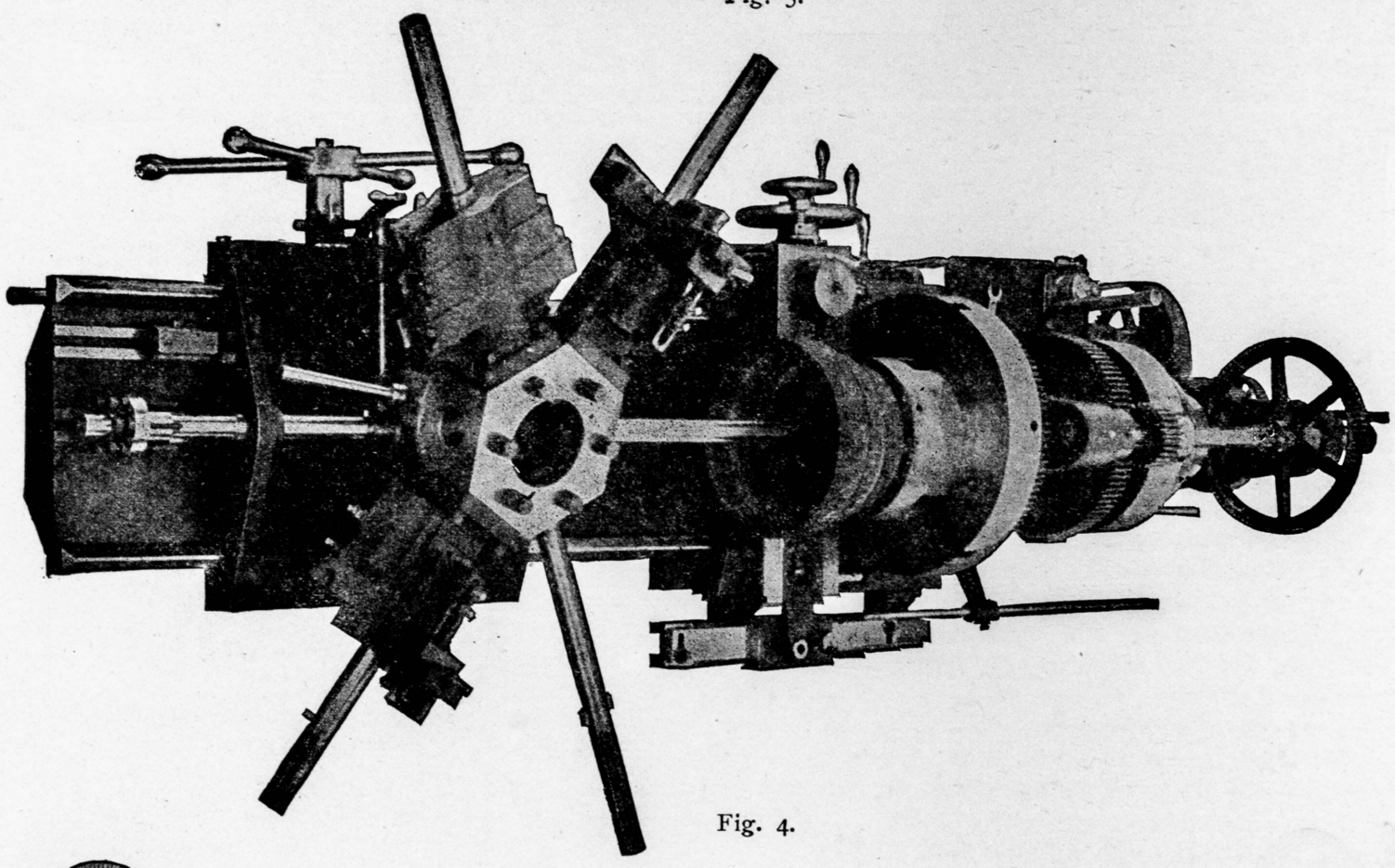

Fig. 4.

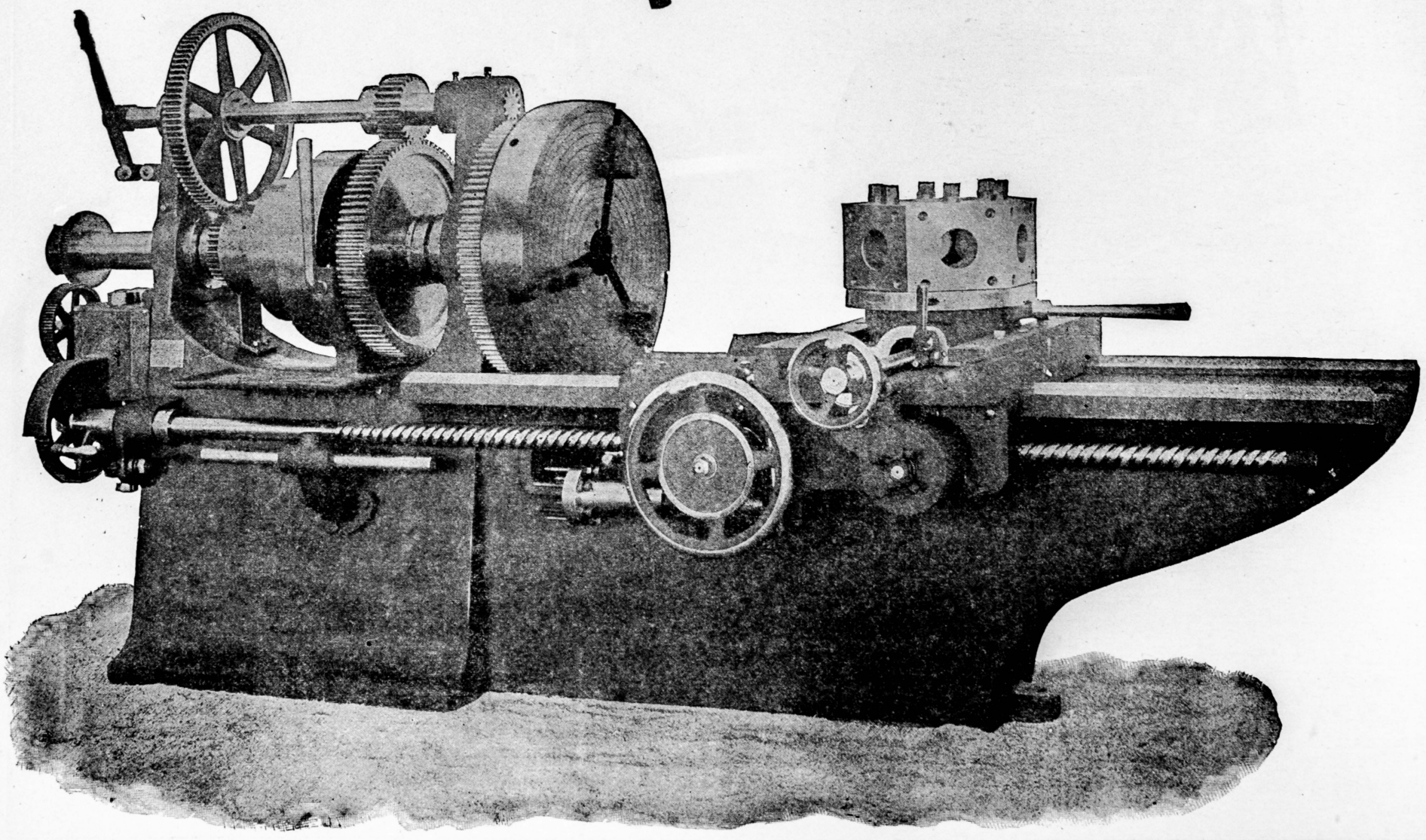

Fig. 5.

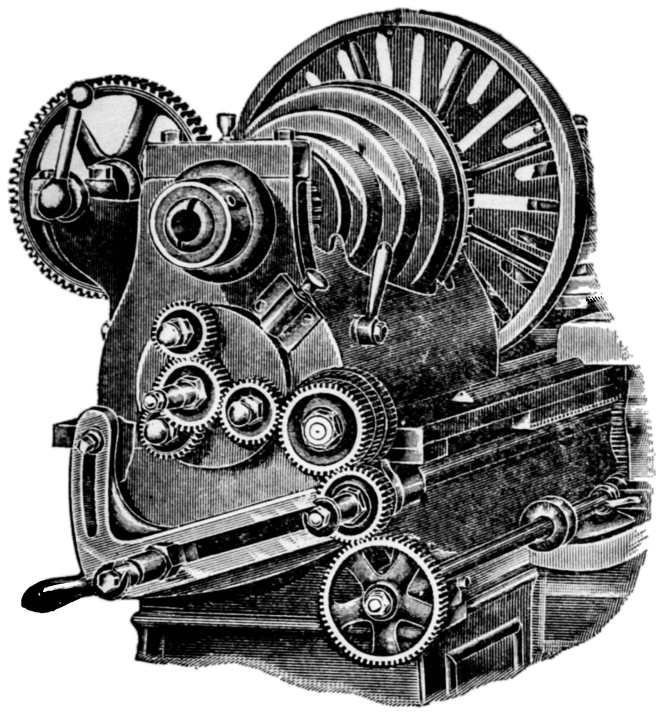

Fig. 553.

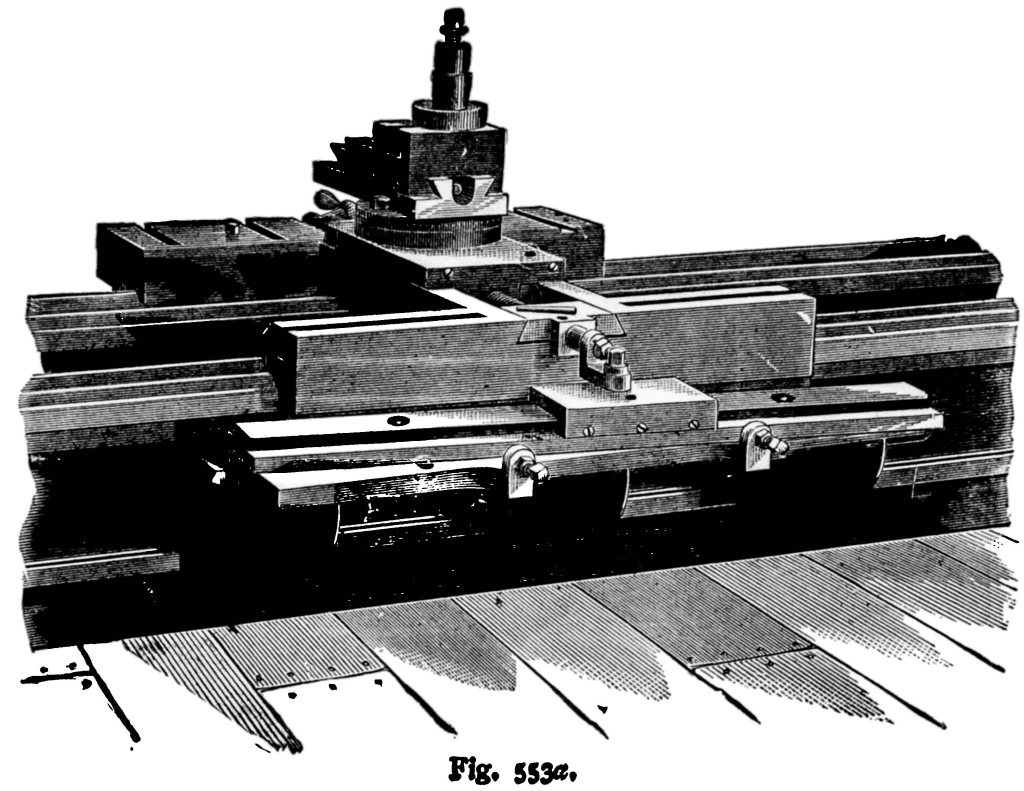

Fig. 553a.

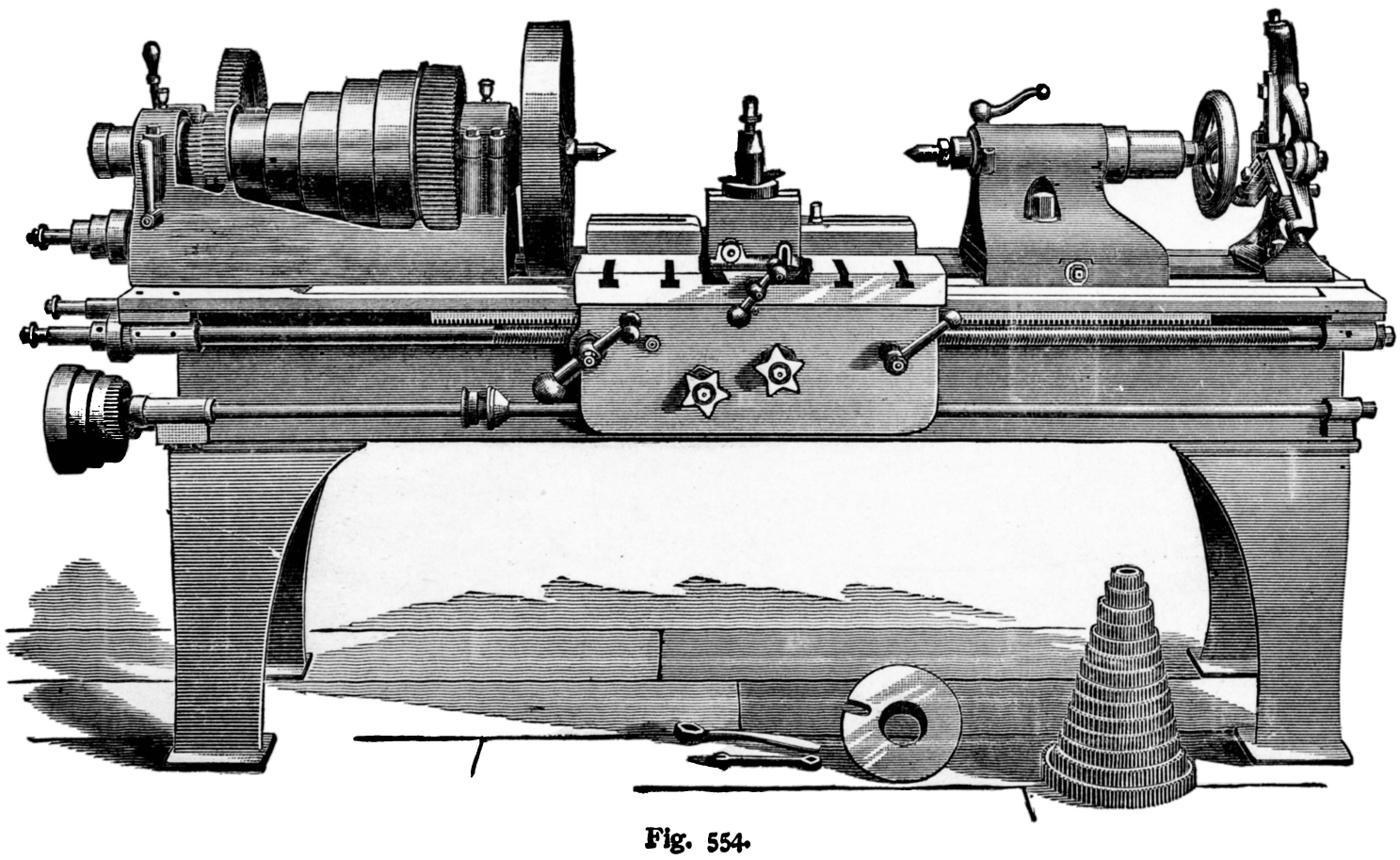

Fig. 554.

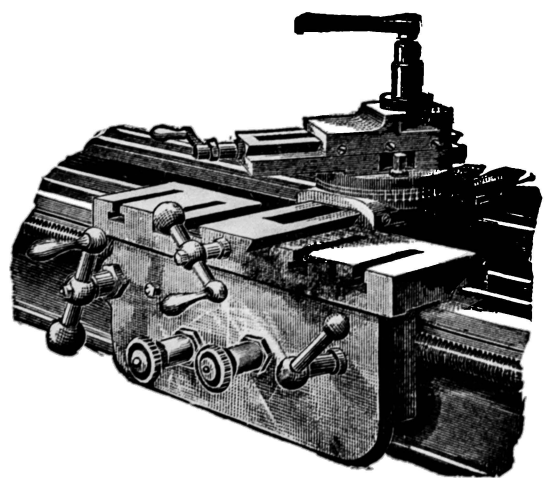

Fig. 555.

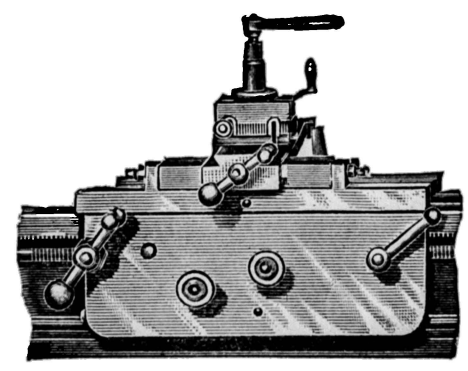

Fig. 556.

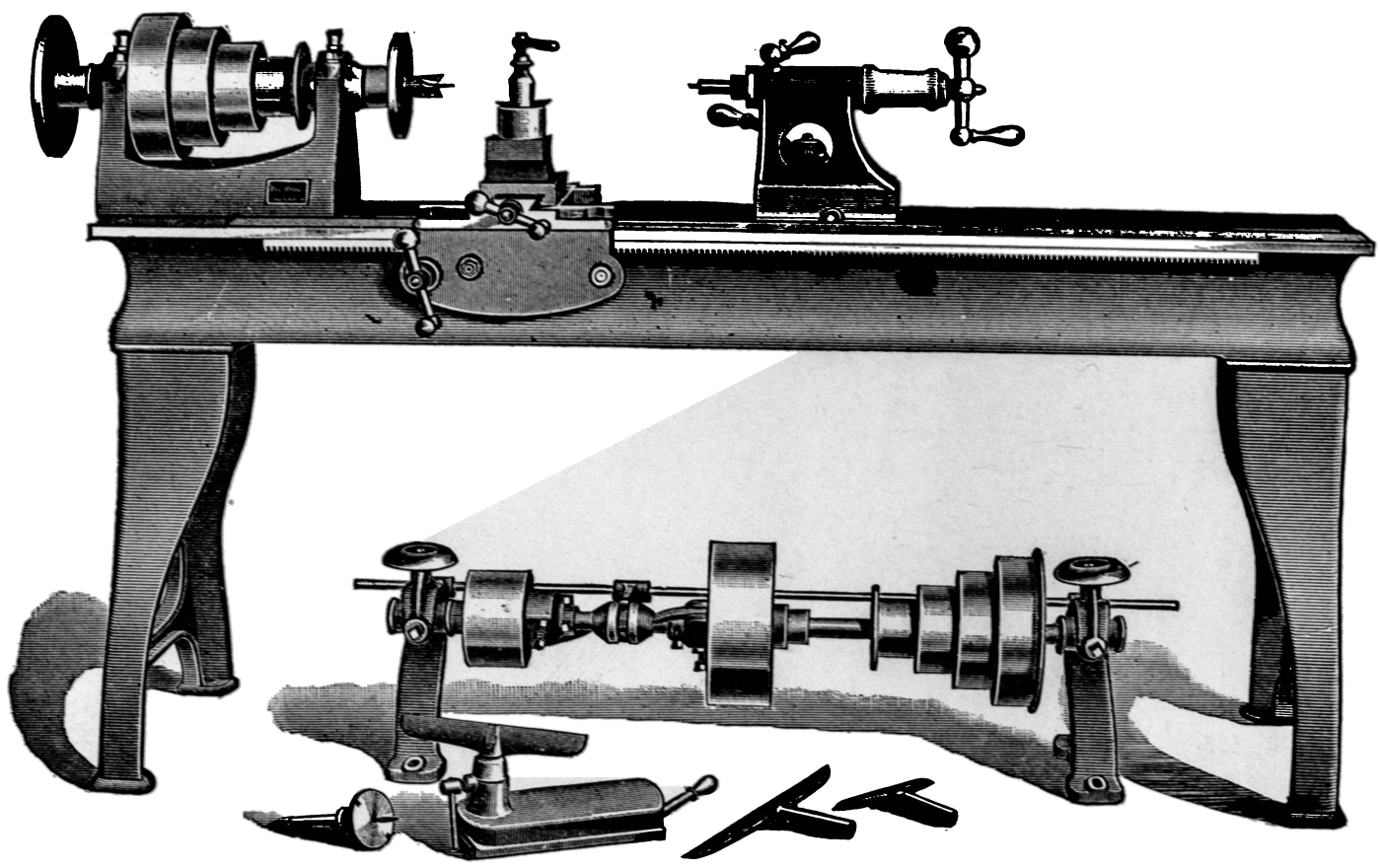

Fig. 557.

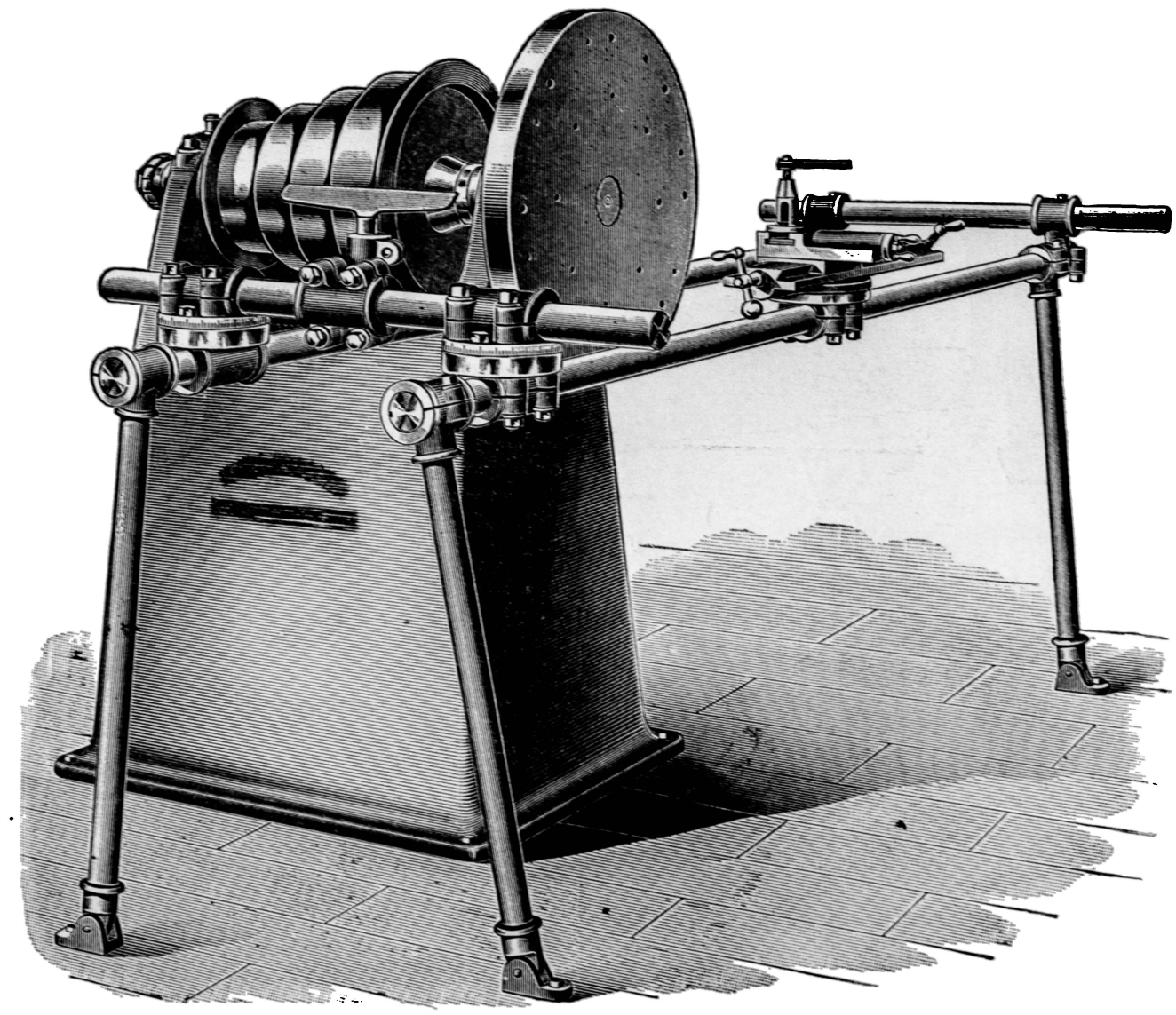

Fig. 558.

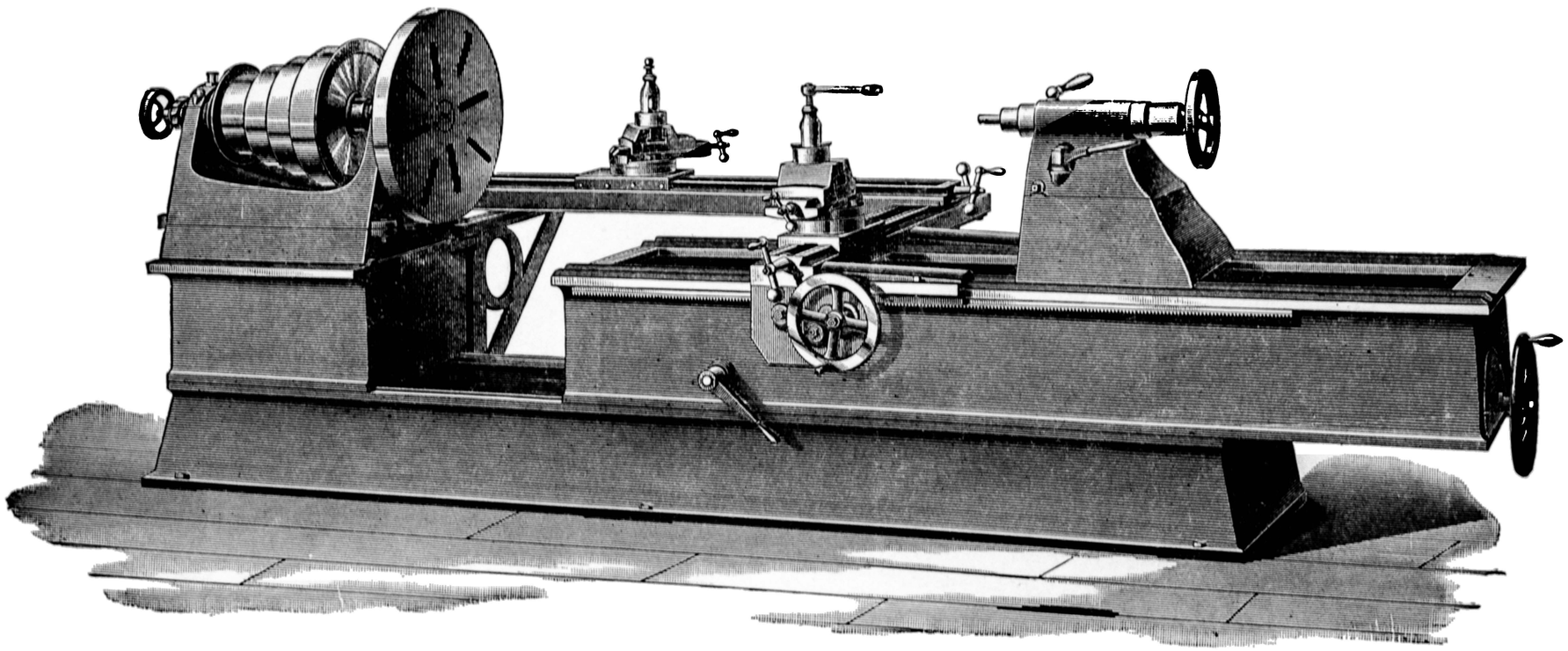

Fig. 559.

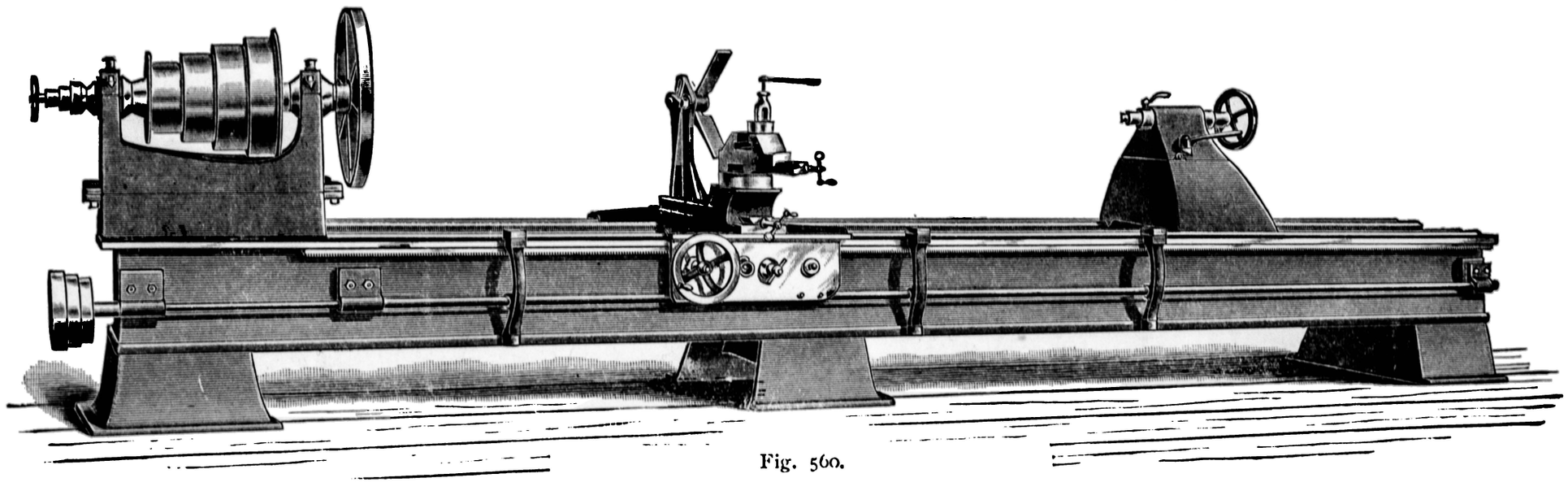

Fig. 560.

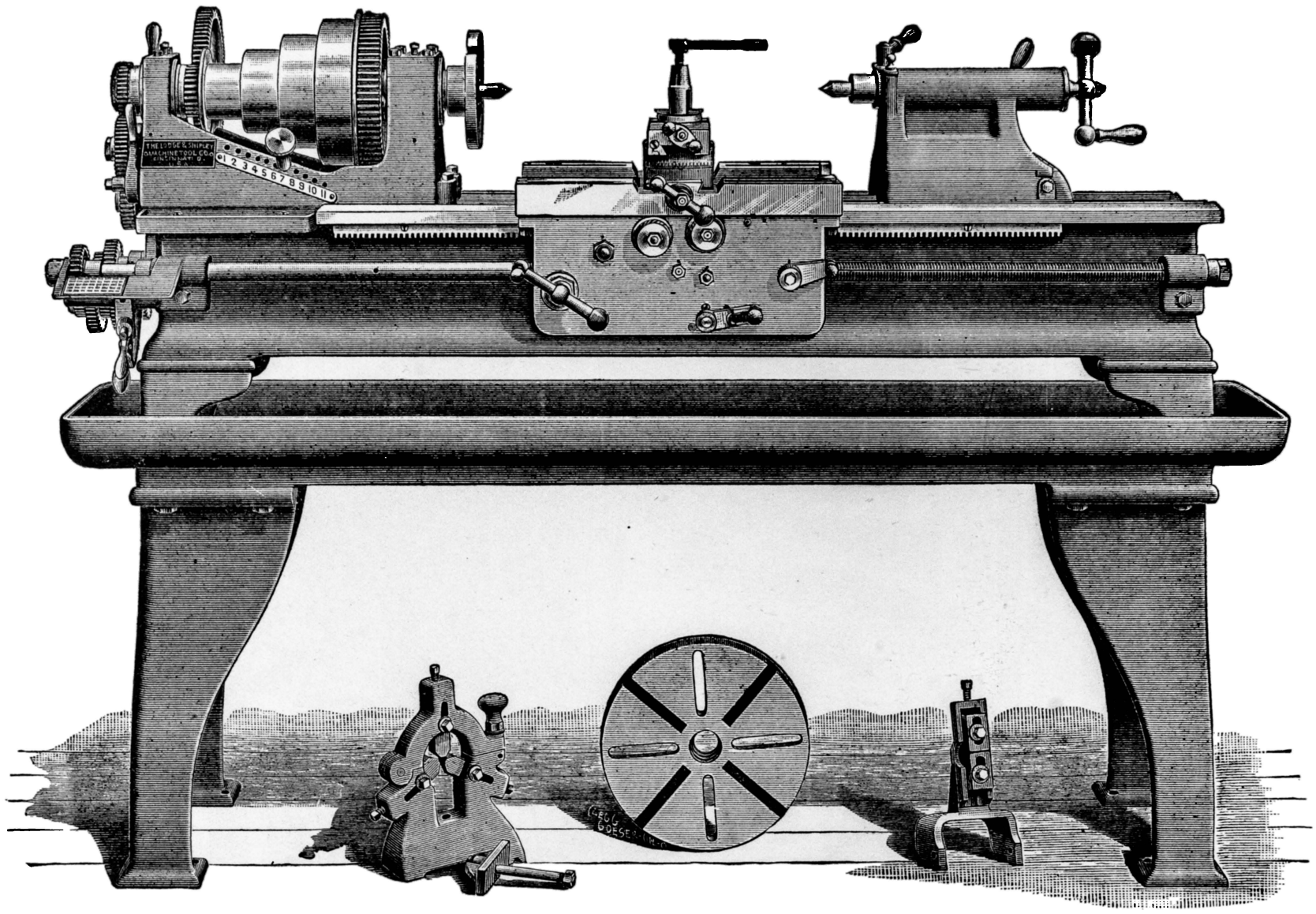
THE LODGE & SHIPLEY MACHINE TOOL CO.
CINCINNATI O.
1 2 3 4 5 6 7 8 9 10 11

Fig. 1.

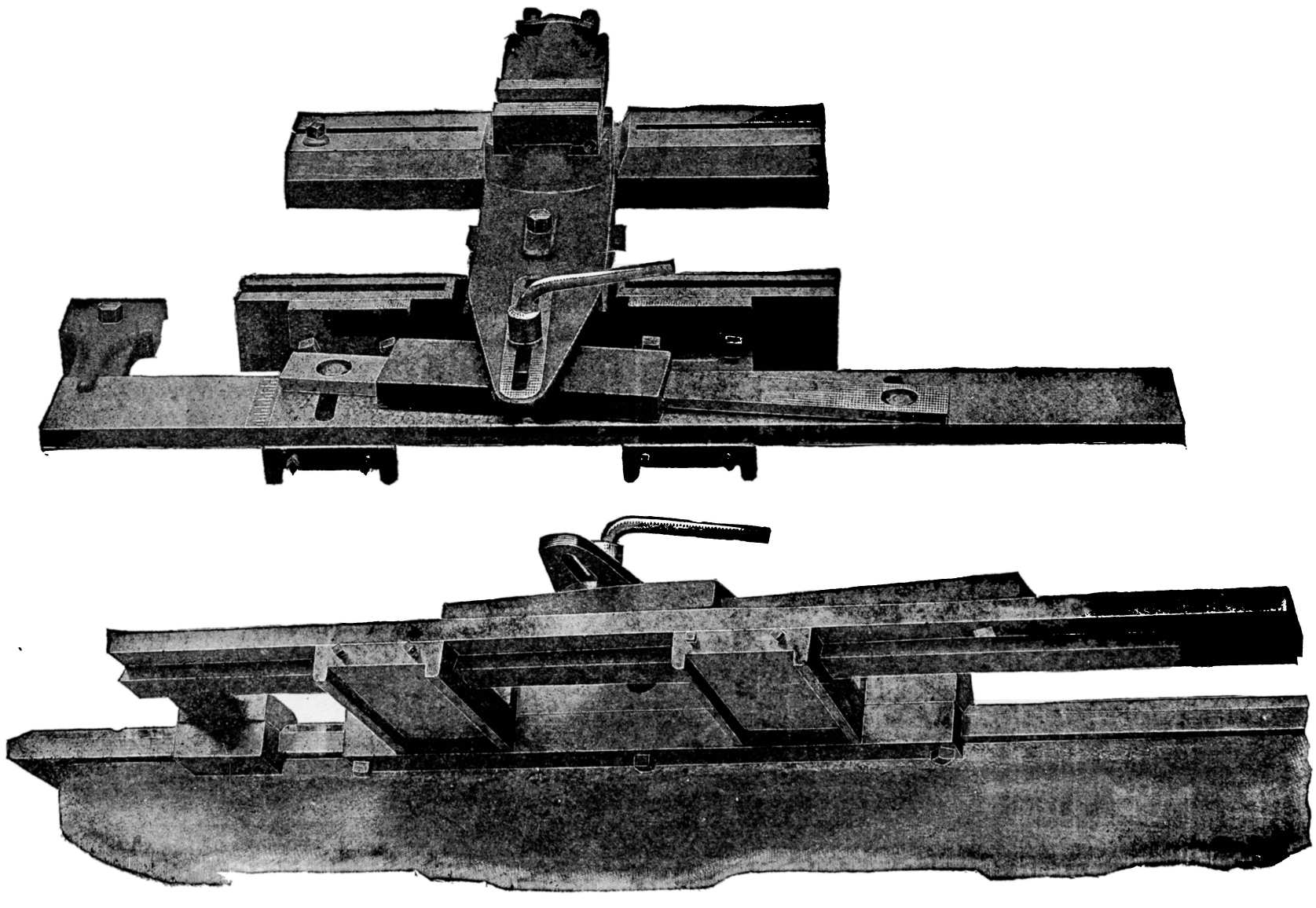

Fig. 2.

under the headstock. The knob shown in front of the head carries a gear that continually runs either right or left. This gear may be dropped into any one of the change gears instantly, and thus gives four times as many changes as there are change gears, because on the outer end of the change gear shaft are four gears, into any one of which the gear shown on the lead screw may engage.

None of the gears are removed to set the lathe for cutting different pitches of threads or for different rod feeds. A substantial and simple plate is used to change from right to left-hand screws. The index plate has the words "Threads," "Knob," on the upper line. Under the word "Threads" are the number of threads the lathe will cut; under the word "Knob" are the figures 1 to 10; thus, should the operator desire to cut any certain thread, he finds this on the index plate, engages his gear opposite to it, places the knob in the hole indicated on the plate, and starts the tool to work.

The taper attachment is changed from straight to taper by tightening or releasing one screw. When attached for taper work the sliding shoe connects directly with the tool rest and not with the screw, making its operation instantaneous. The nut is made to release and slide in a groove. The stud for the sliding shoe also engages into a groove, and to attach or detach requires nothing more or less than the releasing of one screw and tightening another, or *vice versa*.

The bracket carrying the taper attachment is bolted to and travels with the carriage, so that at whatever part of the bed the carriage may be the taper attachment can be instantly engaged.

Chapter VII.—DETAILS IN LATHE CONSTRUCTION.

ALTHOUGH in each class of lathe the requirements may be practically the same, yet there is a variety of different details of construction by means of which these requirements may be met or filled, and it may be profitable to enter somewhat into these requirements and the different constructions generally employed to meet them.

The cone spindle or live spindle of a lathe should be a close working fit to its boxes or bearings, so that it will not lift under a heavy cut, or lift and fall under a cut of varying pressure. This lifting and falling may occur even though the work be true, and the cut therefore of even depth all around the work, because of hard seams or spots in the metal. It is obvious that the bearings should form a guide, compelling the live spindle to revolve in a true circle and in a fixed plane, the axis of revolution being in line with the centre line of the tail spindle, and that means should be provided to maintain this alignment while preserving the fit, or, in other words, taking up the wear. The spindle journals must, to produce truly cylindrical work, be cylindrically true, or otherwise the axis of its revolution will change as it revolves, and this change will be communicated through the live centre to the work, or through the chuck plate to the work, as the case may be.

The construction of the bearings should be such that end motion to the spindle is prevented in as short a length of the spindle as possible, the thrust in either direction being resisted by the mechanism contained in one bearing.

Since the strain of the cut carried by the cutting tool of a lathe falls mainly upon the live centre end of the cone spindle, it is obvious that the bearing at that end has a greater tendency to wear.

In addition to this the weight of the cone itself is greatest at that end, and furthermore the weight of the face plate or chuck, and of the work, is carried mainly at that end. If, however, one journal and bearing wears more than the other, the spindle is thrown out of line with the lathe shears, and with the tail block spindle. The usual method of obviating this as far as possible is to give that end a larger journal-bearing area.

The direction in which this wear will take place depends in a great measure upon the kind of work done in the lathe; thus in a lathe running slowly and doing heavy work carried by chucks, or on the face plate, the wear would be downwards and towards the operator, the weight of the chuck, etc., causing the downward, and the resistance or work-lifting tendency of the cut causing the lateral wear. As a general rule the wear will be least in a lateral direction towards the back of the lathe, but the direction of wear is so variable that provision for its special prevention or adjustment is not usually made.

The cone pulley of a lathe should be perfectly balanced, otherwise at high speeds the lathe will shake or tremble from the unbalanced centrifugal motion, and the tremors will be produced to some extent on the work. The steps of the cone should be amply wide, so that it may have sufficient power, without overstraining the belt, to drive the heaviest cut the lathe is supposed to take without the aid of the back gear. In some cases, as in spinnings lathes, the order of the steps is reversed, the smallest step of the cone being nearest to the live centre, the object being to have the largest step on the left, and therefore more out of the way.

The steps of the cone should be so proportioned that the belt will shift from one to the other, and have the same degree of tension, while at the same time they should give a uniform graduation or variation of speed throughout, whether the lathe runs in single gear or with the back gear in. This is not usually quite the case, although the graduation is sufficiently accurate for practical purposes. The variation in the diameter of the steps of a lathe cone varies from an inch for lathes of about 12-inch swing, up to 2 inches for lathes of about 30-inch swing, and 3 inches for lathes of 5 or more feet of swing.

To enable the graduation of speed of the cone to be uniform throughout, while the tension of the belt is maintained the same on whatever step the cone may be, the graduation of the steps may be varied, and this graduation may be so proportioned as to answer all practical purposes if the overhead or countershaft cone and that on the lathe are alike.

The following on this subject is from the pen of Professor D. E. Klein, of Yale College:

"The numbers given in the following tables are the differences between the diameters of the adjacent steps on either cone pulley, and are accurate within half a hundredth of an inch, which is a degree of accuracy sufficient for practical purposes.

By simply omitting a step at each end of the cone, the two tables given will be found equally well adapted for determining the diameters of cones having four and three steps respectively.

The following are examples in the use of the tables: Suppose the centres of a pair of pulley shafts to be 60 inches apart, and that the difference of diameter between the adjacent steps is to be as near to 2½ inches as can be, to obtain a uniformity of speed graduation and belt tension, also that each cone is to have six steps, the smallest of which is to be of five inches diameter.

To find the diameters for the remaining steps, we look in Table I. (corresponding to cone pulleys with six steps), under 60 in. and opposite 2½ in. and obtain the differences,

2·37 2·43 2·50 2·57 2·63

Each of these differences is *subtracted* from the *larger* diameter of the two adjacent steps to which it corresponds, thus:

17·50 = 1st step.
Difference of 1st and 2nd = 2·37
15·13 = 2nd ,,
,, 2nd ,, 3rd = 2·43
12·70 = 3rd ,,
,, 3rd ,, 4th = 2·50
10·20 = 4th ,,
,, 4th ,, 5th = 2·57
7·63 = 5th ,,
,, 5th ,, 6th = 2·63
5·00 = 6th ,,

EXAMPLE 2. If we suppose the same conditions as in Example 1, with the exception that each cone is to have four steps instead of six, the largest diameter will, in this case, equal 12½ in., and we may obtain the remaining diameters by omitting the end differences of the above example, and then subtracting the remaining differences as follows:

12·50 = 2nd step.
Difference of 2nd and 3rd = 2·43
10·07 = 3rd ,,
,, 3rd ,, 4th = 2·50
7·57 = 4th ,,
, 4th ,, 5th = 2·57
5·00 = 5th ,,

The 2nd, 3rd, 4th, and 5th steps of the table correspond respectively to the 1st, 2nd, 3rd, and 4th steps of the cone having but four steps. If the smallest diameter had not been assumed equal to 5 in. we might have dropped a step at each end of the six-step cone of the preceding example, and employed the remaining four diameters, 15·13 in. 12·70 in. 10·20 in. and 7·63 in. for one four-step cone.

The present and the previous examples show that we can assume the size of the smallest step anything that we please,

I.—TABLE FOR FINDING CONE PULLEY DIAMETERS WHEN THE TWO PULLEYS ARE CONNECTED BY AN OPEN BELT, AND ARE EXACTLY ALIKE.

The numbers given in table are the differences between the diameters of the adjacent steps on either cone pulley, and can be employed when there are either six or four steps on a cone. When there are six steps, the largest is the first, and the smallest the sixth step of the table. When there are four steps, the largest is the second, and the smallest the fifth step of the table.

Average difference between the adjacent steps.	Adjacent steps, whose difference is given in table.	Distance between the Centres of Cone Pulleys.											
		10 inches.	20 inches.	30 inches.	40 inches.	50 inches.	60 inches.	70 inches.	80 inches.	90 inches.	100 inches.	120 inches.	240 inches.
1 inch	1st and 2nd	0·87	0·94	0·96	0·97	0·98	0·98	0·98	0·98	0·99	0·99	0·99	1·00
	2nd ,, 3rd	0·94	0·97	0·98	0·98	0·99	0·99	0·99	0·99	0·99	0·99	1·00	1·00
	3rd ,, 4th	1·00	1·00	1·00	1·00	1·00	1·00	1·00	1·00	1·00	1·00	1·00	1·00
	4th ,, 5th	1·06	1·03	1·02	1·02	1·01	1·01	1·01	1·01	1·01	1·01	1·00	1·00
	5th ,, 6th	1·13	1·06	1·04	1·03	1·02	1·02	1·02	1·02	1·01	1·01	1·01	1·00
1½ inch	1st and 2nd	1·21	1·36	1·40	1·43	1·44	1·45	1·46	1·46	1·47	1·47	1·48	1·49
	2nd ,, 3rd	1·36	1·43	1·45	1·46	1·47	1·48	1·48	1·48	1·49	1·49	1·49	1·49
	3rd ,, 4th	1·50	1·50	1·50	1·50	1·50	1·50	1·50	1·50	1·50	1·50	1·50	1·50
	4th ,, 5th	1·64	1·57	1·55	1·54	1·53	1·52	1·52	1·52	1·51	1·51	1·51	1·51
	5th ,, 6th	1·79	1·64	1·60	1·57	1·56	1·55	1·54	1·54	1·53	1·53	1·52	1·51
2 inches	1st and 2nd	1·47	1·74	1·83	1·87	1·90	1·92	1·93	1·93	1·94	1·95	1·96	1·98
	2nd ,, 3rd	1·74	1·87	1·92	1·93	1·95	1·96	1·96	1·97	1·97	1·97	1·98	1·99
	3rd ,, 4th	2·00	2·00	2·00	2·00	2·00	2·00	2·00	2·00	2·00	2·00	2·00	2·00
	4th ,, 5th	2·26	2·13	2·08	2·07	2·05	2·04	2·04	2·03	2·03	2·03	2·02	2·01
	5th ,, 6th	2·53	2·26	2·17	2·13	2·10	2·08	2·07	2·07	2·06	2·05	2·04	2·02
2½ inches	1st and 2nd	1·66	2·10	2·23	2·30	2·34	2·37	2·39	2·40	2·41	2·42	2·43	2·47
	2nd ,, 3rd	2·10	2·30	2·37	2·40	2·42	2·43	2·44	2·45	2·46	2·46	2·47	2·49
	3rd ,, 4th	2·50	2·50	2·50	2·50	2·50	2·50	2·50	2·50	2·50	2·50	2·50	2·50
	4th ,, 5th	2·90	2·70	2·63	2·60	2·58	2·57	2·56	2·55	2·54	2·54	2·53	2·51
	5th ,, 6th	3·34	2·90	2·77	2·70	2·66	2·63	2·61	2·60	2·59	2·58	2·57	2·53
3 inches	1st and 2nd	1·76	2·42	2·62	2·71	2·77	2·81	2·84	2·86	2·87	2·88	2·90	2·95
	2nd ,, 3rd	2·42	2·71	2·81	2·86	2·88	2·90	2·92	2·93	2·94	2·94	2·95	2·98
	3rd ,, 4th	3·00	3·00	3·00	3·00	3·00	3·00	3·00	3·00	3·00	3·00	3·00	3·00
	4th ,, 5th	3·58	3·29	3·19	3·14	3·12	3·10	3·08	3·07	3·06	2·06	3·05	3·02
	5th ,, 6th	4·24	3·58	3·38	3·29	3·23	3·19	3·16	3·14	3·13	3·12	3·10	3·05
4 inches	1st and 2nd		3·95	3·31	3·49	3·59	3·66	3·71	3·75	3·78	3·80	3·83	3·91
	2nd ,, 3rd	2·94	3·49	3·66	3·75	3·80	3·83	3·85	3·87	3·88	3·89	3·91	3·96
	3rd ,, 4th	4·00	4·00	4·00	4·00	4·00	4·00	4·00	4·00	4·00	4·00	4·00	4·00
	4th ,, 5th	5·06	4·51	4·34	4·25	4·20	4·17	4·15	4·13	4·12	4·11	4·09	4·04
	5th ,, 6th		5·05	4·69	4·51	4·41	4·34	4·29	4·25	4·22	4·20	4·17	4·09
5 inches	1st and 2nd		3·33	3·92	4·20	4·36	4·47	4·55	4·60	4·64	4·68	4·74	4·87
	2nd ,, 3rd	3·31	4·19	4·47	4·60	4·68	4·74	4·77	4·80	4·82	4·84	4·86	4·93
	3rd ,, 4th	5·00	5·00	5·00	5·00	5·00	5·00	5·00	5·00	5·00	5·00	5·00	5·00
	4th ,, 5th	6·69	5·81	5·53	5·40	5·32	5·26	5·23	5·20	5·18	5·16	5·14	5·07
	5th ,, 6th		6·67	6·09	5·80	5·64	5·53	5·45	5·40	5·36	5·32	5·26	5·13
6 inches	1st and 2nd		3·52	4·42	4·83	5·08	5·23	5·34	5·42	5·49	5·55	5·62	5·80
	2nd ,, 3rd		4·83	5·23	5·42	5·54	5·62	5·67	5·71	5·75	5·77	5·81	5·90
	3rd ,, 4th		6·00	6·00	6·00	6·00	6·00	6·00	6·00	6·00	6·00	6·00	6·00
	4th ,, 5th		7·17	6·77	6·58	6·46	6·38	6·33	6·29	6·25	6·23	6·19	6·10
	5th ,, 6th		8·48	7·58	7·17	6·92	6·77	6·66	6·58	6·51	6·45	6·38	6·20

and, other things being equal, can make the required cones large or small.

EXAMPLE 3. Let distance apart of the centres = 30 in. the average difference between adjacent steps = 2 in. the diameter of the smallest step = 4 in., and the number of steps on each of the cones = 5. The largest step will then equal 12 in., and from Table II., under 30 in. and opposite 2 in., we obtain the differences

1·87 1·96 2·04 2·13

and then subtracting as before we get the required diameters

12 in. 10·13 in. 8·17 in. 6·13 in. 4 in.

EXAMPLE 4. Let the conditions be as in the preceding example, the cone pulley having, however, three steps instead of five, the largest diameter will then equal 8 in.; and by dropping the end differences and subtracting

$$\begin{aligned} &8{\cdot}00 = \text{2nd step.} \\ \text{Difference of 2nd and 3rd} = &\ 1{\cdot}96 \\ \hline &6{\cdot}04 = \text{3rd} \quad ,, \\ ,, \quad \text{3rd} \quad ,, \quad \text{4th} = &\ 2{\cdot}04 \\ \hline &4{\cdot}00 = \text{4th} \quad ,, \end{aligned}$$

we get the diameters 8 in., 6·04, and 4 in., which correspond respectively to 2nd, 3rd, and 4th steps of the table, and to the 1st, 2nd, and 3rd steps of the three-step cone.

EXAMPLE 5. Let the distance apart of the centres be 60 in., the average difference between the adjacent steps be $2\frac{1}{8}$ in., the smallest step 7 in. and the number of steps = 5. The largest step will then be 7 in. + $(4 \times 2\frac{1}{8}) = 15\frac{1}{2}$ inches.

Now an inspection of Table II. will show that it contains no horizontal lines corresponding to the average difference $2\frac{1}{8}$ inches, we cannot, therefore, as heretofore, obtain the required differences directly, but must interpolate as follows: since $2\frac{1}{8}$ inches is quarter way between 2 inches and $2\frac{1}{2}$ inches, the numbers corresponding to $2\frac{1}{8}$ inches (for any given distance apart of the centres), will be quarter way between the numbers of the table corresponding to 2 inches and $2\frac{1}{2}$ inches.

Thus, in Table II., we have under 60 inches,

and opposite $2\frac{1}{2}$ in.:	2·40	2·47	2·53	2·60
,, 2	1·93	1·98	2·02	2·07
	·47	·49	·51	·53

Dividing these differences by 4, we get:

·12 ·12 ·13 ·13

to which we add,

1·93 1·98 2·02 2·07

II.—TABLE FOR FINDING CONE PULLEY DIAMETERS WHEN THE TWO PULLEYS ARE CONNECTED BY AN OPEN BELT, AND ARE EXACTLY ALIKE.

The numbers given in table are the differences between the diameters of the adjacent steps on either cone pulley, and can be employed when there are either five or three steps on a cone.

Average difference between the adjacent steps.	Adjacent steps, whose difference is given in table.	Distance Between the Centres of the Cone Pulleys.											
		10 inches.	20 inches.	30 inches.	40 inches.	50 inches.	60 inches.	70 inches.	80 inches.	90 inches.	100 inches.	120 inches.	140 inches.
1 inch	1st and 2nd	0·90	0·95	0·97	0·98	0·98	0·98	0·99	0·99	0·99	0·99	0·99	1·00
	2nd „ 3rd	0·97	0·98	0·99	0·99	0·99	0·99	0·99	1·00	1·00	1·00	1·00	1·00
	3rd „ 4th	1·03	1·02	1·01	1·01	1·01	1·01	1·01	1·00	1·00	1·00	1·00	1·00
	4th „ 5th	1·10	1·05	1·03	1·02	1·02	1·02	1·01	1·01	1·01	1·01	1·01	1·00
1½ inch	1st and 2nd	1·28	1·39	1·43	1·45	1·46	1·46	1·47	1·47	1·48	1·48	1·48	1·49
	2nd „ 3rd	1·43	1·46	1·48	1·48	1·48	1·49	1·49	1·49	1·49	1·49	1·49	1·49
	3rd „ 4th	1·57	1·54	1·52	1·52	1·52	1·51	1·51	1·51	1·51	1·51	1·51	1·51
	4th „ 5th	1·72	1·61	1·57	1·55	1·54	1·54	1·53	1·53	1·52	1·52	1·52	1·51
2 inches	1st and 2nd	1·61	1·81	1·87	1·90	1·92	1·93	1·94	1·95	1·96	1·96	1·97	1·98
	2nd „ 3rd	1·87	1·94	1·96	1·97	1·97	1·98	1·98	1·98	1·99	1·99	1·99	1·99
	3rd „ 4th	2·13	2·06	2·04	2·03	2 03	2·02	2·02	2·02	2·01	2·01	2·01	2·01
	4th „ 5th	2·39	2·19	2·13	2·10	2·08	2·07	2·06	2·05	2·04	2·04	2·03	2·02
2½ inches	1st and 2nd	1·89	2·20	2·30	2·35	1·38	2·40	2·41	2·42	2·43	2·44	2·45	2·47
	2nd „ 3rd	2·30	2·40	2·43	2·45	2·46	2·47	2·47	2·47	2·48	2·48	2·48	2·49
	3rd „ 4th	2·70	2·60	2·57	2·55	2·54	2·53	2 53	2·53	2·52	2·52	2·52	2·51
	4th „ 5th	3·11	2·80	2·70	2·65	2·62	2·60	2·59	2·58	2·57	2·56	2·55	2·53
3 inches	1st and 2nd	2·10	2·57	2·71	2·78	2·83	2·86	2·87	2·89	2·90	2·91	2·93	2·96
	2nd „ 3rd	2·71	2·86	2·90	2·93	2·94	2·95	2·96	2·96	2·97	2·97	2·98	2·99
	3rd „ 4th	3·29	3·14	3·10	3·07	3·06	3·05	3·04	3 04	3·03	3·03	3·02	3·01
	4th „ 5th	3·90	3·43	3·29	3·22	3·17	3·14	3·13	3·11	3·10	3·09	3·07	3·04
4 inches	1st and 2nd		3·22	3·49	3·62	3·69	3·75	3·78	3·81	3·83	3·84	3·87	3·94
	2nd „ 3rd	3·48	3·74	3·83	3·87	3·90	3·91	3·92	3·94	3·94	3·95	3·96	3·98
	3rd „ 4th	4·52	4·26	4·17	4·13	4·10	4·09	4·08	4·06	4·06	4·05	4·04	4·02
	4th „ 5th		4·78	4·51	4·38	4·31	4·25	4·22	4·19	4·17	4·16	4·13	4·06
5 inches	1st and 2nd		3·77	4·20	4·40	4·52	4·60	4·66	4·71	4·73	4·76	4·80	4·90
	2nd „ 3rd	4·19	4·60	4·73	4·80	4·84	4·87	4·89	4·90	4·91	4·92	4·93	4·96
	3rd „ 4th	5·81	5·40	5·27	5·20	5·16	5·13	5·11	5·10	5·09	5·08	5·07	5·04
	4th „ 5th		6·23	5·80	5·60	5·48	5·40	5·34	5·29	5·27	5·24	5·20	5·10
6 inches	1st and 2nd		4·21	4·83	5·13	5·31	5·42	5·51	5.57	5·62	5·66	5·71	5·86
	2nd „ 3rd	4·82	5·42	5·62	5·71	5·77	5·81	5·83	5·86	5·87	5·88	5·90	5·95
	3rd „ 4th	7·18	6·58	6·38	6·29	6·23	6·19	6·17	6·14	6·13	6·12	6·10	6·05
	4th „ 5th		7·79	7·17	6·87	6·69	6·58	6·49	6·43	6·38	6·34	6·29	6·14

and get for the differences corresponding to 2⅛ inches

2·05 2·10 2·15 2·20

and subtracting as before,

difference of 1st and 2nd = 15·5 − 2·05 = 13·45 = 1st step.

„ 2nd „ 3rd = 13·45 − 2·10 = 11·35 = 2nd „

„ 3rd „ 4th = 11·35 − 2·15 = 9·20 = 3rd „

„ 4th „ 5th = 9·20 − 2·20 = 7·00 = 4th „

Thus far, however, we have considered only the case where the two cone pulleys were exactly alike. Now although this case occurs much more frequently than the case in which the cone pulleys are unlike, it is nevertheless true that unlike cone pulleys occur with sufficient frequency to make it desirable that convenient means be established for obtaining the diameters of their steps rapidly and accurately, and Table III. was calculated by the writer for this purpose; its accuracy is more than sufficient for the requirements of practice, the numbers in the table being correct to within a unit of the fourth decimal place (*i.e.* within ·0001). It should be noticed that the tabular quantities are not the diameters of the steps, but these diameters divided by the distance between the centres of the cone pulleys; in other words, the tabular quantities are the effective diameters of the steps only when the centres of the pulleys are a unit's distance apart. By thus expressing the tabular quantities in terms of the distance apart of the axis, the table becomes applicable to all cone pulleys whatever their distance from each other, the effective diameters of the steps being obtained by multiplying the proper tabular quantities by the distance between the centres of the pulleys.

Before describing and applying the table, we will call attention to the term "effective" diameter. The effective radius—as is well known—extends from the centre of the pulley to the centre of the belt; the effective diameter, being twice this effective radius, must also equal the actual diameter plus thickness of belt.

The table is so arranged that the diameter (divided by distance between centres) of one step of a belted pair will always be found in the extreme right-hand column; while its companion step will be found on the same horizontal line, and in that vertical column of the table corresponding to the length of belt employed. For example, if column 14 of the table corresponded to the length of belt employed, some of the possible pairs of diameters would be as follows:

·7118	·5813	·42	·2164	·0474
·06	·24	·42	·60	·72

The upper row of this series of pairs being taken from column 14, and the lower row from the extreme right-hand column, the numbers in each pair being on the same horizontal line. If the distance between the centers of the pulleys were 60 ins. the effective diameters of the steps corresponding to the above pairs would be:

42·71	34·88	25·2	12·98	2·84 ins.
3·6	14·4	25·2	36·0	43·20

being obtained by multiplying the first series of pairs by 60; the length of belt which would be equally tight on each of these pairs would be 3·3195 × 60 ins. = 199·17 ins.

III.—TABLE FOR FINDING THE EFFECTIVE DIAMETERS OF THE STEPS OF CONE PULLEYS, WHEN THE PULLEYS ARE CONNECTED BY AN OPEN BELT AND ARE UNLIKE.

Each vertical cone of the table corresponds to a given length of belt, and the numbers in these columns are the required effective diameters of the steps when the centres of the pulleys are a Unit's distance apart.

Length of Belt when the Centres of the Cone Pulleys are a Unit's Distance Apart.																	Assumed diameter of steps, divided by distance between the centres of ConePulleys
2·0942	2·2827	2·3770	2·4712	2·5655	2·6597	2·7540	2·8482	2·9425	3·0367	3·1310	3·2252	3·3195	3·4137	3·5080	3·6022	3·6965	
1	3	4	5	6	7	8	9	10	11	12	13	14	15	16	17	18	
·0594	·1750	·2313	·2867	·3413	·3950	·4479	·5000	·5514	·6020	·6518	·7010	·7495	·7974	·8447	·8913	·9373	0·00
·03	·1477	·2050	·2613	·3167	·3713	·4250	·4779	·5300	·5814	·6320	·6818	·7310	·7795	·8274	·8747	·9213	0·03
	·1194	·1777	·2350	·2913	·3467	·4013	·4550	·5079	·5600	·6114	·6620	·7118	·7610	·8095	·8574	·9047	0·06
	·09	·1494	·2077	·2650	·3213	·3767	·4313	·4850	·5379	·5900	·6414	·6920	·7418	·7910	·8395	·8874	0·09
2·1885	·0594	·12	·1794	·2377	·2950	·3513	·4067	·4613	·5150	·5679	·6200	·6714	·7220	·7718	·8210	·8695	0·12
	·0275	·0894	·15	·2094	·2677	·3250	·3813	·4367	·4913	·5450	·5979	·6500	·7014	·7520	·8018	·8510	0·15
2		·0575	·1194	·18	·2394	·2977	·3550	·4113	·4667	·5213	·5750	·6279	·6800	·7314	·7820	·8318	0·18
		·0244	·0875	·1494	·21	·2694	·3277	·3850	·4413	·4967	·5513	·6050	·6579	·7100	·7614	·8120	0·21
·1177			·0544	·1175	·1794	·24	·2994	·3577	·4150	·4713	·5267	·5813	·6350	·6879	·7400	·7914	0·24
·0894			·0200	·0844	·1475	·2094	·27	·3294	·3877	·4450	·5013	·5567	·6113	·6650	·7179	·7700	0·27
·06				·0500	·1144	·1775	·2394	·30	·3594	·4177	·4750	·5313	·5867	·6413	·6950	·7479	0·30
·0294				·0140	·0800	·1444	·2075	·2694	·33	·3894	·4477	·5050	·5613	·6167	·6713	·7250	0·33
					·0440	·1100	·1744	·2375	·2994	·36	·4194	·4777	·5350	·5913	·6467	·7013	0·36
					·0064	·0740	·1400	·2044	·2675	·3294	·39	·4494	·5077	·5650	·6213	·6767	0·39
						·0364	·1040	·1700	·2344	·2975	·3594	·42	·4794	·5377	·5950	·6513	0·42
							·0664	·1340	·2000	·2644	·3275	·3894	·45	·5094	·5677	·6250	0·45
							·0271	·0964	·1640	·2300	·2944	·3575	·4194	·48	·5394	·5977	0·48
								·0571	·1264	·1940	·2600	·3244	·3875	·4494	·51	·5694	0·51
								·0160	·0871	·1564	·2240	·2900	·3544	·4175	·4794	·54	0·54
									·0460	·1171	·1864	·2540	·3200	·3844	·4475	·5094	0·57
									·0029	·0760	·1471	·2164	·2840	·3500	·4144	·4775	0·60
										·0329	·1060	·1771	·2464	·3140	·3800	·4444	0·63
											·0629	·1360	·2071	·2764	·3440	·4100	0·66
											·0174	·0929	·1660	·2371	·3064	·3740	0·69
												·0474	·1229	·1960	·2671	·3364	0·72
													·0774	·1529	·2260	·2971	0·75
													·0292	·1074	·1829	·2560	0·78
														·0592	·1374	·2129	0·81
														·0081	·0892	·1674	0·84
															·0381	·1192	0·87
																·0681	0·90
																·0138	0·93

3·7907	3·8850	3·9792	4·0735	4·1677	4.2620	4·3562	4·4504	4·5447	4·6389	4·7332	4·8274	4·9217	5·0159	5·1102	Assumed diameter of steps, &c.
19	20	21	22	23	24	25	26	27	28	29	30	31	32	33	
·9828	1·0277	1·0721	1·1159	1·1593	1·2021	1·2444	1·2861	1·3274	1·3682	1·4085	1·4484	1·4877	1·5266	1·5650	0·00
·9673	1·0128	1·0577	1·1021	1·1459	1·1893	1·2321	1·2744	1·3161	1·3574	1·3982	1·4385	1·4784	1·5177	1·5566	0·03
·9513	·9973	1·0428	1·0877	1·1321	1·1759	1·2193	1·2621	1·3044	1·3461	1·3874	1·4282	1·4685	1·5084	1·5477	0·06
·9347	·9813	1·0273	1·0728	1·1177	1·1621	1·2059	1·2493	1·2921	1·3344	1·3761	1·4174	1·4582	1·4985	1·5384	0·09
·9174	·9647	1·0113	1·0573	1·1028	1·1477	1·1921	1·2359	1·2793	1·3221	1·3644	1·4061	1·4474	1·4882	1·5285	0·12
·8995	·9474	·9947	1·0413	1·0873	1·1328	1·1777	1·2221	1·2659	1·3093	1·3521	1·3944	1·4361	1·4774	1·5182	0·15
·8810	·9295	·9774	1·0247	1·0713	1·1173	1·1628	1·2077	1·2521	1·2959	1·3393	1·3821	1·4244	1·4661	1·5074	0·18
·8618	·9110	·9595	1·0074	1·0547	1·1013	1·1473	1·1928	1·2377	1·2821	1·3259	1·3693	1·4121	1·4544	1·4961	0·21
·8420	·8918	·9410	·9895	1·0374	1 0847	1·1313	1·1773	1·2228	1·2677	1·3121	1·3559	1·3993	1·4421	1·4844	0·24
·8214	·8720	·9218	·9710	1·0195	1·0674	1·1147	1·1613	1·2073	1·2528	1·2977	1·3421	1·3859	1·4293	1·4721	0·27
·8000	·8514	·9020	·9518	1·0010	1·0495	1·0974	1·1447	1·1913	1·2373	1·2828	1·3277	1·3721	1·4159	1·4593	0·30
·7779	·8300	·8814	·9320	·9818	1·0310	1·0795	1·1274	1·1747	1·2213	1·2673	1·3128	1·3577	1·4021	1·4459	0·33
·7550	·8079	·8600	·9114	·9620	1·0118	1·0610	1·1095	1·1574	1·2047	1·2513	1·2973	1·3428	1·3877	1·4321	0·36
·7313	·7850	·8379	·8900	·9414	·9920	1·0418	1·0910	1·1395	1·1874	1·2347	1·2813	1·3273	1·3728	1·4177	0·39
·7067	·7613	·8150	·8679	·9200	·9714	1·0220	1·0718	1·1210	1·1695	1·2174	1·2647	1·3113	1·3573	1·4028	0·42
·6813	·7367	·7913	·8450	·8979	·9500	1·0014	1·0520	1·1018	1·1510	1·1995	1·2474	1·2947	1·3413	1·3873	0·45
·6550	·7113	·7667	·8213	·8750	·9279	·9800	1·0314	1·0820	1·1318	1·1810	1·2295	1·2774	1·3247	1·3713	0·48
·6277	·6850	·7413	·7967	·8513	·9050	·9579	1·0100	1·0614	1·1120	1·1618	1·2110	1·2595	1·3074	1·3547	0·51
·5994	·6577	·7150	·7713	·8267	·8813	·9350	·9879	1·0400	1·0914	1·1420	1·1918	1·2410	1·2895	1·3374	0·54
·57	·6294	·6877	·7450	·8013	·8567	·9113	·9650	1·0179	1·0700	1·1214	1·1720	1·2218	1·2710	1·3195	0·57
·5394	·60	·6594	7177	·7750	·8313	·8867	·9413	·9950	1·0479	1·1000	1·1514	1·2020	1·2518	1·3010	0·60
·5075	·5694	·63	·6894	·7477	·8050	·8613	·9167	·9713	1·0250	1·0779	1·1300	1·1814	1·2320	1·2818	0·63
·4744	·5375	·5994	·66	·7194	·7777	·8350	·8913	·9467	1·0013	1·0550	1·1079	1·1600	1·2114	1·2620	0·66
·4400	·5044	·5675	·6294	·69	·7494	·8077	·8650	·9213	·9767	1·0313	1·0850	1·1379	1·1900	1·2414	0·69
·4040	·4700	·5344	·5975	·6594	·72	·7794	·8377	·8950	·9513	1·0067	1·0613	1·1150	1·1679	1·22c0	0·72
·3664	·4340	·5000	·5644	·6275	·6894	·75	·8094	·8677	·9250	·9813	1·0367	1·0913	1·1450	1·1979	0·75
·3271	·3964	·4640	·5300	·5944	·6575	·7194	·78	·8394	·8977	·9550	1·0113	1·0667	1·1213	1·1750	0·78
·2860	·3571	·4264	·4940	·5600	·6244	·6875	·7494	·81	·8694	·9277	·9850	1·0413	1·0967	1·1513	0·81
·2429	·3160	·3871	·4564	·5240	·5900	·6544	·7175	·7794	·84	·8994	·9577	1·0150	1·0713	1·1267	0·84
·1974	·2729	·3460	·4171	·4864	·5540	·6200	·6844	·7475	·8094	·87	·9294	·9877	1·0450	1·1013	0·87
·1492	·2274	·3029	·3760	·4471	·5164	·5840	·6500	·7144	·7775	·8394	·90	·9594	1·0177	1·0750	0·90
·0981	·1792	·2574	·3329	·4060	·4771	·5464	·6140	·6800	·7444	·8075	·8694	·93	·9894	1·0477	0·93
·0438	·1281	·2092	·2874	·3629	·4360	·5071	·5764	·6440	·7100	·7744	·8375	·8994	·96	1·0194	0·96
	·0738	·1581	·2392	·3174	·3929	·4660	·5371	·6064	·6740	·7400	·8044	·8675	·9294	·99	0·99
	·0157	·1038	·1881	·2692	·3474	·4229	·4960	·5671	·6364	·7040	·7700	·8344	·8975	·9594	1·02
		·0457	·1338	·2181	·2992	·3774	·4529	·5260	·5971	·6664	·7340	·8000	·8644	·9275	1·05
			·0757	·1638	·2481	·3292	·4074	·4829	·5560	·6271	·6964	·7640	·8300	·8944	1·08
			·0131	·1057	·1938	·2781	·3592	·4374	·5129	·5860	·6571	·7264	·7940	·8600	1·11
				·0431	·1357	·2238	·3081	·3892	·4674	·5429	·6160	·6871	·7564	·8240	1·14
					·0731	·1657	·2538	·3381	·4192	·4974	·5729	·6460	·7171	·7864	1·17
					·0050	·1031	·1957	·2838	·3681	·4492	·5274	·6029	·6760	·7471	1·20
						·0350	·1331	·2257	·3138	·3981	·4792	·5574	·6329	·7060	1·23
							·0650	·1631	·2557	·3438	·4281	·5092	·5874	·6629	1·26
								·0950	·1931	·2857	·3738	·4581	·5392	·6174	1·29
								·0200	·1250	·2231	·3157	·4038	·4881	·5692	1·32
									·0500	·1550	·2531	·3457	·4338	·5181	1·35
										·0800	·1850	·2831	·3757	·4638	1·38
											·1100	·2150	·3131	·4057	1·41
											·0255	·1400	·2450	·3431	1·44
												·0555	·1700	·2750	1·47
													·0855	·2000	1·50

To get the actual diameters of these steps when thickness of belt $=\frac{7}{32}=0{\cdot}22$ in., we have simply to subtract 0·22 in. from the effective diameters just given, thus:

42·49	34·66	24·98	12·76	2·62 in.
3·38	14·18	24·98	35·78	42·98

would be the series of pairs of actual diameters.

In solving problems relating to the diameters of cone pulleys by means of the accompanying table, we must have, besides the distance between centres, sufficient data to determine the column representing the length of belt. The length of belt is seldom known because it is of small practical importance to know its exact length; but it may be estimated approximately, and then the determination of suitable diameters of the steps becomes an extremely simple matter, as may be seen from what has already preceded. When the length of the belt is not known, and has not been assumed, we indirectly prescribe the length of belt by assuming the effective diameters of the two steps of a belted pair; thus, in the following **Figure (561), the length of belt is prescribed** when the distance A B, and any one of the pairs of steps D_1d_1, D_2d_2, D_3d_3 and D_4d_4 are given. We will show in the following

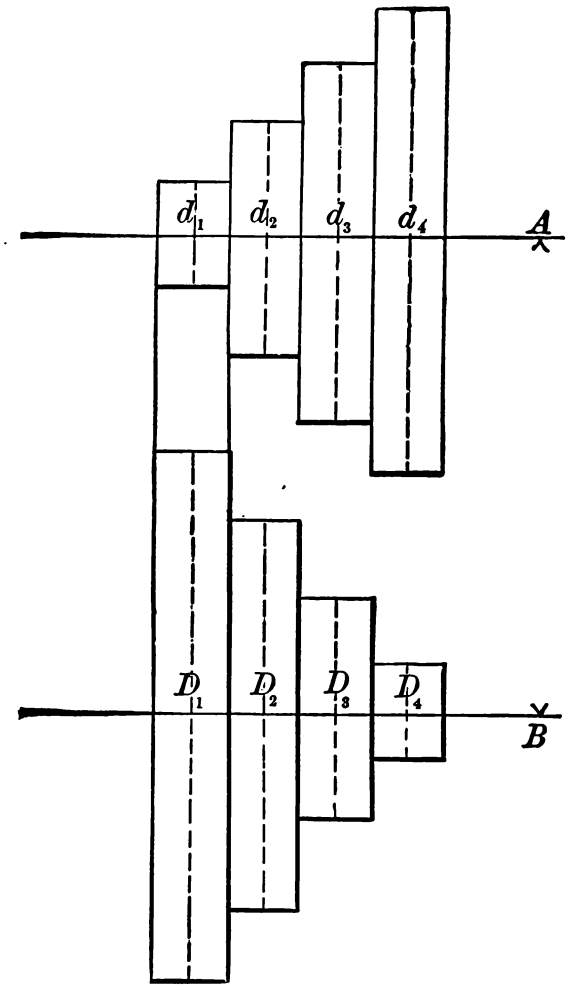

Fig. 561.

examples how the length of belt and its corresponding column of diameter may be found when a pair of steps (like D_1d_1), are given.

EXAMPLE 1. Given the effective diameters

4·5	9 in.	15 in.	21 in.	on cone A,
—	—	15 in.	—	,, B,

and the distance between centres equal to 50 inches.

Required the remaining diameters on cone B.

Since in this example the steps of the given pair are equal, we look for $\frac{15}{50}=0{\cdot}30$, in the extreme right-hand column of table; we will find it in the 11th line from the top; now looking along this line for the diameter of the other step, $=\frac{15}{50}=0{\cdot}30$, we will find it in column 10; consequently the numbers of this column may be taken as the diameters of the steps which are the companions or partners of those in the extreme right-hand column.

We can now easily determine the remaining members of the pairs to which 4 5 in., 9 in., and 21 in. steps respectively belong. To find the partner of the 4·5 step, we find $\frac{45}{50}=0{\cdot}09$ in the right-hand column, and look along the horizontal line on which 0·09 is placed till we come to column 10, in which we will find the number 0·4850; 0·4850 × 50 in. = 24·25 in. will be the effective diameter of the companion to the 4·5 in. step.

To find the partner to the 9 in. step, we proceed as before, looking for $\frac{9}{50}=0{\cdot}18$ in the right-hand column, and then along the horizontal line of 0·18 to column 10, then will 0·4113 × 50 in. = 20·57 in. be the required companion to the 9 in. step of cone A.

In like manner for the partner of the 21 in. step we get 0·1700 × 50 in. = 8·5 in. The effective diameter therefore will be,

4·5 in.	9 in.	15 in.	21 in.	on cone A,
24·25	20·57	15 in.	8·5	,, B.

If the thickness of belt employed were 0·25 in. the *actual* diameters of steps would be,

4·25	8·75	14·75	20·75	on cone A,
24·00	20·32	14·75	8·25	,, B,

and the length of belt would be 2·9425 × 50 = 147·125 in.

EXAMPLE 2. Given the effective diameters

6 in.	12 in.	18 in.	24 in.	on cone A,
30 in.	—	—	—	,, B,

and the distance between centres = 40 in.

Required the unknown diameters on cone B.

We must, as before, first find the vertical column corresponding to the length of belt which joins the pair of steps $\frac{6\text{ in}}{30\text{ in}}$. We find the number $\frac{6}{40}=\cdot15$ in the right-hand column, and then look along its horizontal line for its partner $\frac{30}{40}=0{\cdot}75$. Since we do not find any number exactly equal to ·7500, we must interpolate. For the benefit of those not familiar with the method of interpolation we will give in detail the method of finding intermediate columns of the table. On the aforesaid horizontal line we find in column 16 a number 0·7520, larger than the required 0·7500, and in column 15 a number 0·7014, smaller than 0·7500; evidently the intermediate column, containing the required 0·7500, must lie between columns 16 and 15. To find how far the required column is from column 16, we subtract as follows:

0·7520	0·7520
0·7500	0·7014
·0020	0·0506

then the fraction $\frac{\cdot0020}{\cdot00506}=0{\cdot}04$ nearly will represent the position of the required intermediate column; namely, that its distance from column 16 is about $\frac{4}{100}$ of the distance between the adjacent columns, 15 and 16.

To find other numbers in this intermediate column we have only to multiply the difference between the adjacent numbers of columns 16 and 15 by 0·04, and subtract the product from the number in column 16. But it is not necessary to find as many numbers of the intermediate columns as are contained in either of the adjacent columns; it is only necessary to find as many numbers as there are steps in each of the cone pulleys. We will now illustrate what has preceded, by finding the partner to the 12 in. step of cone A. Find, as before, the horizontal line corresponding to $\frac{12}{40}=0{\cdot}30$, then take the difference between the numbers 0·6413 and 0·5867 of columns 16 and 15, and multiply this difference, 0·0546, by 0·04; this product = 0·0022 subtracted from 0·6413, will give 0·6391, a number of the intermediate columns corresponding to the length of belt of the present problem. Multiplying by the distance between the axes = 40 in. we get 0·6391 × 40 = 25·56, for the diameter of the step of cone B which is partner to the 12 in. step of cone A.

To find the companion to the 18 in. step, we proceed in the same manner, looking for the horizontal line $\frac{18}{40}=0{\cdot}45$, and interpolating as follows:

$$0{\cdot}5094-(0{\cdot}5094-0{\cdot}4500)\times0{\cdot}04=0{\cdot}5070.$$

Consequently, 0·5070 × 40 in. = 20·28 in. will be the required partner of the 18 in. step.

In like manner, for the 24 in. step, we have

0·3500 — (0·3500 — 0 2840) × 0·04 = 0·3474, and 0·3474 × 40 = 13·90

The effective diameters are therefore

6 in.	12 in.	18 in.	24 in.	on cone A.
30	25·56	20·28	13·9	,, B.

The actual diameters, when thickness of belt = 0·20 in., are :

5·8	11·8	17·8	23·8	on cone A.
29·8	25·36	20·08	13·7	,, B.

And the length of belt will be :

$$[3{\cdot}5080 - (3{\cdot}5080 - 3\ 4137) \times 0{\cdot}04] \times 40 \text{ in.} = 140{\cdot}17 \text{ in.}$$

EXAMPLE 3. Given the effective diameters :

12 in.	18 in.	24 in.	30 in.	on cone A,
33 in.	—	—	—	,, B,

and the distance between the centres = 60 in.

Required the remaining diameters on cone B.

The horizontal corresponding to $\frac{12}{60} = 0{\cdot}20$ lies $\frac{2}{3}$rd way between the horizontal line, corresponding to 0·18 and 0·21 ; the number $\frac{33}{60} = 0{\cdot}5500$, corresponding to the companion of the 12 in. step, will therefore lie $\frac{2}{3}$rd way between the horizontal lines 0·18 and 0·21. We have now to find two numbers on this $\frac{2}{3}$rd line, of which one will be less and the other greater than 0·5500. An inspection of the table will show that these greater and less numbers must lie in columns 13 and 12. The numbers on the $\frac{2}{3}$rd line itself may now be found as follows :

In column 13, $0{\cdot}5750 - \frac{2}{3}(0{\cdot}5750 - 0{\cdot}5513) = 0{\cdot}5592$.

In column 12, $0{\cdot}5213 - \frac{2}{3}(0{\cdot}5213 - 0{\cdot}4967) = 0{\cdot}5049$.

0·5592 will be the number on the $\frac{2}{3}$rd line, which is greater than 0·5500, and 0·5049 will be the one which is less than 0·5500. The position of the intermediate column, corresponding to the length of belt of the present example, may now be found, as before, briefly. It is :

$$\begin{matrix} 0{\cdot}5592 - 0{\cdot}5500 = 0{\cdot}0092 \\ 0{\cdot}5592 - 0{\cdot}5049 = 0{\cdot}0543 \end{matrix} = 0{\cdot}17.$$

Consequently the required column lies nearest column 13, $\frac{17}{100}$th way between columns 13 and 12. To find any other number in the required column, we have only to multiply the difference between two adjacent numbers of columns 13 and 12 by $\frac{17}{100}$, and subtract the product from the number in column 13. For example, to find the diameter of the partner to the 18 in. step of cone A, we find the numbers 0·4750 and 0·4177 of columns 13 and 12, which lie on the horizontal line corresponding to $\frac{18}{60} = 0{\cdot}30$; the difference, 0·0573, between the two numbers is multiplied by 0·17, and the product, $0{\cdot}0573 \times 0{\cdot}17 = 0{\cdot}0097$, subtracted from 0·4750. This last difference will equal 0·4653, and will be the number sought. If we now multiply by 60, we will get 27·92 in. as the effective diameter of that step on cone B which is the partner to the 18 in. step of cone A.

To find the companion of the 24 in. step, we proceed after the same fashion ; the horizontal line $\frac{24}{60} = 0{\cdot}40$ lies $\frac{1}{3}$rd way between 0·39 and 0·42 ; hence,

In column 13, $0{\cdot}3900 - \frac{1}{3}(0{\cdot}3900 - 0{\cdot}3594) = 0{\cdot}3798$;

In column 12, $0{\cdot}3294 - \frac{1}{3}(0{\cdot}3294 - 0{\cdot}2975) = 0{\cdot}3188$;

And $0{\cdot}3798 - (0{\cdot}3798 - 0{\cdot}3188) \times 0{\cdot}17 = 0{\cdot}3694$.

The required effective diameter of the step, which is partner to the 24 in. step, will therefore be $0{\cdot}3694 \times 60 = 22{\cdot}16$ in.

In like manner we obtain partner for the 30 in. step, thus :

In column 13, $0{\cdot}2944 - \frac{2}{3}(0{\cdot}2944 - 0{\cdot}2600) = 0{\cdot}2715$.

In column 12, $0{\cdot}2300 - \frac{2}{3}(0{\cdot}2300 - 0{\cdot}1940) = 0{\cdot}2060$.

Also $0{\cdot}2715 - (0{\cdot}2715 - 0{\cdot}2060) \times 0{\cdot}17 = 0{\cdot}2604$, and $0{\cdot}2604 \times 60$ in. = 15·62 in. = diam. of step belonging to the same belted pair as the 30 in. step of cone A.

The effective diameters will be :

12 in.	18 in.	24 in.	30 in.	on cone A,
33	27·92	22·16	15·62	,, B,

and the actual diameters when belt is 0·22″ thick :

11·78	17·78	23·78	29.78 in.
32·78	27·70	21·94	15·40

and the length of belt is found to be :

$$[3{\cdot}2252 - (3{\cdot}2252 - 3{\cdot}1310) \times 0{\cdot}17] \times 60 \text{ in.} = 192{\cdot}55 \text{ in.}$$

In all the preceding problems it should be noticed that we arbitrarily assumed *all* the steps on one cone, and *one* of the steps on the other cone. It will be found that all of the practical problems relating to cone-pulley diameters can finally be reduced to this form, and can consequently be solved according to the methods just given.

For those who find difficulty in interpolating, the following procedure will be found convenient : Estimate approximately the necessary length of belt, then divide this length by the distance between the centres of the cone pulleys ; now find which one of the 33 lengths of belt (per unit's distance apart of the centres) given in the table is most nearly equal to the quotient just obtained, and then take the vertical column, at the head of which it stands, for the companion to the right-hand column. Those numbers of these companion columns which are on the same horizontal line will be the companion steps of a belted pair. The table is so large, that in the great majority of cases not only exact, but otherwise satisfactory values can be obtained by this method, without any interpolation whatever."

The teeth of the back gear should be accurately cut so that there is no lost motion between the teeth of one wheel, and the spaces of the other, because on account of the work being of large diameter or of hard metal (so as to require the slow speed), the strain of the cut is nearly always heavy when the back gear is in use, and the strain on the teeth is correspondingly great, causing a certain amount of spring or deflection in the live spindle and back gear spindle. Suppose then, that at certain parts of the work there is no cut, then when the tool again meets the cut the work will meet the tool and stand still until the lost motion in the gear teeth and the spring of the spindles is taken up, when the cut will proceed with a jump that will leave a mark on the work and very often break the tool. When the cut again leaves the tool a second jump also leaving a mark on the work will be

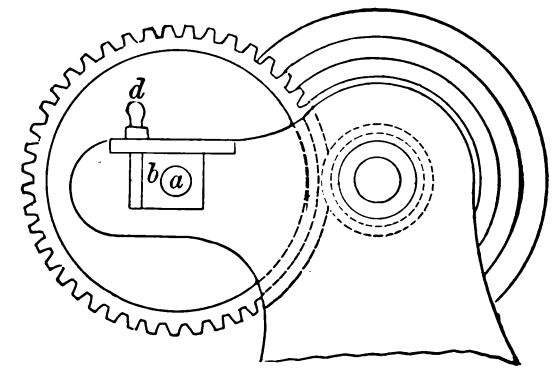

Fig. 562.

made. If the teeth of the gears are cut at an angle to the axial line of the spindle, as is sometimes the case, this jumping from the play between the teeth will be magnified on account of a given amount of play, affording more back lash in such gears.

The teeth of the wheels should always be of involute and not of epicycloidal form, for the following reasons. The transmission of motion by epicycloidal teeth is exactly uniform only when their pitch circles exactly coincide, and this may not be the case in time because of wear in the parts as in the live spindle journals and the bearings, and the back gear spindle and its bearings, and *every variation of speed* in the cut, however slight it may be, produces a corresponding mark upon the work. In involute teeth the motion transmitted will be smooth and equal whether the pitch lines of the wheels coincide or not, hence the wear of the journals and bearings does not impair their action.

The object of cutting the teeth at an angle is to have the point of contact move or roll as it were from one end to the other of the teeth, and thus preserve a more conterminous contact on the line of centres of the two wheels, the supposition being that this would remove the marks on the work produced by the tremor of the back gear. But such tremor is due to errors in the form of the teeth, and also in the case of epicycloidal teeth from the pitch lines of the teeth not exactly coinciding when in gear.

The pitch of the teeth should be as fine as the requisite strength, with the usual allowance of margin for wear and safety will allow, so as to have as many teeth in continuous contact as possible.

Various methods of moving the back gear into and out of gear with the cone spindle gears are employed. The object is to place the back gears into gear to the exact proper depth to hold them securely in position, and to enable the operator to operate the gears without passing to the back of the lathe. Sometimes a sliding bearing box, such as shown in Fig. 562, is employed; *a* is the back gear spindle, *b* its bearing box, and *d* a pin which when on

the side shown holds *b* in position, when the back gear is in action. To throw it out of action *d* is removed, *b* pushed back, and *d* inserted in a hole on the right hand of *b*; the objection is that there is no means of taking up the wear of *b*, and it is necessary to pass to the back of the lathe to operate the device.

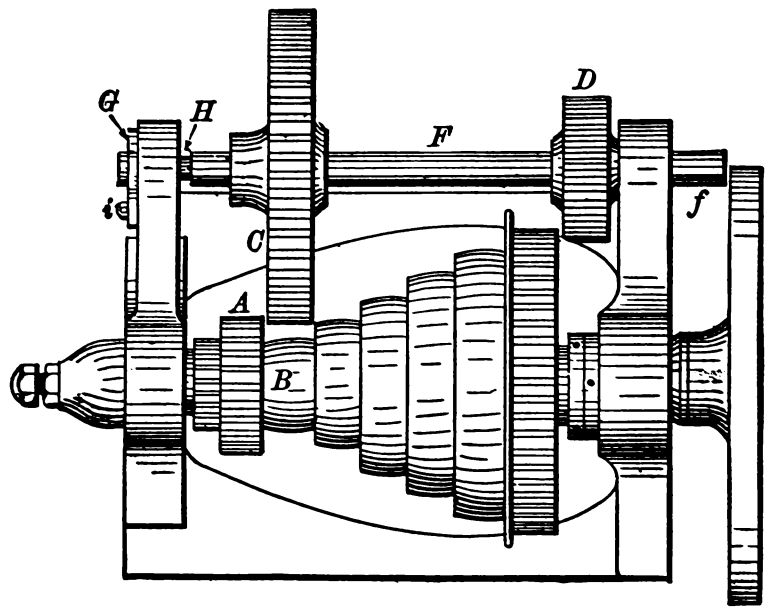

Fig. 563.

Another plan is to let the back gear move endwise and bush its bearing holes with hardened steel bushes. This possesses the advantage that the gear is sure, if made right, to keep so, but it has some decided disadvantages: first, the pinion A, Fig. 563, must be enough larger than the smallest cone-step B to give room

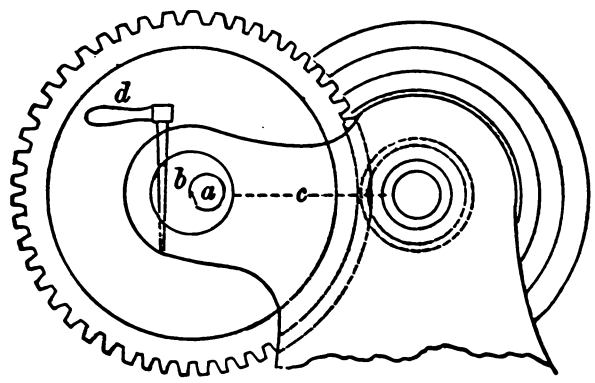

Fig. 564.

between B and C for the belt, and this necessitates that D also be larger than otherwise; secondly, the gear-spindle F projects through the bearing at *f*, and this often comes in the way of the bolt-heads used for chucking work to the face plate. The method of securing the spindle from end motion is as follows: On the back

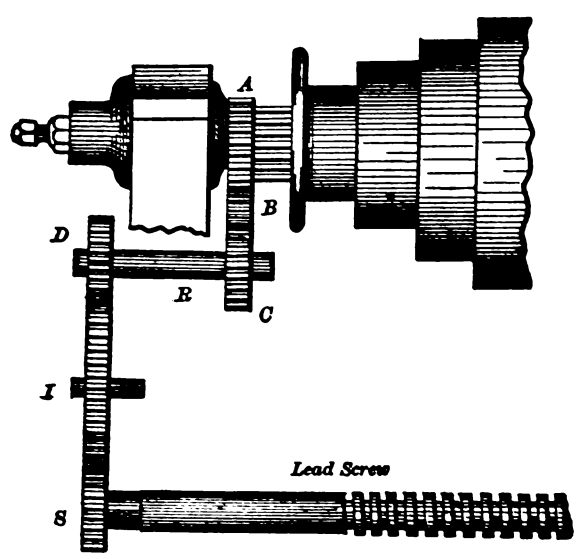

Fig. 565.

of the head is pivoted at *i*, a catch G, and on the gear shaft F are two grooves. As shown in the sketch, G is in one of these grooves while H is the other, but when the back gear is in, G would be in H.

Sometimes a simple eccentric bush and pin is used as in Fig. 564, in which *a* is the spindle journal, *b* a bush having bearing in the lathe head, and *d* a taper pin to secure *b* in its adjusted position.

In large heavy lathes having many changes of speed, there are various other constructions, as will be seen upon the lathes themselves in the various illustrations concerning the methods of throwing the back gear in and out. The eccentric motion shown in Fig. 573 of the Putnam lathe, is far preferable to any means in which the back-gear spindle moves endways, because, as before stated, the end of the back-gear spindle often comes in the way of the bolts used to fasten work to the large face plate. This occurs mainly in chucked work of the largest diameter within the capacity of the lathe.

In many American lathes the construction of the gearing that

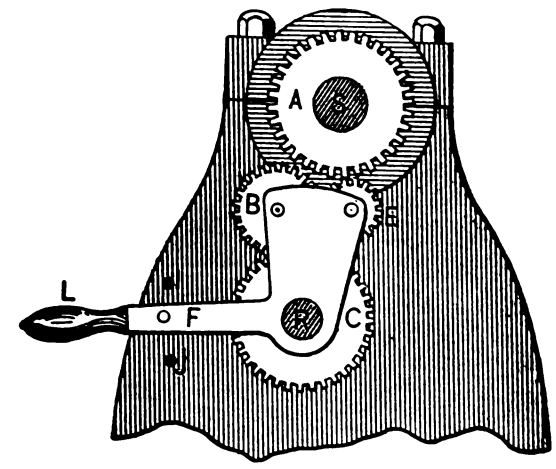

Fig. 566.

conveys motion from the live spindle is such that facility is afforded to throw the change gears out of action when the lathe is running fast, as for polishing purposes, so as to save the teeth from wear. Means are also provided to reverse the direction of lead screw or feed screw revolution. An example of a common construction of this kind is shown in Fig. 565, in which the driving wheel A is on the inner side of the back bearing as shown. It drives (when in gear) a pair of gears, one only of which is seen in the figure at B, which drives C, and through R, D, I, and S, the lead screw. A side view of the wheel A and the mechanism in connection therewith is shown in Fig. 566, in which S represents the live spindle and R is a spindle or shaft corresponding to R in Fig. 565. L is a lever pivoted upon R and carrying two pinions B and E; pinion B is of larger diameter than E, so that B gears with both C

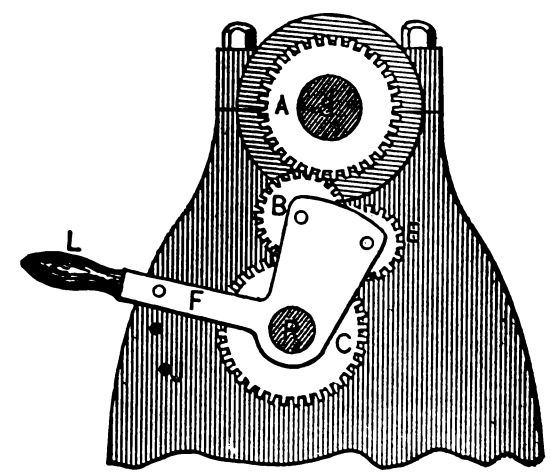

Fig. 567.

and E (C corresponding to wheel C in Fig. 565), while E gears with B only.

With the lever L in the position shown, neither B nor E engages with A, hence they are at rest; but if lever L be raised as in Fig. 567, B will gear with wheels A and C, and motion will be conveyed from A to C, wheel E running as an idle wheel, thus C will revolve in the same direction as the lathe spindle.

But if lever L be lowered as in Fig. 568, then wheel E will gear with and receive motion from A, which it will convey to B, and C will revolve in the opposite direction to that in which the lathe spindle runs. To secure lever L in position, a pin F passes through it and into holes as I, J, provided in the lathe head. Lever L is sometimes placed inside the head, and sometimes outside as in

Fig. 569, and it will be obvious that it may be used to cut left-hand threads without the use of an extra intermediate change gear, which is necessary in the construction shown in Fig. 570, in order to reverse the direction of lead screw revolution.

Sometimes the pin F is operated by a small spring lever attached to L, so that the hand grasps the end of L and the spring lever simultaneously, removing F from the hole in H, and therefore freeing L, so as to permit its operation. By relaxing the pressure on the small spring lever pin F finds its own way into the necessary hole in H, when opposite to it, without requiring any hand manipulation.

In larger lathes the lever L is generally attached to its stud outside the end bearing of the head H.

It is preferable, however, that the device for changing the direction of feed traverse be operative from the lathe carriage as

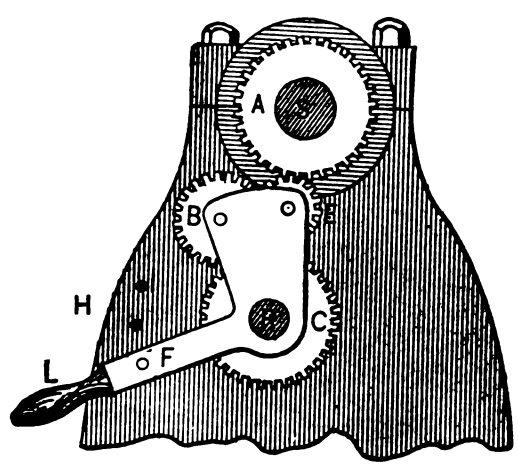

Fig. 568.

in the Sellers lathe, so that the operator need not leave it when it is necessary to reverse the direction of traverse.

The swing frame, when the driving gear D is outside of the back bearing (as it is in Fig. 570), is swung from the axis of the lead screw as a centre of motion, and has two slots for receiving studs for change wheels. But when the driving gear is inside the back bearing as in Fig. 571, the swing frame may be suspended from the spindle (R, Fig. 565) that passes through the lathe head, which may also carry the cone for the independent feed as shown in Fig. 571, no matter on which side of the lathe the lead screw and feed rod are. This affords the convenience that when both lead screw and feed rod are in front of the lathe, the feed may be changed from the screw cutting to the rod feed, or *vice versâ*, by

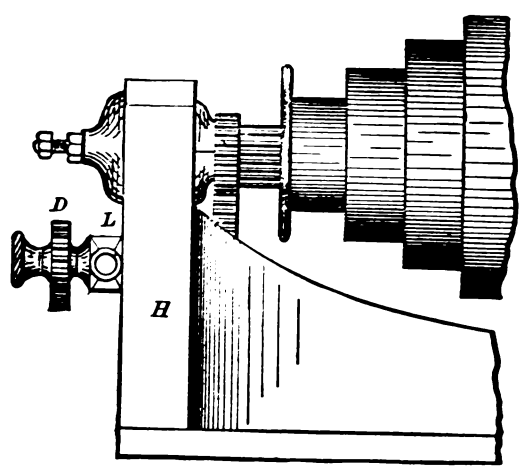

Fig. 569.

suitable mechanism in the apron, without requiring any change to be made in the driving gears.

In the lathe shown in Fig. 572, which is from the design of S. W. Putnam, of the Putnam Tool Company of Fitchburg, Massachusetts, the cone pinion for the back gear, and that for driving the feed motion, are of the same diameter and pitch, so that the gear-wheel L in Fig. 573 may (by means of a lever shown dotted in) be caused to engage with either of them. When the latter is used in single gear it would obviously make no difference which wheel drives L, but when the back gear is put in and L is engaged with the cone pinion, its speed corresponds to that of the cone, which being nine times faster than the live spindle, enables the cutting of threads nine times as coarse as if the back gear was not in use. This affords very great advantages for cutting worms and threads of coarse pitches.

An excellent method of changing the direction of feed motion, and of starting or stopping the same, is shown in Fig. 574, which represents the design of the Ames Manufacturing Company's lathe.

In the figure A, is the small step of the lathe cone, B the pinion to drive the back gear, C a pinion to drive the feed gear,

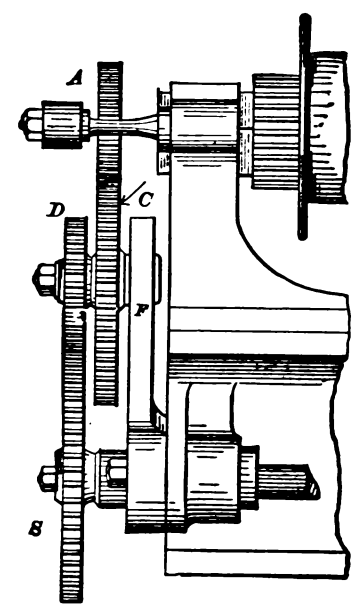

Fig. 570.

giving motion to D, which drives E, the latter being fast to G and rotating freely upon the shaft F, G drives H, which in turn drives I. The clutch J has a featherway into which fits the feather *c*, on the shaft F, so that when the clutch rotates it rotates J through the medium of *c*; K is a circular fork in a groove in J, and operated by a lever operated by a rod running along the front of the lathe bed. This rod is splined so that a lever carried by the apron or feed-table, having a hub and enveloping the rod, may by means of a feather filling into the spline operate the rod by partly rotating it,

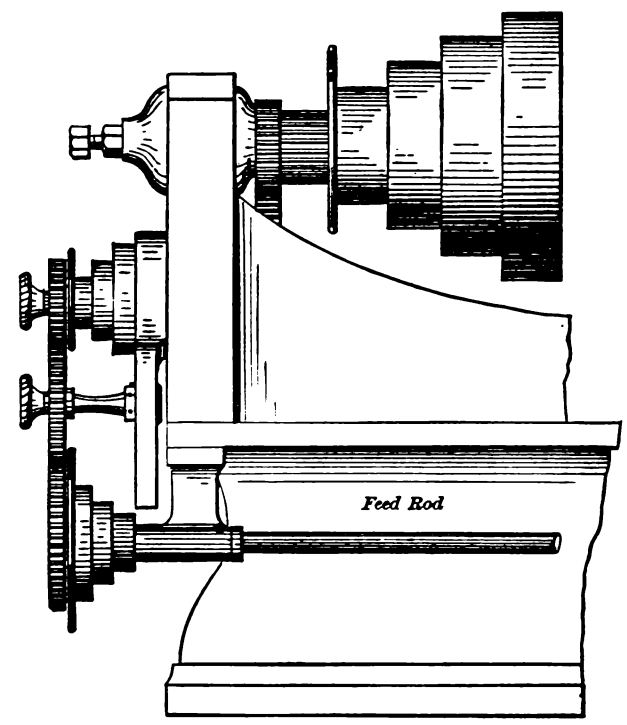

Fig. 571.

and hence operate K. Suppose now that this lever stands horizontal, then the clutch J would stand in the position shown in the cut, and D, E, G, H, and I, would rotate, while F would remain stationary. By lifting the lever, however, J would be moved laterally on F (by means of K) and the lug *a* on J would engage with lug *b* on G, and G would drive J, which through *c* would drive F, on which is placed a change gear at L, thus traversing the carriage forward. To traverse it backward the lever would be lowered or depressed below the horizontal level moving K, and therefore J, to the right, so that lug *a* would engage with lug *b* on I, hence F

would be driven by I, whose motion is in an opposite direction to G, as is denoted by the respective arrows.

To throw all the feed motion out of gear, to run the lathe at its quickest for polishing, etc., the operation is as follows:

M is tubular and fast in N and affords journal bearing to wheel D. Through M passes stud O, having a knob handle at P. At the end of the hub of D is a cap fast in D, the latter being held endways between the shoulder shown on O and the washer and nut T. If then P be pulled outwards O will slide through M, and through the medium of T will cause D to slide over M, in the direction of the arrow, and pass out of gear from C, motion therefore ceasing at C.

Q is the swing frame for the studs to carry the change wheels, and R a bolt for securing Q in its adjusted position. S is a journal and bearing for H.

If it be considered sufficient the feed motion on small lathes (instead of feeding in both directions on the lateral and cross feeds as in the Putnam lathe), may feed in the direction from the dead to the live centre, and in one direction only on the cross slide.

An example of a feed motion of this kind is shown in Figs. 575 and 576; *f f* is the feed spindle splined and through the medium of a feather driving the bevel pinion A having journal bearing in a head which overlaps the rim of H, as shown in figure. On the other side of that rim is a washer *z* on the same stud having a radial face also overlapping the rim of H, but its back face is bevelled to a corresponding bevel on the radial face on the hub of lever O (the hub of O being pivoted on the same stud). When, therefore, O is depressed, the two-bevel face of the hub of O forces the washer Z against the face of the wheel H, whose radial faces at the rim are therefore gripped between the face of the collar N and that of the washer Z, hence H is locked fast. By raising the end of lever O, Z is released and H is free to rotate.

Both the carriage feed and cross feed can only be traversed in one direction so far as these gears and levers are concerned, but means are provided on the lathe headstock for reversing the direction of motion of the feed spindle *f* so as to reverse the direction of the feeds. It will be observed that so long as *f* rotates, A, C, D, and F rotate, the remaining motions only operating when S is screwed up.

In order to obtain a delicate tool motion from the handle Q it is necessary to reduce the motion between J and I as much as possible, a point in which a great many lathes as at present constructed are deficient, because Q, although used to simply traverse

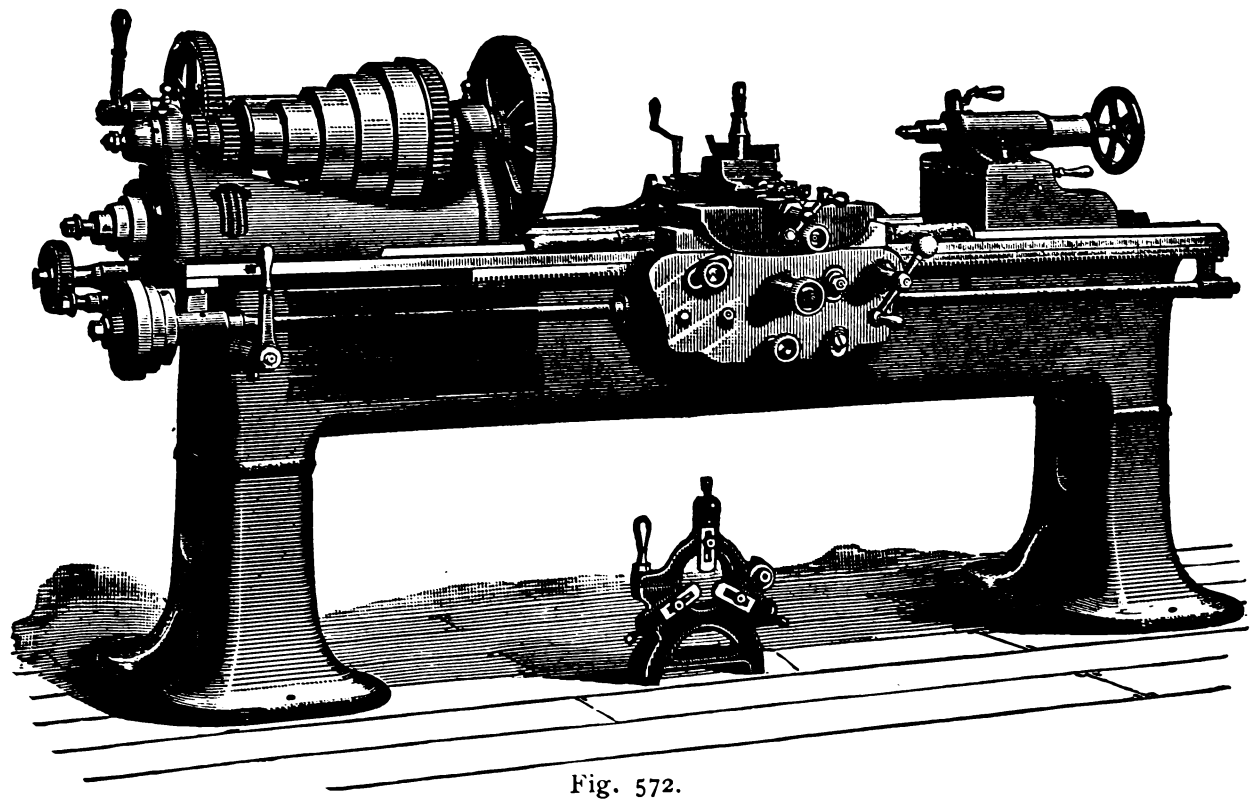

Fig. 572.

B. Pinion A drives the bevel gear C, which is in one piece with pinion D. The latter drives gear F, which drives pinion K, which is carried on a lever L, pivoted on the stud which carries F, so that by operating L, pinion K is brought into gear with pinion P, which is fast upon the cross-feed screw, and therefore rotates it to effect the automatic cross feed.

As shown in the cut, the lever L is in such a position as to throw K out of gear with P, and the cross-feed screw is free to be operated by the handle by hand. At M is a slot in L in which operates a cam or eccentric, one end of which projects into L, while at the other end is the round handle R, Fig. 575, which is rotated to raise or lower that end of L so as to operate K. To operate the saddle or carriage the motion is continued as follows:—at the centre of F is a pinion gear G which operates a gear H, which is in one piece with the pinion I, and the latter is in gear with the rack running along the lathe bed.

If the motion from A to I was continuous, the carriage feed or traverse would be continuous, but means are provided whereby motion from F to I may be discontinued, as follows:—A hand traverse or feed is provided. J, Figs. 575 and 576, is carried by a stud having journal bearing in a hub on X and receiving the handle Q; hence by operating Q, J is rotated, operating the gear H, upon which is the pinion I, which is in gear with the rack running along the lathe bed.

To lock the carriage in a fixed position, as is necessary when operating the cross feed on large radial surfaces, the following device is provided:—N is a stud fixed in a hub on X, and having the carriage along the bed, in which case rapid motion of the latter is desirable, is also used to feed the tool into corners when the lathe has no compound rest to put on light cuts on radial faces, hence it should be capable of giving a delicate tool motion.

On account of the deficiency referred to it is often necessary to put on a fine radial cut by putting the feed traverse in gear, and, throwing the feed-screw gear out of contact with the other change wheels, pull it around by hand to put on the cut. In compound slide rests these remarks do not apply, because the upper part of the rest may be used instead of the handle Q.

Many small lathes are provided with a tool rest known as the *elevating rest*, or weighted lathe.

An excellent example of an elevating rest for a weighted lathe is shown in Figs. 577 and 578, which represent the construction in the Pratt and Whitney lathe. A is the lathe shears upon which slides the carriage provided with V slideways R for the sliding piece B, and provided at the other end with the guides H. The cross slide S is pivoted upon B at D, and fits at the other end between the guides H. At E is the elevating screw which when operated raises or lowers that end of the elevating rest to adjust the tool height. This also affords an excellent means of making a minute adjustment for depth of tool cut. The tool rest F is bolted to S.

The weight W is suspended from S, and, therefore, holds one end of S to B, the lathe to C, and C to A; at the other end the weight holds S to C (through the medium of the elevating screw E) and C to A. The cross-feed nut N is fast to S, the cross-feed

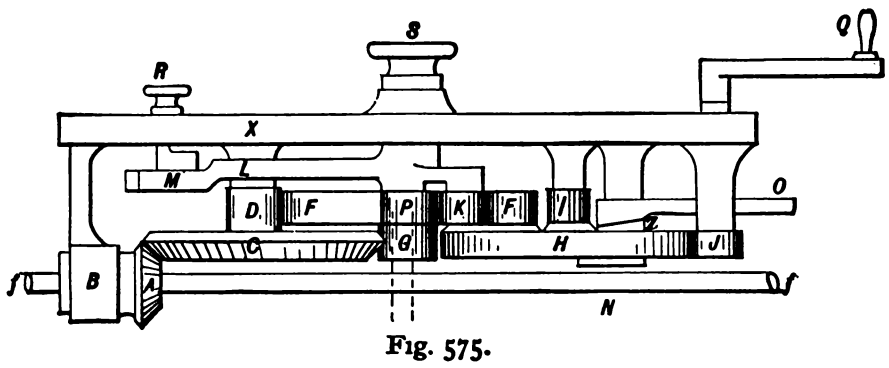

Fig. 575.

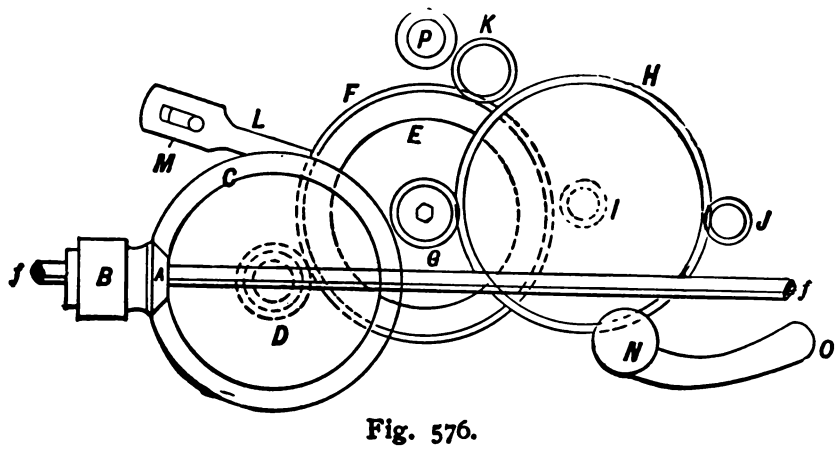

Fig. 576.

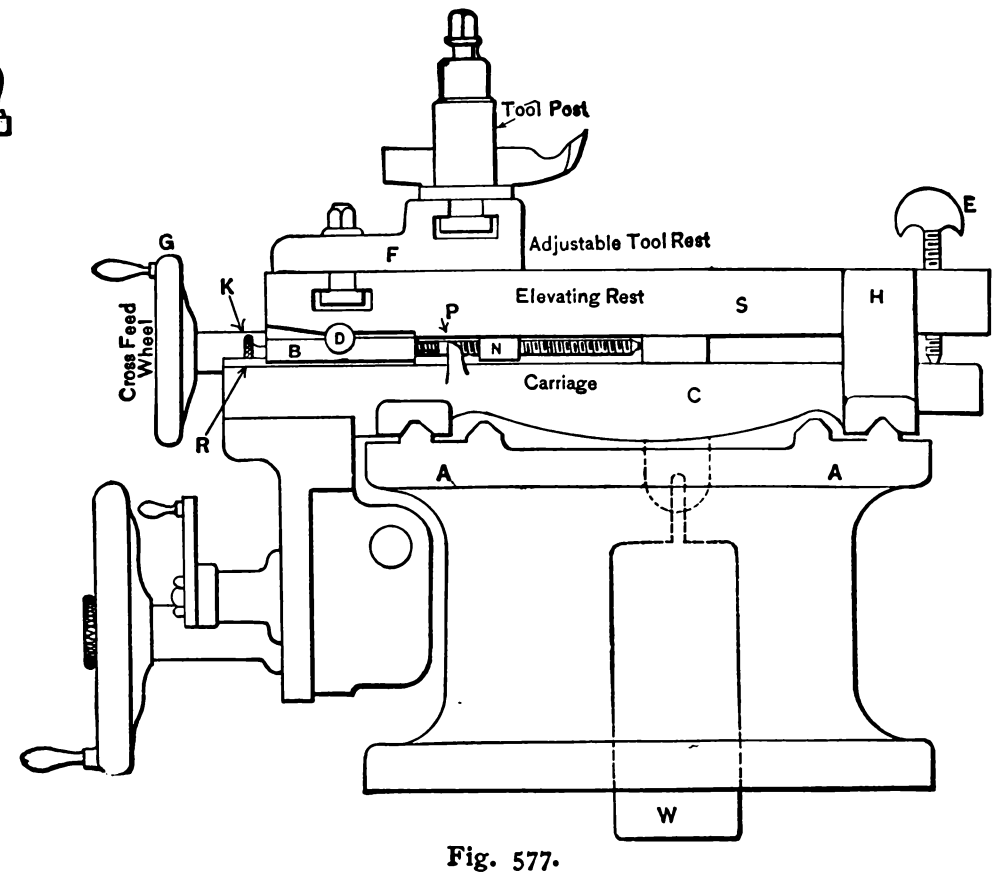

Fig. 577.

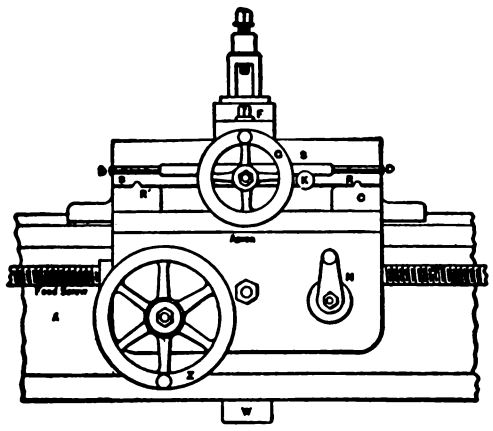

Fig. 578.

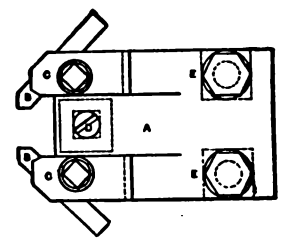

Fig. 579.

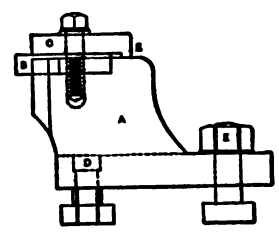

Fig. 580.

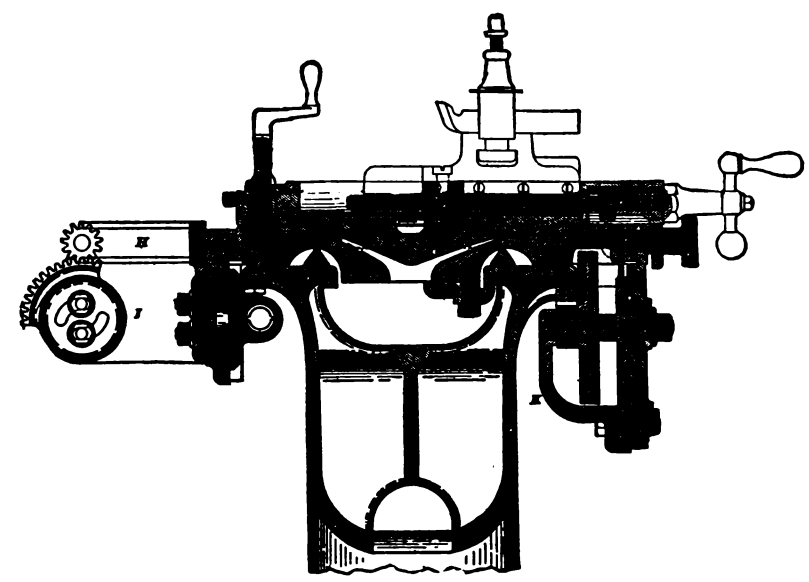

Fig. 581.

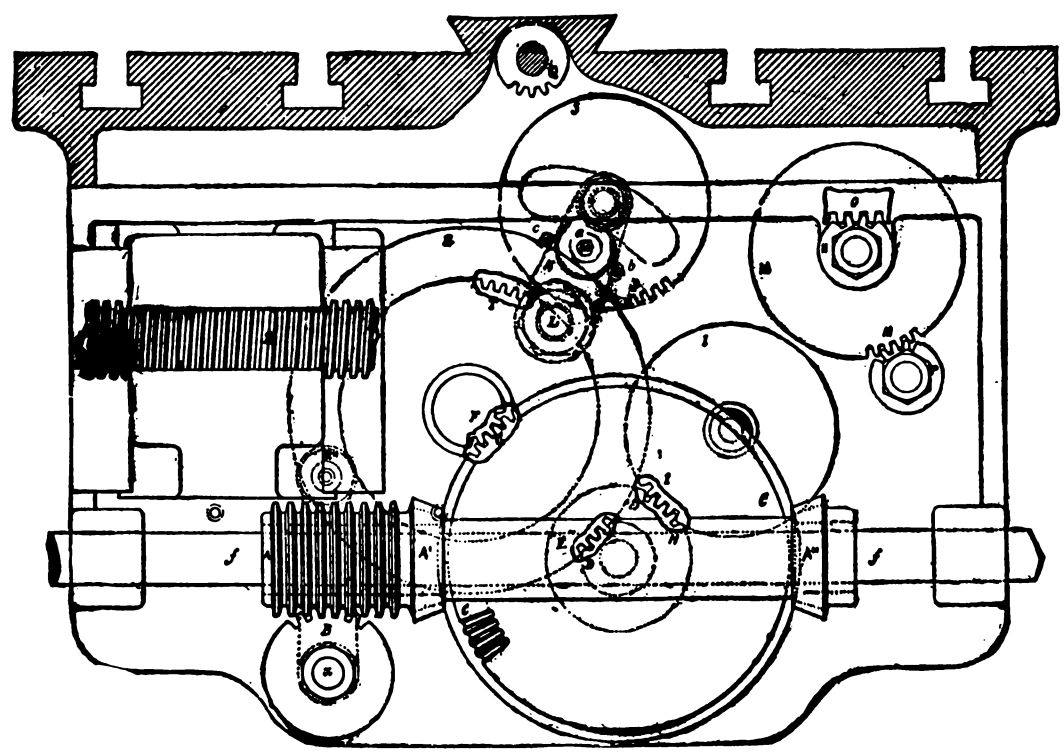

Fig. 582.

screw being operated by hand wheel G. B is provided with the V slideways R, which slide upon corresponding V slides R′ upon C; P is a lug cast upon C, and K is a screw threaded in B. When the end of screw K abuts against P, the motion of S, and, therefore, of the cutting tool T, towards the work is arrested, hence when the tool is adjusted to the proper depth of cut, K is operated to abut firmly against P, and successive pieces may be turned to the same diameter without requiring each piece to be measured for diameter. N is the handle for opening and closing the nut for

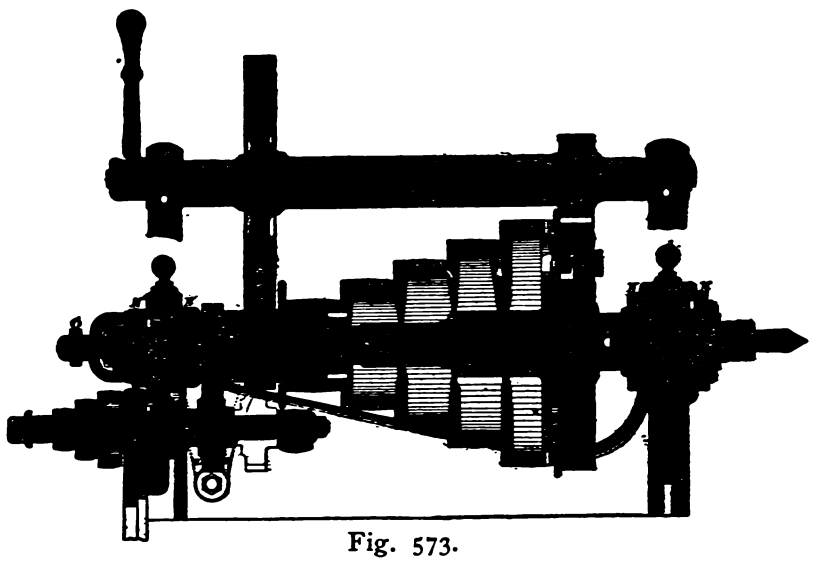

Fig. 573.

the feed screw Q, and Z is the wheel for the hand feed traverse. The length of cross feed motion is determined by the length of the cross V slides R′.

This class of rest possesses the advantage that no lost motion in the slides occurs by reason of the wear, because the weight keeps the parts in constant contact notwithstanding such wear; on the other hand, however, the slide Vs sustain the extra wear due to the weight W in addition to the weight of the carriage. Lathes of this class are intended for light work, and are less suited for boring than for plain turning; they are, however, very convenient, and are preferred by many to any other kind of lathe for short and light work.

The tool rest being removable may be supplanted by other special forms of rest. Thus Figs. 579 and 580 represent a special rest for carrying two tools to cut pieces of work to the exact same length. Bolts D and E are to secure the rest A to the elevating rest, and C C are the clamps for the two tools B.

Fig. 581 represents a cross sectional view of the Putnam Tool Company's gibbed elevating rest, there being a gib on the underneath side of the front shear. The elevating screw is pivoted by a ball joint. By employing a gib instead of a weight, the bed may be provided with cross girts or ribs joining the two sides of the shear, thus giving much greater stiffness to it.

Figs. 582, 583, and 584 represent a lathe feed motion by William Munzer, of New York. The object in this motion is to insure that no two feeds can be put into operation simultaneously, because putting the feed in motion in one direction throws it out of gear for either of the others. Another object is to have the transmitting motion as direct as possible so as to avoid the rotation of any wheels not actually necessary for the transmission of the motion; and a third object is to enable the throwing out of gear of all wheels (when no feed motion at all is required) without leaving the apron.

The means employed to effect these objects are as follows:—

In Fig. 582, *f* represents the independent feed spindle and S the lead-screw; *f* is splined to drive A, A′ and A″, which is a sleeve in one piece, and consists of a circular rack at A, a bevel pinion at A′, and a second bevel pinion at A″. This sleeve may be operated in either direction along *f* by rotating the pinion B. As shown in the cut A′ and A″ are both out of gear with the bevel-wheel C, but if B be rotated to the right then A′ will be in gear with C, or if it be operated to the left then A″ will be in gear with C. Now the direction of rotation of C will be governed by which pinion, A′ or A″, drives it, and these are the means by which the direction of the feed traverse and also of the cross feed is determined.

If none of the feeds are required to operate, the sleeve occupies the position shown in the cut, and the circular rack at A simply rotates while B and all other parts remain at rest. On the same central pin as C is the pinion D driving a spur gear E″. On the same centre pin as E is the gear F driving G, which is on the same central pin as C and D. The gear H is fixed to and rotates with G and drives I; all these gears serving to reduce the speed of motion when operating to feed the carriage traverse in either direction.

A gear J is carried on the end of a lever K, being pivoted at L. In the position shown J is out of gear with all gears, but it may be swung to the right so as to engage with wheel I and wheel M, and convey the motion of I to M. Upon the same spindle as M is the pinion N, engaging with the rack O, which is fast on the lathe bed. This completes the automatic feed traverse.

For a hand feed traverse, pinion P is employed to drive M, which is fast to N. The cross feed is self-acted by moving lever K to the left, causing it to engage with pinion Q as well as with T, Q being fast on the cross-feed screw. To lock J in either of its three positions there is provided on lever K a spring locking pin R, shown clearly in Fig. 584, which represents an irregular section of the gearing viewed from the headstock of the lathe. The pin R is pressed inward by the spiral spring shown, and has a conical end fitting into holes provided in the apron to receive it. There are three of these holes, shown in dotted lines at *a b c* in Fig. 582. When the pin is in *a* the lever K, and therefore wheel J, Fig. 582, is locked out of gear; when it is in hole *b* wheel J is locked in gear with I and M, and when it is in *c* the wheel J is in gear with T and Q, and the cross feed is actuated.

A similar locking device is provided for the pinion B for actuating A; thus in Fig. 582 B is the lever, the spring pin being at R″; or referring to Fig. 584, X is the lever fast at *x* on the pin driving B, and R″ is the spring pin.

The nut for the lead screw is secured either in or out of gear with the screw in the same manner, *x′*, Fig. 583, being the lever and R′ the spring pin.

In screw cutting the cutting tool requires to be withdrawn from the thread while the carriage traverses back, and it is somewhat difficult to know just how far to move the tool in again in order to put on a proper depth of cut. To facilitate this the device shown

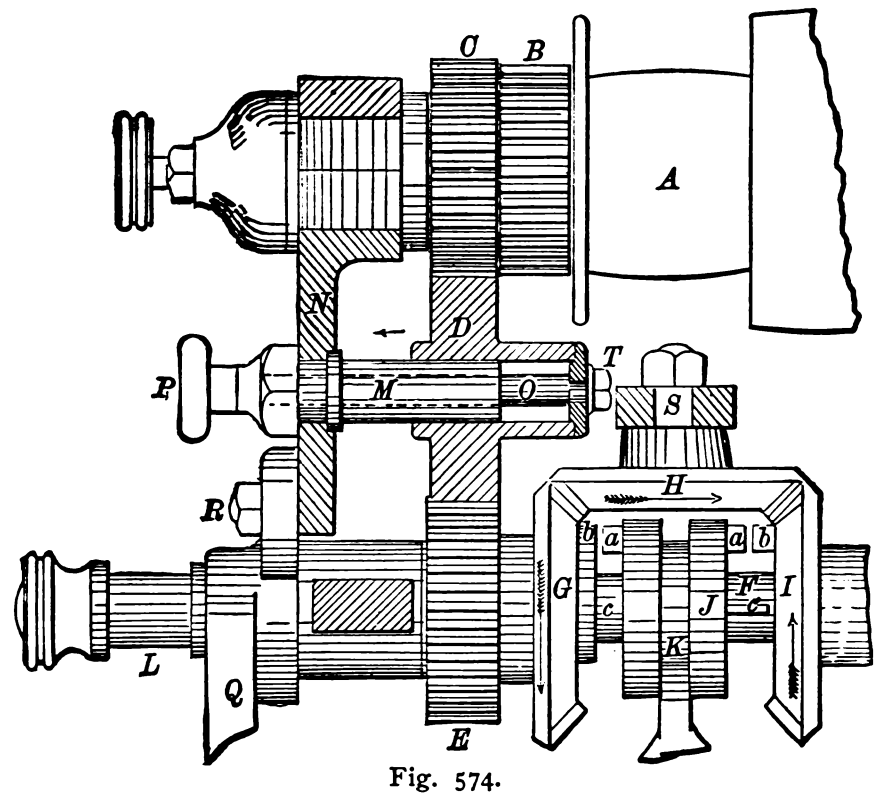

Fig. 574.

in Fig. 585 (which is taken from the "American Machinist") is sometimes employed.

It consists of a ring C inserted between the cross slide D and the handle hub B having journal bearing on and rotating with the latter. When the first cut is put on, the mark on C is coincident with that on D, and the ring is then, while the first cut is traversing, moved (supposing the cross-feed screw to have a right-hand thread) to the left, as shown in the figure, to the amount the handle will be required to move to the right to put on the next

cut, and when the next cut is put on the handle will be moved the distance it was moved to withdraw the tool for the back traverse, and in addition enough to make the marks coincide, then while the second cut is being taken the ring is again moved to the left, as in the cut, to give the depth of cut for the next traverse, and so on.

If the cross feed screw has a left-hand thread, the mark on the ring would require to be moved to the right instead of to the left of the mark on D. It is obvious that this answers the same purpose, but is more exact than the chalk mark before referred to, and, indeed, that chalk mark could be used in the same way, leaving the chalk mark D and rubbing out that on C while the cut is proceeding and making a new one for the next cut.

Another device for use on lathes specially designed for screw cutting is shown in Fig. 586, in which A represents the cross feed screw. It is fast to the notched wheel B, and is operated by it in the usual way. C is a short screw which provides journal bearing for the screw A by a plain hole. It is screwed on the outside, and the plate in which it fits acts as its nut. It is fast to the handle D, and is in fact operated by it. The handle or lever is provided with a catch E, pivoted in the enclosed box F, which also contains a means of detaining the catch in the notches of the wheel, or of holding it free from the same when it is placed clear. If, then, the lever D be moved back and forth, the feed screw A, and hence the slide rest, will be operated; while, if the catch be placed in one of the notches on the wheel B, both the screws, A and C, will act to operate the rests. When, therefore, the tool is set to touch the diameter of the work, the catch E is lifted and the feed wheel B rotated, putting on the cut until the catch E will fall into the next notch in B, the lever D resting in the meantime on the stud G. When the cut is carried along the work to the required distance the tool is withdrawn by moving D over until it rests upon stud or stop H. While the slide rest is traversing back E is lifted and B rotated so that E will fall into the next notch, and when the tool starts forward again D is moved over from H to G, as shown in the figure, and the tool cut is put on.

When the device is not required to be used E is thrown out, D rests on E, and the feed is operated in the ordinary manner.

A simple attachment for regulating on a slide rest the depth of tool cut in screw cutting, or for adjusting the cut to a requisite diameter when a number of pieces are to be turned to diameter by a finishing cut, is shown in Fig. 587, in which B represents the slide rest carriage, and E the cross slide on which the slide rest A is traversed by means of the cross feed screw *f*. A screw is screwed into the rest, as shown, carrying the two circular milled edge nuts R P; the screw passes an easy fit through the piece C, which is capable of being fixed in any position along the slide E by means of the set screw S; the nut R is set in such a position on the screw that it will abut against C when the tool is clear of the work surface (for the back traverse), while P may be used in two ways:—First it may be set so that when it comes against C the thread is cut to the required depth, and thus act as stop to give the thread depth without trying the gauge; or it may be used to answer the same purpose and in the same way as the ring C in Fig. 585.

The use of this device as a stop to gauge the thread depth is confined to such lengths of work as enable the tool to cut several pieces without requiring regrinding, because when the tool is removed to grind it, it is impracticable to set it exactly the same distance out from the tool post, hence the adjustment of P becomes destroyed. It is better, therefore, in most cases where a number of threads of equal pitch and diameter are to be cut, to rough them all out, cutting the threads a little above the gauge diameter so as to leave a finishing cut to be taken. In roughing out, however, the nut P may still be used to regulate the depth.

For the finishing cut the tool may be ground and P adjusted to give the requisite depth of cut, taking a single traverse over each thread to finish it. This, of course, preserves the tool and enables it to finish a larger number of threads without regrinding, and the consequent readjustment of P.

It is obvious that the nut P may be employed in the same manner to turn a number of plain pieces to an equal diameter.

It is preferable in a device of this kind, however, to employ the two adjusting nuts P and Q in Fig. 588, Q being a clamp nut that can be closed by a screw so as to firmly grip the threaded stud. Q is adjusted so that when P abuts against it the tool will cut to the correct diameter when it is moved in as far as nuts P Q will permit. The use of the second nut P is as follows:—Suppose a first cut has been taken and P may be screwed up to just meet the face of clamp C. Then while the carriage is traversing, P may be screwed back towards Q sufficiently to put on the next cut, and so on, so that P is used to adjust the depths of the roughing, and Q that of the finishing cut.

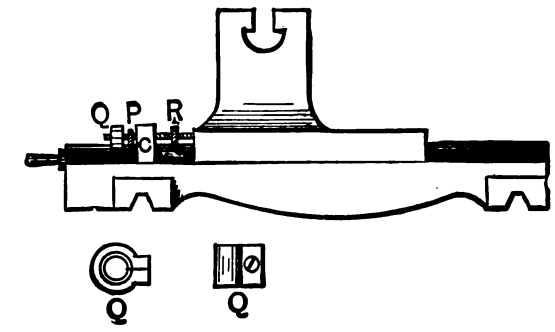

Fig. 588.

Sometimes a feed motion to a slide rest is improvised by what is known as the *star feed*, the principle of action of which is as follows: Upon the outer end of the feed screw of the boring bar or slide rest, as the case may be, is fastened a piece of iron plate, which, from having the form in which stars are usually represented, is called the star. If the feed is for a slide rest a pin is fastened to the lathe face plate or other revolving part, in such a position that during the portion of the revolution in which it passes the star it will strike one of the star wings, and move it around sufficiently to bring the next wing into position to be struck by the pin during its succeeding revolution. When the feed is applied to a revolving boring bar the construction is the same, but in this case the pin is stationary and the star revolves with the feed screw of the bar.

In Fig. 589 is shown a star feed applied to a slide rest. A is the slide rest, upon the end of the feed screw of which the star, B, is fitted. C is a pin attached to the face plate of the lathe, which, as it revolves, strikes one of the star wings, causing it to partly rotate, and thus move the feed screw. The amount of rotation of the feed screw will depend upon the size of the star and how far the circle described by the pin C intersects the circle described by the extreme points of the star wings. Thus the circles denoted by D E show the path of the pin C; the circle F H the path of the star points, and the distance from F to G the amount which one intersects the other. It follows that at each revolution of C an arm or wing of the star will be carried from the point G to point F, which in this case is a sixth of a revolution. If more feed is required, we may move the pin C so that it may describe a smaller circle than D E, and cause it to intersect F H to a greater extent, in which case it will move the star through a greater portion of its revolution, striking every other wing and doubling the amount of feed.

It will be observed that the points F and G are both below the horizontal level of the slide rest's feed screw, and therefore that the sliding motion of the pin C upon the face of the star wings will be from the centre towards the points. This is better, because the motion is easier and involves less friction than would be the case if the pin contact first approached and then receded from the centre, a remark which applies equally to all forms of gearing, for a star feed is only a form of gearing in which the star represents a tooth wheel, and the pin a tooth in a wheel or a rack, according to whether its line of motion is a circle or a straight line.

It is obvious that in designing a star feed, the pitch of the feed screw is of primary importance. Suppose, for example, that the pitch of a slide rest feed screw is 4 to an inch, and we require to feed the tool an inch to every 24 lathe revolutions; then the star must have 6 wings, because each revolution of the screw will move the rest $\frac{1}{6}$ in., while each revolution of the pin C will move the star $\frac{1}{6}$ of a revolution, and $4 \times 6 = 24$. To obtain a very coarse feed the star attachment would require to have two multiplying cogs placed between it and the feed screw, the smaller of the cogs being placed upon the feed screw.

In many lathes of European design, the feeds or some of them,

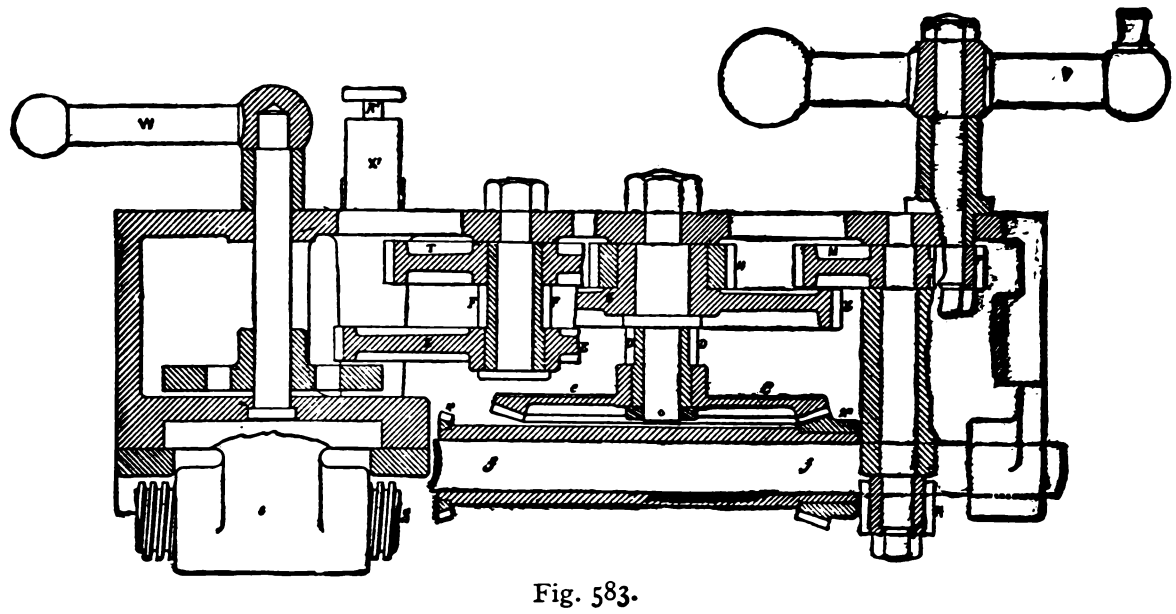

Fig. 583.

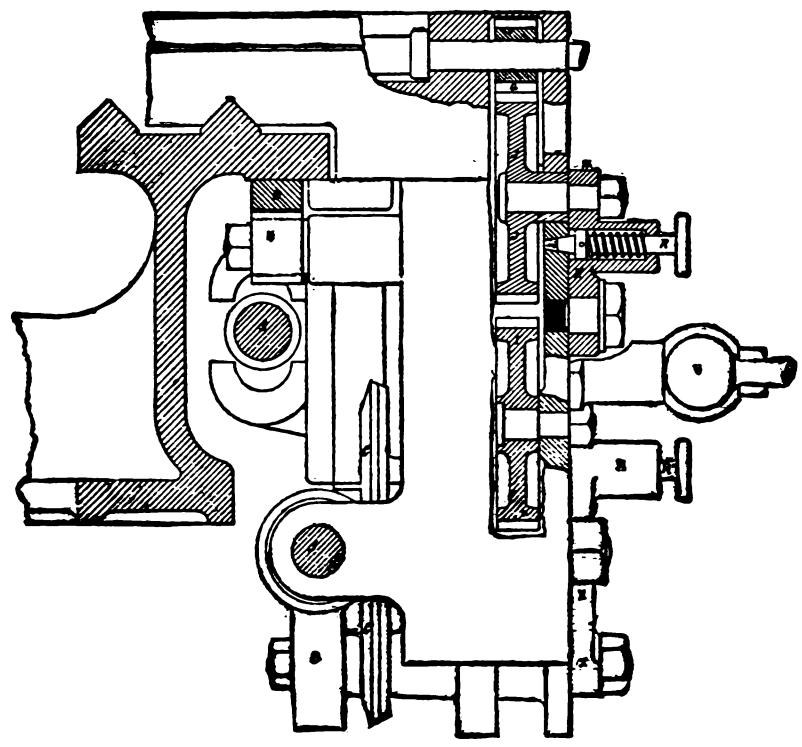

Fig. 584.

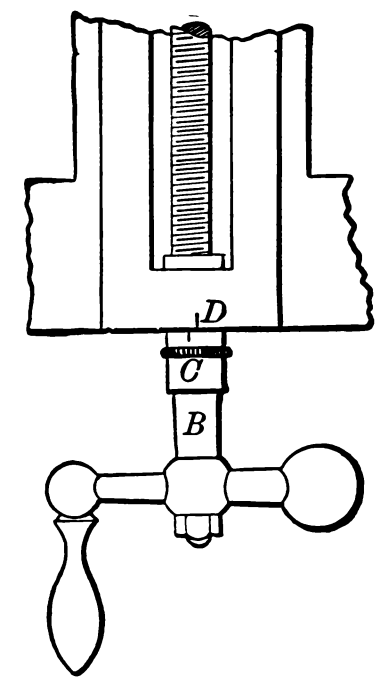

Fig. 585.

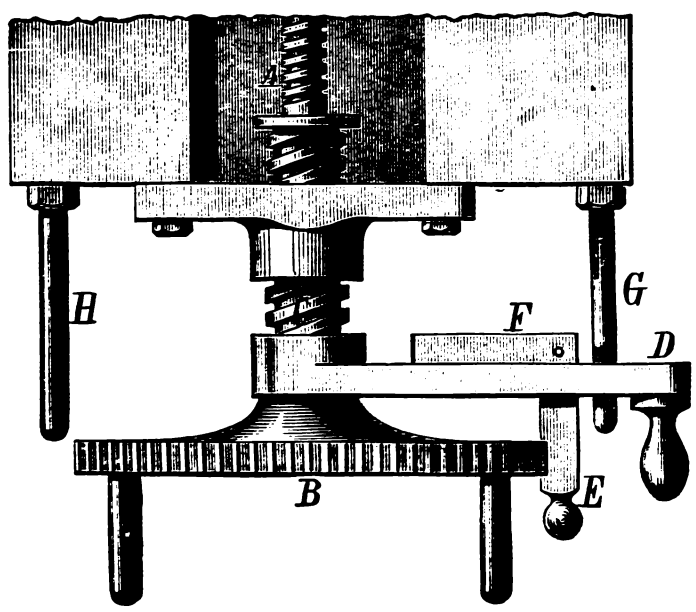

Fig. 586.

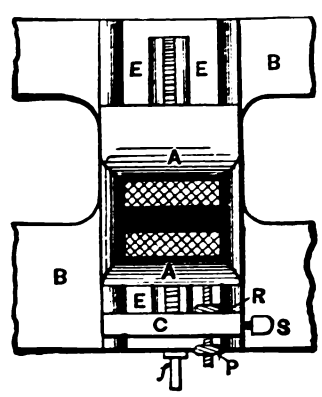

Fig. 587.

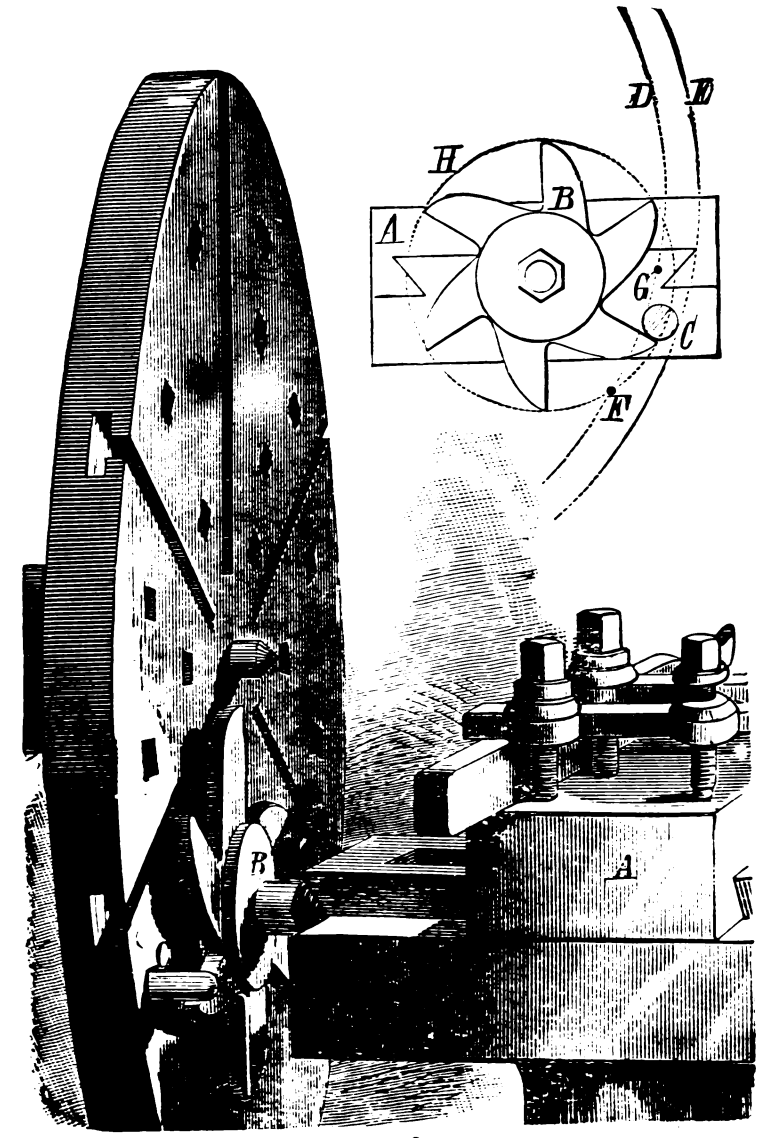

Fig. 589.

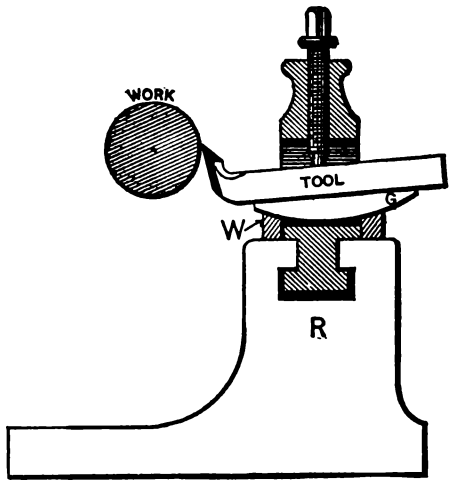

Fig. 591.

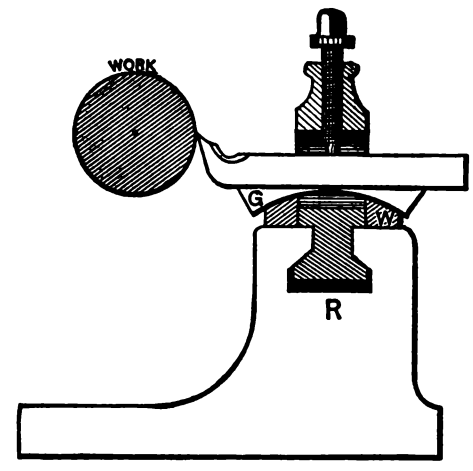

Fig. 592.

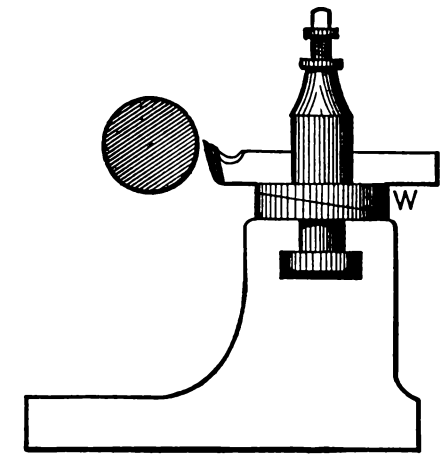

Fig. 593.

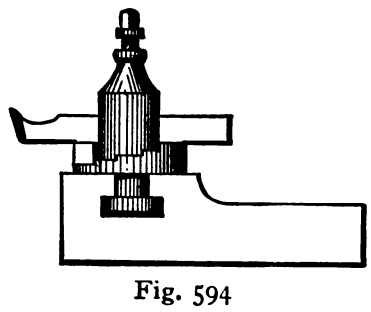

Fig. 594

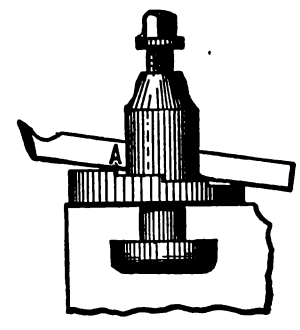

Fig. 595.

Fig. 596.

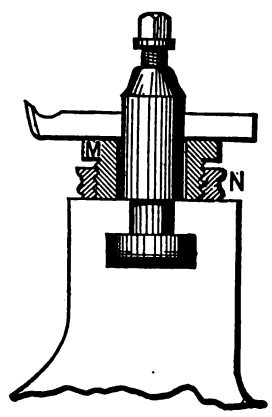

Fig. 597.

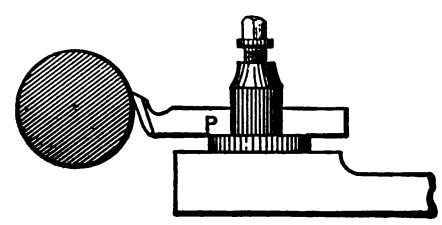

Fig. 598.

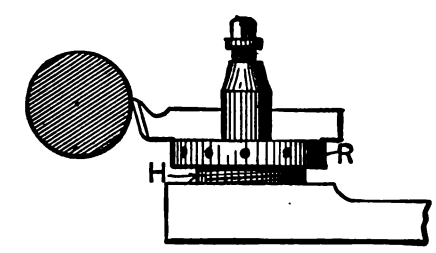

Fig. 599.

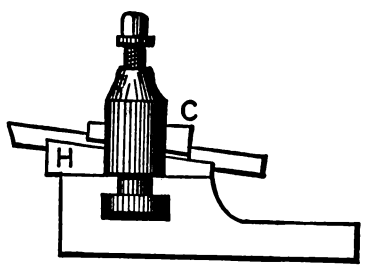

Fig. 600.

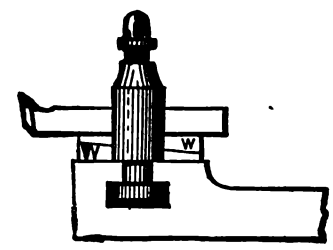

Fig. 601.

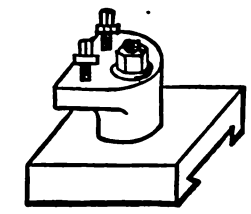

Fig. 602.

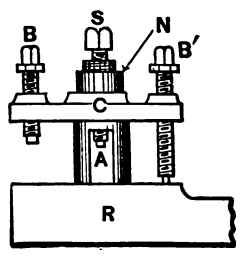

Fig. 603.

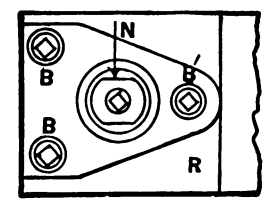

Fig. 604.

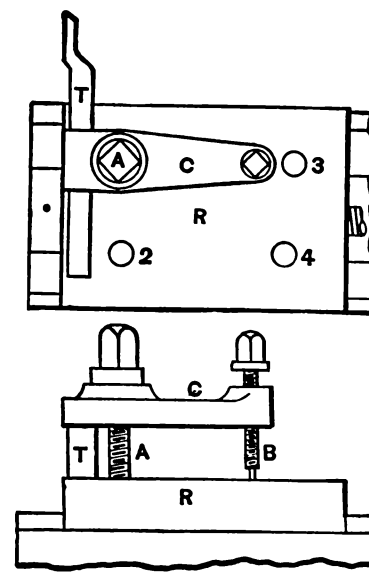

Fig. 605.

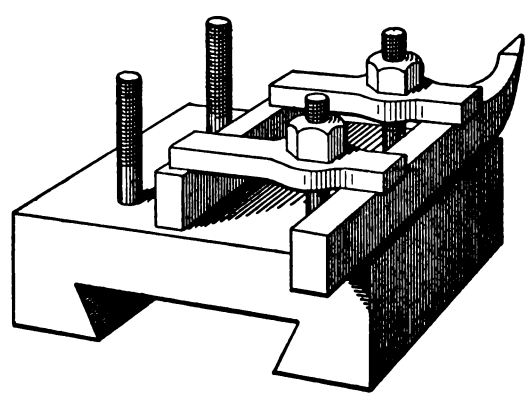

Fig. 606.

are actuated by ratchet handles, operated by an overhead shaft, having arms which rock back and forth. Thus in Fig. 590 is a lathe on which there is provided at A a crank disc, carrying in a dovetail slot a pin P, for rocking the overhead shaft from whose arms a chain is attached which may be connected to the ratchet handle shown on the cross-feed screw, the weight being for the purpose of carrying that handle down while the chain pulls it up. To regulate the amount of feed the pin P is adjusted in the slot in A, or the chain may be attached in different positions along the length of the ratchet arm, the weight being provided with a set screw so that it may be set in any required position along the ratchet arm.

TOOL-HOLDING DEVICES.—Perhaps no part of a lathe is found in American practice with so many different forms of construction as the device for holding the cutting tool. The requirements for a lathe to be used on light work and where frequent changes in the position of the tool are necessary, are quite different from those for a lathe intended to take as heavy a cut as the lathe will properly drive, and wherein tools having the cutting edge at times standing a long way out from the tool post (as sometimes occurs in the use of boring tools). In the former case a single holding screw will suffice, possessing the advantage that the tool may be quickly inserted, adjusted for height and set to one

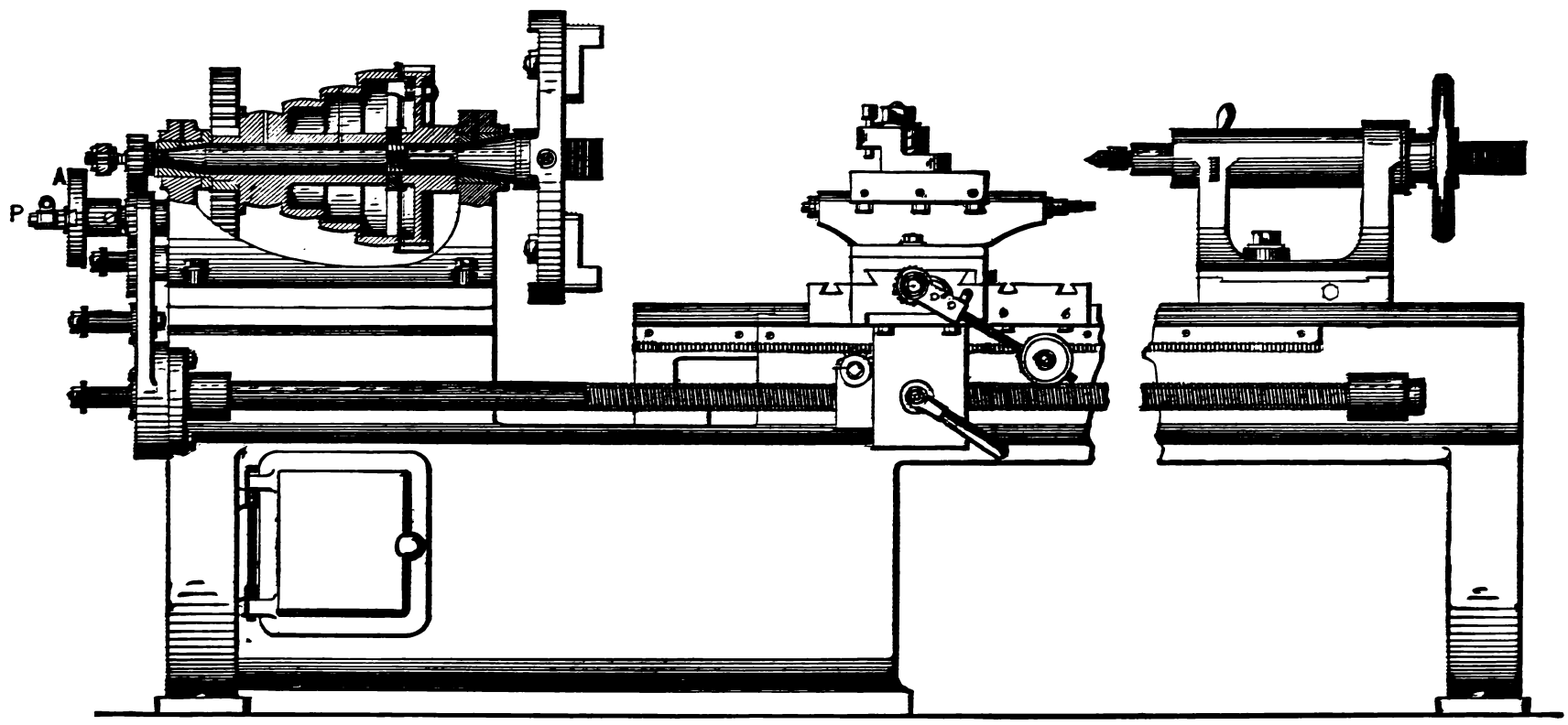

Fig. 590.

side or the other, with a range of motion which often permits of a tool that has taken a parallel cut being moved in position to capacitate it to take a facing one, which would not be the case were its capacity for side adjustment limited.

In the case of the common American lathe having a self-acting feed and no compound rest, the tool post is usually employed, the rest being provided with a T slot such as shown in Fig. 577. This enables the tool post to be moved from side to side of the tool rest, and swing around in any required position. In connection with such tool posts various contrivances are employed to enable the height of the cutting edge of the tool to be readily adjusted. Thus in the Fig. 591, the tool post is surrounded by a cupped washer W, and through the slot in the tool post passes a gib G, which may be moved endways in the slot and thus elevates or depresses the tool point.

The objection to this is that the tool is not lifted parallel, or in other words is caused to stand out of its proper horizontal position which alters the clearance of the tool, and by presenting the angles forming the tool edge in an improper position, with relation to the work, impair its cutting qualification, as will be shown hereafter when treating of lathe cutting tools.

An improvement on this form has been pointed out by Professor John E. Sweet, whose device is shown in Fig. 592. Here the washer or ring is rounded and the bottom surface of the gib is hollowed, so that chips or dirt will to a great extent fall off, and every time the tool post is swung the gib acts to push off whatever dirt may lodge on the washer.

In the design shown in Fig. 593, the tool rests upon two washers W that are tapered, and its height is adjusted by revolving one of these washers, it being obvious that the limit of action to depress the tool point is obtained when the two thin sides of the washers are placed together, and on the same side of the tool post as the cutting edge of the tool, while the limit of action to raise the tool point is obtained when the washers have their thick sides together and nearest to the tool point.

Here again the tool is thrown out of level, and to obviate this difficulty the stepped washer shown in Fig. 594 may be used, the steps on opposite sides of the washer being of an equal height. This enables the tool to be raised or lowered without being set out of the horizontal position; but it has the defect that the adjustment cannot be made any finer than the height of the steps, and if the height is made to vary but slightly, in order to refine, as it were, the adjustment, the range of tool elevation or depression is correspondingly limited. Another form of stepped washer is shown in Fig. 595, in which no two steps are of the same height. This affords a wider range of adjustment, because the same two steps will alter the height of the tool by simply turning the washer one-half revolution. It has two defects, however; first, the least amount of adjustment is that due to the difference in height of the steps; and, second, when the tool is elevated it grips the washer at A, so that the tool is not supported across the full width of face of the washer, as it should be.

A defect common to all devices in which the tool is thrown out of level, is that the binding screw does not bed fair upon the tool, and as a result it is apt, if screwed home very firmly, as is necessary to hold boring tools that stand far out from the tool post, to spread the screw end as in Fig. 596, or to bend it.

A very convenient tool-adjusting device is shown in Fig. 597. It consists of a threaded ring N receiving the threaded bush M, the tool height being adjusted by screwing or unscrewing one within the other.

The objection to this is, that it occupies so much vertical height that there is not always room to admit it, which occurs, for example, in compound slide rests on small lathes.

On these rests, therefore, a single washer is more frequently used, which answers very well when the tool post is in a slot, so that it can be moved from side to side of the rest as occasion may require. When, however, the position of the tool post is fixed it has the disadvantage that the point P, Fig. 598, where the tool takes its leverage, is too far removed, and the tool is therefore liable to bend or spring from the pressure of the cut.

In Fig. 599 is an elevating device sometimes used on the compound rests of large lathes. The top of the rest is provided with a hub H, threaded externally to receive a ring nut R, around whose edge there are numerous holes to receive a pin for operating the nut. The tool-post is situated central in the hub. When the tool is loose the ring nut can be operated by hand or the tool may be gripped lightly and the ring nut operated by a pin. The

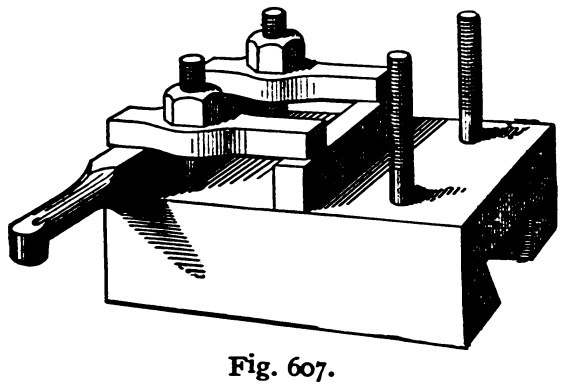

Fig. 607.

level of the tool is here maintained; it is supported to about the edge of the rest on account of the large diameter of the ring nut, and a very delicate adjustment for height can be made, but such a device is only suitable for large lathes on account of the depth of the ring nut and hub.

On small slide-rests the device shown in Fig. 600 is often found. It consists of a holder H, in which is cut a seat for the tool, this seat being inclined to give the piece of steel used as a tool a certain constant degree of angle, and at the same time to permit of the tool being moved endwise in the holder to set it for height; but, as the tool requires to be pushed farther and farther through the holder to raise it, it is not so well supported as is desirable when slight tools are used, unless the holder is made long, so as to pass through the tool post with the tool. Again, it does not support the tool sideways unless the tool steel is dressed up and closely fits the groove in the holder.

In Fig. 601 W W are two inverted wedges which afford an accurate adjustment, but the range is limited, because if the wedges have much taper they are apt to move endways when the tool is fastened.

A convenient device for the compound rests of small lathes is shown in Fig. 602. It consists of a holder pivoted upon a central post and carrying two tool-binding screws, hence it can be revolved to set the tool in any required position. A similar device is shown in Fig. 603, in which the central post is slotted at A to receive the tool, and also carries a plate C, held by the nut N, and provided with tool-holding screws B and B', which abut against the top of the rest, a top view of the device being shown in Fig. 604. Plate C may thus be swung around to set the tool in any required position on either side of the rest.

In Maudslay's slide rest, the tool clamp shown in Fig. 605 is employed. Screws A are employed to grip the tool moderately firm, and a turn of screws B (whose ends abut against the top of the slide rest) very firmly secures the tool, since it moves the clamp C as a lever, whose fulcrum is the screw A.

Figs. 606 and 607 represent the Whitworth tool clamp, the clamping plates of which change about upon the four studs, and are supported at their inner ends by a block equal in height to the height of the tool steel.

Figs. 608, 609, 610, and 611 represent the "Lipe" tool post, so called from the name of its inventor. The top of the cross slide is cylindrical, and is bored to receive the tool post which has a cylindrical stem. The cylindrical part of the tool post is split vertically, and has two lips, the bolt D passing through one lip and threading into the other, so that by operating bolt D the tool post may be gripped very firmly or released, so that it may be revolved to bring the tool into any required position after it is fastened in the tool post, which is a great advantage because the tool is brought to a solid seating in the post before its height is adjusted, and will not therefore be altered in height by setting up the set screws as often occurs in ordinary tool posts. From the shape of the tool post, the tool may be gripped by one set screw only, when required for light duty, or by two set screws for

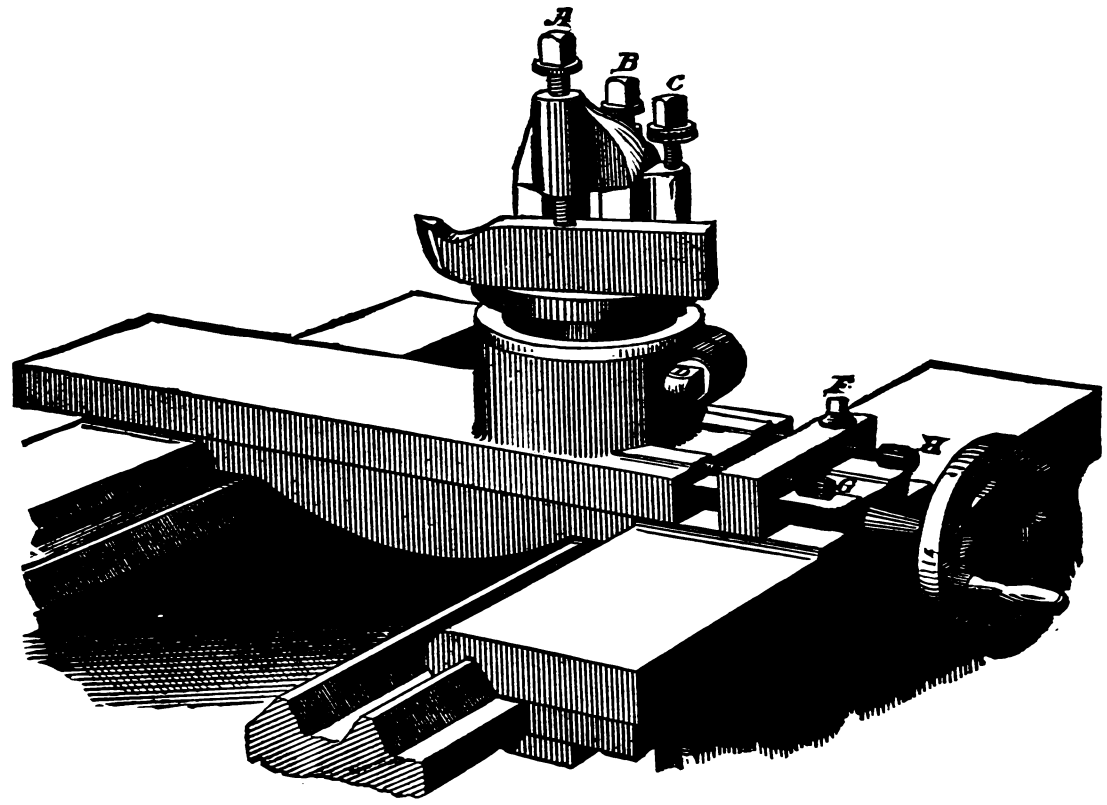

Fig. 608.

heavy duty or for boring, while in either case it is supported clear to the edge of the rest.

Fig. 608 shows the tool in position, held by a single screw, for work requiring the tool to be close up to the work driver. In Fig. 609 a tool is shown held as is required by work between centres, but both set-screws are used. Fig. 610 shows a tool in position for boring, two set-screws being used. Fig. 611 shows a tool being held for the same purpose, but by a single screw, and it will be observed that the advantage of the second set-screw is obtained without in any way sacrificing the handiness of the post, when used with a single screw. Whether one or two set-screws are used, the boring tool may be forged from a single bar of octagon steel, which can be seated in a piece like that shown at E in Fig. 610, which is grooved so as to receive and hold the tool. As is well known, boring tools are the most troublesome both to forge and to adjust in the lathe, and, as the result, a light tool is often used because no other is at hand and it is costly to make a new one. When, however, the tool can be forged from a plain piece of steel, these objections are overcome, and a sufficient number of tools may be had so that one can always be found suitable for any ordinary sized hole, the object being to use as rigid a tool as can be got into the hole bored.

The feature of maintaining the tool level is of great importance in boring work, because when the tool requires to be set out of level to adjust its height, it will generally strike against the mouth of the hole if the latter is of much depth. This annoyance is also frequently met with in boring tools which are forged out of rectangular steel, because the rounded stem is generally left taper. The largest end of the taper is generally nearest the tool post. Hence the capacity to use octagon steel and keep it level while adjusting its height, added to the fact that the tool is supported clear to the edge of the tool rest, and the tool post is so blocked as to virtually become a part of the rest, constitute a very important advantage.

A common device on large lathes is shown in Fig. 612, the two clamps being shown in position for outside turning, and being changed (so as to stand at a right angle to the position they occupy in the figure) for holding boring tools. The bolts are enveloped by spiral springs which support the clamps.

Figs. 613 and 614 represent the tool holders employed in the Brown and Sharpe small screw machines. In the front rest, Fig. 613, the piece R receives two adjusting and tool-gripping screws S, upon which sits the gib G, and upon this the tool is placed. The surface E at the top of the tool post slot is curved so that it will bear upon the top of the tool at a point only. The tool is here supported along the full length of the gib, and there is no set-screw at the top of the tool post, which enables a much more unobstructed view of the tool.

Fig. 614 is the tool post used at the back of the rest, the piece B passing through the tool post slot. The tool rests upon the top of screw E and upon the top of B at F, and is secured by set-screw S; its height is therefore adjusted by means of screw E, which is threaded in B. The set-screw S is not in this case objectionable, because it is at the back of the rest, and therefore does not obstruct the view of the work, while it is at the same time convenient to get at.

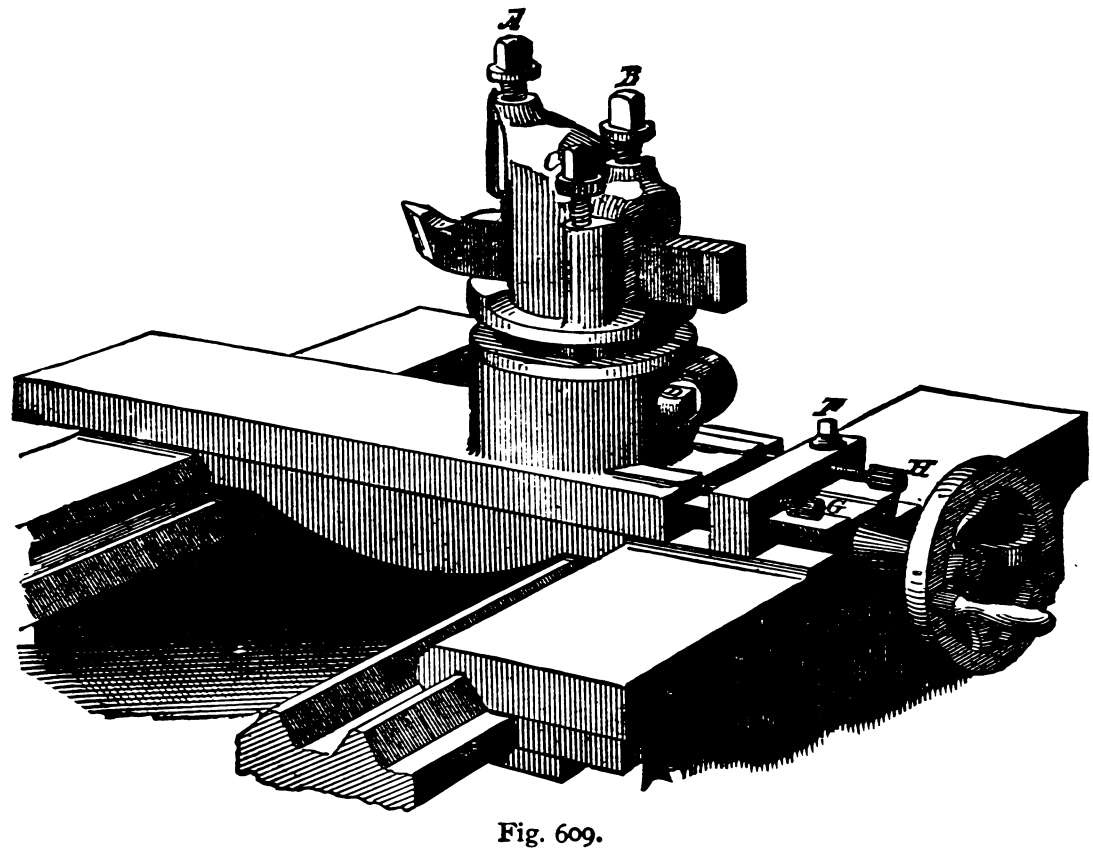

Fig. 609.

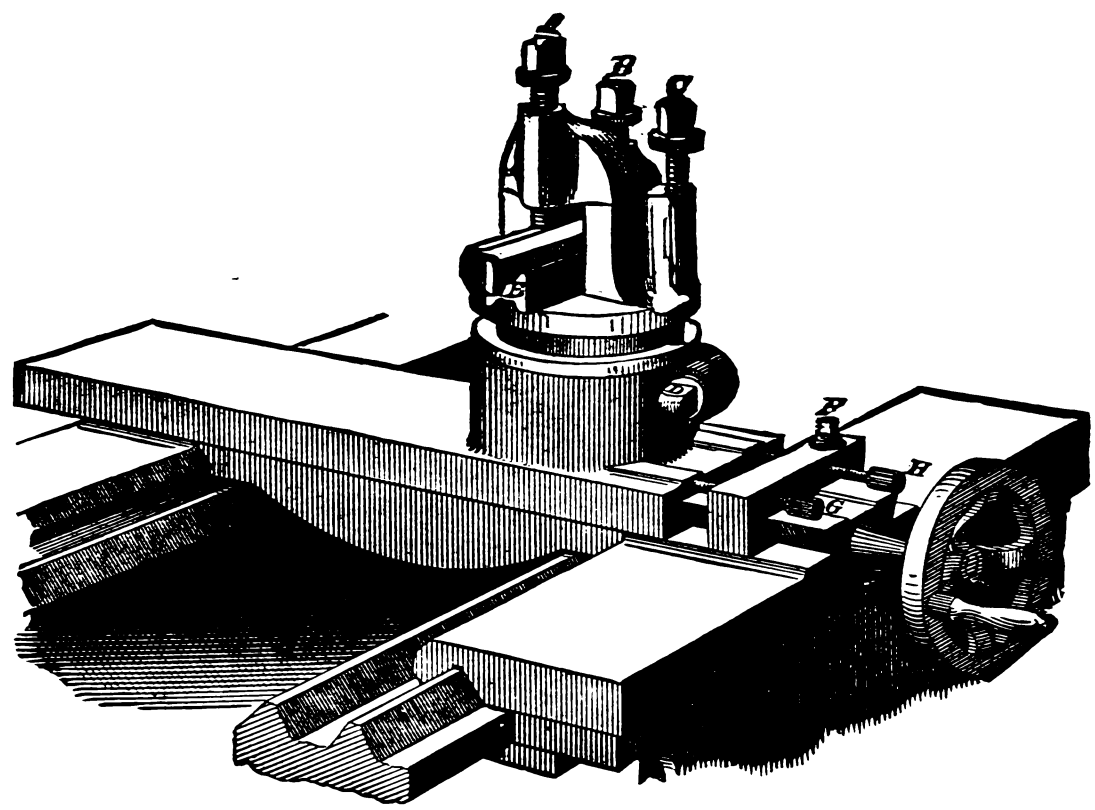

Fig. 610.

When the screw for traversing a lathe carriage is used for plain feeding, it is termed the feed screw, but when it is used to cut threads it is termed the lead screw.

A lead screw should be used for screw cutting only, so that it may be preserved as much as possible from wear. As the greater portion of threads cut in a lathe of a given size are short in com-

parison with the length of the lathe, it follows that the part of the lead screw that is in operation when the carriage or saddle is traversing over short work is most worn, while the other end is least worn, hence it is not unusual to so construct the screw and

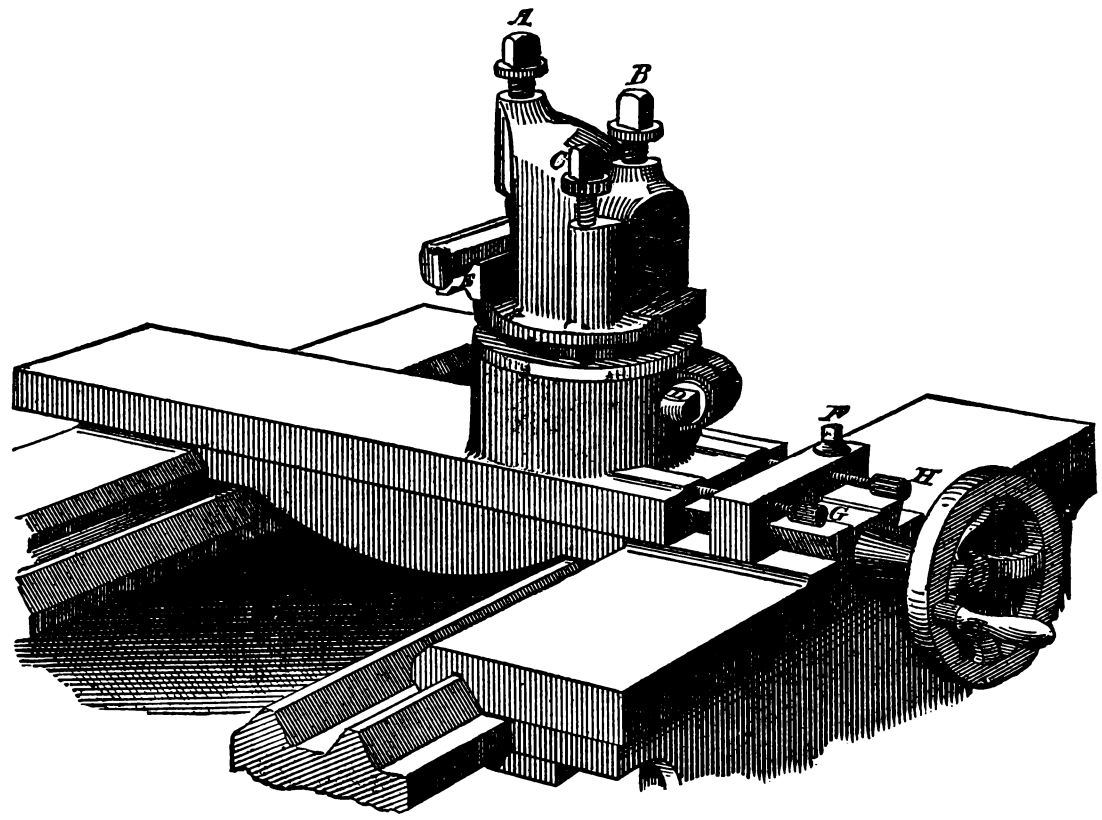

Fig. 611.

its bearings that it may be changed end for end in the lathe, to equalize the wear. By turning a lead screw end for end, there-

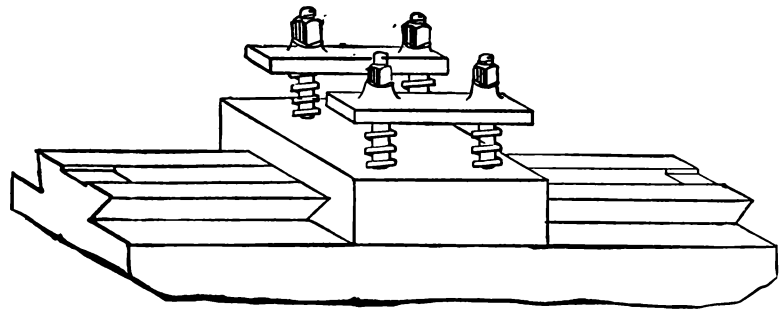

Fig. 612.

fore, to equalize the wear, the middle of the length of the screw will become the least worn, and, therefore, the most true. Hence it is better to use one end of the lead screw for general work, and to reverse it and use the other end only for screws requiring to be of very correct pitch.

To obviate the wear as much as possible the feed nut should embrace as great a length of the screw as convenient, and should be of a material that will suffer more from wear than the lead screw, or in other words shall relieve the feed screw from wear as much as possible. The wear on the nut being equal from end to end, the wearing away of one side of its thread does not vary its pitch; hence the only consideration as to its wearing qualification are the expense of its renewal and the length of time that may occur between its being engaged with the lead screw and giving motion to the lathe carriage, this time increasing in proportion as the nut thread is worn. Under quick speeds or when the lathe is in single gear, the rotation of the feed screw is so quick that not much time is lost before the carriage feeds, but when the back gear is in operation at the slowest speeds, the loss of time due to a nut much worn is an item of importance.

In some lathes the feed screw is employed for screw cutting and for operating an independent feed also. This is accomplished by cutting a feather way or spline along it, so that a worm having journal bearing in the apron of the rest carriage may envelop the lead screw and be driven by it, through the medium of a feather fast into the worm gear. The motion obtained from the worm gear is transferred through suitable gearing to the rack pinion.

The spline is cut deeper than the thread, so as to prevent the latter as far as possible from wear, by reason of the friction of the spline.

The lead screw if long should be supported, to prevent its sagging of its own weight. In some cases the lead screw is sup-

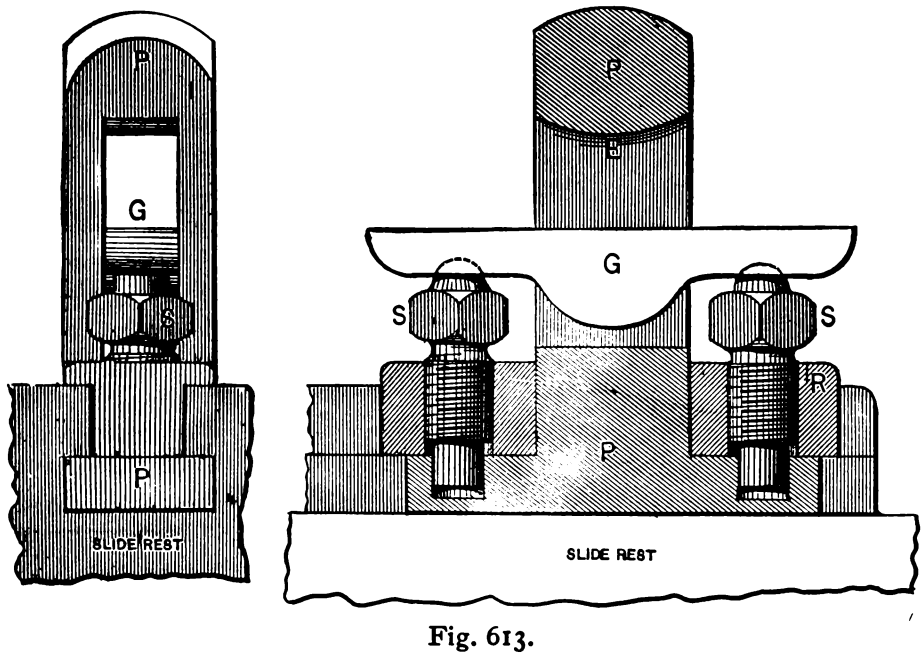

Fig. 613.

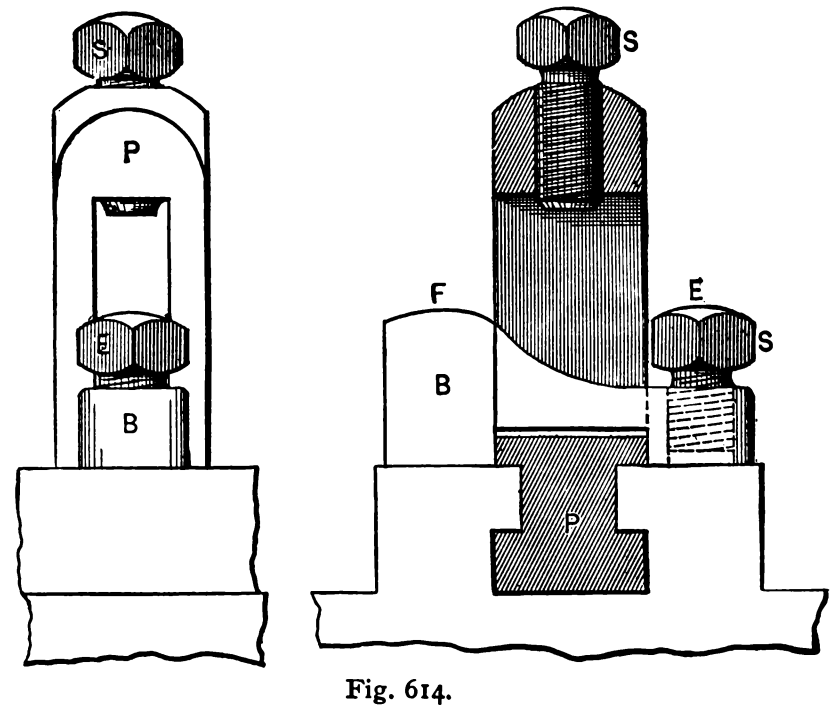

Fig. 614.

ported in a trough along its whole length, as is done in the Sellers lathe. In other cases, bearings hanging from the V-slides, and movable along the bed, are employed.

It is desirable that the feed screw and nut be as near the middle of the carriage as possible, so that it shall pull the carriage at as short a leverage as possible, thus avoiding the liability to tilt or twist the carriage; but it is not practicable to place it midway between the lathe shears, because in that case the cuttings, &c., from the work would fall upon it, and cause excessive and rapid wear of the screw and nut.

In general the lead screw is located either in front, or at the back of the lathe, and in considering the more desirable of the two locations, we have as follows:

The feed nut should obviously remain axially true with the lead screw, as by reason of the extra weight of the front of the carriage, both it and the lathe shears wear most at the front, and the carriage, therefore, falls to the amount of its own wear and the wear of the shears. If the lead screw is used to feed with (as it should not be), the nut wears coincidently with the carriage and the shears, and the screw alignment is not impaired; but with an independent feed, only a small portion of the carriage traversing is done with the lead screw, hence the carriage lowers from the wear due to the independent feeding, and when the lead screw comes to be used its nut is not in true alignment with it. It is obviously preferable, then, to place the lead screw at the back, where the carriage and shears wear the least. Furthermore, this relieves the carriage front from the weight of the nut, &c., tending to equalize the back and front wear, while removing the nut-operating device from the front to the back of the shears, and thus reducing the number of handles in front, and thus avoid complication in small lathes.

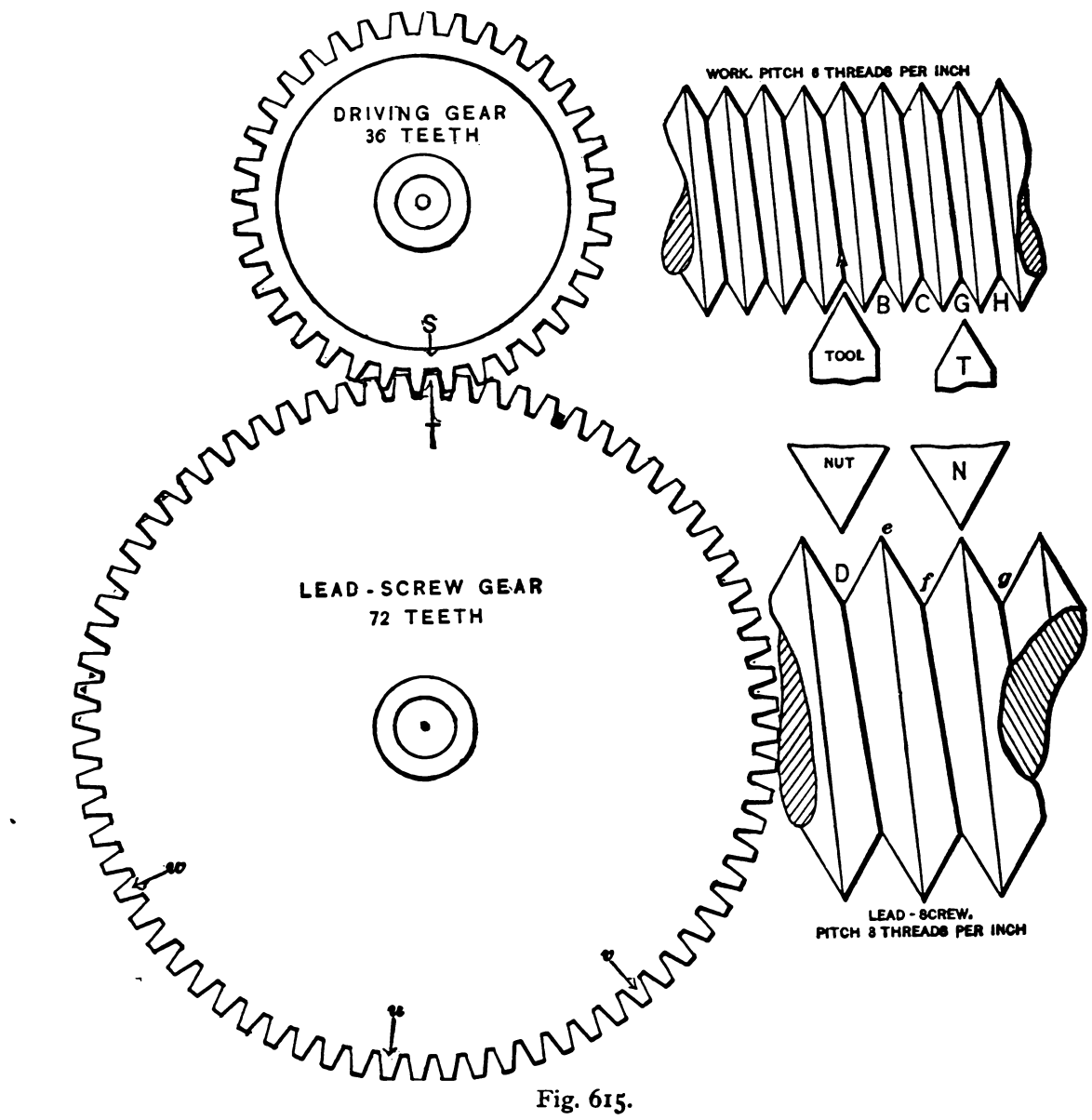

Fig. 615.

LATHE LEAD SCREWS.—Lead screws have their pitches in terms of the inch throughout all parts of the world; or, in other words, the lead screws of all lathes contain so many full threads per inch of length.

Lead screws are usually provided with square threads of the usual form, or with threads whose sides have about fifteen degrees of angle, so that the two halves of the feed nut may be let together to take up the wear. It is obvious that in a V-thread or in a thread whose sides are at an angle, the feeding strain tends to force the two halves of the feed nut apart, and therefore places a strain on the feed-nut operating mechanism that does not exist in the case of a square thread. Furthermore it can be shown that with a V-thread the opportunities to lock the carriage on a wrong place, after traversing it back by hand in screw cutting, are increased, thus augmenting the liability to cut intermediate and improper threads.

In Fig. 615, for example, we have a pitch of lead screw of three threads per inch, and the gears arranged to cut six threads per inch on the work. As the bottom wheel has twice as many teeth as the top one, it is clear that, while the top one makes one, the bottom one will make half revolution, and the lead screw will make half a turn for every turn the work makes. Now, suppose the tool point to stand opposite to space A, and the nut (supposing it to have but one thread only, which is all that is required for our purpose), stand opposite to space D. Suppose, further, that the lathe makes one revolution, and space B on the work will have moved to occupy the position occupied by space A, or, rather, there will still be a place at A fully in front of the tool, as should be the case, but the lead screw will have made half revolution, the top *e* of the thread coming opposite to the feed nut, as in the position of tool and nut shown in the figure at T and N; hence the nut would not engage, without moving the lathe carriage sideways, and thus throwing the tool to one side of the thread in the work. When, however, the work had made another revolution, both the feed screw and the work would again come into position for the tool and nut to engage properly, and it follows that in this case the tool will always fall into proper position for the nut to be locked.

It is obvious, however, that had the lead screw thread been a square one, and the nut thread to accurately fit to the lead screw thread, so as to completely fill it, then the nut could not engage

with the lead screw until the lathe had made a complete revolution, at which time the work will have made two full or complete revolutions, and the tool would, therefore, fall into proper position to follow in the groove or part of a thread cut at the first tool traverse.

In Fig. 616, we have the same lead screw geared to cut five or an odd number of threads per inch. The tool and the nut are shown in position to properly engage, but suppose, the nut being disengaged, that the work makes one revolution, and during this period the lead screw will have made $\frac{8}{5}$ths of a revolution, hence the nut will not be in position to engage properly, because, although space B will have travelled forward so as to occupy the position of space A in the figure (that is, there will be a space fairly in front of the tool point), yet the nut will not engage properly, because the nut point will not be opposite to the bottom of the lead screw thread. When the work has made its second revolution, and space C moves to the position occupied by A, the lead screw will have made $\frac{8}{5}$ or $1\frac{3}{5}$ revolutions, and the nut cannot engage properly; when the lathe has made its third revolution, the lead screw will have made $1\frac{6}{5}$ revolutions and the nut will still

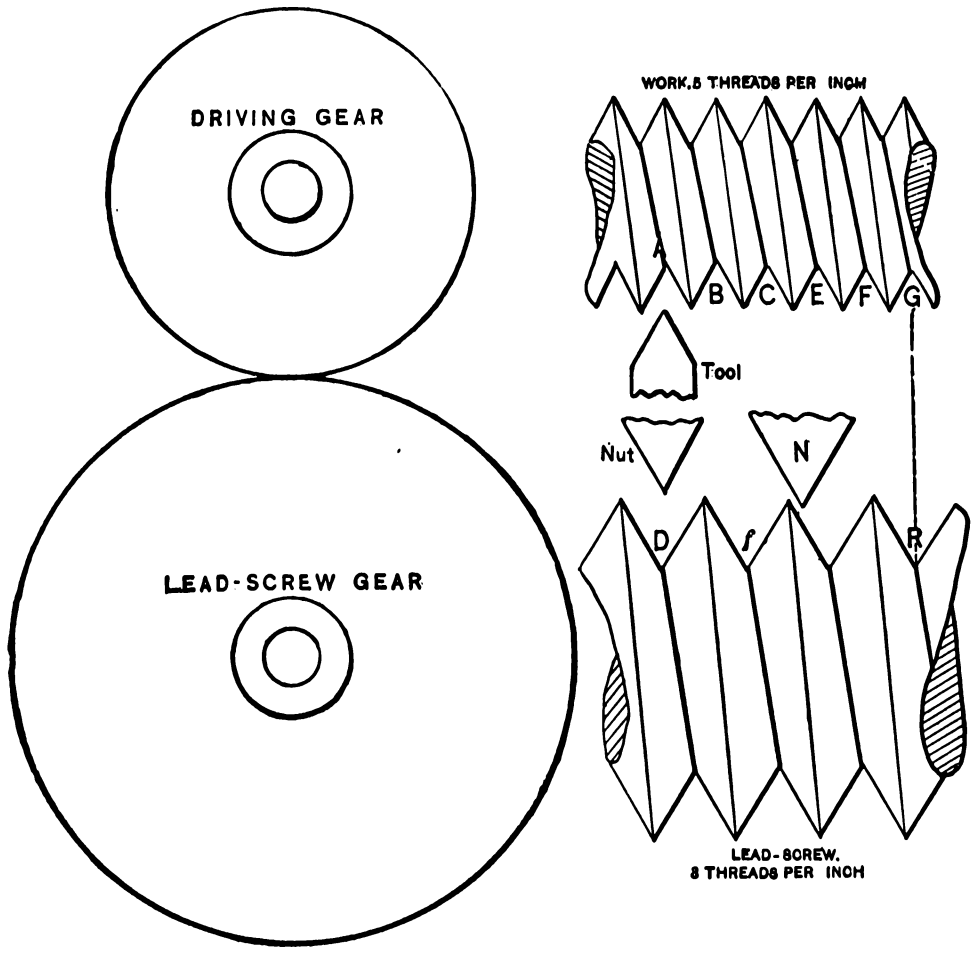

Fig. 616.

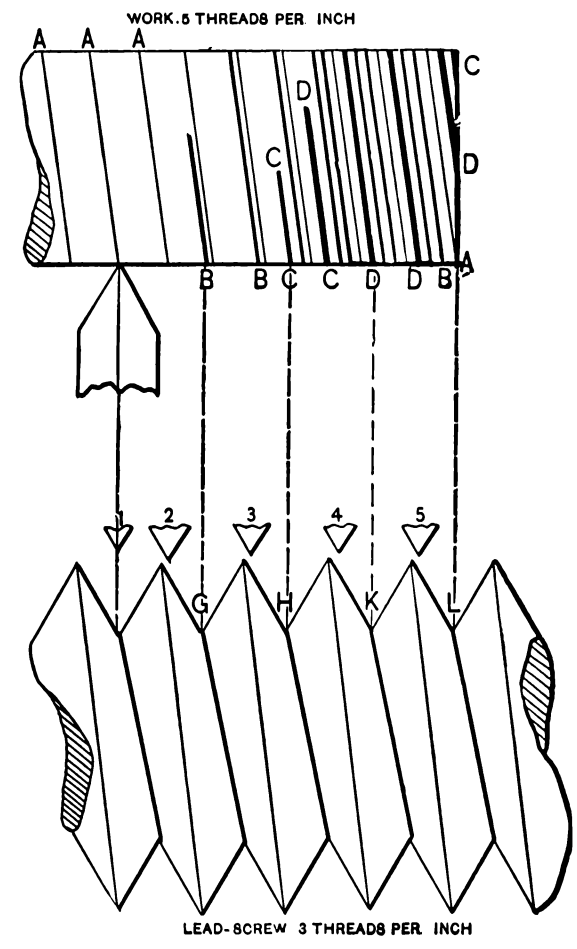

Fig. 617.

fall to one side of the thread space, and will not lock properly. The work having made its fourth turn, the lead screw will have made $2\frac{4}{5}$ turns, and the nut will not be in position to lock fairly. The work having made its fifth turn, however, the lead screw will have made three turns, and the threads will fall into the same position that they occupy in the figure, and both tool and feed nut will fall into their proper positions in their respective threads. It does not follow, however, that, the lead screw having a V-shaped thread, the nut cannot be forced to engage but once in every five turns of the lead screw, because, were this the case, it would be impossible to lock the nut in an improper position.

Suppose, for example, that we have in Fig. 617, the same piece of work and lead screw as in Fig. 616, and that a first groove, A, has been cut with the tool in the position shown, and the nut engaged in the position marked 1. Now, suppose the nut be disengaged and the work allowed to make one revolution, then the lead screw will, during this revolution, revolve $\frac{3}{5}$ of a revolution, and the position of the nut point with relation to the lead screw will be as at position 2. If, then, the nut was forced into the lead screw thread, it would, acting on the wedge principle, move the carriage to the right sufficiently to permit the nut to engage fully in thread G, and the tool would then cut a second groove on thread B. If the nut then be withdrawn from thread G, and the work allowed to make another revolution, the nut will stand in a precisely similar position with relation to the lead screw thread as it did in position 2, and by forcing it down into thread H the carriage would be again forced to the right, causing a third thread, C, to be cut. By repeating the operation of withdrawing the nut, letting the work make another revolution and then engaging the nut again, it will seat in thread K, and a fourth thread D will be cut. On again repeating the operation, however, the nut will come into position 5, and, on being drawn home into thread, or, rather, into space L, the tool will fall into groove A again. Thus there will be four threads, each having a pitch equal to that of the lead screw. The second (B) of these four will fall to the left of thread A to an amount or distance equal to $\frac{2}{5}$ of the pitch of the lead screw, because, in forcing the nut from position 2 down into the lead screw, the slide rest, and therefore the tool, will be moved to the right $\frac{2}{5}$ of the pitch of the lead screw. The third thread C will fall to the left of thread B also to an amount equal to $\frac{1}{5}$ of the pitch of the lead screw, because, in forcing the thread to seat itself into thread H from position 3, the slide rest was again moved (to that amount) to the right. The fourth thread D will fall to the left of thread C to the same amount and for the same reason.

But in this case, as before, if the lead screw had a square thread and the nut threads completely filled the spaces between the lead screw threads, then the nut could not engage at the 2nd, 3rd, or 4th work revolution, hence the false threads B, C, and D, could not have been cut, even though the feed nut was disengaged and the lathe carriage was traversed back by hand.

Now, suppose that two threads on the work measure less than the amount the lead screw advances during the time that the work makes a revolution, and if the lead screw has a V-shaped thread, the case is altered. We have, for example, in Fig. 618, a pitch of lead screw of 3 to cut 12 and 13 threads respectively. In the case of the 13 threads it will be seen that, supposing there to have been a first cut taken on the work, and the feed nut to be disengaged while the work makes a revolution, then the lead screw will revolve $\frac{3}{13}$ revolution and the point A on the lead screw will have moved up to point B, and the nut point remaining at N, seating it in the thread, would cause it to engage with the same thread that it did before, and no second thread would be cut If the nut be then released, the work allowed to make another revolution and the nut again closed, the operation would be the same as

before, and no error would be induced, and so on. Suppose, further, that after the nut was disengaged the lathe was permitted to make two revolutions, and the lead screw would make $\frac{6}{13}$, or less than half a turn, and closing it would still cause it to pass back into the same thread on the lead screw and produce correct work. But if after the nut was released the work made three turns, the lead screw would make $\frac{9}{13}$ of a turn, and the nut would fall on the right-

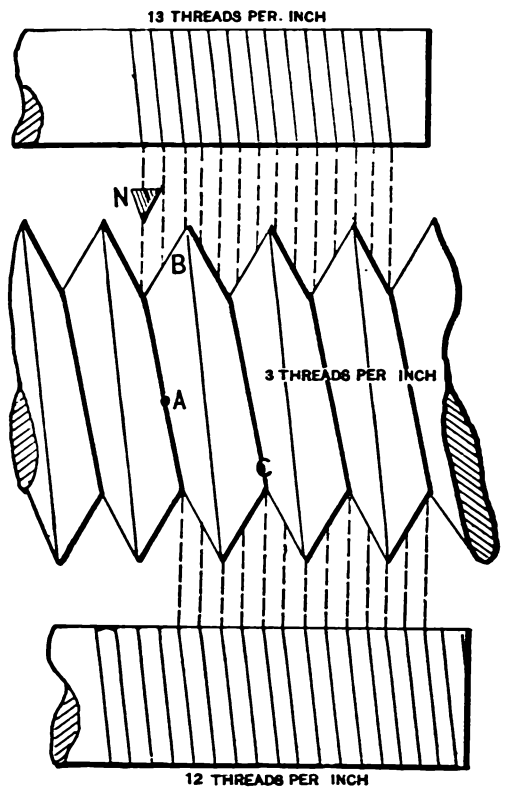

Fig. 618.

hand side of the lead screw thread, and in closing would move the lathe carriage to the right, causing the tool to cut a second thread. Now, the same operation that occurred with the first thread would during the next three trials occur with the second thread, and at the next or seventh trial a third thread would be cut, which would be again operated upon during the next succeeding three trials. At the eleventh trial a fourth thread would be cut, but on the next three trials the tool would again fall into the groove first cut and the work proceed correctly. In the case of the 12 threads, the thread cut at the first and second trials would be correct. At the third trial the nut would seat itself in the groove C of the lead screw, causing the carriage to move to the right to a distance equal to twice the pitch of thread being cut, but the tool would still fall into the same groove in the work, as it also would on the fourth. At the fifth trial the process would be repeated, and so on, so that no second thread would be cut.

It may now be noted that if we draw the lead screw and the thread to be cut as in the figure, and draw the dotted lines shown, then those that meet the bottom of the thread on the lead screw, and also meet the groove cut on the work, at the first trial, represent the cases in which the nut will fall naturally into its proper position for the tool to fall into the correct groove, while whenever the nut is being forced home it seats in a groove in the lead screw, the bottom of which groove meets a line drawn from the first thread cut; the results obtained will be made correct by reason of the movement given to the slide nut when artificially seating the nut. This is shown to be the case in Fig. 619, which represents a lead screw having an even number of threads per inch, and from which it appears that in cutting 12 threads (an even number also) the nut cannot be engaged wrong, whereas in the case of 13 threads it can be engaged right three times in 13 trials, and 10 times wrong, the latter causing the tool to cut three wrong threads.

To prevent end motion of a lead screw it should have collars on both sides of one bearing, and not one at each bearing. By this means the screw will be permitted to expand and contract under variations of atmospheric temperature, without binding against the bearing faces.

When a lead screw is long it requires to be supported, otherwise, either its weight will be supported or lifted by the feed nut in gear, or if that nut does not lift the screw, the thread cut will be finer than that due to the pitch of the lead screw, by reason of its deflection or sag.

A lead screw should preferably be as near as possible to the middle of the lathe shears, and as close to the surface as possible, so as to bring it as nearly in line with the strain on the tool as possible, but on account of the cuttings, which falling upon the screw would cause it to wear rapidly, it is usual to locate it on one side, so as to protect it from the cuttings. It is better to locate it on the front side of the lathe rather than on the back, because the strain of the cut falls mainly on the front side (especially in work of large diameter when this strain is usually greatest) and it is desirable to pull the carriage as near in a line with the resistance of the cut as possible, because the farther off the feed nut from the cutting tool point, the greater the tendency to twist the carriage on the shears.

To preserve the nut from wear, it should be made as long as convenient, as, say, five or six times the diameter of the lead screw; it is usually made, however, three or four diameters,

It is obvious that the pitch of the thread should be as accurate as possible, but it has not as yet been found practicable to produce a screw so accurate that it would not show an error, if sufficient of its length be tested, as, say, several feet.

If the error in a screw be equal, and in the same direction at all parts of its length, various devices may be employed to correct it. Thus Fig. 620 represents a device employed by the Pratt and Whitney Co.

It was first ascertained by testing the lathe that its lead screw was too short by $\frac{7}{100}$ths of a revolution in a length of 2 feet, the pitch of its thread being 6 to an inch. Now in 2 feet of the screw there would be 144 threads, and since $\frac{7}{100}$ths (the part of a revolution the thread was too short) $\times \frac{1}{6}$ (the pitch of the thread) $= \frac{7}{600}$ths (which was called $\frac{1}{85}$th), the error amounted to $\frac{1}{85}$th inch in 144 turns of the screw. The construction of the device employed to correct this error is as follows: In Fig. 620, A represents the bearing of the feed screw of the lathe, and B *b* a sleeve, a sliding fit upon A, prevented from revolving by the pin *h*, while still having liberty to move endways. C represents a casing affording

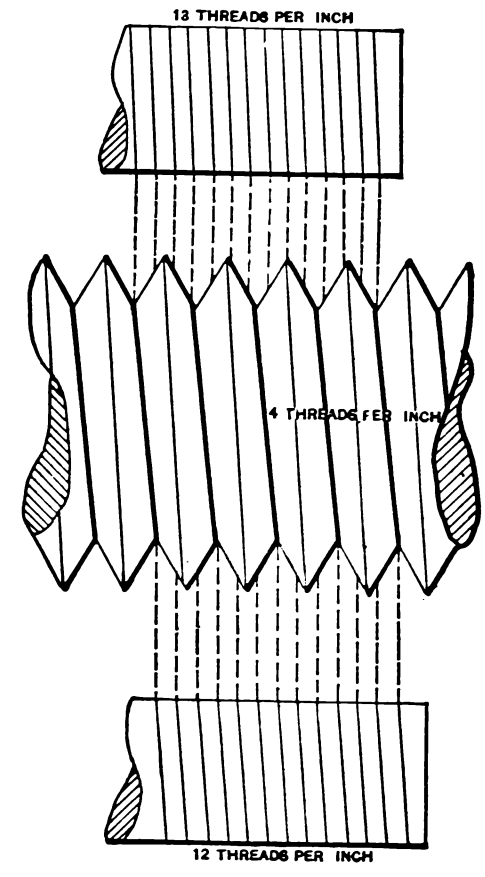

Fig. 619.

journal bearing to B *b*, having a fixed gear-wheel at its end C′, and an external thread upon a hub at that end. D is the flange of C to fasten the device to the shears of the latter, being held by screws. E represents an arm fast upon the collar of the feed screw, and carrying the pinion F, the latter being in gear with the pinion C′, and also with G, which is a pinion containing two

internal threads, one fitting to B at *b*, and the other fitting to C at *c*, the former having a pitch of 27 threads to an inch, the latter a pitch of 25 to an inch.

The operation is as follows:—The ordinary change wheels are connected to the feed screw, or lead screw, as it is sometimes termed, at J in the usual manner. The arm E being fast to the feed screw will revolve with it, and cause the pinion F to revolve around the stationary gear-wheel C'. F also gears with G. Now, F is of 12 diametrical pitch and contains 26 teeth, C' is of 12 diametrical pitch and contains 37 teeth, and G is of 12 diametrical pitch and contains 36 teeth. It follows that the pinion F, while moving around the fixed gear C', will revolve the pinion G (which acts as a nut), to an amount depending upon the difference in the number of its teeth and those of fixed gear C' (in this case as 36 is to 37), and upon the difference in the pitches of the two threads, so that at each revolution G will move the feed screw ahead of the speed imparted by the change gears, the end of the sleeve B abutting against the collar of the feed screw to move it forward.

In this case there are 36 turns of the feed screw A for one turn of the nut pinion G, the thread on sleeve B being 27, and that on the hub of C being 25 to the inch; hence, 36 turns of the feed screw gives an end motion to the sleeve B of $\frac{1}{25}$ minus $\frac{1}{27}=\frac{2}{675}$, and $\frac{1}{36}$ of that$=\frac{1}{12}\frac{1}{150}$ of an inch$=$the amount of sliding motion of the sleeve *b*, for each revolution of the lathe feed screw. By varying the proportions between the number of teeth in C' and G and the pitches of the two threads in a proper and suitable ratio, the device enables the cutting of a true thread from any untrue one in which the variation is regular.

It is usual to fasten to the side of the lathe head stock a brass plate, giving a table of threads, and the wheels that will cut them, and obviously such tables vary according to the pitch of the lead screw, but a universal table may be constructed, such as the following table (prepared by the author) that will serve for any lathe.

At the top of the table is the number of teeth in wheels, advancing by four from 12 to 80 teeth, but it may be carried as

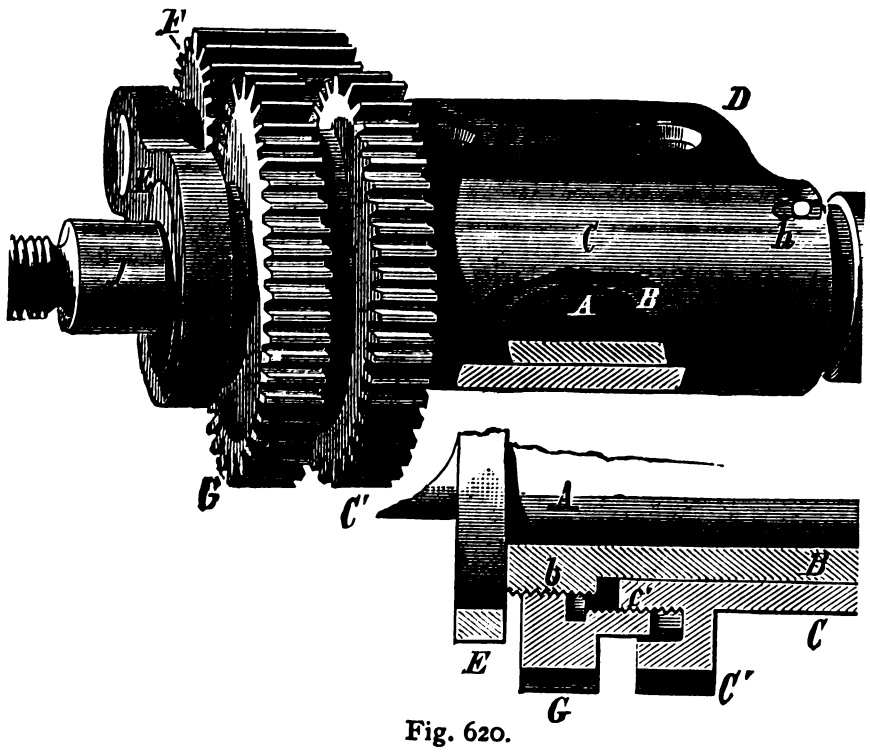

Fig. 620.

much beyond 80 as desired. On the left hand of the table is a column of the same wheels. At the bottom of the scale are pitches of lead screw from 3 up to 20 threads per inch. Over each lead screw pitch are thread pitches, thus on lead screw pitch 4 we have 20, 19, 18, and so on.

The use of the table is as follows:—

Find the pitch of the lead screw, and at the head of that column is the number of teeth for the lathe stud or mandril. Then find in that column the number of threads to be cut, and on the same line, but at the left hand, will be found the number of teeth for the lead screw.

NUMBERS OF TEETH FOR WHEEL TO GO ON LATHE SPINDLE, LATHE STUD, OR MANDRIL.

Lead Screw.	12	*16	20	24	28	32	36	40	44	48	52	56	60	64	68	72	76	80
12	3	3	3	3	3	3	3	3	3	3	3	3	3	3	3	3	3	3
16	4	4	4	4	4	4	4	4	4	4	4	4	4	4	4	4	4	4
20	5	5	5	5	5	5	5	5	5	5	5	5	5	5	5	5	5	5
24	6	6	6	6	6	6	6	6	6	6	6	6	6	6	6	6	6	6
28	7	7	7	7	7	7	7	7	7	7	7	7	7	7	7	7	7	7
32	8	8	8	8	8	8	8	8	8	8	8	8	8	8	8	8	8	8
36	9	9	9	9	9	9	9	9	9	9	9	9	9	9	9	9	9	9
40	10	10	10	10	10	10	10	10	10	10	10	10	10	10	10	10	10	10
44	11	11	11	11	11	11	11	11	11	11	11	11	11	11	11	11	11	11
48	12	12	12	12	12	12	12	12	12	12	12	12	12	12	12	12	12	12
*52	13	13	13	13	13	13	13	13	13	13	13	13	13	13	13	13	13	13
56	14	14	14	14	14	14	14	14	14	14	14	14	14	14	14	14	14	14
60	15	15	15	15	15	15	15	15	15	15	15	15	15	15	15	15	15	15
64	16	16	16	16	16	16	16	16	16	16	16	16	16	16	16	16	16	16
68	17	17	17	17	17	17	17	17	17	17	17	17	17	17	17	17	17	17
72	18	18	18	18	18	18	18	18	18	18	18	18	18	18	18	18	18	18
76	19	19	19	19	19	19	19	19	19	19	19	19	19	19	19	19	19	19
80	20	20	20	20	20	20	20	20	20	20	20	20	20	20	20	20	20	20
	Lead Screw Pitch 3.	Lead Screw Pitch 4.	Lead Screw Pitch 5.	Lead Screw Pitch 6.	Lead Screw Pitch 7.	Lead Screw Pitch 8.	Lead Screw Pitch 9.	Lead Screw Pitch 10.	Lead Screw Pitch 11.	Lead Screw Pitch 12.	Lead Screw Pitch 13.	Lead Screw Pitch 14.	Lead Screw Pitch 15.	Lead Screw Pitch 16.	Lead Screw Pitch 17.	Lead Screw Pitch 18.	Lead Screw Pitch 19.	Lead Screw Pitch 20.

EXAMPLE.—The lead screw has a pitch of 4, and I require to cut 13 threads per inch. At the head of the column is 16, and on a line with the 13 of the column, but on the left is 52, each number being marked by a * hence the 16 and 52 are the wheels; if we have not those wheels, multiply both by 2 and 32, and 104 will answer.

If the pitch of the lead screw is 2 threads per inch, the wheels must advance by 6 teeth, as indicated below:—

NUMBERS OF TEETH FOR WHEEL TO GO ON LATHE STUD, LATHE SPINDLE OR MANDRIL.

Number of Teeth for Wheel to go on Lead Screw.	Lead Screw.	12	18	24	30	36	42	48	54	60	66	72	78	84	90	96
	12	2	2	2	2	2	2	2	2	2	2	2	2	2	2	2
	18	3	3	3	3	3	3	3	3	3	3	3	3	3	3	3
	24	4	4	4	4	4	4	4	4	4	4	4	4	4	4	4
	30	5	5	5	5	5	5	5	5	5	5	5	5	5	5	5
	36	6	6	6	6	6	6	6	6	6	6	6	6	6	6	6
	42	7	7	7	7	7	7	7	7	7	7	7	7	7	7	7
	48	8	8	8	8	8	8	8	8	8	8	8	8	8	8	8
	54	9	9	9	9	9	9	9	9	9	9	9	9	9	9	9
	60	10	10	10	10	10	10	10	10	10	10	10	10	10	10	10
	Pitch of Lead Screw.	2	3	4	5	6	7	8	9	10	11	12	13	14	15	16

This table may be used for compound lathes by simply dividing the pitch of the lead screw by the ratio of the compounded pair of wheels. For example, for the wheels to cut 8 threads per inch, the pitch of lead screw being 4 and the compounded gears 2 to 1, as the ratio of the compounded pair is 2 to 1, we divide the pitch of lead screw by 2, which gives us 2, and we thus find the wheels in the column of pitch of lead screw 2, getting 12 and 48 as the required wheels, the 12 going on top of the lathe because it is at the top of the table, and the 48 on the lead screw because it is at the left-hand end of the table, and the lead screw gear is at the left-hand end of the lathe.

The table may be made for half threads as well as whole ones by

simply advancing the left-hand column by two teeth, instead of by four, thus :—

Teeth for Wheel on Lead Screw.	Teeth for Wheel on Stud.								
	12	16	20	24	28	32	36	40	44
12	3	3	3	3	3	3	3	3	3
14	3½	3½	3½	3½	3½	3½	3½	3½	3½
16	4	4	4	4	4	4	4	4	4
18	4½	4½	4½	4½	4½	4½	4½	4½	4½
20	5	5	5	5	5	5	5	5	5
22	5½	5½	5½	5½	5½	5½	5½	5½	5½
24	6	6	6	6	6	6	6	6	6
26	6½	6½	6½	6½	6½	6½	6½	6½	6½
28	7	7	7	7	7	7	7	7	7
30	7½	7½	7½	7½	7½	7½	7½	7½	7½
32	8	8	8	8	8	8	8	8	8
34	8½	8½	8½	8½	8½	8½	8½	8½	8½
36	9	9	9	9	9	9	9	9	9
38	9½	9½	9½	9½	9½	9½	9½	9½	9½
40	10	10	10	10	10	10	10	10	10
42	10½	10½	10½	10½	10½	10½	10½	10½	10½
Pitch of Lead Screw.	3	4	5	6	7	8	9	10	11

For quarter threads we advance the left-hand column by one tooth, or for thirds of threads by three teeth, and so on.

If we require to find what wheels to provide for a lathe, we take the pitch of the lead screw for the numerator, and the pitch required for the denominator, and multiply them first by 2, then by 3, then by 4, and so on, continuing until the numerator or denominator is as large as it can be to give the required proportion of teeth, and not exceed the greatest number that the largest wheel can contain.

For example : A lathe has single gear, and its lead screw pitch is 8 per inch, what wheels will cut 18, 17, 16, 15, 14, or 13 threads per inch ?

			Wheels.			
Pitch of lead screw / Pitch required	$\frac{8}{18}$	× 2 =	$\frac{16}{36}$	$\frac{24}{54}$	$\frac{32}{72}$	
Pitch of lead screw / Pitch required	$\frac{8}{17}$	"	$\frac{16}{34}$	$\frac{24}{51}$	$\frac{32}{68}$	
Pitch of lead screw / Pitch required	$\frac{8}{16}$	"	$\frac{16}{32}$	$\frac{24}{48}$	$\frac{32}{64}$	
Pitch of lead screw / Pitch required	$\frac{8}{15}$	"	$\frac{16}{30}$	$\frac{24}{45}$	$\frac{32}{60}$	
Pitch of lead screw / Pitch required	$\frac{8}{14}$	"	$\frac{16}{28}$	$\frac{24}{42}$	$\frac{32}{56}$	
Pitch of lead screw / Pitch required	$\frac{8}{13}$	"	$\frac{16}{26}$	$\frac{24}{39}$	$\frac{32}{52}$	$\frac{40}{65}$

If we suppose that the greatest number of teeth permissible in one wheel is not to exceed 100, then in this table we have all the combinations of wheels that can be used to cut the given pitches ; and having made out such a table, comprising all the pitches to be cut, we may select therefrom the least number of wheels that will cut those pitches. The whole table being made out it will be found, of course, that the numerators of the fractions are the same in each case ; that is, in this case, 16, 18, 24, 32, and so on as far as we choose to carry the multiplication of the numerator. We shall also find that the denominators diminish in a regular order : thus taking the fractions whose numerators are in each case 16, we find their denominators are, as we pass down the column, 36, 34, 32, 30, 28, and 26, respectively, thus decreasing by 2, which is the number we multiplied the left-hand column by to obtain them. Similarly in the fractions whose numerators are 24, the denominators diminish by 3, being respectively 54, 51, 48, 45, 42, and 39 ; hence the construction of such a table is a very simple matter so far as whole numbered threads are concerned, as no multiplication is necessary save for the first line representing the finest pitch to be cut.

For fractional threads, however, instead of using the pitch of the lead screw for the numerator, we must reduce it to terms of the fraction it is required to cut. For example, for 5½ threads we proceed as follows. The pitch of the lead screw is 8, and in 8 there are 16 halves, hence we use 16 instead of 8, and as in the 5½ there are 11 halves we use the fraction $\frac{16}{11}$ and multiply it first by 2, then by 3, and then by 4, and so on, obtaining as follows : $\frac{16}{11}$, $\frac{32}{22}$, $\frac{48}{33}$, $\frac{64}{44}$, obtaining as before three sets of wheels either of which will cut the required pitch. In selecting from such a table the wheels to cut any required number of pitches, the set must, in order to cut a thread of the same pitch as the lead screw, contain two wheels having the same number of teeth.

Now, suppose that the pitch of the lead screw was 6 instead of 8 threads per inch, and the table will be as follows :—

$\frac{6}{18}$	$\frac{12}{36}$	$\frac{18}{54}$	$\frac{24}{72}$
$\frac{6}{17}$	$\frac{12}{34}$	$\frac{18}{51}$	$\frac{24}{68}$
$\frac{6}{16}$	$\frac{12}{32}$	$\frac{18}{48}$	$\frac{24}{64}$
$\frac{6}{15}$	$\frac{12}{30}$	$\frac{18}{45}$	$\frac{24}{60}$
$\frac{6}{14}$	$\frac{12}{28}$	$\frac{18}{42}$	$\frac{24}{56}$
$\frac{6}{13}$	$\frac{12}{26}$	$\frac{18}{39}$	$\frac{24}{52}$

Here, again, we find that in the first vertical column the denominators decrease by two for each thread less per inch, in the second column they decrease by three, and in the third by four ; this decrease equalling the number the first fraction was multiplied by.

But suppose the lead screw pitch is an odd one, as, say, 3 threads per inch, and we construct the table as before, thus—

Pitch of lead screw	$\frac{3}{}$	$\frac{6}{}$	$\frac{9}{}$	$\frac{12}{}$	$\frac{15}{}$
Pitch to be cut	$\frac{}{18}$	$\frac{}{32}$	$\frac{}{54}$	$\frac{}{72}$	$\frac{}{90}$

Now it is useless to multiply by 2 or by 3, because they give a less number of teeth than the smallest wheel should have, hence the first multiplier should be 4, giving the following table :—

$\frac{3}{18}$	$\frac{12}{72}$	$\frac{15}{90}$	$\frac{18}{108}$
$\frac{3}{17}$	$\frac{12}{68}$	$\frac{15}{85}$	$\frac{18}{102}$
$\frac{3}{16}$	$\frac{12}{64}$	$\frac{15}{80}$	$\frac{18}{96}$
$\frac{3}{15}$	$\frac{12}{60}$	$\frac{15}{75}$	$\frac{18}{90}$

By continuing the table for other pitches we shall find that in the first vertical column the denominators diminish by 4, the second column by 5, and the third by 6 ; and it is seen that by diminishing the pitch of the lead screw, we have rendered necessary one of two things, which is, that either larger wheels containing more teeth must be used, or the change gears must be compounded.

Assuming that the pitch of the lead screw was 5 per inch. the table would be as follows :—

$\frac{5}{18}$ × 3 =	$\frac{15}{54}$	$\frac{20}{72}$	$\frac{25}{90}$
$\frac{5}{17}$ "	$\frac{15}{51}$	$\frac{20}{68}$	$\frac{25}{85}$
$\frac{5}{16}$ "	$\frac{15}{48}$	$\frac{20}{64}$	$\frac{25}{80}$

The wheels in the first column here decrease by 3, the second by 4, and the third by 5.

In nearly all lathes the advance or decrease is by 4 or by 6. In determining this rate of advance or decrease, there are several elements, among which are the following. Suppose the lathe to be geared without compounding, then the distance between the lathe spindle and the lead screw will determine what shall be the diameters of the largest and of the smallest wheel in the set, it being understood that the smallest wheel must not contain less than 12 teeth. Assume that in a given case the distance is 10 inches, and it is obvious that the pitch of the teeth at once commands consideration, because the finer the pitch the smaller the wheel that will contain 12 teeth, and the larger the wheel on the lead screw may be made. Of course the pitch must be coarse enough to give the required tooth strength.

Let it be supposed that the arc pitch is $\frac{3}{4}$-inch, then the pitch circumference of a 12-toothed wheel would be 9 inches and its radius 1·432 in.; this subtracted from the 10 leaves 8·568 in. as the radius, or 17·136 in. as the largest diameter of wheel that can be used on the lead screw, supposing there to be no intermediate gears. Now a wheel of this diameter would be capable of containing more than 75 teeth, but less than 76. But from the foregoing tables it will be seen that it should contain a number of teeth divisible either by 4 or by 6 without leaving a remainder, and what that number should be is easily determined by means of a table constructed as before explained. Thus from the tables it would be found that 72 teeth would be best for a lead screw having a pitch of either 8, 6, 5, or 3 threads per inch, and the screw-cutting capacity of the lathe would (unless compounded) be confined to such pitches as may be cut with wheels containing between 12 and 72 teeth both inclusive.

But assume that an arc pitch of $\frac{3}{8}$-inch be used for the wheel teeth, and we have as follows: A wheel of this pitch and containing 12 teeth will have a radius of $7\frac{18}{1000}$ inches, leaving 9·284 in. as the radius of the largest wheel, assuming it to gear direct with the 12-tooth pinion. With this radius it would contain 155 teeth and a fraction of a tooth; we must, therefore, take some less number, and from what has been said, it will be obvious that this lesser number should be one divisible by either 4 or 6. If made divisible by 6, the number will be 150, because that is the highest number less than 155 that is divisible by 6 without leaving a remainder. But if made divisible by 4, it may contain 152 teeth, because that number is divisible by 4 without leaving a remainder. With 150 teeth the latter could cut a thread $12\frac{1}{2}$ times as fine as the lead screw, because the largest wheel contains $12\frac{1}{2}$ times as many teeth as the smallest one; or it would cut a thread $12\frac{1}{2}$ times as coarse as the lead screw, if the largest wheel be placed on the mandril and the smallest on the lead screw. With 152 teeth the lathe would be able to cut a thread $12\frac{84}{100}$ times as fine or as coarse as the lead screw. Unless, however, the lathe be required to cut fractional pitches, it is unnecessary that the largest wheel have more teeth than divisible, without leaving a remainder, by the number of teeth in the smallest wheel, which being 12 we have 144 as the number of teeth for the largest wheel. In the United States standard pitches of thread, however, there are several pitches in fractions of an inch, hence it is desirable to have wheels that will cut these pitches.

LATHE SHEARS OR BEDS.—The forms of the shears and beds may be classified as follows.

The term shear is generally applied when the lathe is provided with legs, while the term bed is used when there are no legs; it may be noted, however, that by some workmen the two terms of *shear* and *bed* are used indiscriminately.

The forms of shears in use on common lathes are, in the United States, the raised V, the flat shear and the shear, with the edge at an angle of 90° or with parallel edges. In England and on the continent of Europe, the flat shear is almost exclusively employed.

Referring to the raised V it possesses an important advantage in that, first, the slide rest does not get loosely guided from the wear; and second, the wear is in the direction that least affects the diameter of the work.

In Fig. 621, for example, is a section of a lathe shear, with a slide rest shown in place, and it will be observed that the wear of the V upon the lathe bed, and of the V-groove in the slide rest, will cause the rest to fall in the direction of arrow A, and that a given amount of motion in that direction will have less effect in altering the diameter than it would in any other direction. This is shown on the right hand of the figure as follows: Suppose the cutting point of the tool is at *a*, and the work will be of the diameter shown by the full circle in the figure. If we suppose the tool point to drop down to *f*, the work would be turned to the diameter denoted by dotted arc *g*, while if the tool were moved outwards from *a* to *c* the work would be turned to the diameter *e*. Now since *f* and *c* are equidistant from the point *a*, therefore the difference in the diameters of *e* and *g* represents the difference of effect between the wear letting the rest merely fall, or moving it outwards, and it follows that, as already stated, the diameter of the work is less affected by a given amount of wear, when this wear is in the direction of A, than when it is in the direction of B. When the carriage is held down by a weight as is shown in Figs. 577 and 578, there is therefore no lost motion or play in the carriage, which therefore moves steadily upon the shears, unless the pressure of the cut is sufficient in amount, and also in a direction to lift the carriage (as it is in the case of boring with boring tools); but to enable the carriage to remain firm upon the shears under all conditions, it is necessary to provide means to

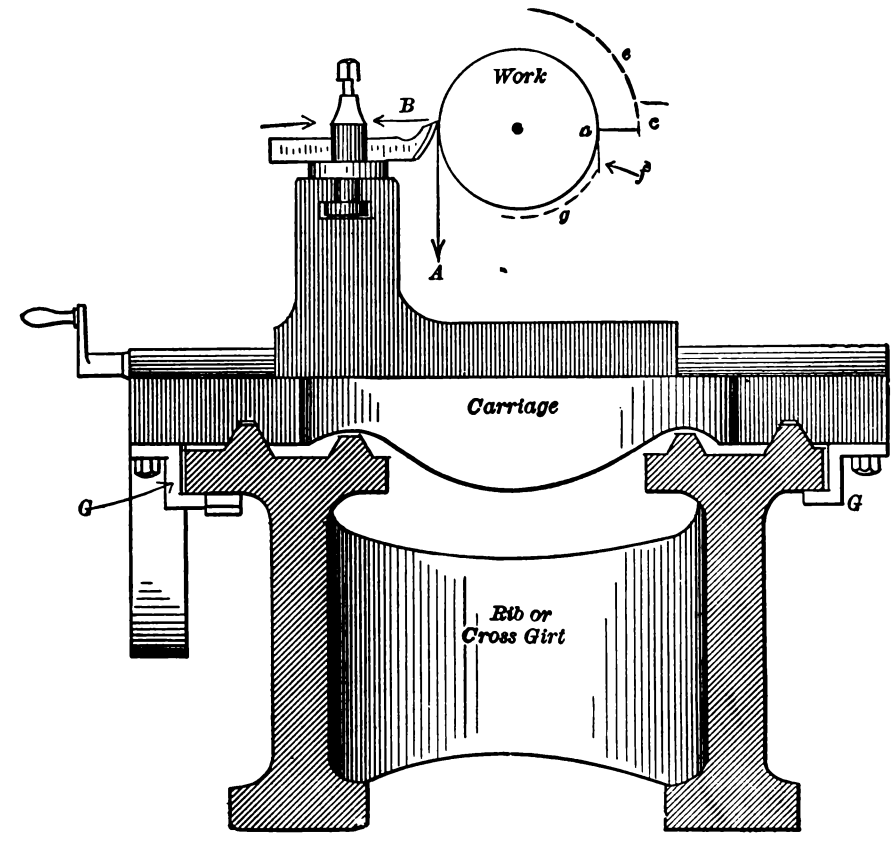

Fig. 621.

hold it down upon the Vs, which is done by means of gibs G, G, which are secured to the carriage, and fit against the bottom of the bed flange as shown.

Now since lathes are generally used much more frequently on short than on long work, therefore the carriage traverses one part of the shears more than another, and the Vs wear more at the part most traversed, and it follows that if gibs G are set to slide properly at some parts they will not be properly set at another or other parts of the length of the shears; hence the carriage will in some parts have liberty to move from the bed, there being nothing but the weight of the carriage, &c., to hold it down to the Vs. Now, the wear in the direction of A acts directly to cause this inequality of gib fit, whereas that in the direction of B does so to a less extent, as will appear hereafter.

Meantime it may be noted that when the carriage is held down by a suspended weight the shears cannot be provided with cross girts, and are therefore less rigid and more subject to torsion under the strain of the cut; furthermore the amount of the weight must be sufficient to hold the carriage down under the maximum of cut, and this weight acts continuously to wear the Vs, whether the carriage is under cutting duty or not, but the advantage of keeping the carriage firmly down upon the Vs is sufficiently great

to cause many to prefer the weighted carriage for light work driven between the lathe centres.

Fig. 622 represents the flat shear, the edges being at an angle and the fit of the carriage to the shears being adjusted by the gibs at *a a*, which are set up by bolts *c c* and *d d*. In this case there is a large amount of wearing surface at *b b*, to prevent the fall of the carriage *c*, but the amount of end motion (in the direc-

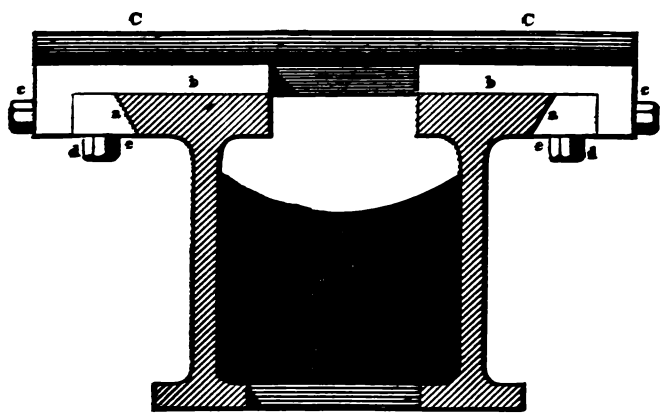

Fig. 622.

tion of B, Fig. 621), permitted to the carriage by reason of the wear of the gibs and shear edges, is greater than the amount of the wear because of the edges being at an angle. It is true that the amount of fall of the carriage on the raised V is also (on account of the angle of the V) greater than the actual amount of the wear, but the effect upon the work diameter is in this case much greater, as will be readily understood from what has already been said. The wearing surface of the raised V may obviously be

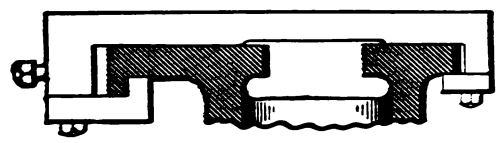

Fig. 623.

increased by providing broader Vs, or two Vs instead of having four. This would tend to keep the lathe in line, because the wear due to moving the tailblock would act upon those parts of the shear length that are less acted upon by the carriage, and since the front journal and bearing of the live spindle wear the most, the alignment of the lathe centres would be more nearly preserved.

Fig. 623 represents another form of parallel edged shears in

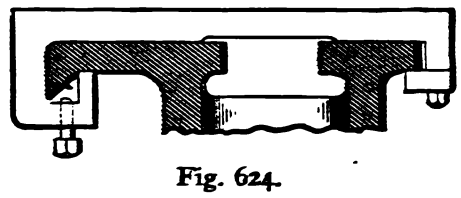

Fig. 624.

which the fit of the carriage to the shears is effected at the front end only, the other or back edge being clear of contact with the carriage, but provided with a gib to prevent the carriage from lifting. This allows for any difference in expansion and contraction between the carriage and the shears, while maintaining the fit of the carriage to the bed.

A modification of this form (both these forms being taken from "Mechanics") is shown in Fig. 624, in which the underneath

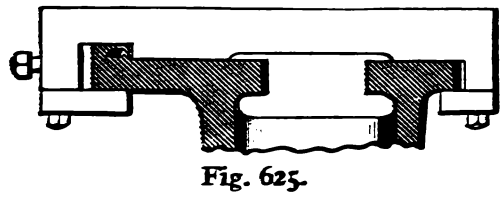

Fig. 625.

side of the front edge is beveled so that but one row of screws is required to effect the adjustment.

Fig. 625 represents a form of bed in which the fit adjustment is also made at the front end only of the bed, and there is a flange or slip at *a*, which receives the thrust outwards of the carriage; and a similar design, but with a bevelled edge, is shown in Fig. 626.

In Fig. 627 is shown a lathe shear with parallel edges, the fit being adjusted by a single gib D, set up by set-screws S. In this case the carriage will fall or move endwise, to an amount equal to whatever the amount of the wear may be, and no more, but it may be observed that in all the forms that admit of wear endways (that is to say in the direction of B in Fig. 621), the straightness of the shears is impaired in proportion as its edges are more worn at one part than at another.

A compromise between the flat and the raised V-shear is shown

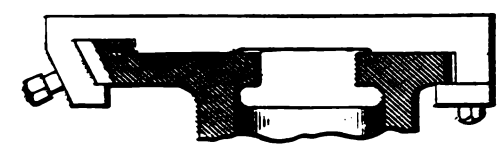

Fig. 626.

in Fig. 628, there being a V-guide on one side only, as at J. When the carriage is moved by mechanism on the front side of the lathe, and close to the V, this plan may be used, but if the feed screw or other mechanism for traversing the carriage is within the two shears, the carriage should be guided at each end, or if the operating mechanism is at the back of the lathe, the carriage should be guided at the back end, if not at both ends.

In flat shear lathes the tailstock is fitted between the inside edges of the two shears, and the alignment of the tailstock

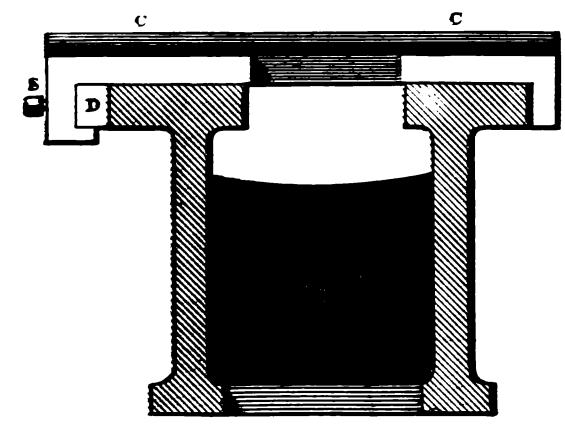

Fig. 627.

depends upon maintaining a proper fit notwithstanding the wear that will naturally take place in time. The inside edges of the shears are sometimes tapered; this taper makes it much easier to obtain a correct fit of the tailstock to the shears, but at the same time more hard to move the tailstock along the bed. To remedy this difficulty, rollers are sometimes mounted upon eccentrics having journal bearing in the tailstock, so that by operating these eccentrics one half a turn, the rollers will be brought down upon

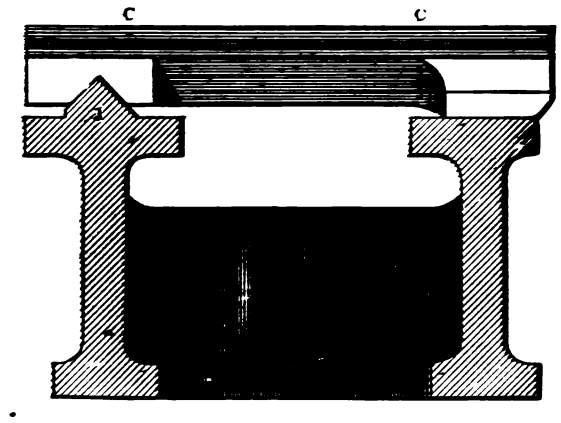

Fig. 628.

the upper face of the shears, lifting the tailstock and enabling it to be easily moved along the bed to its required position.

In many of the watchmakers' lathes the outer edges are beveled off as in Fig. 629, the bearing surfaces being on the faces *b* as well as on the edges *a*. As a result, edges *a* are relieved of weight, and therefore to some extent of wear also, and whatever wear faces *b* have helps the fit at *a a*.

In the Barnes lathe, as in several other forms in which the lathe is made (as, for example, in screw-making lathes) the form of bed in Fig. 630 is employed. The tailblock may rest on the surfaces A, A', B, C, D, and E, or as in the Barnes lathe the tailstock may

fit to angles A B, but not to E D, while the carriage fits to B E, and C D, but not to A, the intention being to equalize the wear as much as possible.

The shears of lathes require to be as rigid as possible, because

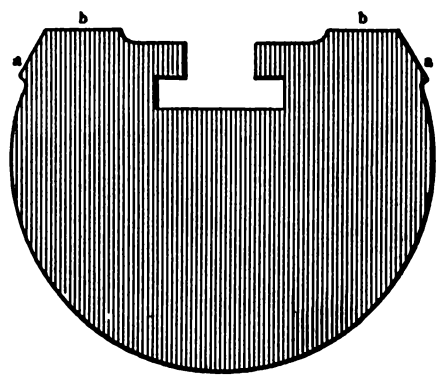

Fig. 629.

the pressure of the cut, as well as the weight of the carriage, slide rest, and tailstock, and of the work, tends to bend and twist them.

The pressure of the dead centre against the end of the work

Fig. 630.

considered individually, is in a direction to bend the lathe shears upward, but the weight of the work itself acts in an opposite direction.

The strain due to the cut falls in a direction variable with the shape of the cutting tool, but mainly in a direction towards the

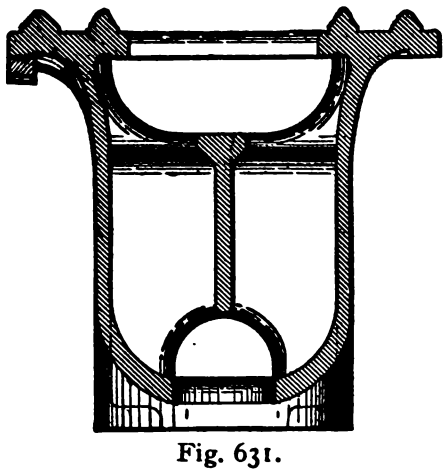

Fig. 631.

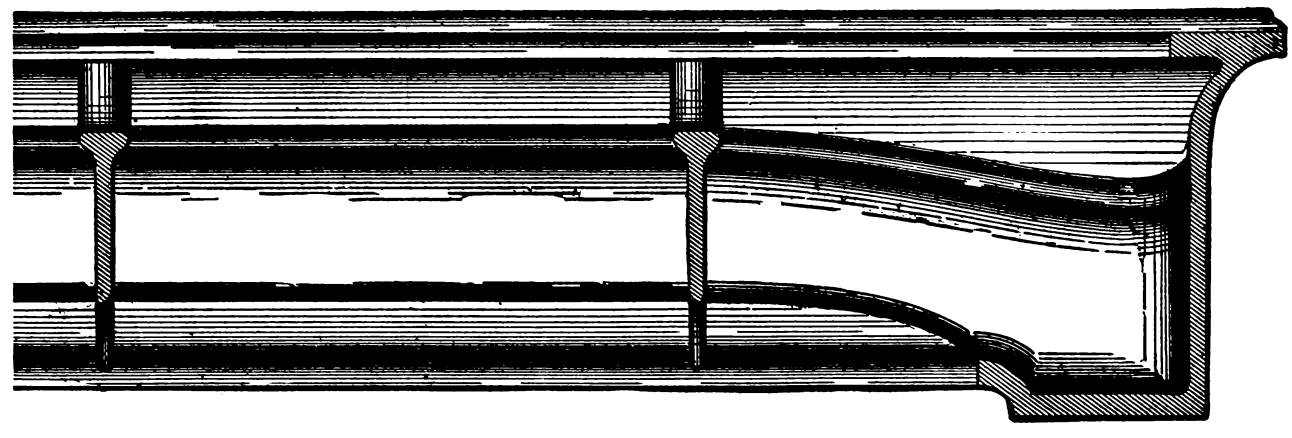

Fig. 632.

operator, and, therefore, tending to twist the shears. To resist these strains, lathe shears are usually given the I form shown in the cuts.

Figs. 631 and 632 represent the ribbing in the Putnam Tool Company's lathe; a middle rib running the entire length, which greatly stiffens it.

The legs supporting lathe shears are, in lathes of ordinary length,

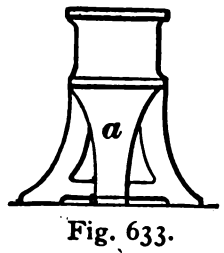

Fig. 633.

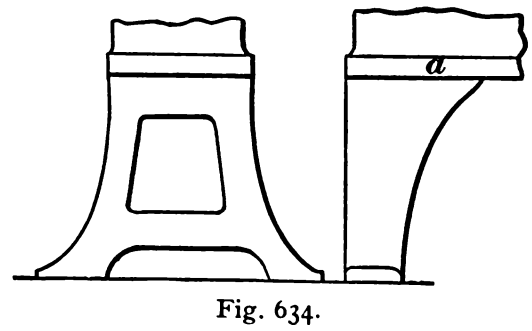

Fig. 634.

placed at each end of the bed, so that the weight of the two heads, that of the work, and that of the carriage and slide rest, as well as the downward pressure of the cut, act combined to cause it to deflect or bend. It is necessary, therefore, in long beds to provide intermediate resting or supporting points to prevent this deflection.

Professor Sweet has pointed out that a lathe shears will be more truly supported on three than on four resting points, if the foundation on which the legs rest do not remain permanently level, and in lathes designed by him has given the right-hand end of the shears a single supporting point, as shown at *a* in Fig. 633.

J. Richards in an article in "Engineering," has pointed out also that, when the lathe legs rest upon a floor that is liable from moving loads upon it to move its level, it is preferable that the legs be shaped as in Fig. 634, being narrowest at the foot, whereas when upon a permanent foundation, in which the foundation is

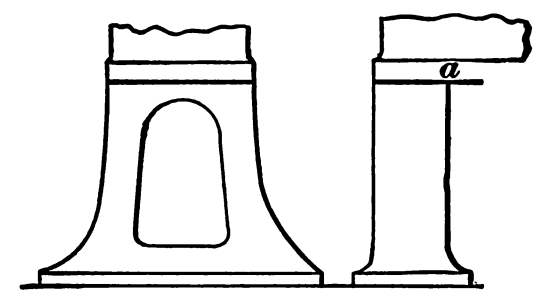

Fig. 635.

intended to impart rigidity to the legs, they should be broader at the base, as in Fig. 635.

The rack on a lathe bed should be a cut one, and not simply a cast one, because when a cutting tool is running up to a corner as against a radial face, the self-acting motion must be stopped and the tool fed into the corner by hand. As a very delicate tool movement is required to cut the corner out just square, it should be capable of easy and steady movement, but in the case of cast racks, the rest will, from defects in the rack teeth, move in little jumps, especially if the pitch of the teeth be coarse. On the other hand it is difficult to cast fine pitches of teeth perfectly, hence the racks as well as the gear teeth should be cut gear and of fine pitch.

The tailblock of a lathe should be capable of easy motion for adjustment along the shears, or bed of the lathe, and readily fixible in its adjusted position. The design should be such as to hold the axial line of its spindle true with the axial line of the live spindle. If the lathe bed has raised Vs there are usually provided two special Vs for the tailblock to slide on, the slide rest carriage sliding on two separate ones. In this case the truth of the axial line of the tail spindle depends upon the truth of the Vs.

If the lathe bed is provided with ways having a flat surface, as was shown in Fig. 622, the surfaces of the edges and of the projection are apt in time to wear, permitting an amount of play which gives room for the tailblock to move out of line. To obviate this, various methods are resorted to, an example being given in the Sellers lathe, Fig. 518.

In wood turners' lathes, where tools are often used in place of the dead centre, and in which a good deal of boring is done by such use of the tail spindle, it is not unusual to provide a device for the rapid motion of that spindle. Such a device is shown in Fig. 636; it consists of an arm A to receive the end C of the lever B, C being pivoted to A. The spindle is provided with an eye at E, the wheel W is removed and a pin passed through D and E, so that by operating the handle the spindle can be traversed in and out without any rotary motion of the screw.

When the tailblock of a lathe fits between the edges of the shears, instead of upon raised Vs, it is sometimes the practice to

give them a slight taper fitting accurately a corresponding taper on the edges of the shears. This enables the obtenance of a very

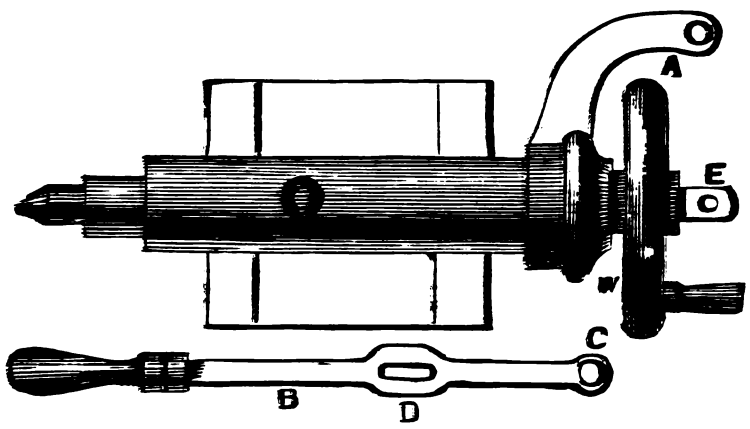

Fig. 636.

good fit between the surfaces, giving an increased area of contact, because the surfaces can be filed on their bearing marks to fit

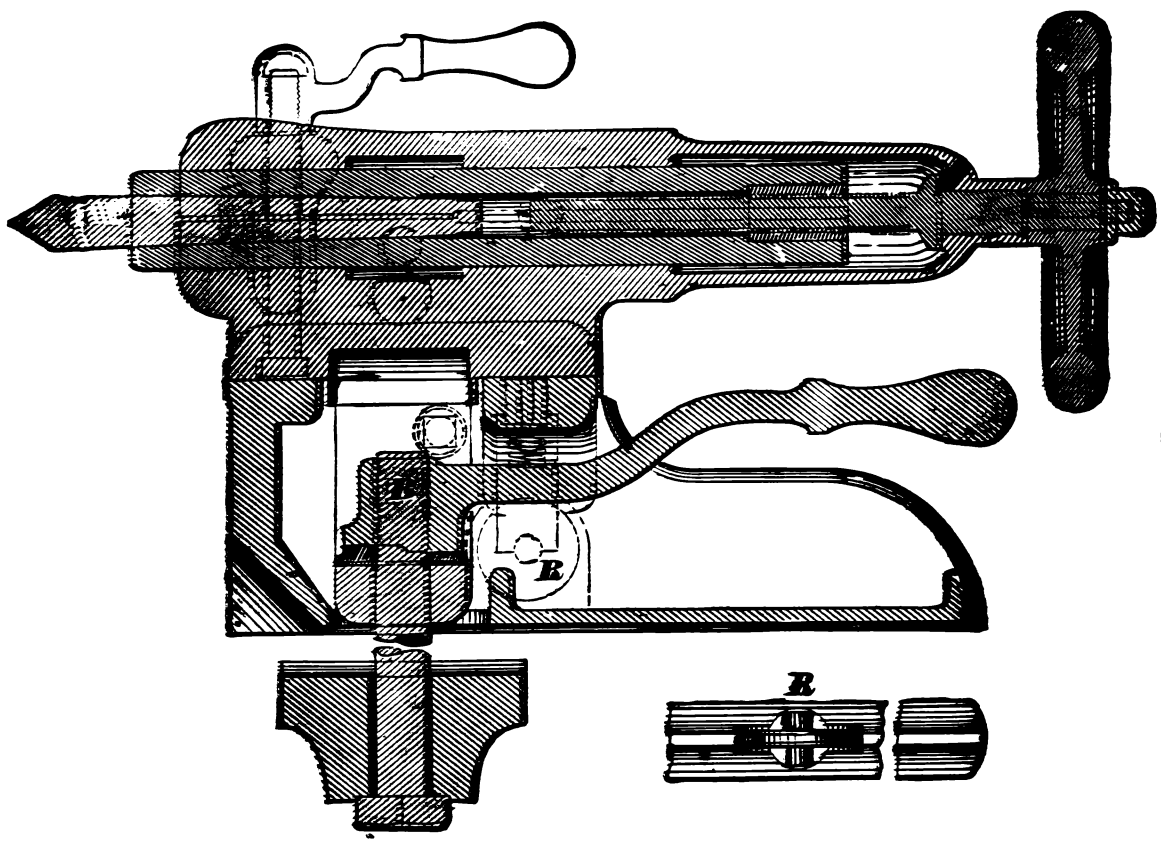

Fig. 637.

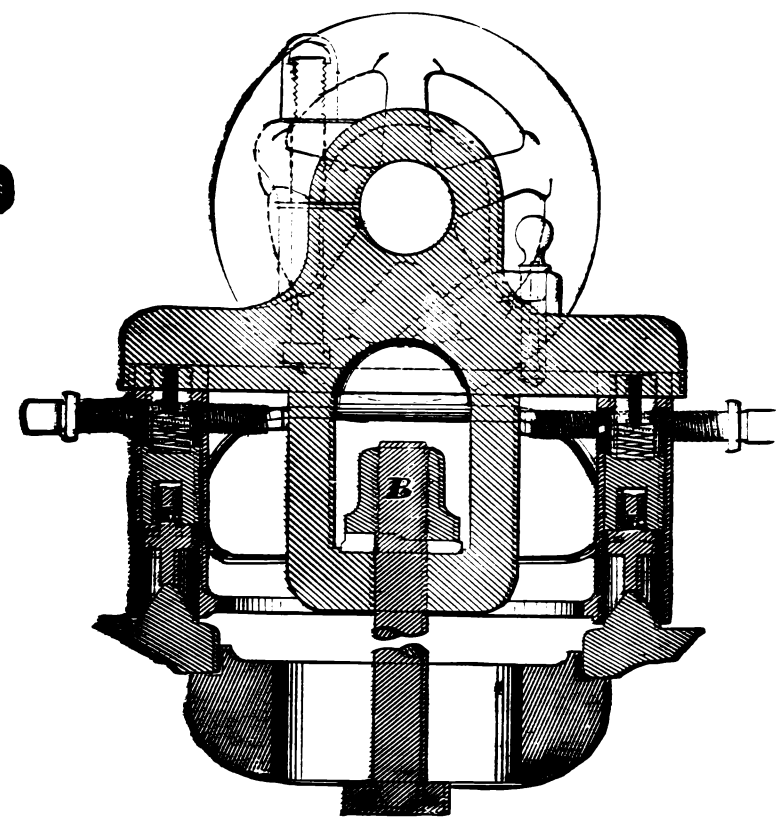

Fig. 638.

them together; but this taper is apt to cause the tailstock to fit so tightly between the shears as to render it difficult to move it along them, and in any event the friction is apt to cause the fit to be destroyed from the wear. An excellent method of obviating these difficulties is by the employment of rollers, such as shown at R in Figs. 637 and 638, which represent the tailstock of the Putnam Tool Company's lathe. In some cases such rollers are carried on eccentric shafts so that they may be operated to lift the tailstock from the bed when moving it.

A very ready method of securing or releasing a small tailstock to a lathe shears is shown applied to a wood turner's hand rest in Fig. 639, in which A A represents the lathe shears, B the hand rest, C the fastening bolt, D a piece hinged at each end and having through its centre a hole to receive the fastening bolt, and a counter-sink or recess to receive the nut and prevent it unscrewing. E represents a hinged plate, and F a lever, having a cam at its pivoted end. A slot for the fastening bolt to pass through is provided in the plate E. In this arrangement a very moderate amount of force applied to bring up the cam lever will cause the plate D to be pressed down, carrying with it the nut, and binding the tailstock or the tool rest, as the case may be, with sufficient force for a small lathe.

When a piece of work is driven between the lathe centres, the weight of the work tends to deflect or bend down the tail spindle. The pressure of the cut has also to be resisted by the tail spindle, but this pressure is variable in direction, according to the shape of the tool and the direction of the feed; usually it is laterally towards the operator and upwards. In any event, however, the spindle requires locking in its adjusted position, so as to keep it steady. The pressure on the conical point of the dead centre is in a direction to cause the tail screw to unwind, unless it be a left-hand thread, as is sometimes the case.

If the spindle and the bore in which it operates have worn, the resulting looseness affords facility for the spindle to move in the bore as the pressure of the cut varies, especially when the spindle is far out from the tailstock.

Now, in locking the tail spindle to obviate these difficulties, it is desirable that the locking device shall hold that spindle axially true with the live spindle of the lathe, notwithstanding any wear that may have taken place. The spindle is released from the pressure of the locking device whenever it is adjusted to the work, whether the cut be proceeding or not. Hence, the wear takes place on the bottom of the spindle and of the hole, wear only ensuing on the top of the spindle and bore when the spindle is operated under a slight locking pressure, while the cut is proceeding in order to take up the looseness that may have arisen from wear in the work centres.

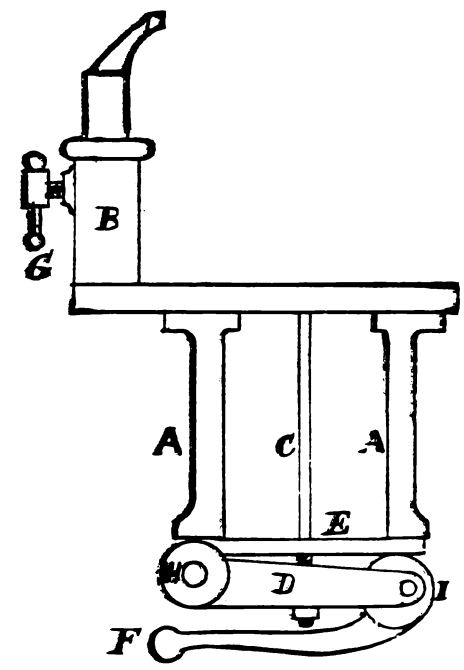

Fig. 639.

In all cases the feed of the cut should be stopped while the centre is adjusted, so as to relieve the spindle and bore from

undue wear; but most workmen pay little heed to this; hence the wear ensues, being, as already stated, mainly at the bottom. It is obvious, then, that, if the spindle is to be locked to the side of the bore on which it slides, it will be held most truly in line if it be locked to that side which has suffered least from wear, and this has been shown to be at the top.

The methods usually employed to effect this locking are as follows:—In Fig. 640, S is the tail spindle, B part of the tailblock in section, R a ring-bolt, and H a handled nut. Screwing up the nut H causes R to clamp S to the upper part of the bore of B;

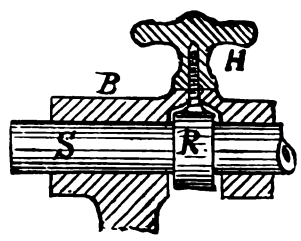

Fig. 640.

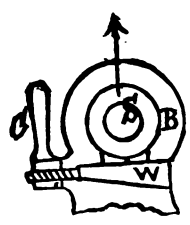

Fig. 641.

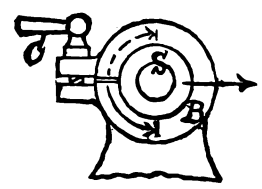

Fig. 642.

while releasing H leaves S free to slide. There are three objections to this plan. The ring R tends to spring or bend S. The weight of R tends to produce wear upon the top of the spindle, and the spindle is not gripped so near to its dead centre end as it might be. If S is a close fit in B the pressure of R could not spring or bend S; but, so soon as wear has taken place, S becomes simply suspended at R, having the pressure of R, and the weight of the work tending to bend it. Another locking device is shown in Fig. 641. It consists of a shoe placed beneath S, and a wedge-bolt beneath it, operated by the handled nut C. Here the pressure is again in a direction to lift S, as denoted by the arrow; but when the wedge W is released the shoe falls away from S, hence the locking device produces no wear upon S. This device may be placed nearer to the end of B, since the wedge may pass through the front leg of the tailstock instead of to the right of it, as in Fig. 640. But S is still suspended from the point of contact of the shoe, and the weight of the work still bends it as much as its play in B will permit.

Another clamping device is shown in Fig. 642. In this the cylindrical part B of the tailblock is split on one side, and is provided with two lugs. A handled screw passes through the upper lug, and is threaded into the lower one, so that by operating the handle C, the bore may be closed, so as to grip S, or opened to relieve it. This possesses the advantages: First, that it will cause S to be gripped most firmly at the end of B, and give a longer length of bearing of B upon S; and, secondly, that it will grip S top and bottom, and, therefore, prevent its springing from the weight of the work. But, on the other hand, B will close mainly on the side of the split, as denoted by the dotted half-circle, and therefore tend to throw S somewhat in the direction of the

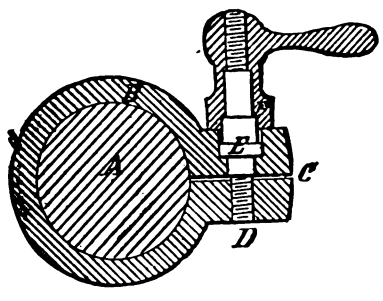

Fig. 643.

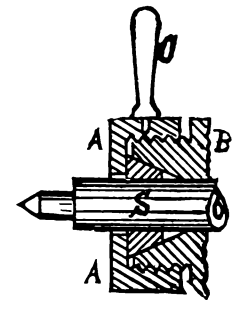

Fig. 644.

arrow, which it will do to an amount answerable to the amount of looseness of S in B. In the Pratt and Whitney lathes this device is somewhat modified, as is shown in Fig. 643. A stud E screws into the lower lug D, having a collar at E let into the upper lug, with a square extending above the upper lug so that the stud may be screwed into D, exerting sufficient pressure to close the bore of D to a neat working fit to the spindle. The handled nut, when screwed up, causes B to grip the spindle firmly; but when released, leaves the spindle a neat working fit and not loose to the amount of the play; hence, the locking device may be released, and the centre adjusted to take up the wear in the work centres while the cut is proceeding, without any movement of the spindle in B, because there is no play between the spindle and B.

In the design shown in Fig. 644, the end B of the tailblock is threaded and is provided with a handled cap nut A A. In the end of the tailblock where the spindle emerges, is provided a cone, and into this cone fits a wedge-shaped ring, as shown. This ring is split quite through on one side, while there are two other slots nearly but not quite splitting the wedge-ring. When the handle C is pulled towards the operator it screws A up on the end B, and forces the wedge-ring up in the conical bore in B. From the split the ring closes upon the spindle S, and grips it. Now, as the ring is weakened by slots in two places besides the split, it closes more nearly cylindrically true than if it had only a split, there being three points where the ring can spring when closing upon S; and from the cone being axially true with the live spindle of the lathe, S is held axially true, notwithstanding any wear of the spindle, because the locking device, being at the extreme end of B, is as near to the dead centre as it is possible to get it; and, furthermore, when C is operated for the release, the wedge-ring opens clear of S, so that S does not touch it when moved laterally. The wear of the bore of B has, therefore, no effect to throw S out of line, nor has the gripping device any tendency to bend or spring S, while the latter is held as close to the work as possible; hence the weight of the work has less influence in bending it. The pitch of the thread and the degree of cone are so proportioned that less than one-quarter rotation of A will suffice to grip or release S, the handle C being so placed on A as to be about vertical when the split ring binds S; hence C is always in a convenient position for the hand to grasp.

In this case, however, the spindle being locked at the extreme end of the hole, there is more liability of the other end moving

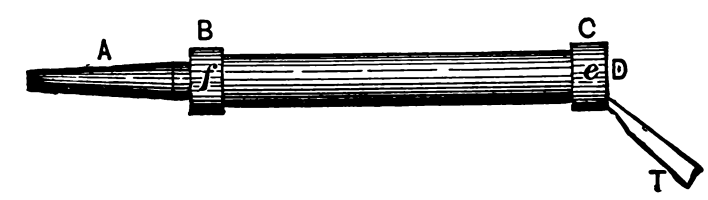

Fig. 645.

from the pressure of the cut, or from the weight of the work; hence it would seem desirable that a tail spindle should be locked in *two* places; one at the dead centre end of the hole, and the other as near the actuating wheel, or handle, as possible; and also that each device should either hold it central to the original bore, notwithstanding the wear, an end that is attained in the Sellers lathes already described.

Slide rests for self-acting or engine lathes are divided into seven kinds, termed respectively as follows: simple, or single, elevating, weighted, gibbed, compound, duplex, and duplex compound. A simple, or single, slide rest contains a carriage and one cross slide, as in Fig. 621. An elevating slide rest is one capable of elevation at one end to adjust the cutting tool height, as in Fig. 499. A weighted slide rest is one held to the shears by a weight, as in Fig. 577. A gibbed slide rest is held to the shears by gibbs, as in Fig. 621. A compound slide rest has above the cross slide a second slide carrying the tool holder, this second slide pivoting to stand at any required angle, as in Fig. 505. A duplex slide rest has two rests on the same cross slide, and in a compound duplex both these two rests are compound, as in Fig. 511. The rest shown on the Putnam lathe in Figs. 492 and 499, is thus an elevating gibbed single rest.

TESTING A LATHE.—To test a lathe to find if its live and dead spindles are axially in line one with the other and with the guides on the lathe bed, the following methods may be employed in addition to those referred to under the heading of Erecting.

To test if the live spindle is true with the bed or shear guides, a piece such as in Fig. 645 may be turned up between the lathe centres, the end A fitting into the live spindle in place of the live centre, and the collars B C being turned to an equal diameter, and the end face D squared off true. The end A must then be placed in the lathe in place of the live centre, the dead centre being removed from contact with the work; with the lathe at rest a tool point may be set to just touch collar C, and if when the carriage

is moved to feed the tool past collar B, the tool draws a line along it of equal depth to that it drew along C, the live head is true; the dead centre may then be moved up to engage the work end D, and the lathe must be revolved so that (the tool not having been moved at all by the cross-feed screw) the tool may be traversed back to draw another line along C, and if all three lines are of equal depth the lathe is true. The tool should be fine pointed and set so as to mark as fine a line as possible.

Another method is to turn up two discs, such as in Fig. 646, their stems A and B fitting in place of the live and dead centres. One of these discs is put in the place of the live, and the other in that of the dead centre, and if then the lathe tailstock be set up so that the face of B meets that of A, their coincidence will denote the truth of the live and dead spindles. The faces of the discs may be recessed to save work and to meet at their edges only, but their diameters must be equal. If the discs come one higher than the other, as in Fig. 647, the centres are of unequal height. If the faces meet at the top and are open at the bottom, as in Fig. 648, it shows that the back bearing of the live spindle is too high, or that the tail spindle is too low at the dead centre end. If the discs, when viewed from above, come as in Fig. 649, it is proof that either the live spindle or the tail spindle does not stand true with the lathe shears. If the disc faces come so nearly fair that it is difficult to see if they are in contact all around, four pieces of thin paper may be placed equidistant between them, and the grip upon them tested by pulling.

If the tailstock has been set over to turn taper and it is required to set it back to turn parallel again, place a long rod (that has been accurately centred and centre-drilled) between the lathe centres, and turn up one end for a distance of an inch or two.

Then turn it end for end in the lathe and let it run a few moments so that the work centre, running on the dead centre of

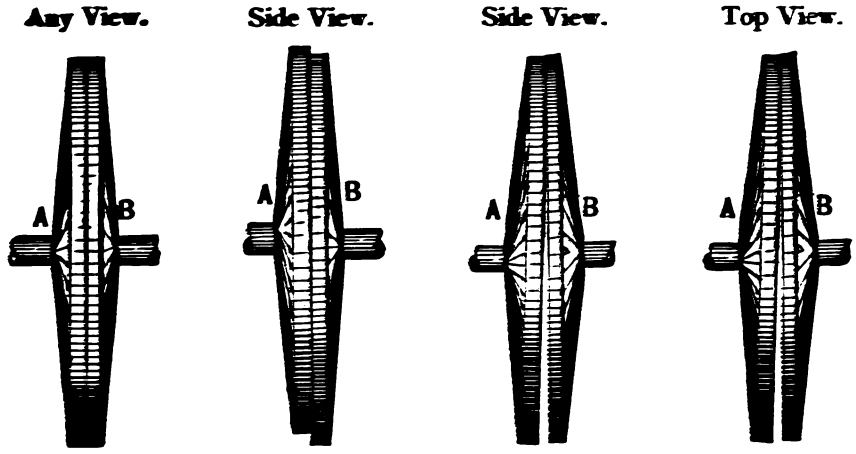

Fig. 646. Fig. 647. Fig. 648. Fig. 649.

the lathe, may wear to a proper bed or fit to the lathe centre, and then turn up a similar length at the dead centre end, taking two cuts, the last a fine finishing cut taken with a sharp tool, and feeding the finishing cut from left to right, so that it will be clear of the work end when the cut is finished. Without moving the cross-feed screw of the lathe after the finishing cut is set, take the bar out of the lathe and wind the slide rest carriage, so that the turning tool will stand close to the live centre. Place the bar of iron again in the lathe, with the turned end next to the live centre, and move the lathe carriage, so that the tool is on the turned end of the bar.

Rotate the bar by hand, and if the tool just touches the work without taking a cut the line of centres is parallel with the ways. If there is space between the tool point and the turned end of the bar, the tailstock requires setting over towards the back of the lathe, while if the tool takes a cut the tailstock requires to be set over towards the operator. If a bar is at hand that is known to be true, a pointed tool may be adjusted to just make a mark on the end of the bar when the slide rest is traversed. On the bar being reversed, the tool should leave, when traversed along the bar, a similar mark on the bar.

To test the workmanship of the back head or tailstock, place the forefinger on the spindle close to the hub whence it emerges, and observe how much the hand wheel can be moved without moving the spindle; this will show how much, if any, lost motion there is between the screw and the nut in the spindle. Next wind the back spindle about three quarters of its length out of the tailstock, take hold of the dead centre and pull it back and forth laterally, when an imperfect fit between the spindle and the hole in which it slides will be shown by the lateral motion of the dead centre. Wind the dead centre in again, and tighten and loosen the spindle clamp, and see if doing so moves the spindle in the socket.

To examine the slide rest, move the screw handles back and forth to find how much they may be moved without giving motion to the slides; this will determine the amount of lost motion between the collars of the screws and between the screws themselves and the nuts in which they operate. To try the fit of the slide rest slides, in the stationary sliding ways or Vs, remove the feed screws and move the slide so that only about one-half inch is in contact with the Vs, then move the slide back and forth laterally to see if there is any play. Move the slide to the other end of the Vs, and make a similar test, adjusting the slide to take up any play at either end. Then clean the bearing surfaces and move the slide back and forth on the Vs, and the marks will show the fit, while the power required to move the slide will show the parallelism of the Vs.

If the lathe carriage have a rack feed, operate it slowly by hand, to ascertain if it can be fed slowly and regularly by hand, which is of great importance. Then put the automatic feed in gear, and operate the feed gear back and forth, to determine how much it can be moved without moving the slide rest. To test the fit of the feed screw to the feed nut, put the latter in gear and operate the rack motion back and forth.

To determine whether the cross slide is at a right angle with the ways or shears, take a fine cut over a radial face, such, for example, as the largest face plate, and test the finished plate with a straight edge. If the face plate runs true and shows true with a straight edge, so that it is unnecessary to take a cut over it, grind a piece of steel a little rounding on its end, and fasten it in the tool post or clamp, with the rounded end next to the face plate. Let the rounded end be about $\frac{1}{4}$ in. away from the face plate, and then put the feed motion into gear, and, with the steel near the periphery of the face plate, let the carriage feed up until the rounded steel end will just grip a piece of thin paper against the face plate tight enough to cause a slight strain in pulling the paper out, then wind the tool in towards the lathe centre and try the friction of the paper there; if equal, the cross slide is true.

To find the amount of lost motion in the screw feed gear, adjust it ready to feed the saddle, and pull the lathe belt so as to revolve the cone spindle backward, until the slide rest saddle begins to move, then mark a fine line on the lathe bed making the line coincident with the end of the lathe saddle or carriage. Then revolve the cone spindle forward, and note how much the cone spindle rotates before the saddle begins to traverse.

If the lathe has an independent feed motion it may be tested in the same manner as above.

In large lathes this is of great consideration, because the work revolves very slowly, and if there is much lost motion in the feed gear, it may take considerable time after the feed is put in gear before the carriage begins to travel. Suppose, for example, a 14-foot pulley is being turned, and that the tool cuts at 15 feet per minute, it will take nearly three minutes for the work to make a revolution.

CHAPTER VIII.—SPECIAL FORMS OF THE LATHE.

THE lathe is made in many special or limited forms, to suit particular purposes, the object being to increase its efficiency for those purposes, which necessarily diminishes its capacity for general work.

In addition to this, however, there are machine tools whose construction varies considerably from the ordinary form of lathe, which nevertheless belong to the same family, and must, therefore, be classified with it, because they operate upon what is essentially lathe work. Thus boring and turning mills are essentially what may be termed horizontal lathes.

Figs. 650 to 655 inclusive, represent the American Watch Tool Company's special lathes for watch makers, which occupy a prominent position in Europe, as well as in the United States.

In lathes of this class, refinement of fit, alignment, truth, and durability of parts are of the first importance, because of the smallness of the work they perform, and the accuracy to which that work must be made. Furthermore, such lathes must be constructed to hold and release the work as rapidly as possible, because in such small work the time occupied by the tools in cutting is less, while that occupied in the insertion and removal of it is greater in comparison than in larger jobs; it often takes longer to insert and remove the work than to perform it.

These facts apply with equal force to all such parts as require the removal to or from the lathe-bed, or frequent adjustment upon the same. Thus the devices for holding and releasing the tool post or hand rest and tailblock are each so constructed that they may be set without the use of detached wrenches.

Fig. 650 represents a general view of the lathe, while Fig. 651 represents a sectional view of the headstock. The live spindle consists of two parts, an outer sleeve A A, having journal bearing in the head, and an inner hollow spindle B B, threaded at its front end *e*, to receive the chucks. The main spindle at the front end works in a journal box *c*, that is cylindrical to fit the headstock, but double coned within to afford journal bearing to the spindle A. The inner step of this double cone is relied upon mainly to adjust the diametral fit of the bearing, while the outer step is relied upon mainly to adjust the end fit of the spindle; but it is obvious in both cases there is an action securing simultaneously the diametral and the end fit. In the back bearing there are two cones. The outer one *r* is cylindrical outside where it fits into the head, and coned in its bore to receive the second cone *s*, which rotates with spindle A. The nut F is threaded upon A, so that by operating F, A is drawn within *c*, and S is simultaneously moved within *r*, so that both bearings are simultaneously adjusted. D D are *dust* rings, being ring-caps which cover the ends of the bearings and the oil holes so as to prevent the ingress of dust.

The inner spindle B has a bearing in A at the back end to steady it, and a bearing at end *e*, and is provided with the hand wheel H, by which it may be rotated to attach the chucks which screw into its mouth at *e*. To rotate or drive the chucks there is in A a feather at *g*, the chucks having a groove to receive this feather and screwing into B at E, when B is rotated.

The mouth of A is coned, as shown at *h*, and the chucks are provided with a corresponding male cone, as shown at *h* in Figs. 652 and 653, so that the chucks are supported and guided by the cone, and are therefore as close to the work as possible while having a bearing at *g*. But the cone on the chucks being split, (as is shown in Fig. 652), rotating B while holding A stationary (which may be done by means of the band pulley P), causes the chucks to move endwise in A, and if the motion is in the direction to draw the chuck within A, the cone *h* causes the chuck to close upon and grip the work. Thus in Fig. 652 is shown a step chuck. The thread at J enters the end *e* of B, in Fig. 651, which screws upon it. Cone *h* fits mouth *h* in Fig. 651, and *l* represents the splits in the chuck, which enable it to close when the cone *h* is drawn within the mouth *h* of spindle A.

The chuck is employed to hold cylindrical plates or discs, such as wheels and barrels, and the various steps are to suit the varying diameters of these parts in different sizes of watches.

Fig. 653 represents a wire chuck, having the cone at *h*, and the three splits at *l*, as before, the cone-mouth *h* closing the chuck as the latter is drawn within the spindle A.

In both the chucks thus far described, the construction has been arranged to close the splits and thus grip the circumferences of cylindrical bodies, but in Fig. 654 is shown the arrangement for enabling the chuck to expand and grip the bores of hollow work, such as rings, &c.

The outer spindle A corresponds to the outer spindle A in Fig. 651, and the inner one to spindle B in that figure. The chuck is here made in two separate parts, a sleeve V fitting in and driven by A, and a plug X fitting into a cone in the mouth of V, and screwing into the end of drawing spindle B. But while V is driven by and prevented from rotating within A by means of the feather at *g*, so likewise X is prevented from rotating within V by means of a feather *h* fast in X and fitting into a groove or featherway in V. It follows then that when B is rotated X may be traversed endways in V, to open or close the steps Y according to the direction of rotation of B.

It will now be apparent that in the case of chucks requiring to grip external diameters, the gripping jaws of the chucks will, when out of the lathe, be at their largest diameter, the splits *l* being open to their fullest, and that when by the action of the cones, they are closed to grip the work, such closure must be effected against a slight spring or resistance of the jaws, and this it is that enables and causes the chuck to open out of itself, when the enveloping cone permits it to do so.

But in the case of the opening or expanding chuck, the reverse is the case, and the chuck is at its smallest diameter (the splits *l* being at their closest) when the chuck is removed from the lathe, as is obviously necessary. In reality the action is the same in both cases, for the chuck moves to grip the work under a slight resistance, and this it is that enables it to readily release the work when moved in the necessary endwise direction.

The band pulley P is fast upon A, and is provided with an index of 60 holes on its face G, and which are adjusted for any especial work by a pin Q, so that a piece of work may have marked on it either 60, 30, 20, 15, 12, 10, 6, 5, 4, 3, or 2 equidistant lines of division, each of those numbers being divisors of 60. In marking such lines of division upon the work a sharp point may be used, supported by the face of the hand rest as a guide; or a sharp-pointed tool may be placed in the slide rest to cut a deeper line upon the work. The index plates used for cutting wheels and pinions may be placed on the rear end of A, the pawl being secured to the work-bench. The wheel H is for rotating spindle B to screw the chucks on or off the same.

Fig. 655 represents an end view from the tailstock end of the lathe; A′ is the bed having the angles *a a* to align the heads and rests. The means of holding or releasing the tailstock, on the lathe-bed, is the same as that for holding the headstock, the construction being as follows: *b* is the shoulder of a bolt through which passes the shaft *c*, with a lever *d* to operate it. This shaft is eccentric where it passes through the bolt, so that by using the lever aforesaid the bolt secures or releases the head according to the direction in which it is moved. A very small amount of motion is needed for this. The standard for the hand rest is split,

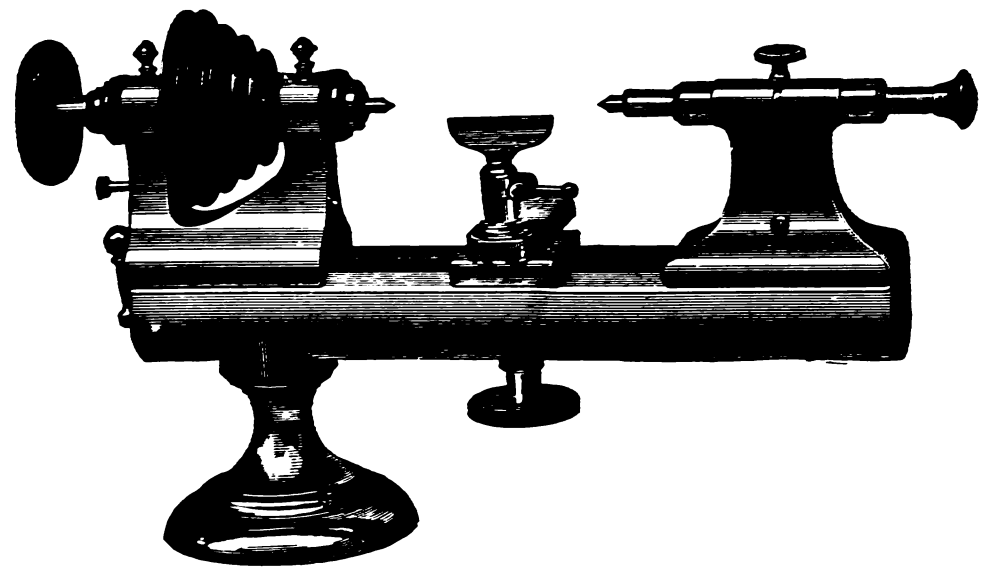

Fig. 650.

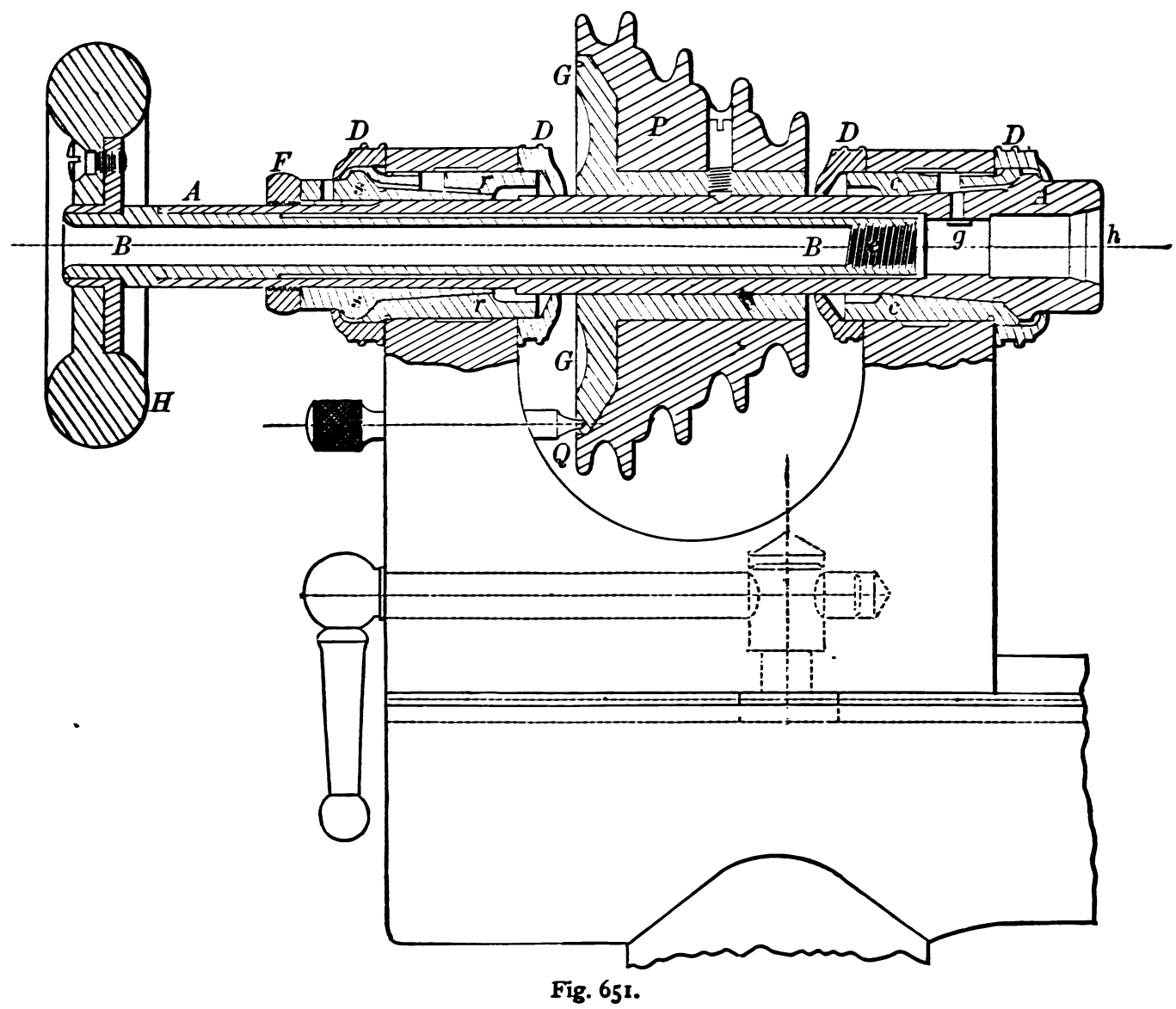

Fig. 651.

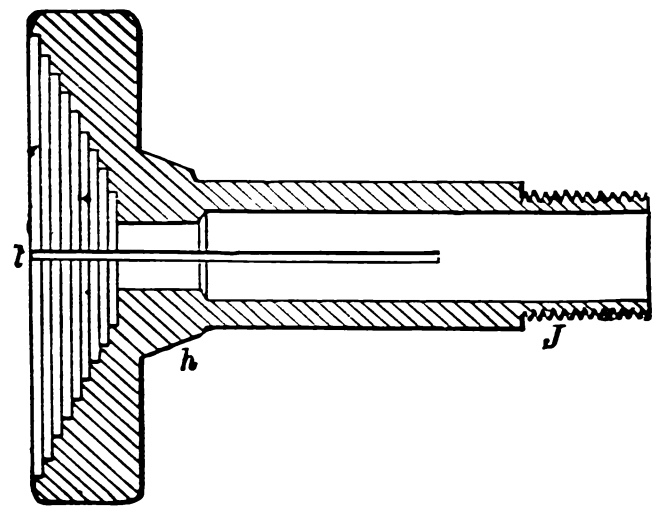

Fig. 652.

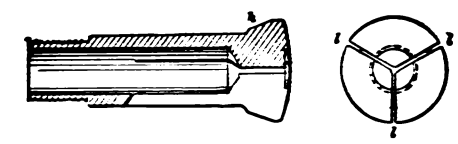

Fig. 653.

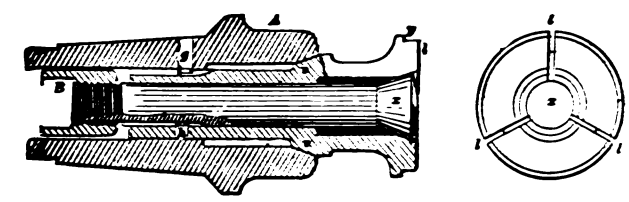

Fig. 654.

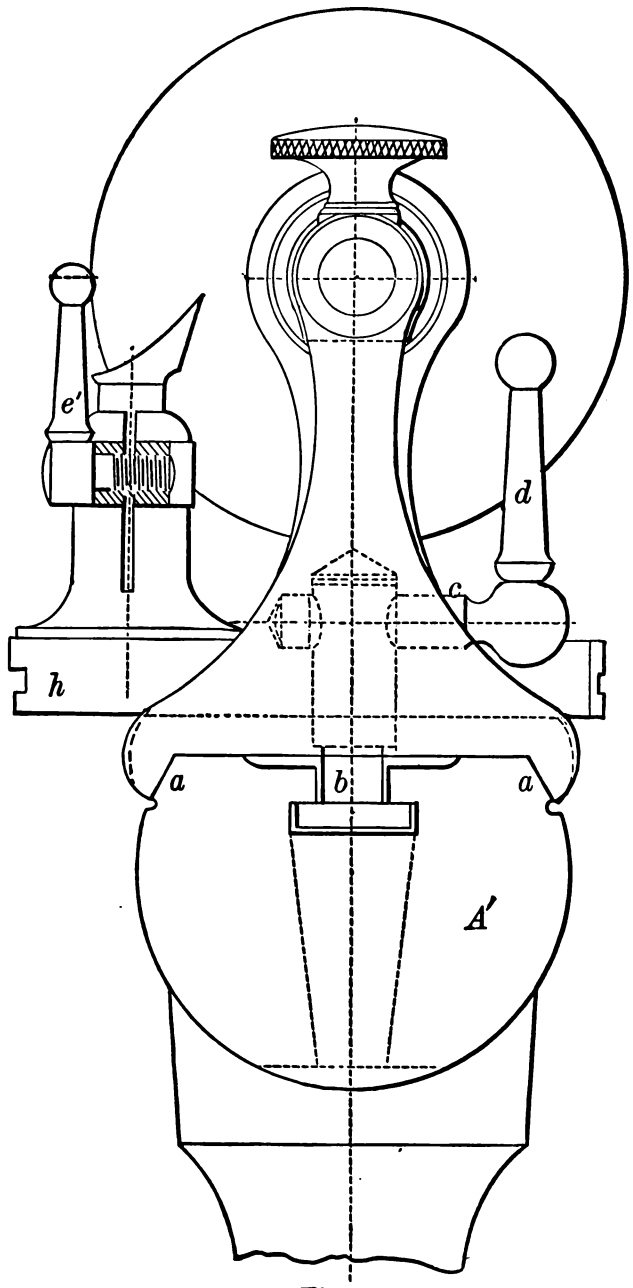

Fig. 655.

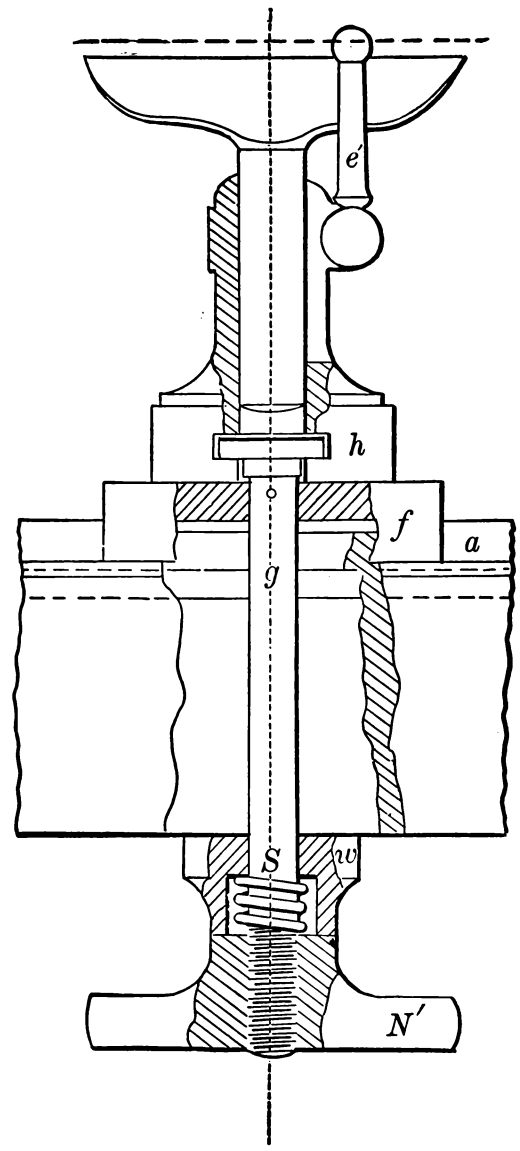

Fig. 656.

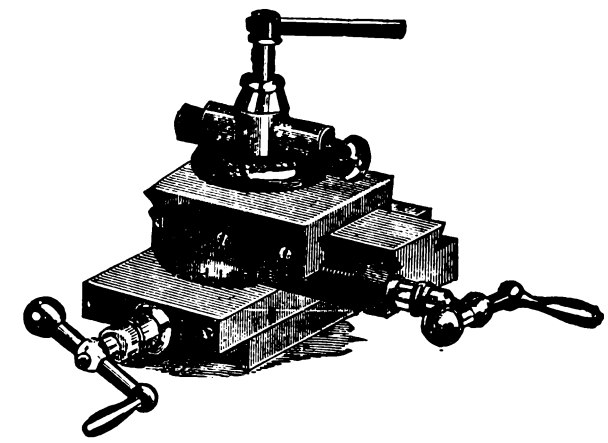

Fig. 657.

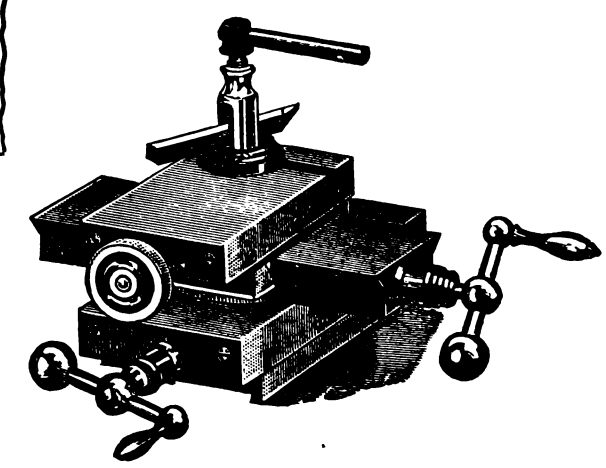

Fig. 658.

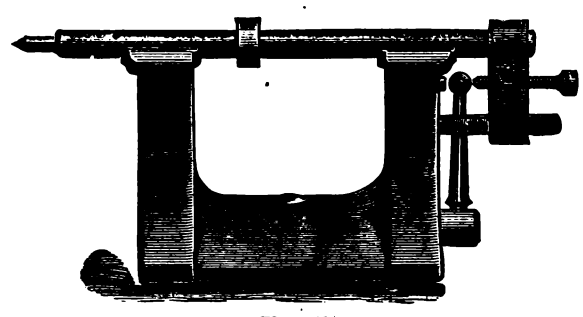

Fig. 659.

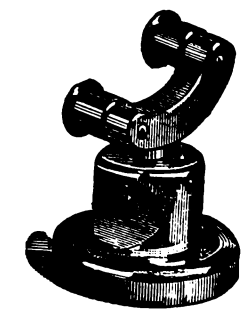

Fig. 660.

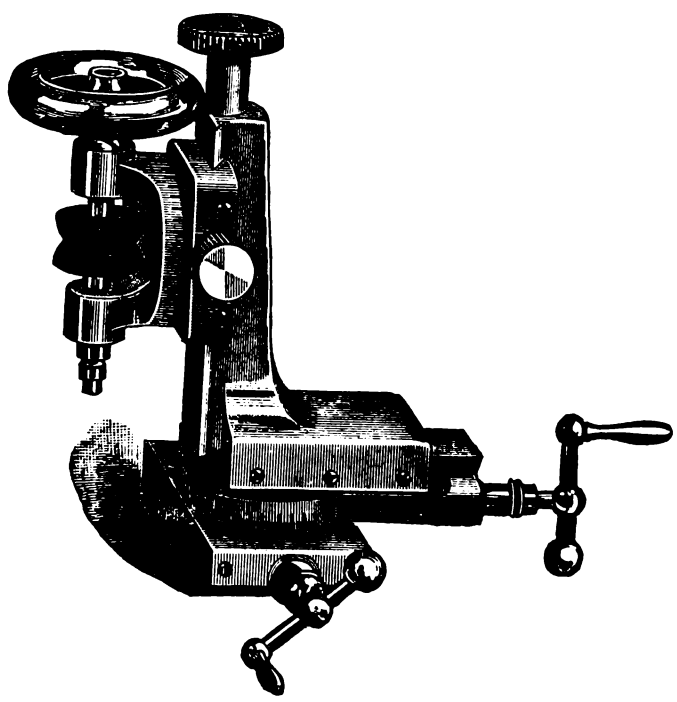

Fig. 661.

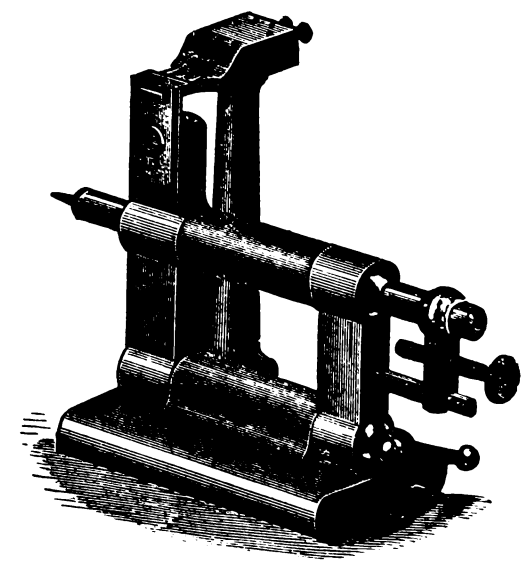

Fig. 662.

and a screw is used to tighten it in an obvious manner, the screw being operated by the handle *e'*. An end view of the rest, showing the device for securing the foot *h* to the bed, is shown in Fig. 656, *f* is a shoe spanning the bed and fitting to the bed angles *a*. Through *f* passes the bolt *g*, its head passing into the T-shaped groove *h*; N' is a hand wheel for operating bolt *g*. At S is a spiral spring, which by exerting an end pressure on washer *w* and nut N', pulls *g* and the head *h* down upon *f*, and therefore *f* down upon the bed, whether the rest be locked to the bed or not; hence when N' is released to remove or adjust the rest, neither dust nor fine cuttings can pass either between the rest and shoe or the shoe and the lathe-bed, and the abrasion that would otherwise occur is thus avoided.

Two qualities of these lathes are made: in the better quality all the working parts are hardened and afterwards ground true. In the other the parts are also ground true, but the parts (which in either case are of steel) are left soft for the sake of reducing the cost. In all, the parts are made to gauge and template, so that a new head, tailstock, or any other part in whole or in detail may be obtained from the factory, either to make additions to the lathe or to replace worn parts.

Two styles of slide rest are made with these lathes: in the first, shown in Fig. 657, the swivel for setting the top slide at an angle for taper turning is at the base of the top slide, hence the lower slide turns all radial faces at a right angle to the line of lathe centres. In the second, Fig. 658, there is a third slide added at the top, so that the bottom slide turns radial faces to a right angle with the line of lathe centres, the next slide turns the taper and the top slide may be used to turn a radial face at a right angle to the surface of the taper, and not at a right angle to the axis of the work. Both these rests are provided with tool post clamps, to hold tools made of round wire, such clamps being shown in position in figure 657.

Fig. 659 represents an additional tailstock for this lathe, the tail spindle lying in open bearings so that it can be laid in, which enables the rapid employment of several spindles holding tools for performing different duties, as drilling, counter-boring, chamfering, &c.

Fig. 660 represents a filing fixture to be attached to the bed in the same manner as the slide rest. It consists of a base supporting a link, carrying two hardened steel rolls, upon which the file may rest, the rolls rotating by friction during the file strokes, and serving to keep the file flat and fair upon the work.

Fig. 661 represents a fixture for wheel and pinion cutting; it is attached to the slide rest. When the cutter spindle is vertical the belt runs directly to it from the overhead counter shaft, but when it is horizontal the belt passes over idler pulleys, held above the lathe. The cutter spindle is carried on a frame, pivoted to the sliding piece on the vertical slide, so that it may be swivelled to set in either the vertical or horizontal position.

Fig. 662 represents a jewelers' rest for this lathe. It fits on the bed in the place of the tailstock, and is used for cutting out the seats for jewels, in plates, or settings. It is especially constructed so as to receive the jewel at the top and bore the seating to the proper diameter, without requiring any measurements or fitting by trial, and the manner in which this is accomplished is as follows:—

Fig. 663 is a side elevation, Fig. 664 an end elevation, and Fig. 665 a plan view of this rest, and similar letters of reference indicate like parts in each of the three figures. A is the base, held to the lathe bed by the bolt B, whose operation is the same as that already described for the head and tailstocks.

In one piece with A is the arm C, carrying at its head three gauge tongues or pieces D E F, which are adjustable by means of the screws *d e f*, which move the gauge tongues horizontally. Through a suitable guide I is a standard or head; pivoted to A at J J, and carrying at its top three gauge tongues K L M.

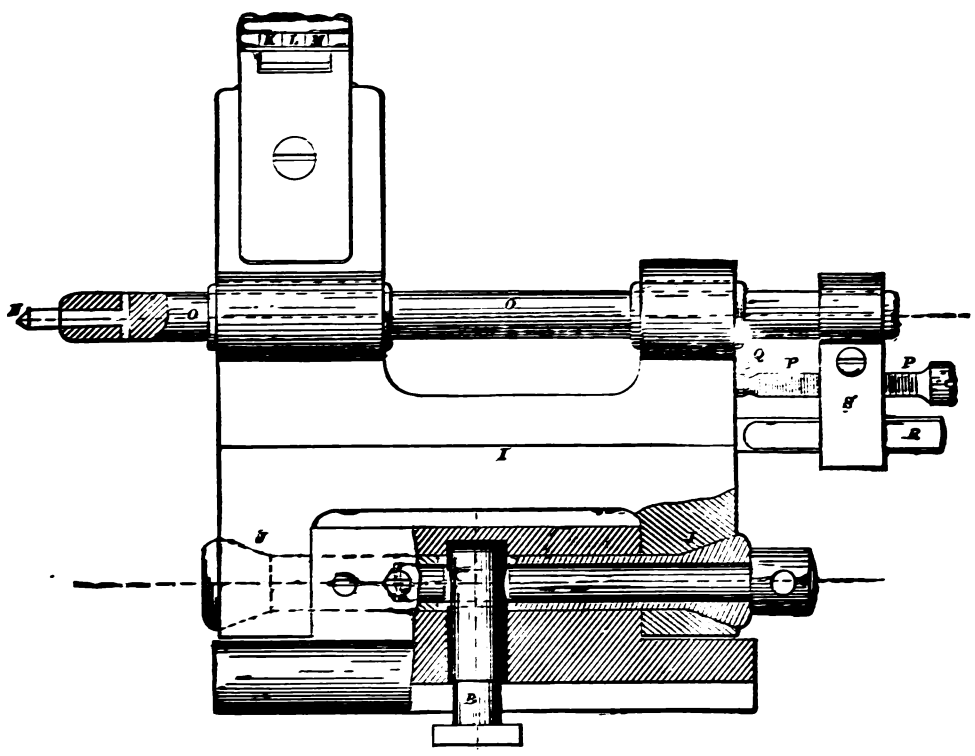

Fig. 663.

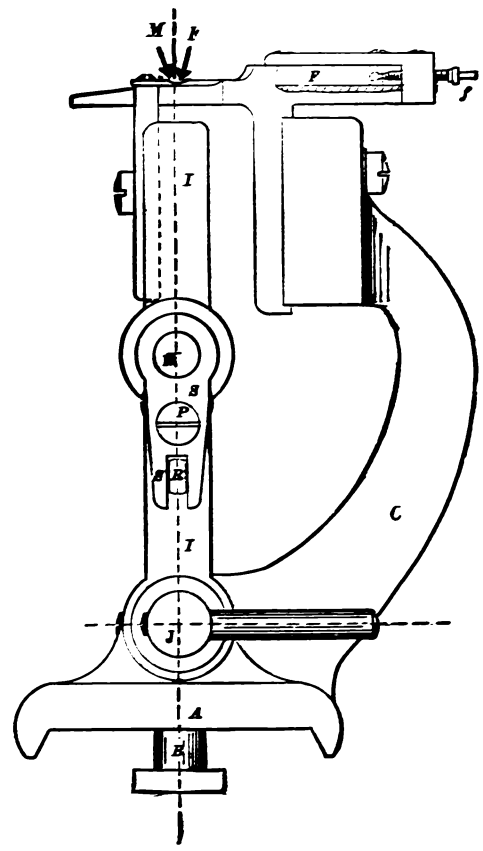

Fig. 664.

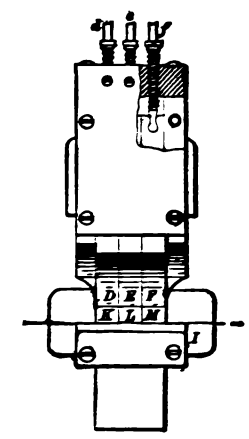

Fig. 665.

Midway between pivots J J and the ends of the gauge tongues, is the centre or tool carrying spindle O. If a piece of work, as a jewel, be placed between the tongues F and M, Fig. 664 [swinging M, and with it I (which is pivoted at J), laterally], then the point of the centre N will be thrown out of line with the lathe live spindle half the diameter of the jewel, because from J to the centre N, of O, is exactly one half of the vertical distance from J to the jewel. If then a tool be placed in the dead centre and its cutting edge is in line with the axis of spindle O, it will bore a hole that will just fit the jewel. Hence placing the jewel between the two tongues sets the diameter to which the tool will bore and determines that it shall equal the diameter of the jewel.

The object of having three pair of gauge tongues is to enable the obtaining of three degrees of fit; thus with a piece placed between D K the hole may be bored to fit the piece easily, with it placed between E L the fit may be made barely movable, while with it placed between F M the fit may be too tight to be a movable one save by pressure or driving, each degree of fit being adjusted by means of the screws *e f g*.

The tool is fed by moving spindle O by hand, the screw P being adjusted so that its end abuts against stop Q, when the hole is bored to the requisite depth; R is simply a guide for the piece S, which being attached to O, prevents it from rotating.

In watch manufactories special chucks and appliances are necessary to meet their particular requirements. There is found to exist, for example, in different rods of wire of the same nominal diameter, a slight variation in the actual diameter, and it is obvious that with the smaller diameters of wire the split chucks will pass farther within the mouth *h* of A, Fig. 651, because the splits of the chucks will close to a greater extent, and the cones on the chucks therefore become reduced in diameter.

If then it be required to turn a number of pieces of work to an exact end measurement, or a number of flanges or wheels to equal

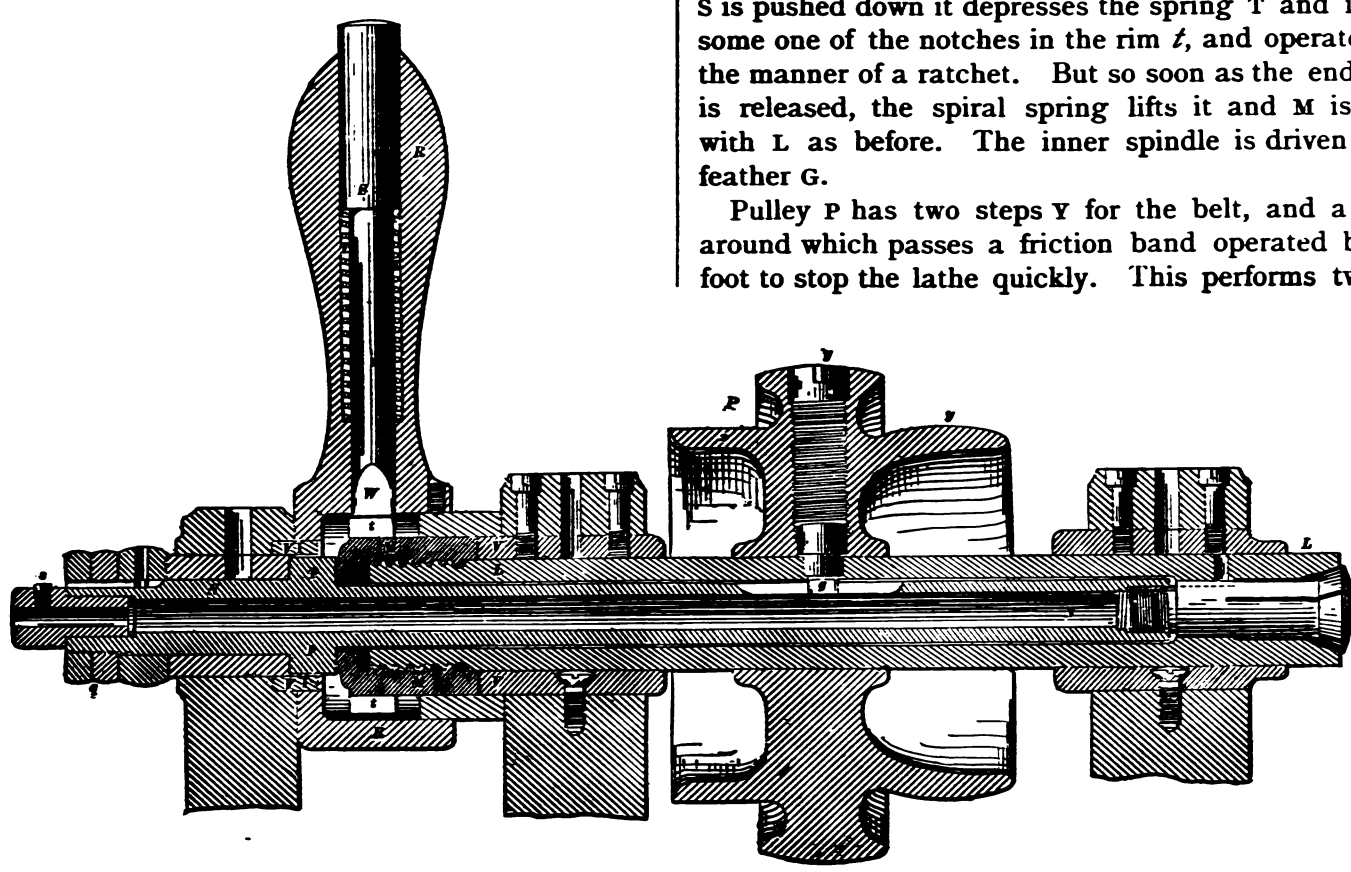

Fig. 666.

thicknesses, without adjusting the depth of cut for each it becomes necessary to insure that the successive pieces of work shall enter the chucks to an equal distance, notwithstanding any slight variation in the work diameter at the place or part where it is gripped by the chuck.

To accomplish this end what is termed a sliding-spindle head is employed. In this the *outer spindle* has the end motion necessary to open and close the chuck, the chuck having no end motion.

The construction of this sliding-spindle head is shown in Fig. 666, in which a wire chuck is shown in position in the spindles ; L is the live spindle passing through parallel bearings, so that it may have end motion when the nut M is operated. The inner spindle N to which the chucks are screwed is prevented from having end motion by means of the collar *p* and nut *q* at the rear bearing. When nut M is rotated and N is held stationary by means of the pulley P, L slides endways, and the chuck opens or closes according to the direction in which the nut moves the spindle L.

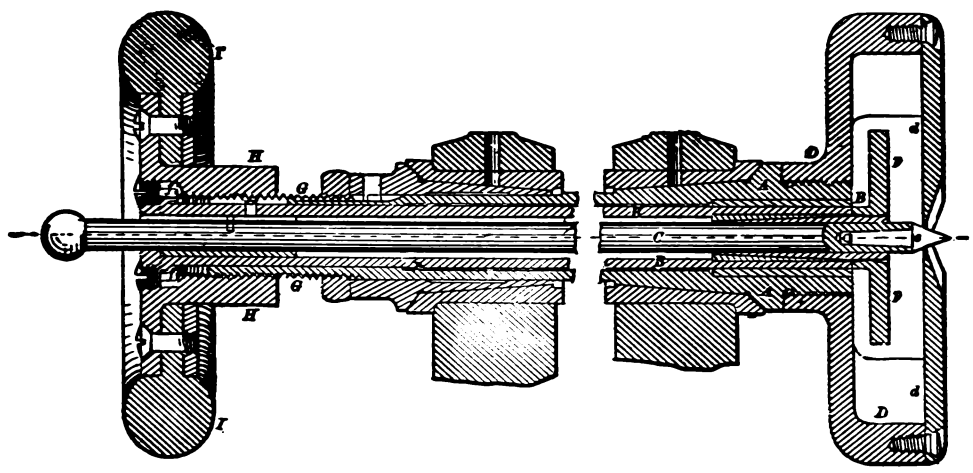

Fig. 667.

To regulate the exact distance to which the work shall be placed within the chuck, a piece of wire rod may be placed within the hollow spindle N being detained in its adjusted position by the set screw S.

The construction whereby the nut is permitted to revolve with spindle L, and be operated by hand to move spindle L when the lathe is at rest, is as follows.

The cylindrical rim *t* of the nut is provided with a series of notches arranged around its circumference. R is a lever whose hub envelops nut M, but has journal bearing on V. R receives the pin S, which rests upon a spiral spring T. When, therefore, S is pushed down it depresses the spring T and its end W enters some one of the notches in the rim *t*, and operates the nut after the manner of a ratchet. But so soon as the end pressure on R is released, the spiral spring lifts it and M is free to revolve with L as before. The inner spindle is driven by means of the feather G.

Pulley P has two steps Y for the belt, and a friction step *z*, around which passes a friction band operated by the operator's foot to stop the lathe quickly. This performs two functions, as follows. The thread of M is a left-hand one so that the inertia of the nut will not, when the lathe is started, operate to screw the nut back, and release the chuck jaws from the work, by moving spindle L endwise. Per contra, however, in stopping the lathe suddenly by means of the brake, there is a tendency of nut M to stop less quickly than spindle L, and this operates to unscrew nut N and release the work. To assist this R is sometimes in lathes for watch manufactories provided with a hand wheel whose weight is made sufficient for the purpose.

Figs. 667 and 668 represent a pump centre head for watch manufactories, being a device for so chucking a piece of work that a hole may be chucked true and enlarged or otherwise operated upon, with the assurance that the work will be chucked true with the hole. Suppose two discs be secured together at their edges, their centres being a certain distance apart, as, for example, a top and bottom plate of a watch movement, and that the holes of one plate require to be transferred to the other, then by means of this head they may be transferred with the assurance that they shall be axially in line one with the other, and at a right

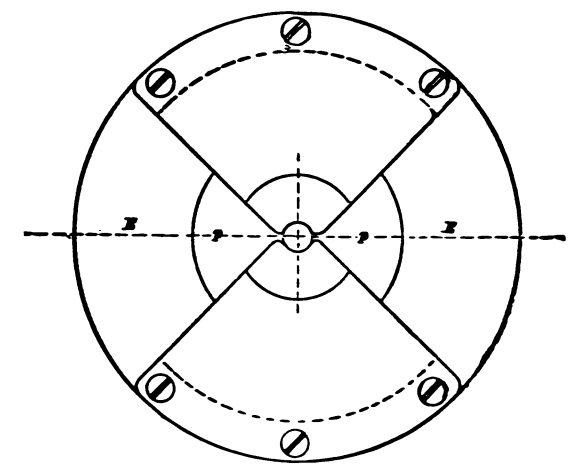

Fig. 668.

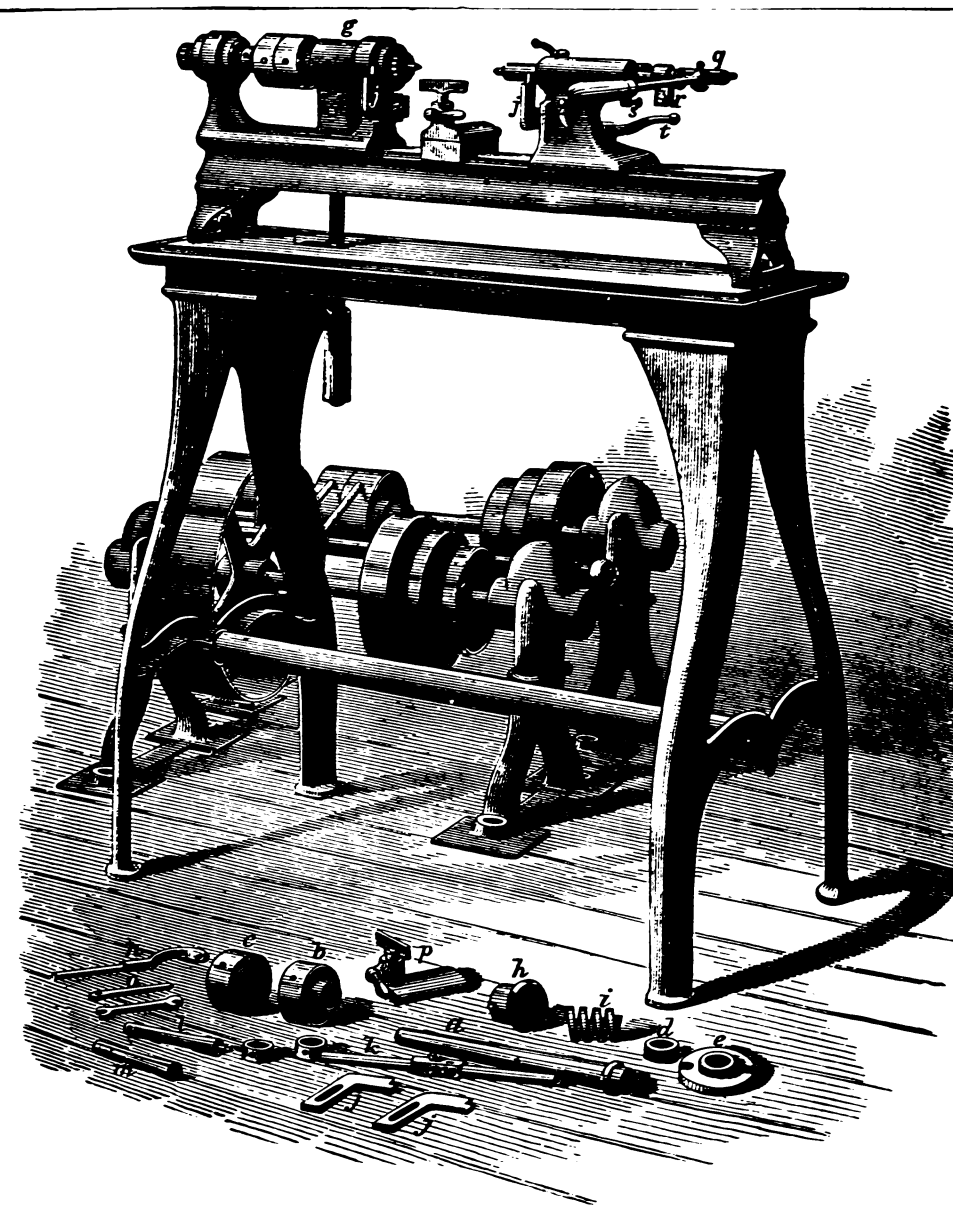

Fig. 669.

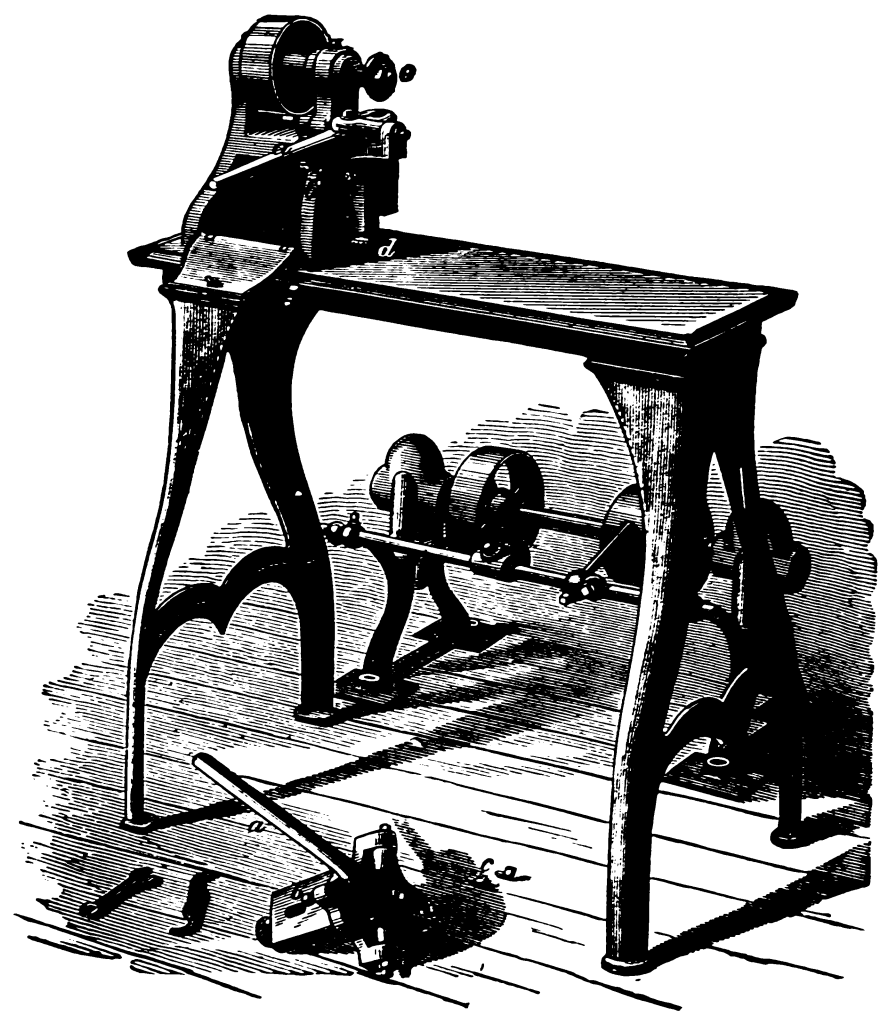

Fig. 670.

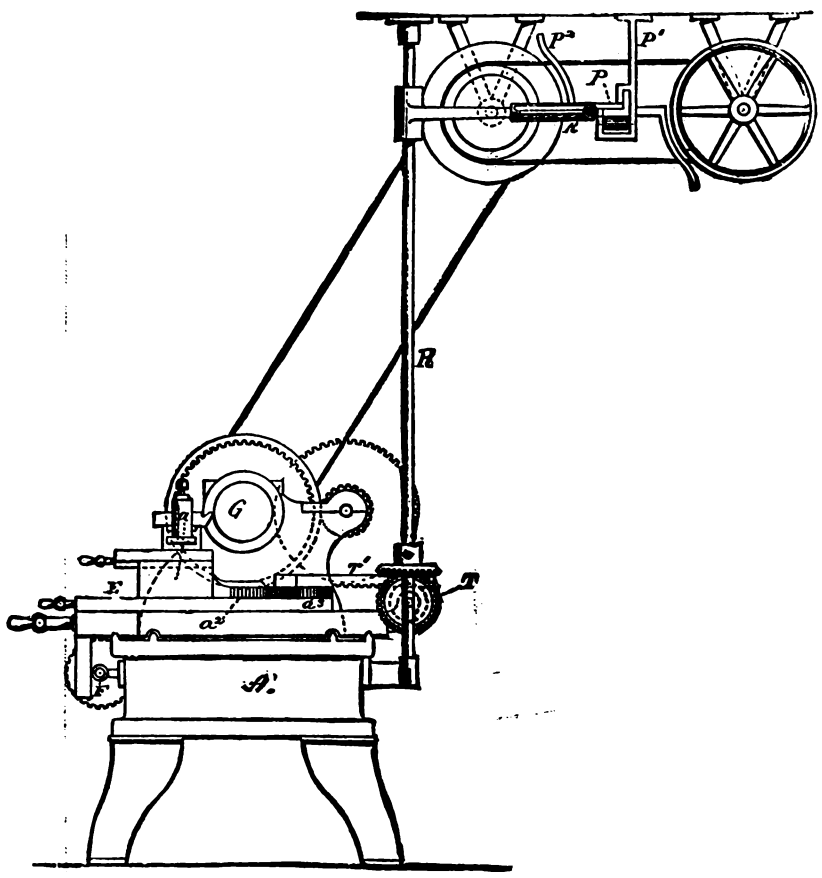

Fig. 671.

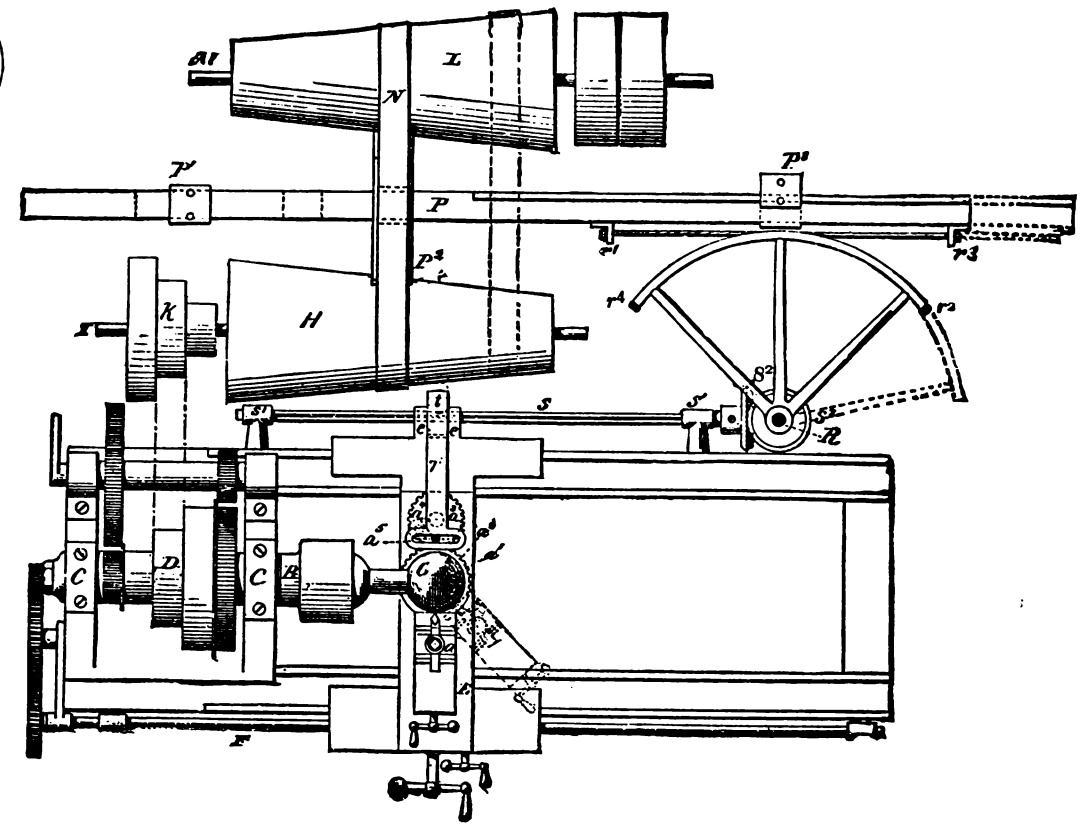

Fig. 672.

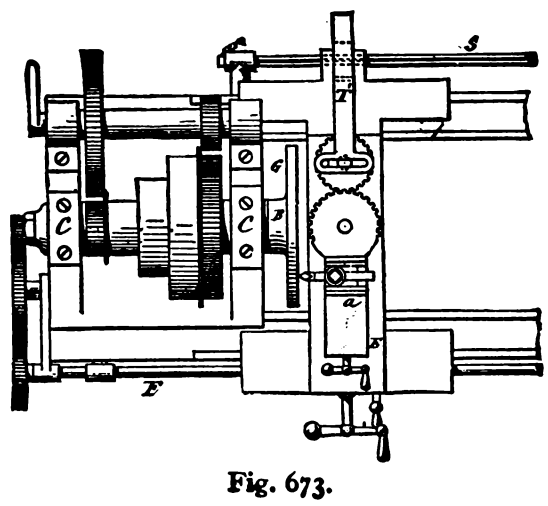

Fig. 673.

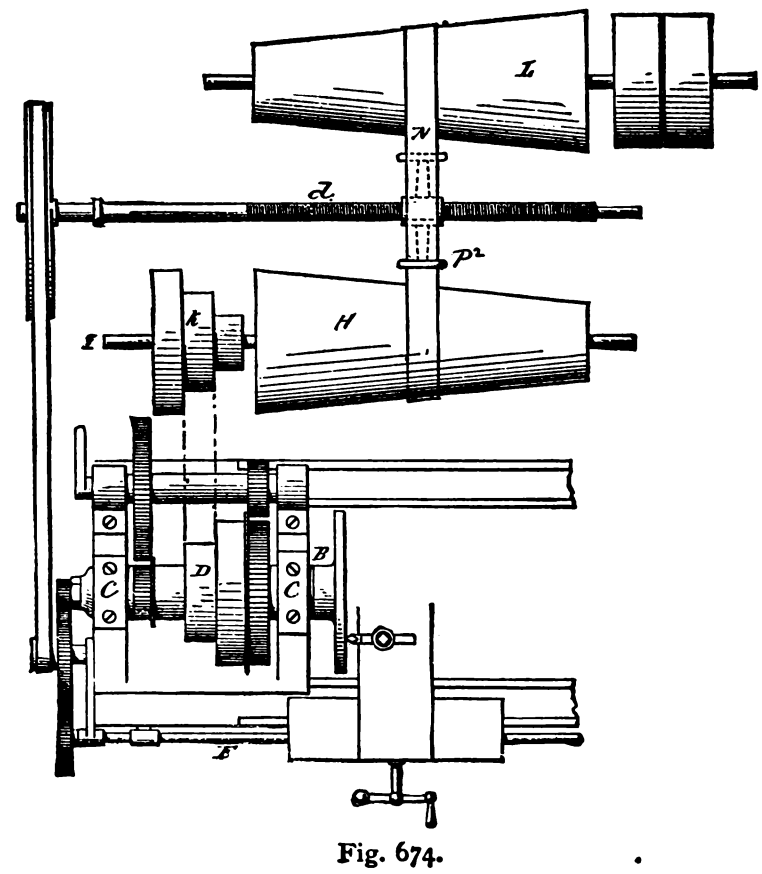

Fig. 674.

angle to the faces of the plates, as is necessary in setting jewels in a watch movement.

In holes of such small diameters as are used in watch work, it is manifestly very difficult to set them true by the ordinary methods of chucking, and it is tedious to test if they are true, and it is to obviate these difficulties that the pump centre head is designed. Its operation is as follows:

There are in this case three spindles, A, B, and C, in Fig. 667; A corresponds to spindle A in Fig. 651, driving the chuck D which screws on A as shown; B simply holds the work against the face *d* of D, and C holds the work true by means of the centre *e*, which enters the hole or centre in the work and is withdrawn when the work is secured by spindle B.

The chuck D is open on two sides, as is shown at E, E in Fig. 668, which is an end face view of the chuck, and through these openings the work is admitted to the chuck. The rod or spindle C is then pushed, by hand, endwise, its centre *e* entering the hole or centre in the work (so as to hold the same axially true) and forcing the work against the inside faces *d*, spindle B is then operated, the face *p* forcing the work against face *d*, and between these two faces *d*, *p* the work is held and driven by friction. The spindle C and its centre *e* is then withdrawn by hand, leaving the hole in the work free to be operated upon.

The journal bearings for spindle A are constructed as described for A in Fig. 651; spindle B is operated endways within A as follows: A is threaded at G to receive the hub H of wheel I, at the end of B is a collar which is held to and prevented from end motion within the hub H: hence when wheel I is rotated and A is held stationary (by means of the band pulley), H traverses on G and carries B with it. Operating I in one direction, therefore moves *p* against the work, while operating it in the other direction releases face *p* from contact with the work.

It is obviously of the first importance that the spindle C be held and maintained axially true, notwithstanding any wear, and that it be a close fit within B so as to remain in any position when the lathe is running, and thus obviate requiring to remove it. To maintain this closeness of fit the following construction is designed. Between spindle A and spindle B, at the chuck end of the two, is a steel bush which can be replaced by a new one when any appreciable wear has taken place. Between B and C are two inverted conical steel bushes, which can also be replaced by new ones, to take up any wear that may have taken place.

Fig. 669 represents an improved hand lathe by the Brown & Sharpe Manufacturing Company, of Providence, R. I. It is specially designed for the rapid production of such cylindrical work as may be held in a chuck, or cut from a rod of metal passing through the live spindle, which is hollow, so that the rod may pass through it. Short pieces may be driven by the chuck or between the centres of a face plate (shown on the floor at *e*) screwing on in the ordinary manner. When, however, this face plate is removed, a nut *d* screws on in its stead, to protect the thread on the live spindle.

The chuck for driving work in the absence of face plate *e* (as when the rod from which the work is to be made is passed through the live spindle) may be actuated to grip or release the work without stopping the lathe. The pieces *j*, *j* are to support the hand tool shown in Figs. 1313 and 1314, in connection with hand turning; the tool stock or handle being shown at *k* on the floor. The lever for securing the tailstock to or releasing it from the shears is shown at *t*. The tail spindle is operated by a lever pivoted at *g* so that it may be operated quickly and easily, while the force with which the tail spindle is fed may be more sensitively felt than would be the case with the ordinary wheel and screw, this being a great advantage in small work. The tail spindle is also provided with a collar *r*, that may be set at any desired location on the spindle to act as a stop, determining how far the tail spindle can be fed forward, thus enabling it to drill holes, etc., of a uniform depth, in successive pieces of work.

The live spindle is of steel and will receive rods up to ½ inch in diameter. Its journals are hardened and ground cylindrically true after the hardening. It runs in bearings which are split and are coned externally, fitting into correspondingly coned holes in the headstock. These bearings are provided with a nut by means of which they may be drawn through the headstock to take up such wear in the journal and bearing fit as may from time to time occur.

It is obvious that the lathe may be removed from the lower legs and frame and bolted to a bench, forming in that case a bench lathe.

Fig. 670 represents a special lathe or screw slotting machine, as it is termed, for cutting the slots in the heads of machine or other screws. The live spindle drives a cutter or saw *e*, beneath which is the device for holding the screws to be slotted, this device also being shown detached and upon the floor.

The screw-holding end of the lever *a* acts similarly to a pair of pliers, one jaw of which is provided on handle *a*, while the other is upon the piece to which *a* is pivoted. The screw to be slotted is placed between the jaws of *a* beneath *e*; handle *a* is then moved to the left, gripping the screw stem; by depressing *a*, the screw head is brought up to the cutter *e* and the slot is cut to a depth depending upon the amount to which *a* is depressed, which is regulated by a screw at *b*; hence after *b* is properly adjusted, all screw heads will be slotted to the same depth.

The frame carrying the piece to which *a* is pivoted may be raised or lowered to suit screws having different thicknesses of head by means of a screw, whose hand nut is shown at *d*.

The frame for the head of the machine is hollow, and is divided into compartments as shown, in which are placed the bushings used in connection with the screw-gripping device, to capacitate it for different diameters of screws, and also for the wrenches, cutters, etc.

Figs. 671, 672, and 673 represent a lathe having a special feed motion, designed and patented by Mr. Horace Lord, of Hartford, Connecticut. Its object is to give to a cutting tool a uniform rate of cutting speed (when used upon either flat or spherical surfaces), by causing the rotations of the work to be retarded as the cutting tool traverses from the centre to the perimeter of the work, or to increase as the tool traverses from a larger to a smaller diameter. If work of small diameter be turned at too slow a rate of cutting speed, it is difficult to obtain a true and smooth surface; hence, as the tool approaches the centre, it is necessary to increase the speed of rotation. As lathes are at present constructed, it is necessary to pass the belt from one step to another of the driving cone, to increase the speed. In this two disadvantages are met with. First, that the increase of speed occurs suddenly and does not meet the requirements with uniformity. Second, that the strain upon the cutting tool varies with the alteration of cutting speed. As a result, the spring of the parts of the lathe, as well as of the cutting tool, varies, so that the cut shows plainly where the sudden increase or decrease (as the case may be) of cutting speed has occurred. The greatest attainable degree of trueness is secured when the cutting speed and the strain due to the cut are maintained constant, notwithstanding variations of the diameter.

This, Mr. Lord accomplishes by the following mechanism: Instead of driving the lathe from an ordinary countershaft, he introduces a pair of cones which will vary the speed of the lathe as shown in Fig. 672 as applied to ball turning. L is a belt cone upon the countershaft driven from the line shaft. L drives H, which may be termed the lathe countershaft, and from the stepped cone K the belt is connected to the lathe in the usual manner. P is a shipper bar to move the belt N upon and along the belt cones, and thus vary the speed. R is a vertical shaft extending up at the end of the lathe and carrying a segment. This segment is connected to the belt shipper bar P by two cords, one passing from r^1 around half the segment to r^2, and the other passing from r^3 to r^4, so that if the segment be rotated, say to the right, it and the bar will move as denoted by the dotted lines, or if moved in an opposite direction, the bar motion will correspond and move the belt N along the cones respectively left or right.

At the back of the lathe is a horizontal shaft S, similar to an ordinary feed spindle, and connected to the segment shaft by a pair of bevel gears S^2. Between the two ears *e*, *e*, at the rear of the lathe carriage, is a pinion *t*, which drives the splined shaft S, which works in a rack T'. The tool rest is pivoted directly beneath the ball to be turned, after the usual manner of spherical slide rests, and carries a gear a^2, which, as the rest turns, rotates a gear

a^3. Upon the face of the latter is a pin a^4 working in a slot a^5, at the end of the rack T′ ; hence, as the tool rest feeds, motion is transmitted from a^2 through a^3, a^4, T^1, t, s and s^2 to R, which operates the belt shipper P. As it is the rate of tool feed that governs the speed of these motions, the effect is not influenced by irregularity in feeding ; hence the speed of the work will be equalized with the tool feed under all conditions. The direction of motion of all the parts will correspond to that of the tool feed from which their motion is directed, and therefore the work speed will augment or diminish automatically to meet the requirements.

Fig. 673 illustrates the action of the mechanism when used for surfaces, like a lathe face plate. In this case the two gears and the rack T′ simply traverse with the cross-feed slider, and the mechanism is actuated as before. In Fig. 674 a different method of actuating the belt shipper is illustrated. A pulley is attached to the intermediate stud of the change gears, being connected by

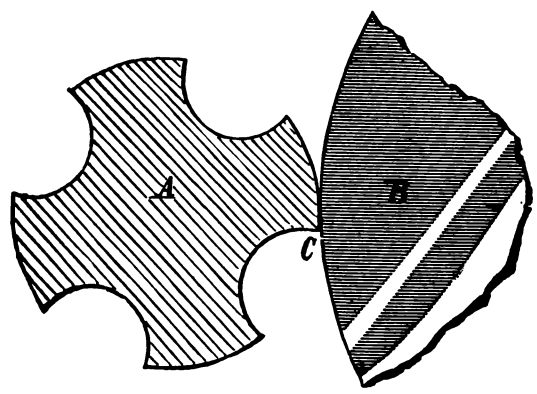

Fig. 677.

belt to the shipper, which is threaded as shown at d, the belt guiding forks, as p^2, being carried on a nut actuated by the screw d.

CUTTING-OFF MACHINE.—The cutting-off machine is employed to cut up into the requisite lengths pieces of iron from the bar. As the cutting is done by a tool, the end of the work is left true and square, and a great saving of time is effected over the process of heating and cutting off the pieces in the blacksmith's forge, in which case the pieces must be cut off too long and the ends left rough.

Fig. 675 represents Hyde's cutting-off machine, which consists of a hollow live spindle through which the bar of iron is passed and gripped by the chucks C, C. At G is a gauge rod whose distance from the tool rest R determines the length of the work. F is a feed cone driven by a corresponding cone on the live spindle and driving the worm W, which actuates the self-acting tool feed, which is provided with an automatic motion, which throws the feed out of action when the work is cut off from the bar. The stand S is movable and is employed to support the ends of long or heavy bars.

To finish work smooth and more true than can be done with steel cutting tools in a lathe, what are known as grinding lathes are employed. These lathes are not intended to remove a mass of metal, but simply to reduce the surfaces to cylindrical truth, to true outline, and to standard diameter; hence the work is usually turned up in the common lathe to the required form and very nearly to the required diameter, and then passed to the grinding lathe to be finished. The grinding lathe affords the best means we have of producing true and smooth cylindrical work, and in the case of hardened work the only means. In place of steel-cutting tools an emery-wheel revolved at high speed from an independent drum or wide pulley is employed, the direction of rotation of the emery wheel being opposite to that of the work.

Fig. 676 represents Pratt & Whitney's weighted grinding lathe. The head-stock and tail-stock are attached to the bed in the usual manner, the frame carrying the emery wheel is bolted to the slide rest as shown, the rest traversing by a feed spindle motion.

The carriage traverse is self-acting and has three changes of feed, by means of the feed cones shown.

To enable the lathe to grind taper work, whether internal or external, the lathe is fitted with the Slate taper attachment shown in Figs. 508 and 509.

It is obvious that in a lathe of this kind there must be an extra overhead shaft, driving a drum of a length equal to the full traverse of the lathe carriage, or of the plate carrying the head and tail stocks, and the arrangement of this drum with its belt connection to the pulley on the emery wheel arbor is sufficiently shown in figure. To protect the ways of the bed from the abrasion that would be caused by the emery and water falling upon them, guards are attached to the carriage, extending for some distance over the raised Vs.

It is essential that the work revolve in a direction opposite to that of the emery wheel, for the following reasons : In Fig. 677 let A represent a reamer and B a segment of an emery wheel. Now suppose A and B to revolve in the direction that would exist if one drove the other from frictional contact of the circumferential surfaces, then the pressure of the cut would cause the reamer A to spring vertically, and a wedging action between the reamer and wheel would take place, the reamer vibrating back and forth under varying degrees of this wedging ; as a result the surface of A would show waves and would be neither round nor smooth.

In the absence of a proper grinding lathe, an ordinary lathe is sometimes improvised for grinding purposes, by attaching to the slide rest a simple frame and emery wheel arbor with pulley attached, as in Fig. 678, in which A is the emery wheel, C the pulley for driving the arbor, and B the frame, D being a lug for a bolt hole to hold the frame to the lathe rest.

In some cases the work may remain stationary and the emery wheel only rotate. Thus, suppose it was required to grind the necessary clearance to relieve the cutting edge C of the reamer, then B could be rotated until C stood in the required position with relation to B, and the revolving emery wheel may either be traversed along, or the work may traverse past the wheel, according to the design of the grinding lathe, but in either case A remains stationary during each cut traverse ; after each successive traverse A may be rotated sufficiently to give a cut for the next traverse.

A universal grinding lathe, designed and constructed by Messrs. Landis Brothers, is shown in Fig. 1 (Plate XLIII.).

The platen upon which is mounted the head and foot stocks does not move to carry the work past the wheel in grinding, but is stationary, while at the back of the machine is a platen, which has a traversing motion, and upon this platen is mounted the carriage which carries the grinding wheel. The carriage is movable

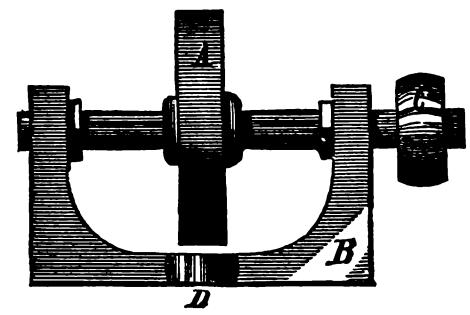

Fig. 678.

upon the platen endwise, and can be clamped to it any point, so that the motion of the platen can be made central upon its guiding surfaces, regardless of the length of the piece to be ground or the limits between which the wheel may travel.

Fig. 2 (Plate XLIII.), which is a cross-section of the machine through the middle of its length, shows the manner of attaching this traversing platen to the bed, and the carriage to the platen.

The head-stock is fixed rigidly to the pivoted platen, the foot stock only being movable, and as shown by Fig. 9 (Plate XLIV.), the latter is secured to the platen by a bolt, which is fitted to a T-slot at such an angle that, when it is drawn up, the foot-stock is drawn tightly against the square shoulder A, Fig. 2 (Plate XLIII.), at the back, upon which, of course, there is no wear of consequence, and thus exact alignment is secured. The foot-stock spindle is moved forward to the work by means of the knurled disk shown in Fig. 11 (Plate XLIV.), and as shown by this figure the disk is so connected with a spiral spring that the spindle may be held to the work by this spring, and with any desired degree of tension, or the spindle may be made rigid by tightening the lock nut above, the lower one being for altering the tension on the spring.

The head-stock spindle with its bearings can be removed from

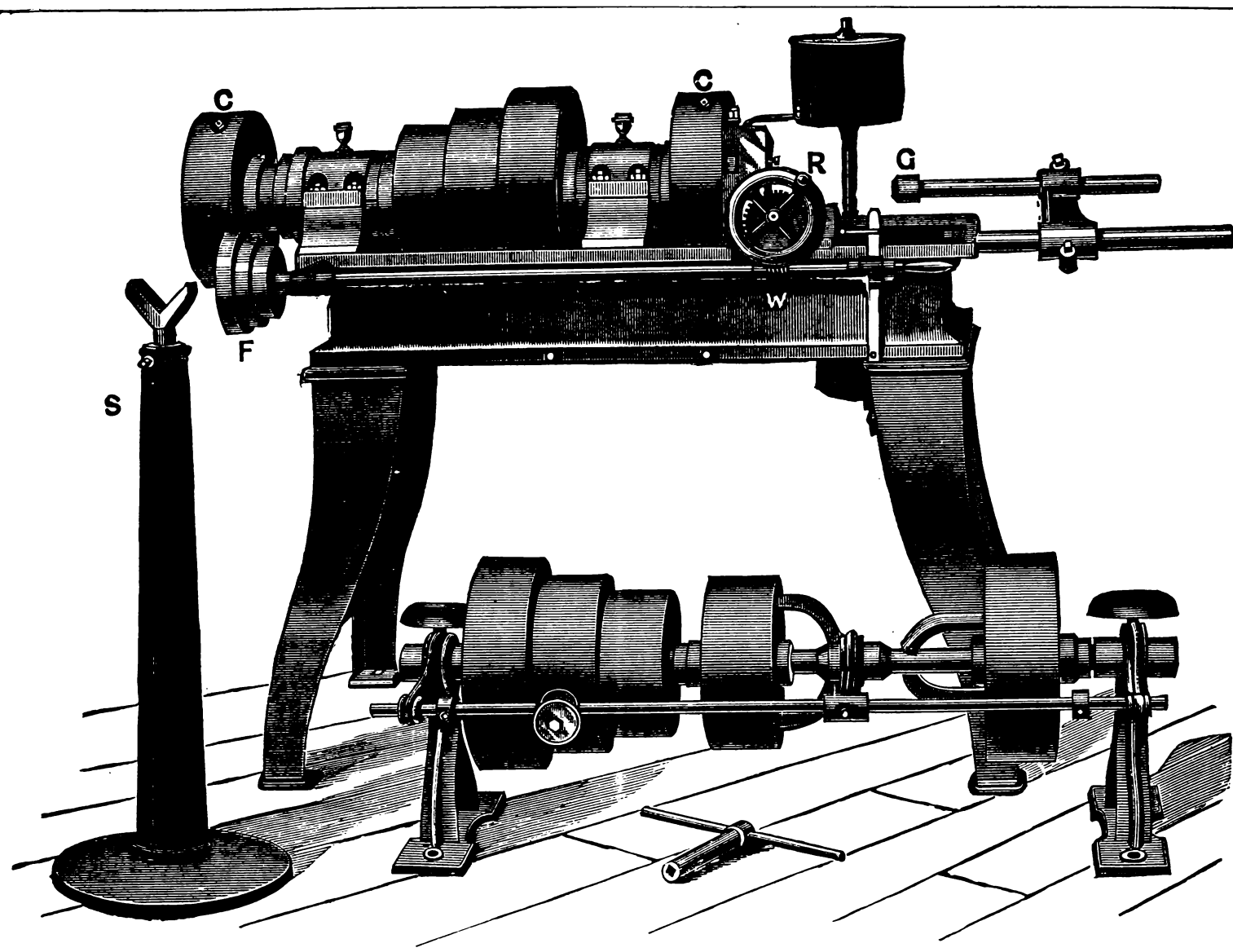

Fig. 675.

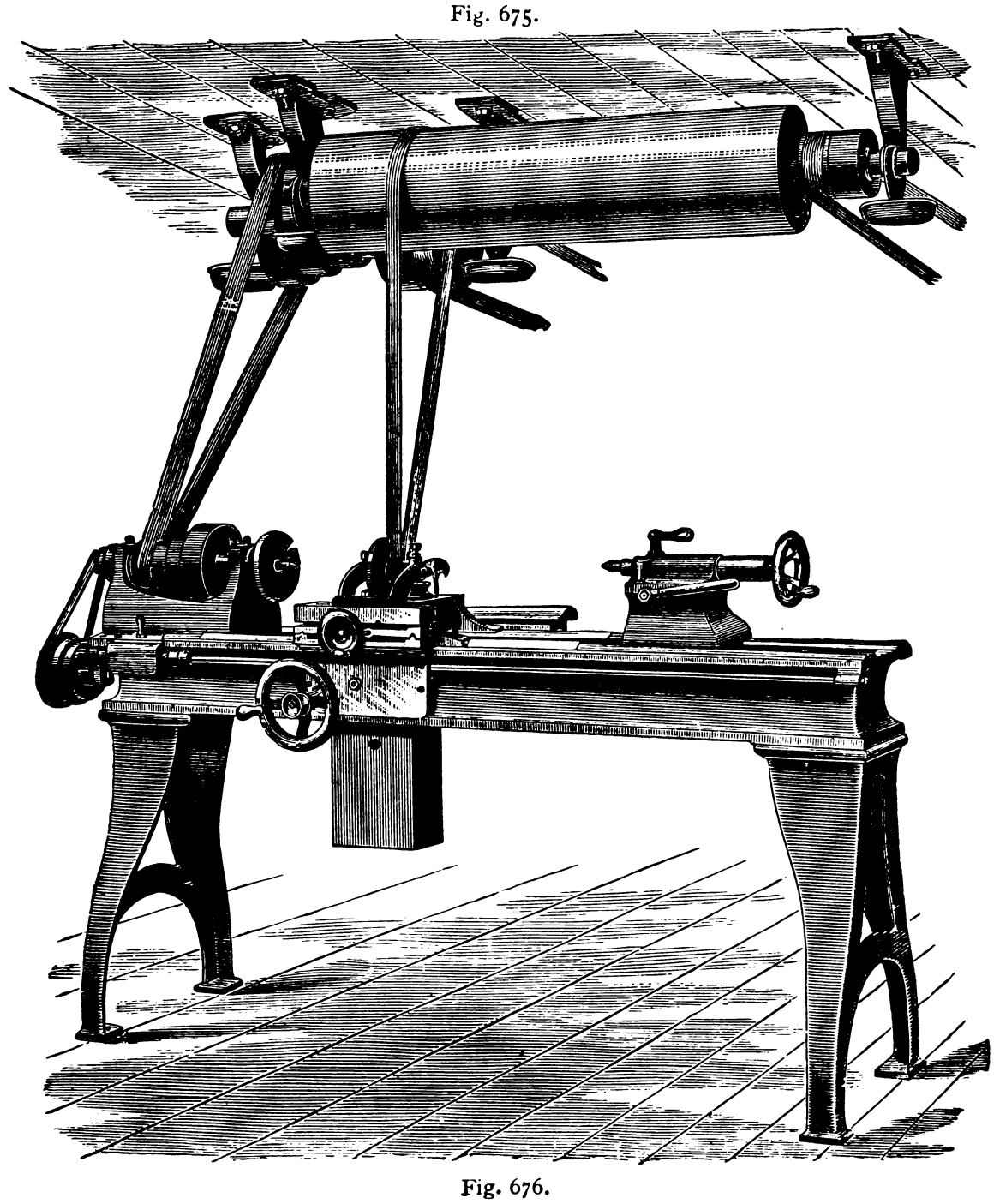

Fig. 676.

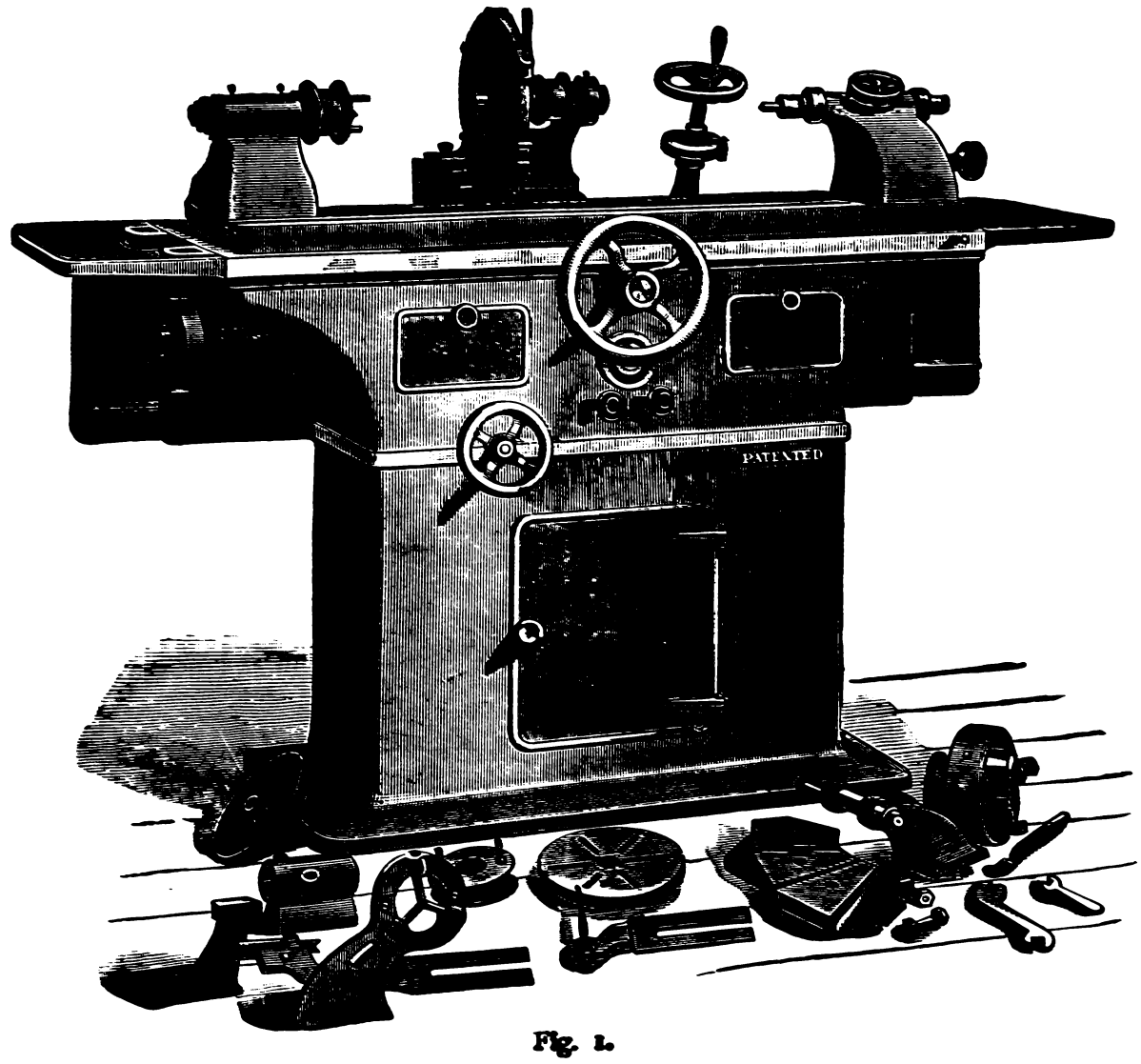

Fig. 1.

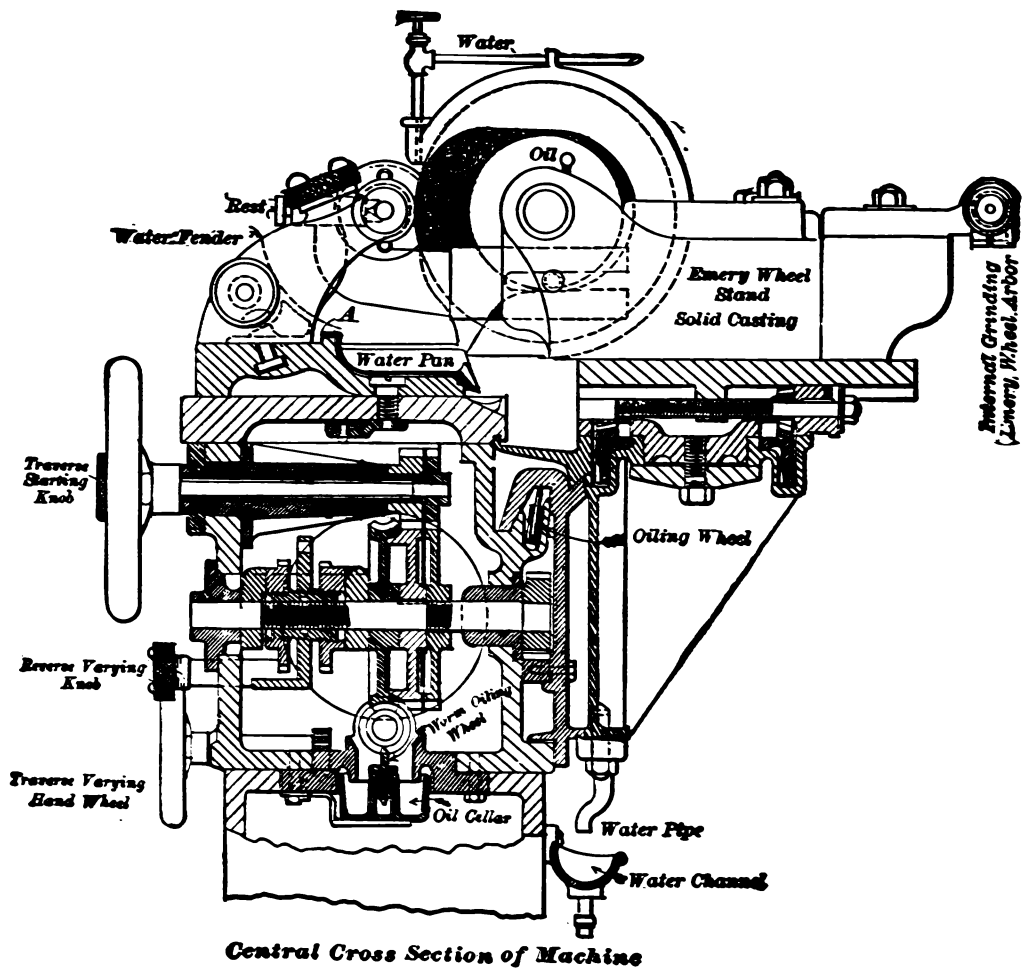

Central Cross Section of Machine

Fig. 2.

Top View showing Extreme Position of Pivoted Table.

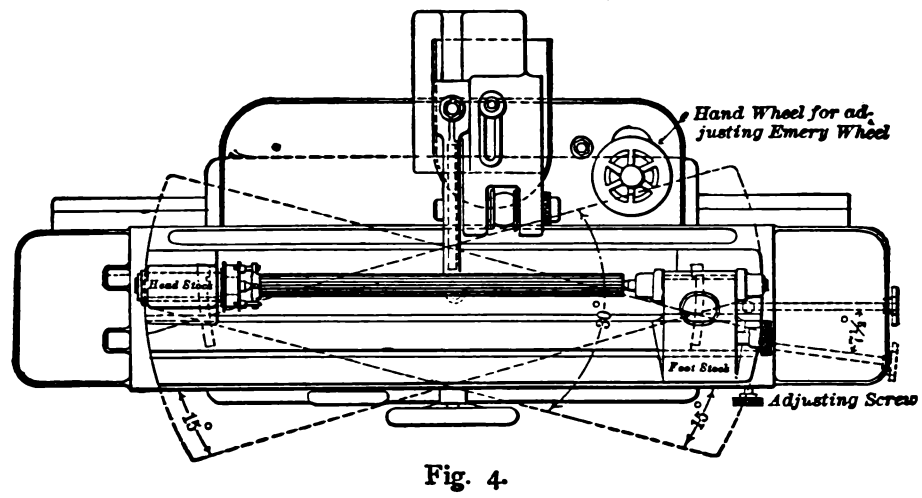

Fig. 4.

Sectional View showing Table Clamping Device.

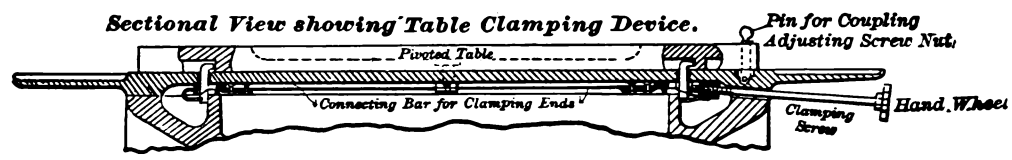

Fig. 5.

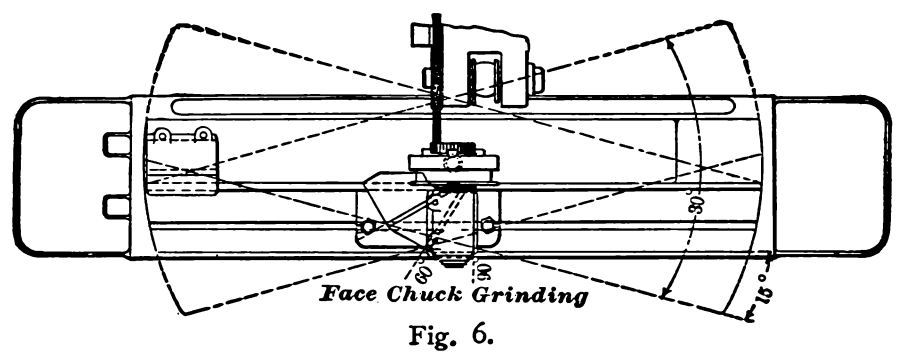

Face Chuck Grinding

Fig. 6.

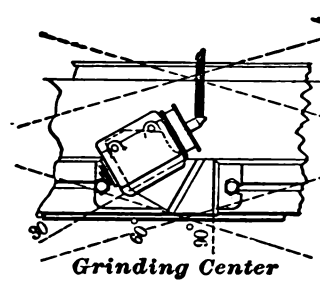

Grinding Center

Fig. 7.

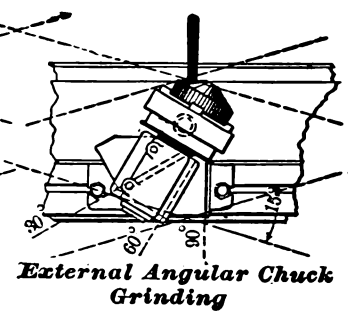

External Angular Chuck Grinding

Fig. 8.

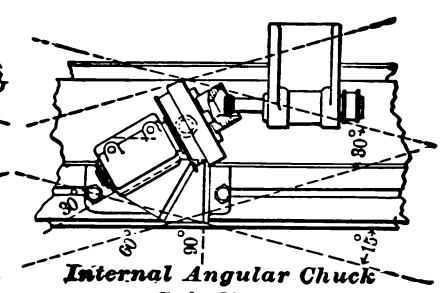

Internal Angular Chuck Grinding

Fig. 9.

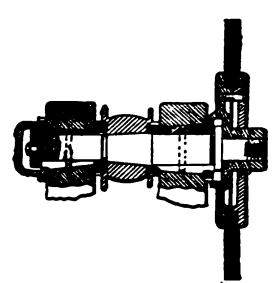

Section of Wheel Arbor Bearings

Fig. 10.

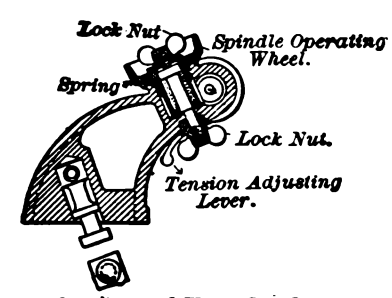

Cross Section of Foot Stock

Fig. 11.

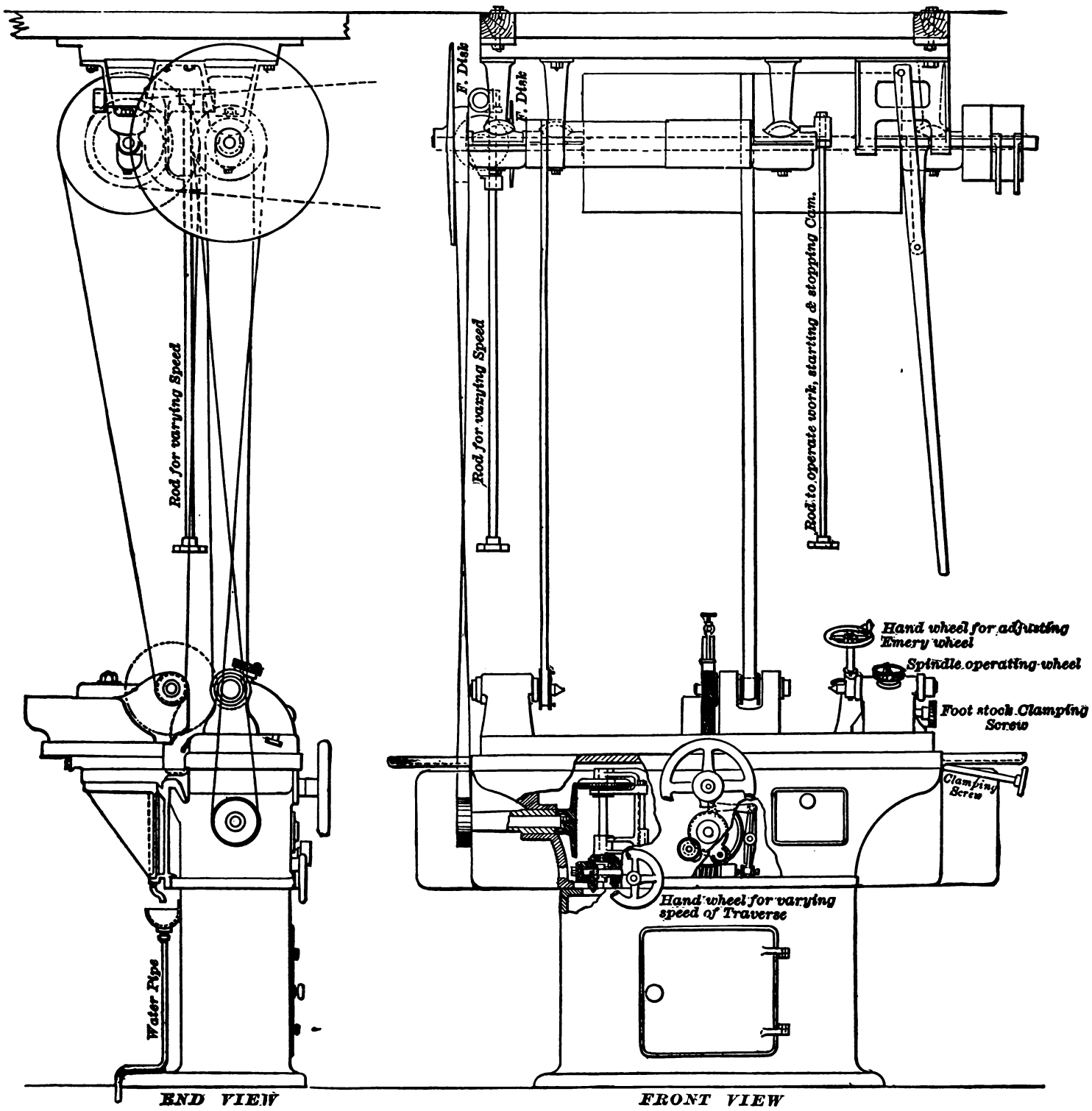
F. Disk
F. Disk
Rod for varying Speed
Rod for varying Speed
Rod to operate work, starting & stopping Cam.
Hand wheel for adjusting Emery wheel
Spindle operating wheel
Foot stock Clamping Screw
Clamping Screw
Hand wheel for varying speed of Traverse
Water Pipe
END VIEW
FRONT VIEW

the head-stock by loosening the two clamping screws shown, and can be put into the head, a plan view of which is shown in different positions by Figs. 6, 7, 8, and 9 (Plate XLIV.). This latter head is secured to a plate in which there are three slots at angles of 90, 60, and 30, with the slots in the platen, so that these angles, which usually are those most used, can be ground without disturbing the adjustment of the pivoted platen, and, of course, plates having slots at any desired angle can be provided.

In line with the centres is a pan formed in the platen, over which all grinding is done, and which catches all water and material ground off, and conducts it, by suitable channels, to a vessel on the floor; all needed shields and guards being provided, by which it is prevented from flying about the machine, and as will be seen by reference to Figs. 6, 7, 8, and 9 (Plate XLIV.), all grinding is done over this pan.

For other taper and angular grinding, the platen upon which the head and foot stocks are mounted swivels either way 15° from the centre line, as shown by Figs. 4 and 6 (Plate XLIV.), and is clamped at each end simultaneously by the hand-wheel shown at the left in Fig. 5, which also shows the arrangement of the clamping device. At the right-hand end of the platen are two sets of graduations, by which it may be set at an angle up to 15°, or to any taper up to 6 inches to the foot. Beneath the platen is a tangent adjusting screw, the nut of which can be connected or disconnected from the platen at will, and the clamping device can be swung to either side of the centre of the machine, thus allowing for the wide range of angular adjustment.

A section of the grinding spindle and boxes is shown at Fig. 10 (Plate XLIV.), where it is seen that things are so arranged that dust is excluded from the bearings, the spindle can readily be drawn out or the wheel changed. The head which supports the grinding spindle is made very heavy, with the object of absorbing vibration, and it can be made to travel to or from the centre line at any desired angle from 0° to 90°, the arrangement for giving this motion being shown by Fig. 2 (Plate XLIII.), where it is seen that a screw is provided, which swings around with the head, and is provided with a bevel pinion that is driven from the large ring bevel gear, a section of which is shown below the pinion, and which in turn is given motion by means of a pinion which is at the lower end of the shaft shown back of the foot-stock in the front view in Plate XLV. At the upper end of this shaft is the hand-wheel by which the emery-wheel is adjusted to the work, a dial being provided below the wheel by which movements of the cross slide are indicated in .0005 inch, so that each graduation represents a difference of .001 inch in diameter of cylindrical work being ground. Graduations are provided by which the angle at which the wheel moves is indicated.

By references to Plates XLIII. and XLV., the traversing mechanism will be understood. By the upper one of the two hand-wheels, shown at the front of the machine, the emery wheel can be traversed by hand, and at the centre of this hand-wheel is a knurled disk by which the automatic motion is brought into action. The smaller hand-wheel below, and at the left, is for varying the rate of this movement, and by turning this wheel while the machine is in motion the rate of the traversing movement can be increased or decreased at will, from the slowest ever required to one-half inch of movement of the wheel to one revolution of the work. In the front view (Plate XLV.), the mechanism by which this is accomplished is shown, there being a friction disk, which, by a rack and pinion movement, is moved vertically across the face of the disk which drives it. At the lower extremity of the shaft on which the movable disk is fixed is a bevel pinion which drives two others, as shown, and, of course, in opposite directions; these, by means of a double clutch, driving the worm shaft, which in turn drives the shaft which passes through the bed of the machine, and at its rear extremity carries the pinion which engages with the rack on the traversing platen, as shown by Fig. 2 (Plate XLIII.). The double clutch is thrown in either direction by means of the lever shown at the right of the worm gear in the front view (Plate XLV.), the point at which the reversal of the motion takes place being altered at will by turning either one of the two knurled disks shown in front of the machine, below the larger hand-wheel.

By means of friction disks at the countershaft, one of which is movable, the rotative speed of the work can also be varied at will by simply turning the rod shown at the left over the head-stock in the front view (Plate XLV.), the range of speed being from 10 to 450 revolutions per minute. It is thus made possible to secure any desired proportion between the rotative speed of the work or the traversing speed of the wheel almost instantly and without stopping the machine. The rod at the right stops or starts the work, and at the same time stops or starts the traversing motion, but without affecting the motion of the wheel.

The head and foot stock spindles, and the arbors for external and internal grinding, with their boxes, are of hardened steel ground true, and with provision for taking up wear. The head and foot stock spindles are hollow, for convenience in removing centres.

Self-oiling devices are provided for the worm gears and guide of traversing table, and pains have been taken generally to secure such a standard of workmanship as is demanded by a machine of this character. The overhead works are self-contained, and are provided with self-oiling and self-adjusting boxes.

The capacity of the machine shown is for work 30 inches long between centres, with 10 inches normal swing; 12 inches swing for face grinding will take in work 96 inches long between centres.

The top guide for the emery wheel traverse is automatically oiled by oiling wheels underneath the same. By running the traversing bar to the extreme positions either way the oil wells will be exposed, and can be filled with oil whenever necessary. The central oil well is filled when the traversing bar is to the extreme right-hand position; by sliding the emery wheel bracket to the right, a hole in the traversing bar is exposed, through which it can be filled with oil. The worm within the machine is also oiled in a similar manner. The oil well for this can readily be filled through the opening in front of the machine, or it can easily be removed from the machine through the lower door to fill it with oil or to clean it; it is secured by a turn button. Other points to be oiled will readily be seen, as some of them are marked "oil." To oil the bearing on the screw in the wheel base, run the base forward until the oil hole is exposed. Use oil of good quality.

Should the variable friction for the traverse ever be insufficient, increase the tension by slacking the set screw that holds the disk shaft bearing in the bed of the machine, and press it inwardly and fasten the screw again; this compresses the springs in the disk and increases the tension. To remove the friction wheel from the machine to replace a new friction ring, remove the water pan on top of the pivoted table; unscrew the pinion on the lower end of the vertical shaft (which has a left-hand thread); slide the key in the friction ring upward to remove it; loosen the collar on the lower bearing, which will allow the shaft to be pushed upward, and the wheel can be removed.

The point of traverse reverse is changed by two small knobs on the front of the machine. By slacking the thumb screw, the knobs can be turned; the one to the right if turned to the right will allow the emery wheel to travel farther to the right, and if turned to the left will stop it earlier; and the left knob turned to the left will allow the emery wheel to travel farther to the left, and if turned to the right will stop it earlier. When it is desired to run the emery wheel back out of the way for examination of the work, it is simply necessary to pull outwardly the knob that controls the motion in that direction, and turn it one or two revolutions, as is needed, in the direction that the wheel should move; and then, when running the wheel back again to position, turn the knob back again the same number of turns, and allow the pin to enter the hole in the knob; this gives the former position of reversal again exactly, without any resetting, which saves much time and the risk that otherwise might be incurred to the emery wheel when grinding close to a shoulder.

For grinding light shafts a sliding rest is used, which is secured to the emery wheel stand, in a seat provided on the same by a bolt. The head of this rest has a spring plunger with a wooden plug on the outer end, which is notched to rest against the shaft being ground. By slacking the thumb screw on the head, the spring gently presses the plunger against the shaft. This is done at the

end of the shaft and the screw tightened again which holds the rest firmly while grinding across the shaft, which insures straight work and prevents chattering. The same operations are repeated until the shaft is finished. To recede the emery wheel or to remove the work from the centres, it is simply necessary to slacken the thumb screw and draw back the plunger and again secure it. For light taper work a sliding rest cannot be used, and for this work the head on this fixture is put on another holder which is bolted to the table of the machine, and thus made to support a taper shaft in its centre, and allows the emery wheel to traverse past the rest.

The centre rest is used for shafts that are to be ground upon the ends or to grind out a hole in the end of a shaft, the other end of which can be held by the chuck.

The head-stock spindle is held stationary for grinding shafts which revolve upon fixed centres to produce true work. The spindle is held stationary by a pin on the back of head-stock, which is drawn outwardly to allow the spindle to revolve when chuck or face plate work is to be done. To revolve the spindle with the regular pulley it is locked to the same by inserting a pin in the hole in the face of the pulley; this is necessary to grind the centre. The sleeve upon which the pulley revolves can also be removed by this means when necessary to use the chuck or face plate.

The centre in the foot-stock is held into the work by a spring of variable tension, which is varied by a little lever on the back of the foot-stock. By slacking the thumb screw, the lever can be turned to increase or diminish the tension to whatever is desirable.

To grind the centres of the machine, transfer the head-stock bearings, as before described, to the thirty degree groove in the grooved plate, which will give the correct angle for the centre and retain the setting of the table in its true position for straight grinding, and the automatic traverse can also be used in doing the work.

The head-stock arbor bearings are adjusted by clamp screws; a small screw on the front of the bearing is released to allow the box to contract, which controls the amount of adjustment made on the bearings, as by screwing it up it will open the box when the clamping screws are released. The main emery wheel bearings are adjusted by the nut on the end of the boxes; by slacking the outer one and drawing up the inner, the box will be contracted. The foot-stock spindle bearing is adjusted by screwing up the dust caps, which will contract them.

To do very accurate grinding it is necessary to have the wheel arbor bearings, as well also the head spindle bearings, closely adjusted, even if they should warm a little, as the film of oil between the surfaces should be very thin to prevent any lateral motion in the bearings, which will insure accurate work. As phosphor bronze and hardened steel will not abrade, this can be done without any risk. Care must, however, be taken not to adjust them too tight.

The internal emery wheel arbor bearing at the emery wheel end is adjusted by slacking the screw in the pulley and the small screw at the bearing, and gently tapping the end of the arbor at emery wheel; this will cause the bearing to contract. To relieve it, gently tap the other end of the arbor. After proper adjustment has been attained, tighten the small screw in the pulley again. The small screw at bearing next to emery wheel prevents the bearing from turning and also locks it in position after adjustment has been made by tightening same. The bearings at the pulley are adjusted in same manner as those of the head-stock.

The emery wheel adjusting hand wheel has a graduated circle on it, divided into two hundred divisions, each of which represents one two-thousandth of an inch in the movement of the emery wheel, or the reduction of the shaft being ground in its diameter one one-thousandth of an inch. The dog on the wheel can be adjusted to any of these marks. In grinding a number of shafts of a size, after one shaft has been ground to the proper size, the dog can be set against the stop and fastened. In grinding the next shaft it is not necessary to measure the shaft until the dog comes against the stop; the shaft will then be as much larger than the former one as the emery wheel has worn down during this operation The micrometer caliper should always be used to measure the work, as by it you see exactly how much too large the work is and can set the dog back as much as the micrometer indicates the work too large; the wheel can then be adjusted until the dog comes against the stop.

The emery wheel is readily removed to replace another by turning the small buttons on the side on the fender, which will allow the side to come off.

To prevent the water from being thrown over the front of the machine and the finished parts, shields are employed to fasten to the table, which are quickly placed and removed whenever required. They are made to telescope each other, thus enabling them to cover any space that may be required for the work between the head and foot stocks.

The emery wheel bracket, on the traversing bar on the back of the bed, is secured by two clamp bolts at the lower edge. By unclamping the bracket it can be adjusted longitudinally on the bar to any point desired. This is done for the purpose of changing the position of the sliding bar on the guide, in case of doing short grinding for a time at one end of the machine; this divides the wear on the guide and keeps it covered.

This machine is also adapted to grind milling machine cutters and reamers. For this purpose the cutter grinding rest is used. This rest is secured to the wheel base in the same manner as the sliding rest; the thin blade on which the tooth of the cutter or reamer rests is adjusted to the proper height for clearance to the cutting edge, and is slid back and forth with the emery wheel in doing the grinding. Taper reamers, angular and spiral milling cutters, can as readily be ground.

A special chuck used for grinding the sides of milling cutters and thin saws is furnished with the machine. It is arranged with a chucking centre for one-inch holes; any other sizes can easily be arranged. This clamps the internal surface of the hole, and with a rod through the centre of the arbor, with a knurled disk at the rear, it is drawn against the surface of the chuck, forming a solid, true support. The cutter can readily be calipered with a micrometer at the slots in the face of the chuck.

NO. 2 IMPROVED UNIVERSAL GRINDING MACHINE.—A No. 2 improved universal grinding machine is illustrated in Fig. 679 and 1 to 21 following. The base of the machine rests upon three feet which project below the main casting, thus allowing for any irregularities that may be in the flooring, and preserving the alignment of the machine. Care should be taken, when setting the machine, to avoid blocking up between these feet, as there is liability of throwing the machine out of alignment.

The elevations and plan, Figs. 1 and 2, show the location of the overhead works in relation to the machine. The shafts should run in the direction indicated by the arrows. The emery wheel is controlled by the main belt shipper, and the work is revolved independent of the wheel. The wheel spindle and boxes are shown in section in Fig. 3.

Adjustment for end play of the spindle is made by means of the nut A, which is held in position by the check screw B.

The boxes are adjusted by the nuts C and D; to compensate for wear both nuts should be turned toward the back of the machine.

The spindle and boxes can be removed from the wheel stand without disturbing the adjustment of the boxes. Loosen the caps F F, which are hinged and held in place by the bolts E, Fig. 4.

The driving pulley and flange are made in one piece, fitted to the taper arbor I, Fig. 3, and held in place by the nut J.

The headstock is shown in Figs. 5 and 6. The boxes are properly adjusted before the machine is boxed for shipment; and, ordinarily, no adjustment for wear will be required for several years after the machine has been in operation. When adjustment for wear is required, remove the caps A A, Fig. 6, and scrape a small amount from the seats where they bear upon the head casting when in place. Before replacing the caps loosen screw B, Fig. 5, then replace caps and force them to their seats with the binding screws S S. After replacing the caps and forcing them to their respective seats, retighten screw B; this insures the boxes filling the space and preserving the alignment of the spindle. The screw C, Fig. 5, is for holding the box in position and should not be disturbed, unless for any reason the box is to be removed. When it is desired to grind

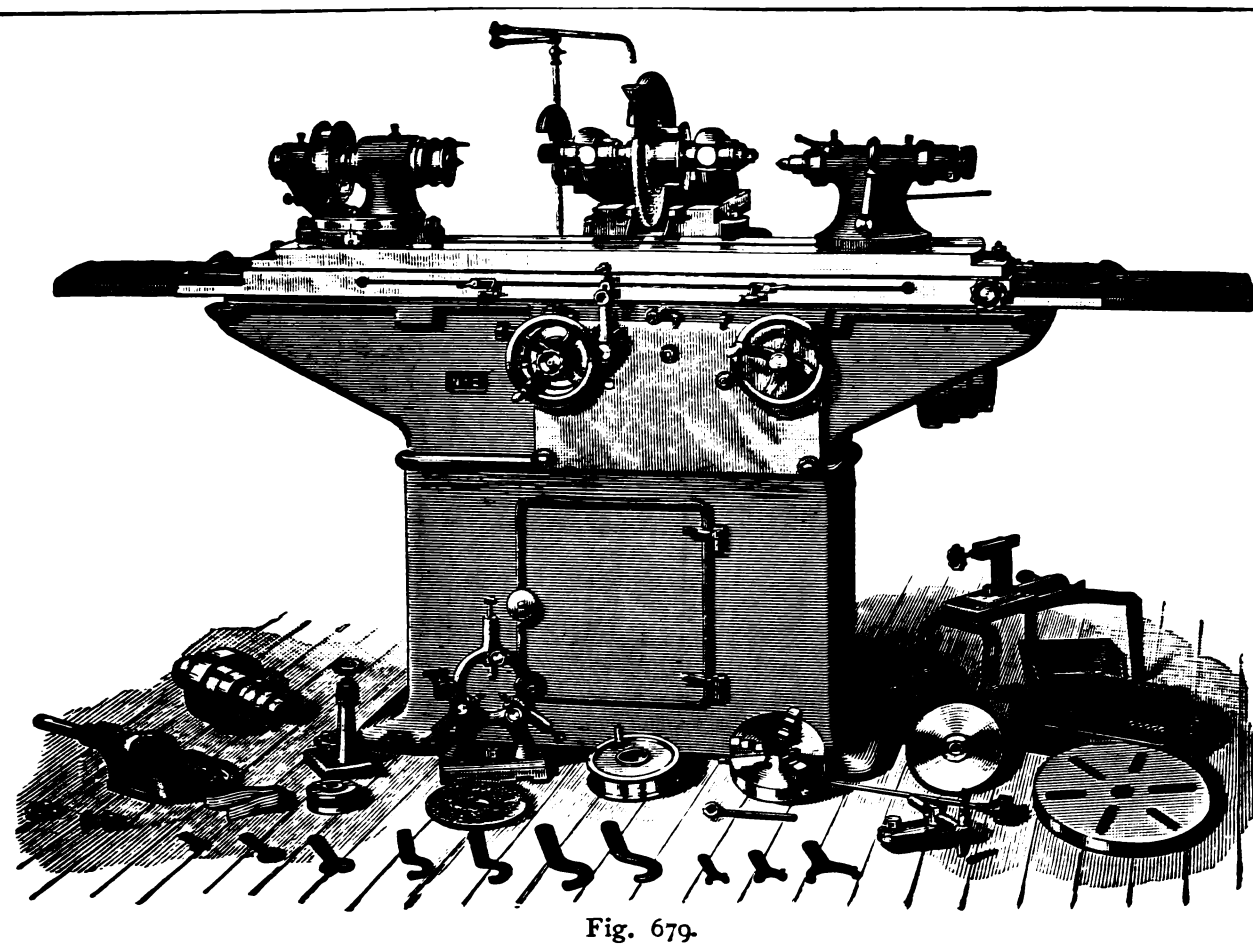

Fig. 679.

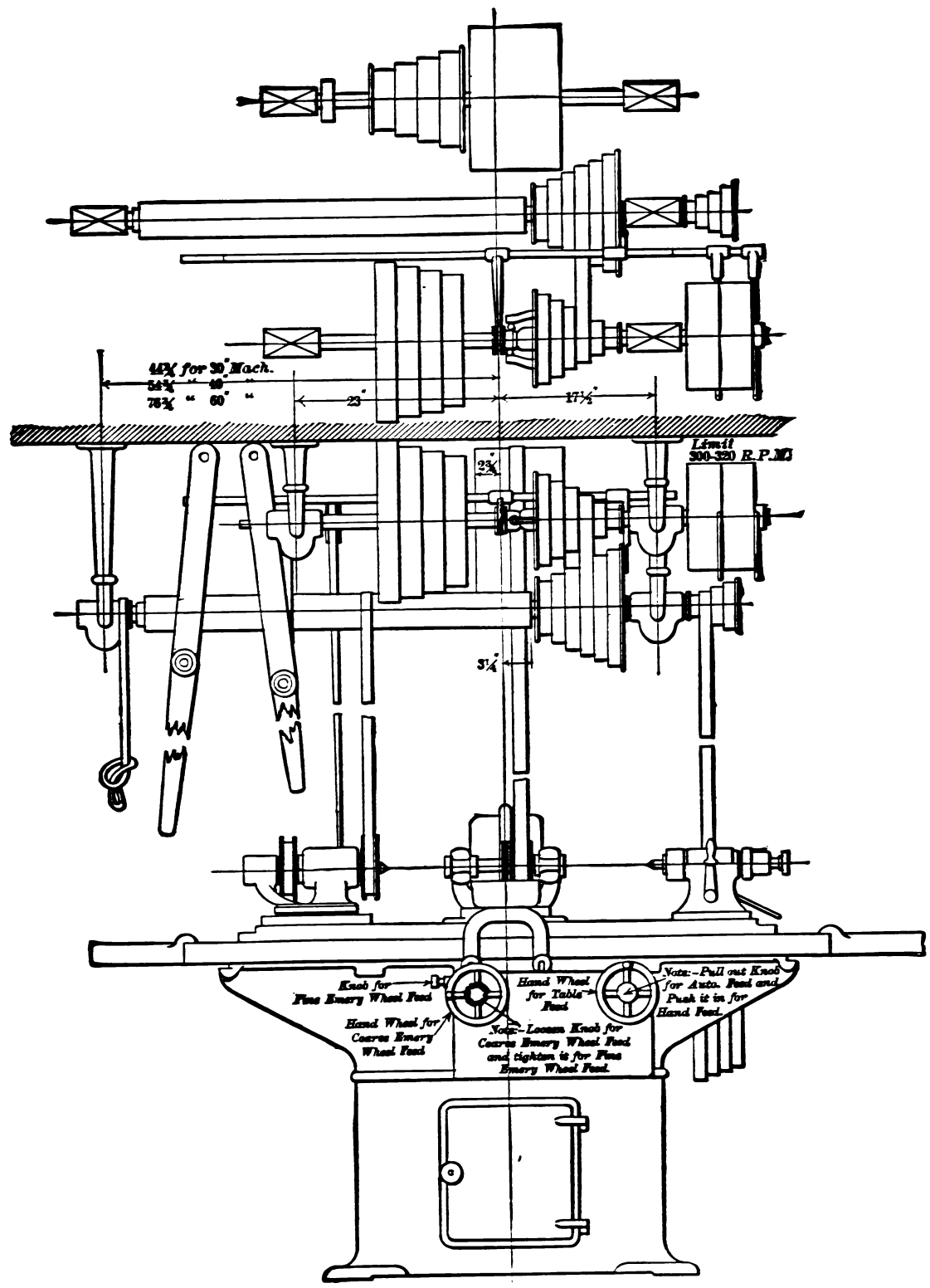
42¾ for 30" Mach.
54¾ " 48" "
78¾ " 60" "
23"
17½"
Limit
300-320 R.P.M.
23/4"
3¼"
Knob for Fine Emery Wheel Feed
Hand Wheel for Coarse Emery Wheel Feed
Hand Wheel for Table Feed
Note:-Loosen Knob for Coarse Emery Wheel Feed and tighten it for Fine Emery Wheel Feed.
Note:-Pull out Knob for Auto. Feed and Push it in for Hand Feed.

Fig. 1.

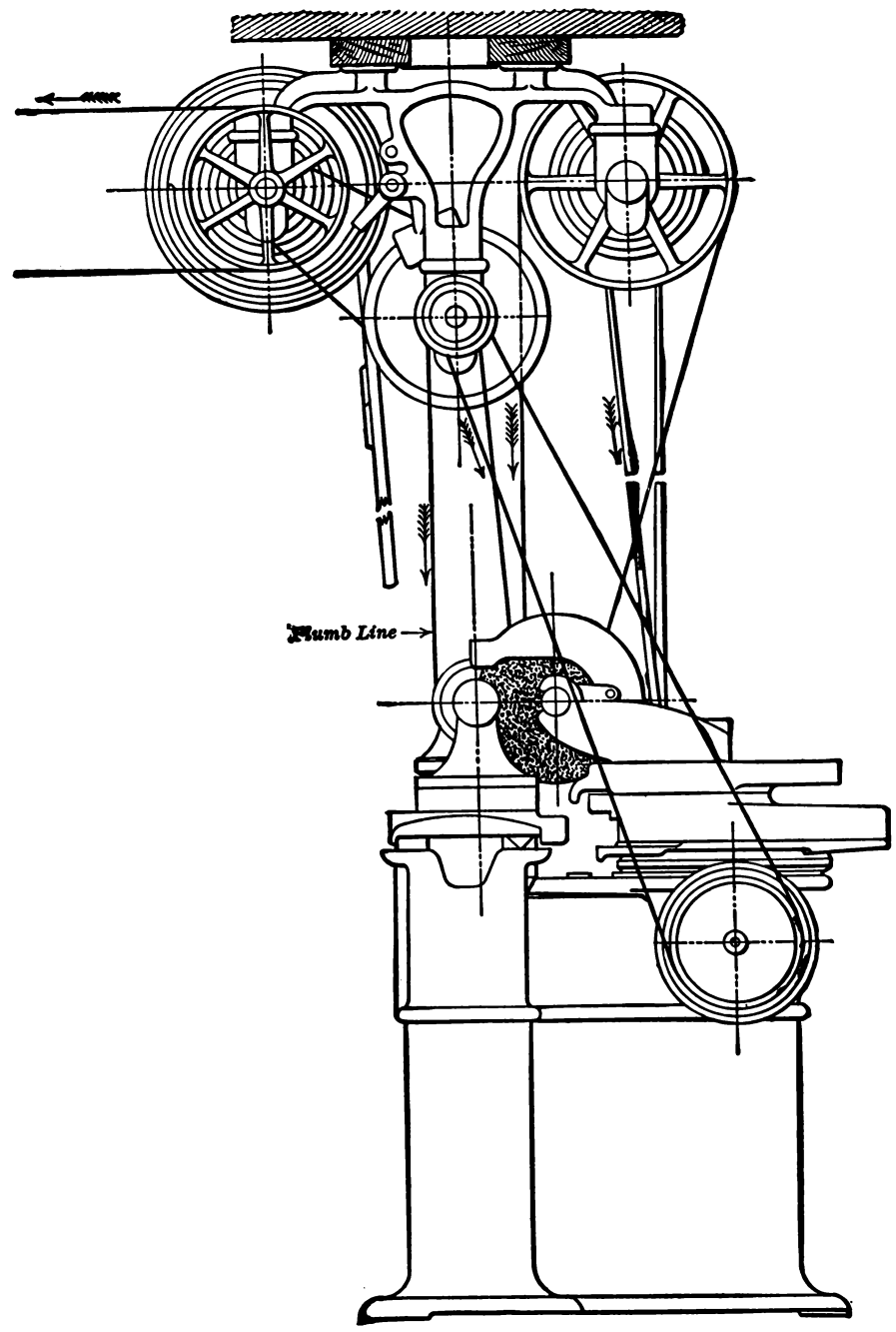

Fig. 2.

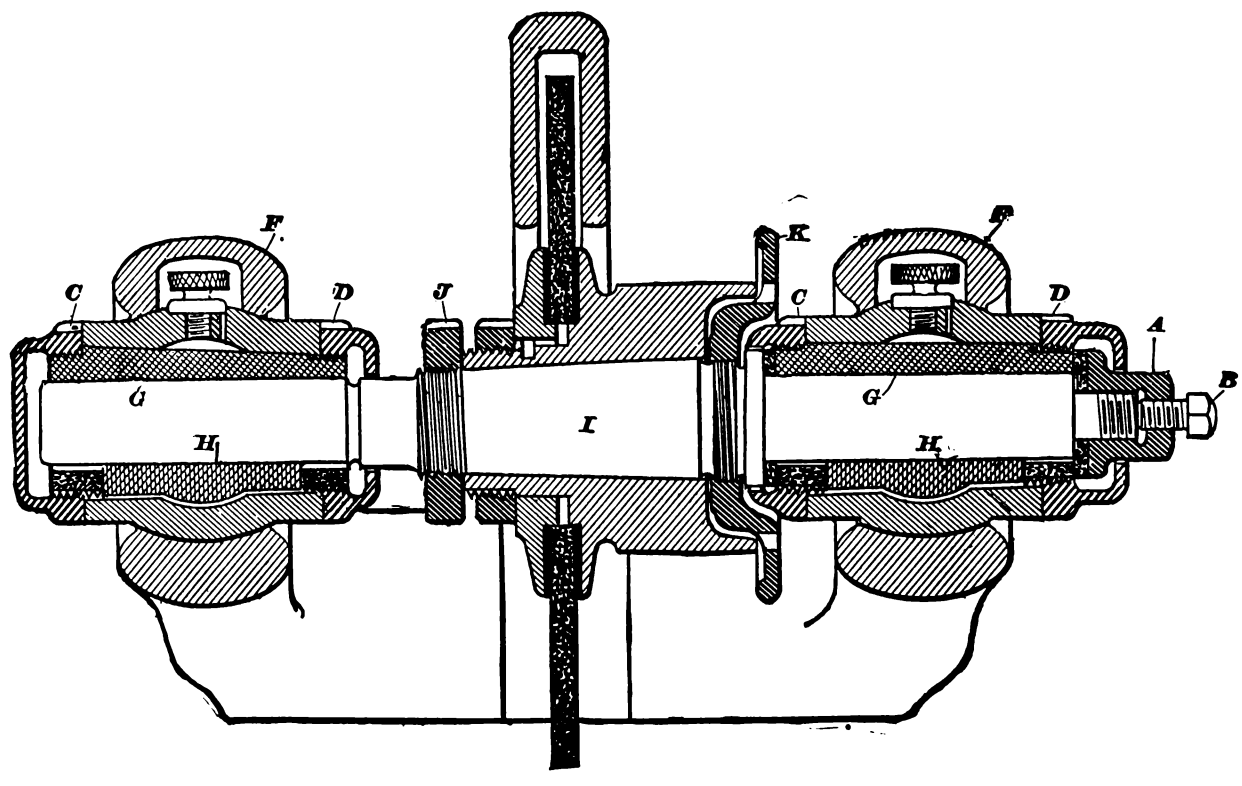

Fig. 3.

work on dead centers, the spindle is held in position by a pin, as shown in Fig. 6.

The footstock has compensation for wear of the spindle similar to the headstock; remove the cap, and scrape a small amount from its seat, replace and force to its seat with the binding screws.

When the internal grinding fixture is used the wheel spindle is removed and a speed spindle substituted. The driving belt from the overhead works should be crossed and run in the direction indicated by the arrows, Fig. 8.

Care and Use of Universal Grinding Machines.—As the durability of a machine very largely depends upon the care of the operator, it will soon become unreliable if not properly cared for, however well it may have been constructed. Especially is this true of grinding machines.

All wearing surfaces should be carefully guarded and kept well supplied with oil. Sperm oil should be used for the internal grinding fixtures. Care should be used to keep the oil holes free from dirt and emery grit.

The machines should be kept as clean as possible, and in no case should the bearings be allowed to "gum up." When the bearings are opened and exposed for any purpose whatever, they should be carefully wiped off before they are closed again, to free them from any grit that may have lodged under the surfaces.

The spindle boxes should be perfectly clean when put together. Before tightening the caps the oil space should be filled with good oil, never lard oil, and the wheel turned slowly while first one cap and then the other is screwed down until quite tight. The felt that supplies the oil to the spindle should be kept clean where it rubs upon the spindle.

A loose fit between the spindle and its boxes will produce imperfect work, so that when very fine work is required the bearings should run nearly, if not quite, metal to metal. This necessarily causes the boxes to heat; but as the boxes are of bronze and the spindle of hardened steel, unless exceedingly tight, the belt will slip before abrasion can occur.

All end motion should be taken out of the spindle before the wheel is used on work.

To insure accuracy in the finished work the cross slide should move smoothly. It should be moved its entire length, wiped clean, and thoroughly oiled at least *once* a day. The shafts connecting the slide with the hand wheel should also be well oiled, especially the vertical shaft.

The cross-slide gib is properly adjusted before the machine is packed for shipment; and, ordinarily, does not require adjustment until the entire slide needs refitting.

It is made in such a manner that it cannot be adjusted in the usual way. When adjustment is required the gib should be removed, and its bearings upon the fixed slide scraped off, thus compensating for any wear that may occur. In no case should the gib be allowed to bind, as this will cause "jumping in" of the wheel and inaccuracy in the work being ground.

The wheel, together with the driving pulley, can be removed from the arbor by loosening the nut J, and screwing up the belt flange K, Fig. 7, with the pin-wrench provided for that purpose.

The emery wheels should be kept true. This can be easily done by using a diamond tool, known as the block diamond, or carbon point, held in the hand, or in the fixture furnished with the machine. A new wheel should be started slowly and trued gradually. Fig. 9 shows the method of truing the face of the wheel, and Fig. 10 the side.

In mounting emery wheels there should always be elastic washers placed between the wheel and the flanges. Sheet rubber is the best for this purpose, but soft leather will answer very well. In some cases, manufacturers of emery wheels attach thick soft paper washers to each side of the wheel. When this is done it is all that is necessary.

A satisfactory emery wheel is an important factor in the production of good work. Too much, however, must not be expected of one wheel. A variety of shapes, sizes, and grades of wheels is necessary to bring out all the possibilities of the grinding machine, the same as a variety of shapes and sizes of tools is necessary to obtain the best results from the lathe or milling machine.

In machine grinding it is desirable, in order that the cut may be constant and give the least possible pressure and heat, to break away, by the act of grinding, the particles of the wheel as they become dull. It is this faculty of yielding to or resisting the breaking out of the particles that is called the grade. The wheel from which the particles can be easily broken is called soft, and the one that retains its particles longer is called hard. It is evident that the longer the particles are retained the more dull they will become, and the more pressure will be required to make the cut. Retaining the particles too long causes what is familiarly known as "glazing."

Wheels are numbered from coarse to fine; that is, a wheel made of No. 60 emery is coarser than one made of No. 100. Within certain limits, and other things being equal, a coarse wheel is less liable to change the temperature of the work, or glaze, than a fine wheel. As a rule, the harder the stock the coarser the wheel required to produce a given finish. For example, coarser wheels are required to produce a given surface upon hardened steel than upon soft steel, while finer wheels are required to produce the same surface upon brass or copper than upon either hardened or soft steel.

Emery wheels are made in a number of grades in order to meet a great variety of conditions without the necessity of changing the wheel speed for every condition. Wheels for soft steel are harder than for hardened steel or cast iron. For brass, copper, and rubber, they are much softer. The temper of a wheel is dependent upon the quality of the corundum particles to withstand dulling, so that the better the material the better the temper.

Wheels are graded from soft to hard, and the grade is denoted by the letters of the alphabet; A denoting the softest grade. A wheel is soft or hard according to the amount and character of other material combined in the process of manufacture with emery, or corundum; but, other characteristics being equal, a wheel that is composed of fine emery is more compact and harder than one made of coarser emery. For instance, a wheel of No. 100 emery, grade B, will be harder than one of No. 60 emery, same grade.

A soft wheel is less apt to change the temperature of the work, or to become glazed, than a hard one. It is best for grinding hardened steel, cast iron, brass, copper, and rubber, while a harder and more compact wheel is better for grinding soft steel and wrought iron. As a rule, the harder the stock the softer the wheel required to produce a given result.

If a wheel is hard and heats or "chatters," it can often be made more effective by turning off a part of its cutting surface; but it must be clearly understood that while this will sometimes prevent a hard wheel from heating or "chattering" the work, such a wheel will not prove as economical as one of the full width and proper grade.

The width should be in proportion to the amount of material to be removed with each revolution; and, as the wheel cuts in proportion to the number of particles in contact with the work, less stock will be removed by a narrow wheel than by one that is of full width. The feed will also have to be finer if a narrow-faced wheel is used.

If the wheel is of the right grade it will, as a rule, improve the quality of the work if used with full width of face. Judgment should be used in deciding upon the width of wheel to be used, as sometimes the work is of such size and shape as to make it necessary to use a wheel with a narrow face. Where this is the case, and strength will admit, the wheel should be of the same width throughout.

Wide wheels and fast table feeds can be used on all work where the wheel can pass one-quarter to one-half of its thickness beyond the end of the work, or over a recess; but a narrower wheel is the best when grinding against shoulders not recessed, or when the recess is narrow.

The speed of work and cut of the wheel bear such close relation to each other that it is best to consider them together. The surface speed of the work should be proportional to the grade and speed of the wheel. For example: If a piece 1 inch in circumference is being ground successfully with a given wheel, and the wheel is sizing accurately in response to the graduations on the

cross-feed wheel, a piece 2 inches or 3 inches in circumference would, with the same wheel and number of revolutions, show a coarser surface; and the wheel would cut larger than shown by the graduations on the cross-feed wheel. On the other hand, if the same surface speed was used in both cases the results would be the same.

A wheel for machine grinding must cut without pressure, to effect which, it must always be sharp; this is maintained by the breaking out of the particles. Therefore, a wheel of the proper grade to cut at a given work speed possesses "sizing power," or the ability to size uniformly without breaking away its own particles too rapidly; obviously, if the work is revolved at a higher speed, the particles will be torn away too fast, and the wheel will lose its "sizing power." It will thus be seen that the work speed should always bear the proper relation to the cut of the wheel, regardless of the diameter of the work.

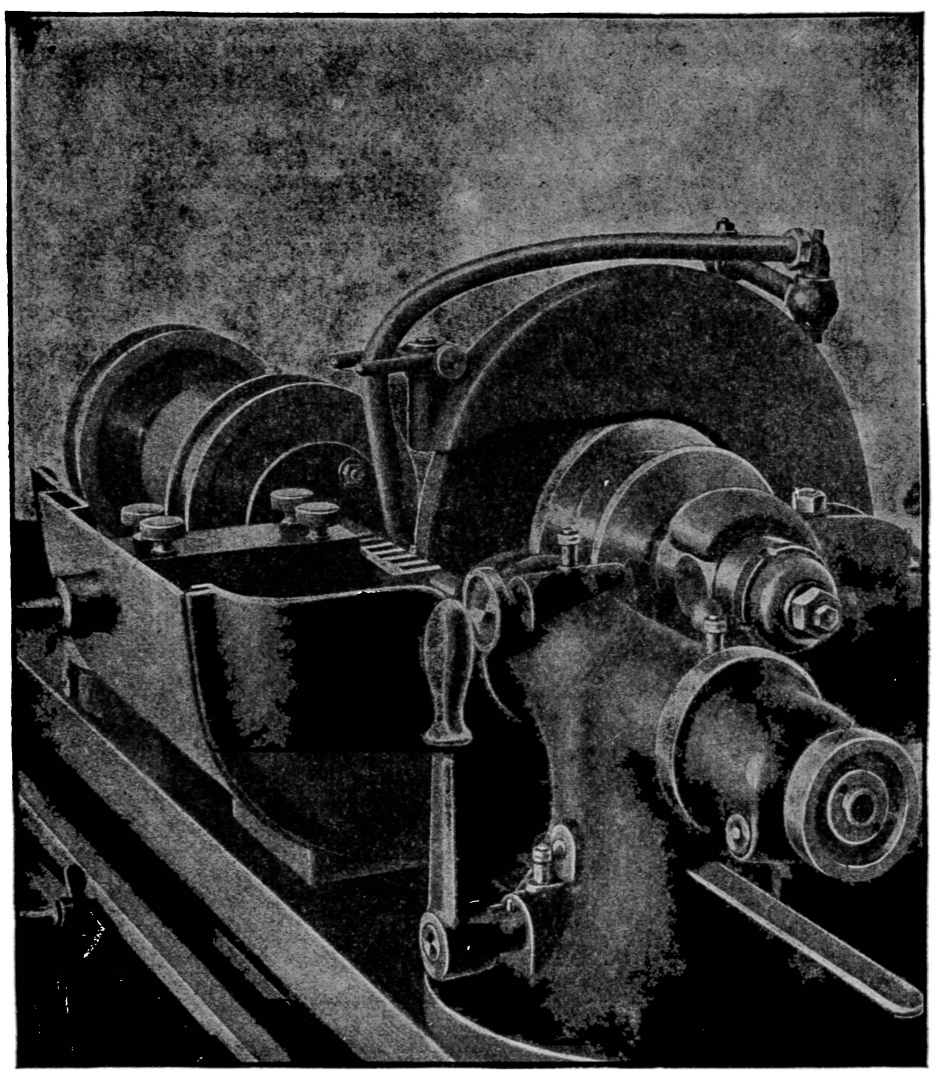

Fig. 16.

By change in temperature one should not understand that the change is necessarily sufficient to be detected by the hand. It is probable that very few pieces of steel are so uniform in texture that they will not change their outline with a very slight change of temperature, even though the temperature be the same throughout the piece. It is also well known that the slightest increase of temperature, unevenly distributed, of a piece of steel, will cause a change in outline. For example: If the finger is placed upon one side of a bar it will cause an elongation of the metal directly under it, and the heat of the finger will be absorbed by the bar, as shown in Fig. 11, leaving as the warmest part that portion where the heat enters.

The amount of expansion is necessarily very small, but when one considers that a "clean-cutting" wheel, in many instances, will show sparks with a cut less than one-hundredth part of one-thousandth of an inch, it is readily understood how a very slight change of outline will be detected by the grinding machine.

The application of the wheel to the work is best understood by reference to Fig. 12. When the red-hot sparks of steel pour from the bar, it is easily seen that there is considerable heat at the point of contact; and since the heat is necessarily greater at that point than elsewhere, the bar will constantly bend toward the wheel. In such cases, the workman speaks of the wheel as "drawing in," when in reality it is the work that approaches the wheel by revolving with a greater expansion under the wheel than at any other point.

As a rule, the bar will not bend with perfect uniformity, owing to the tension within itself. A given amount of heat being more effective on one side than on the other, the wheel cuts deeper on the side so affected; and the instant this occurs the deeper cut will develop more heat than the other, until, as it is not equalized fast enough, it is sufficient for a portion of it to remain until it revolves to the wheel again and is added to the heat of the next revolution. The expansion is thus constantly increased until the bar is bent enough to revolve without the wheel touching the whole circumference; after which, as the heating is so much greater on one side, the bending increases. The heat being almost instantly equalized upon the removal of the wheel, the bar will return to its normal position and leave the other side of greater radius; so that on its return the wheel will cut on the opposite side, and cause the bar to bend this side toward the wheel, thus leaving it elliptical in form. If, as sometimes happens, these two bends have been exactly opposite, the next cut of the wheel will be on two points, and if the bar is of perfectly even tension on these two sides it will continue to cut both sides; but, usually, the bar will not bend exactly opposite at first. The successive cuts will, therefore, be somewhat as follows: *1st*, completely around the circumference; *2d*, on one side; *3d*, the opposite side; *4th*, at right angles; *5th*, opposite again, and so on.

In grinding tubing the change due to expansion is more aggravated, as the hollowness of the piece operated upon does not permit of such a rapid conduction of the heat to the opposite side of the axis.

It has been stated that a bar is not affected by change in temperature until the turning marks are ground out. One reason for this is that the ridges act to file the surface of the wheel, causing it to cut more freely; and as there is less stock to remove when cutting the ridges, there is less heat generated; furthermore, the surface not being continuous, prevents longitudinal expansion of the warm side of the bar.

Water should be used on such classes of work as are injuriously affected by a change of temperature caused by grinding. It should also be used upon work revolving upon centres, as in this class of work a slight change in temperature will cause the wheel to cut on one side of the piece after it has been ground apparently round.

In very accurate grinding water is especially useful, for the exactness of the work will be affected by a change in temperature which is not perceptible to the touch. It is well to use the water over and over again, as there is thus less difference between the temperature of the water and the work than if fresh water is used.

Work that will grind smooth with water will often develop minute vibrations when grinding dry. There is, apparently, a rapid fluctuation of temperature, which causes the work to approach and recede from the wheel very rapidly, thus leaving a mottled or rough surface.

In addition to the changes of speed, it is necessary, many times, to use a rest, or support, for the work. There are two kinds of these rests: one is commonly known as the back rest, and remains at the same point of the work regardless of the position of the wheel; the other, the follow rest, remains opposite the cutting point of the wheel. The follow rest is used to absorb vibration, caused by the emery wheel, when grinding long slender pieces; and should be so placed that only the high points of the work will touch as it is revolved. When used, it is of great assistance in producing accurate work. The cut of the wheel and the pressure on the rest may be increased as the work approaches a perfectly cylindrical form. In other words, when work is commenced upon a piece, the rest should be considered more as an absorbent of the vibration than as a support. After the work has become quite round, the rest can be used to regulate the size

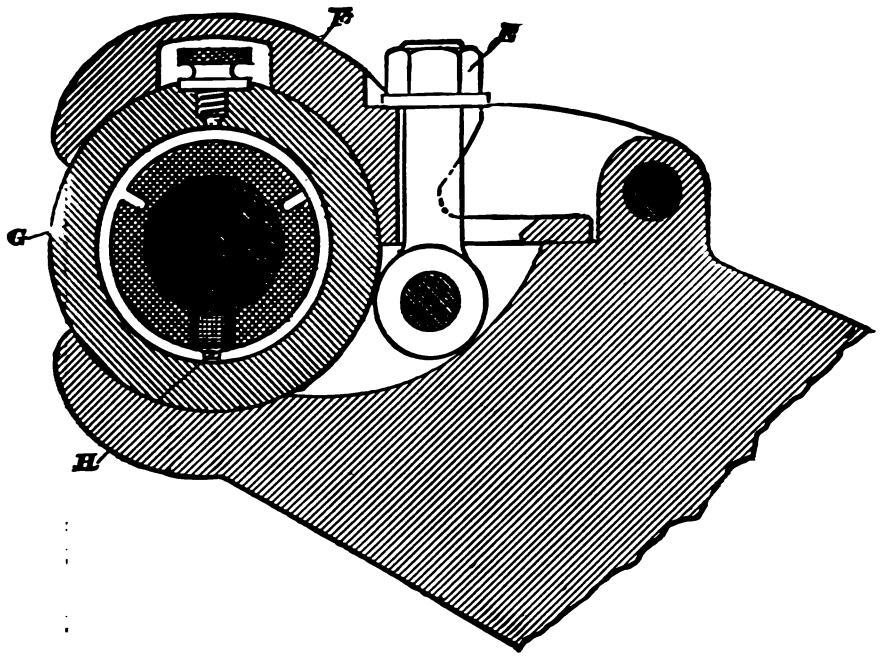

Fig. 4.

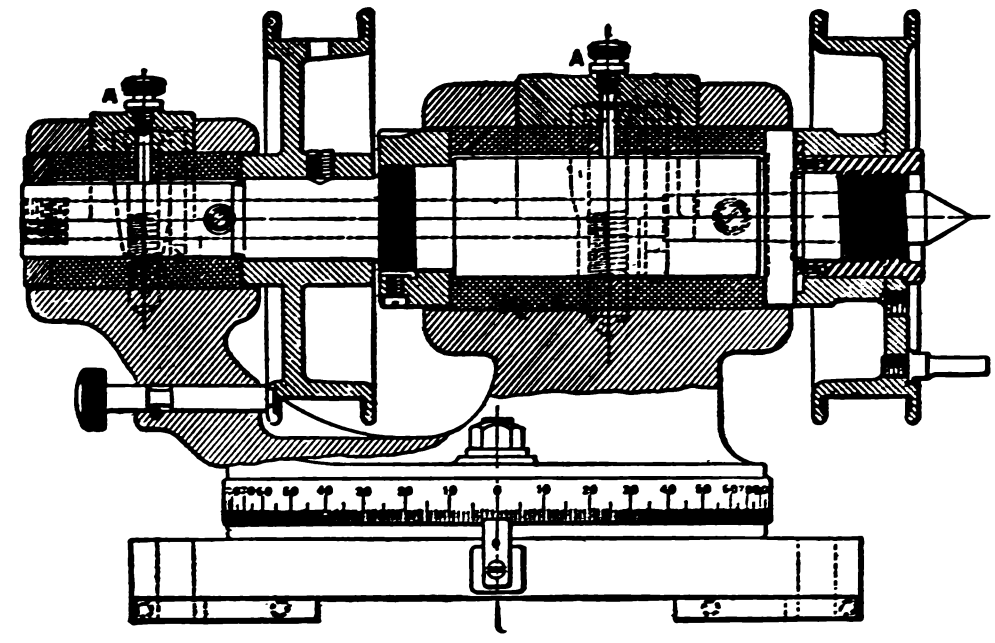

Fig. 6.

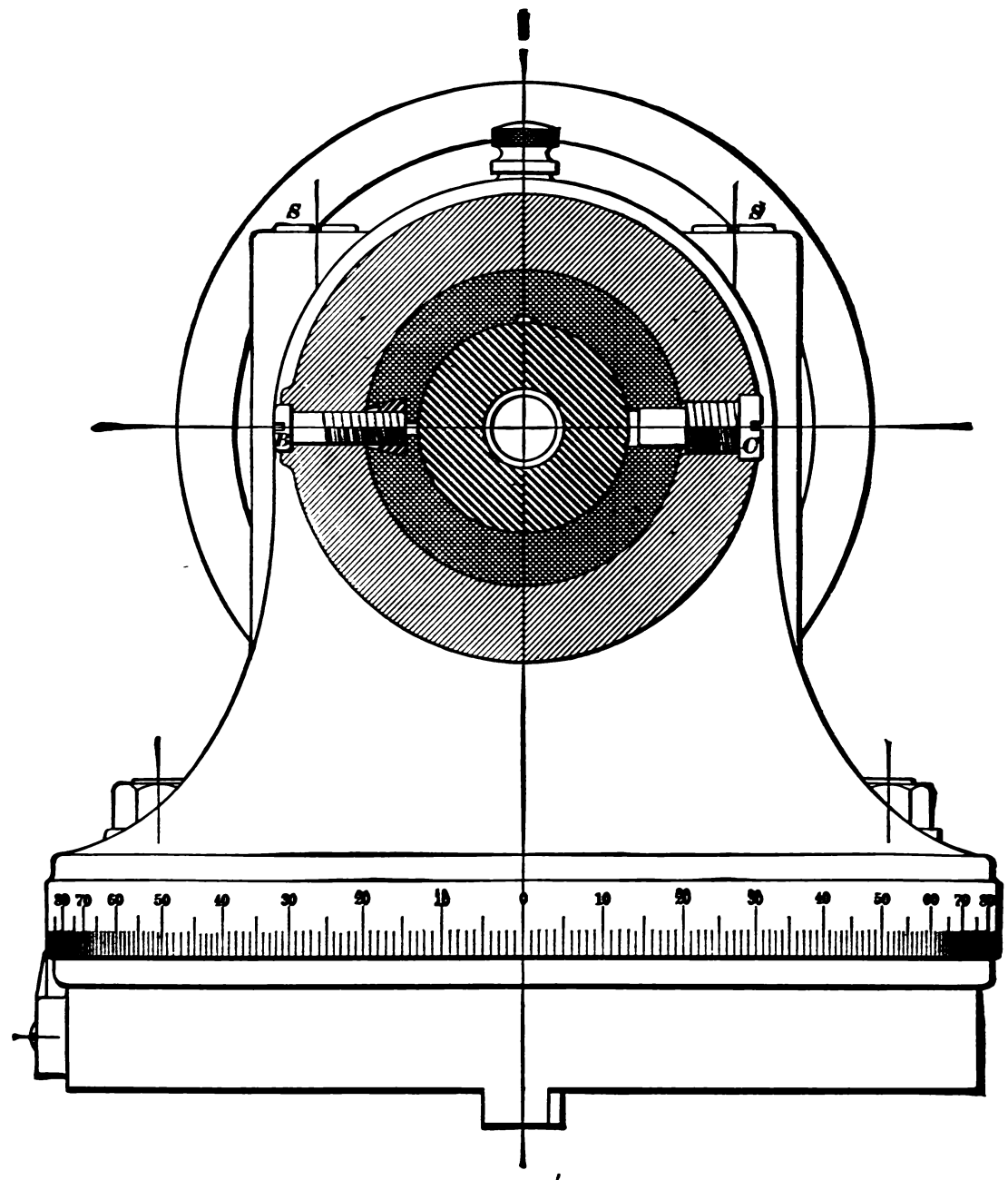

Fig. 5.

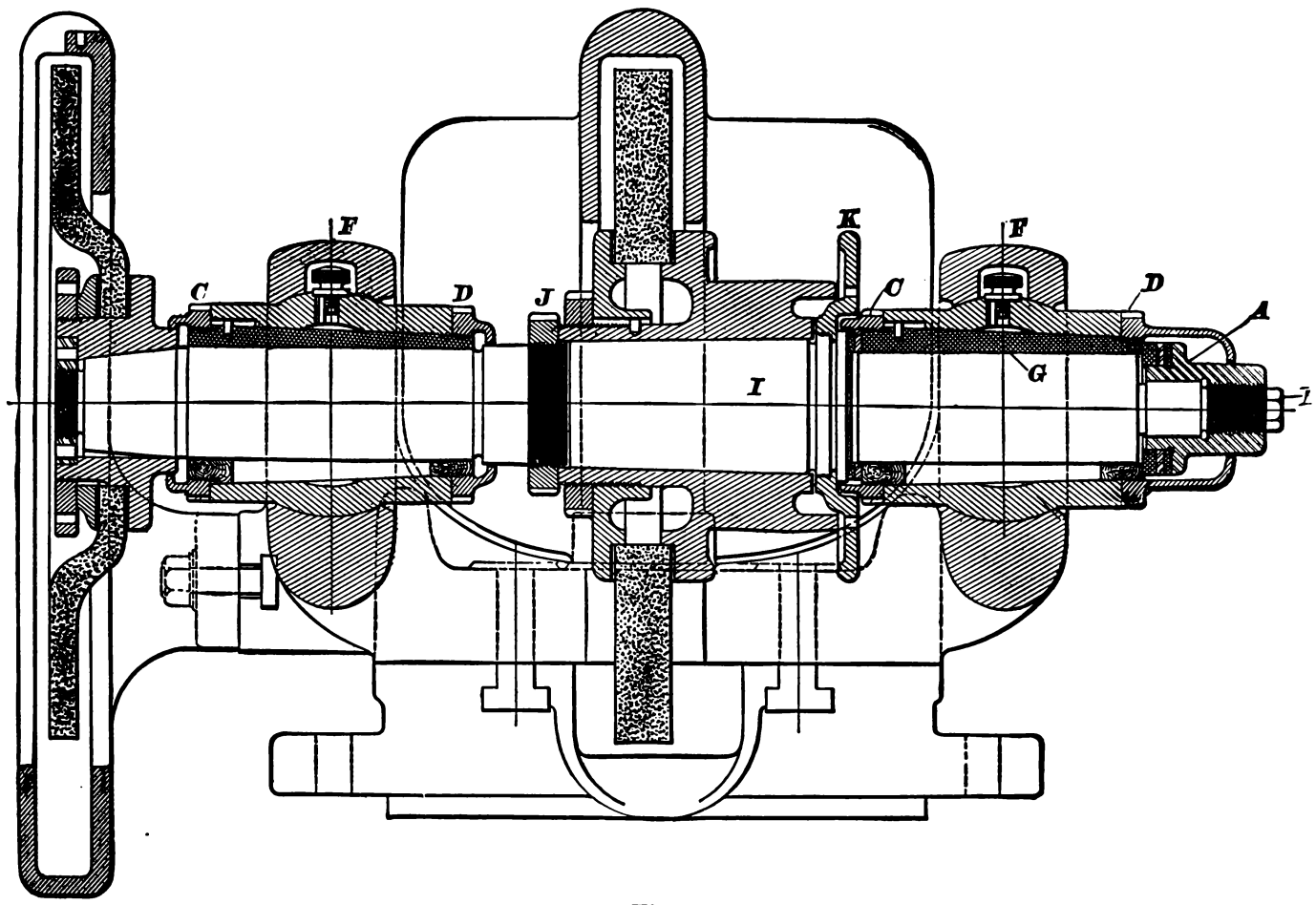

Fig. 7.

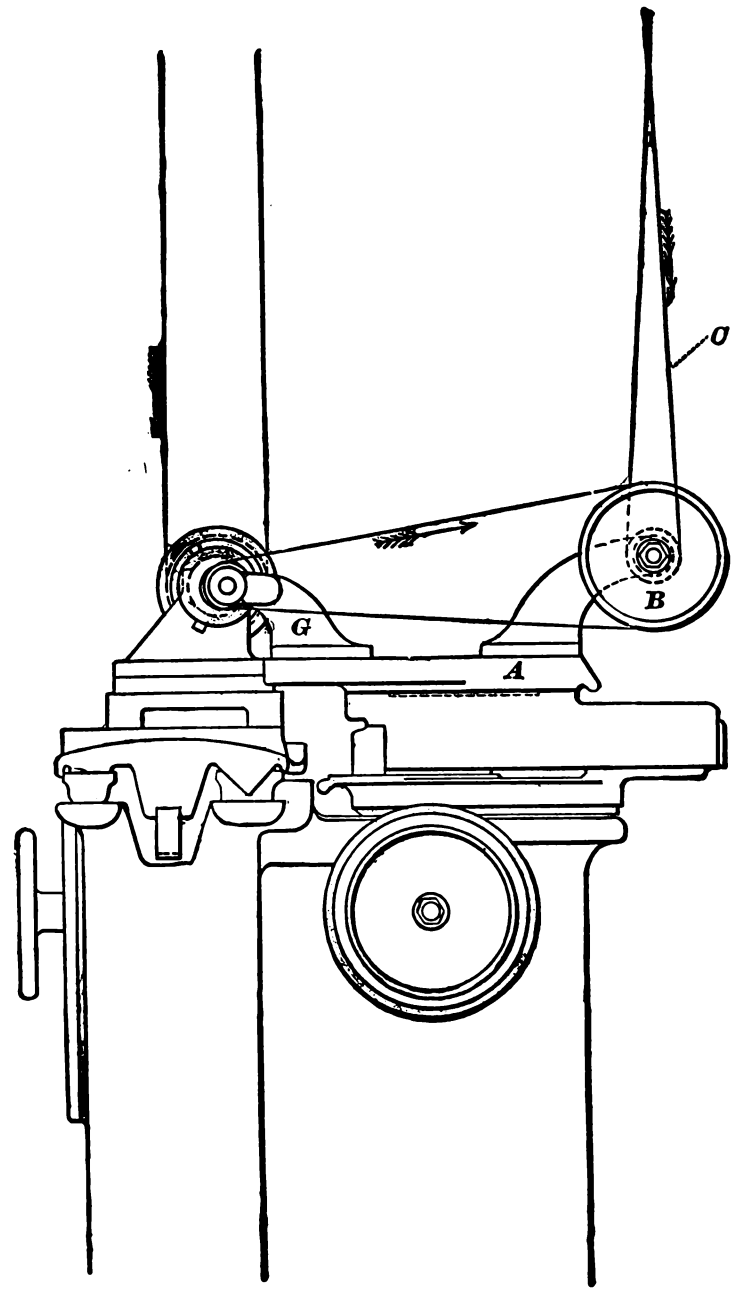

Fig. 8.

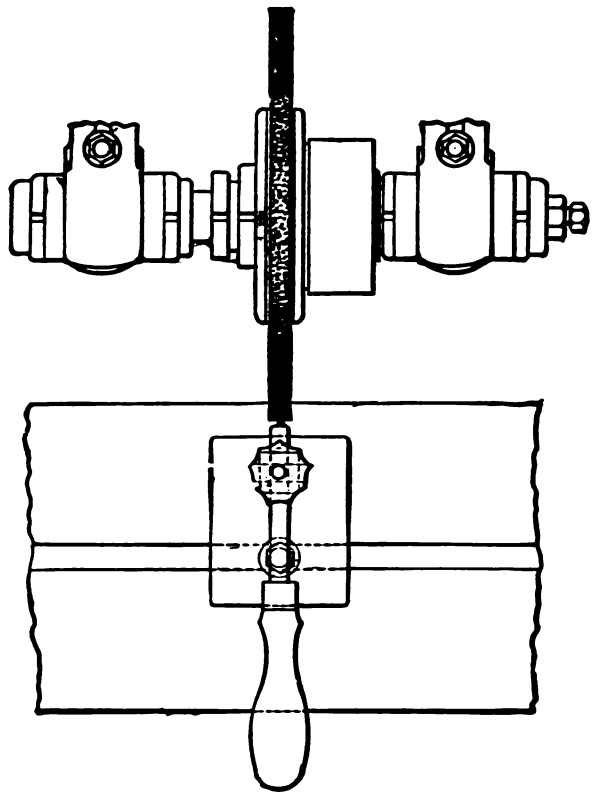

Fig. 9.

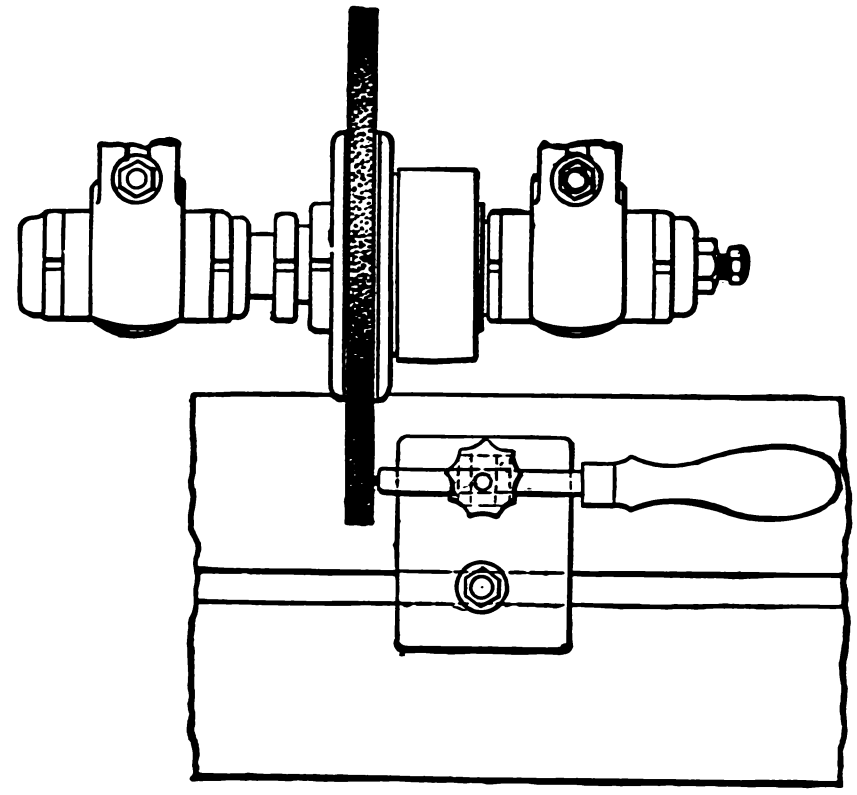

Fig. 10.

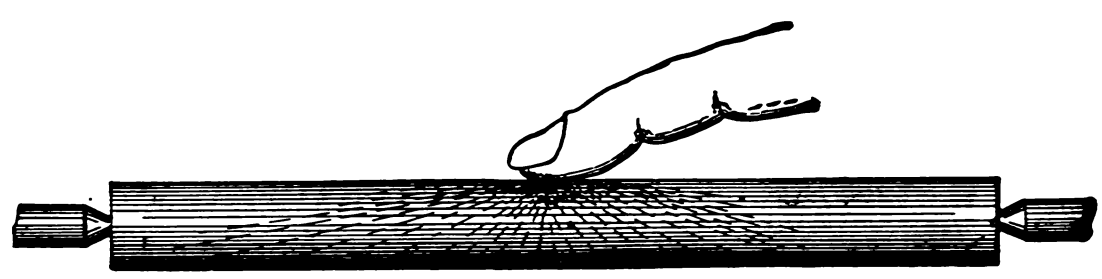

Fig. 11.

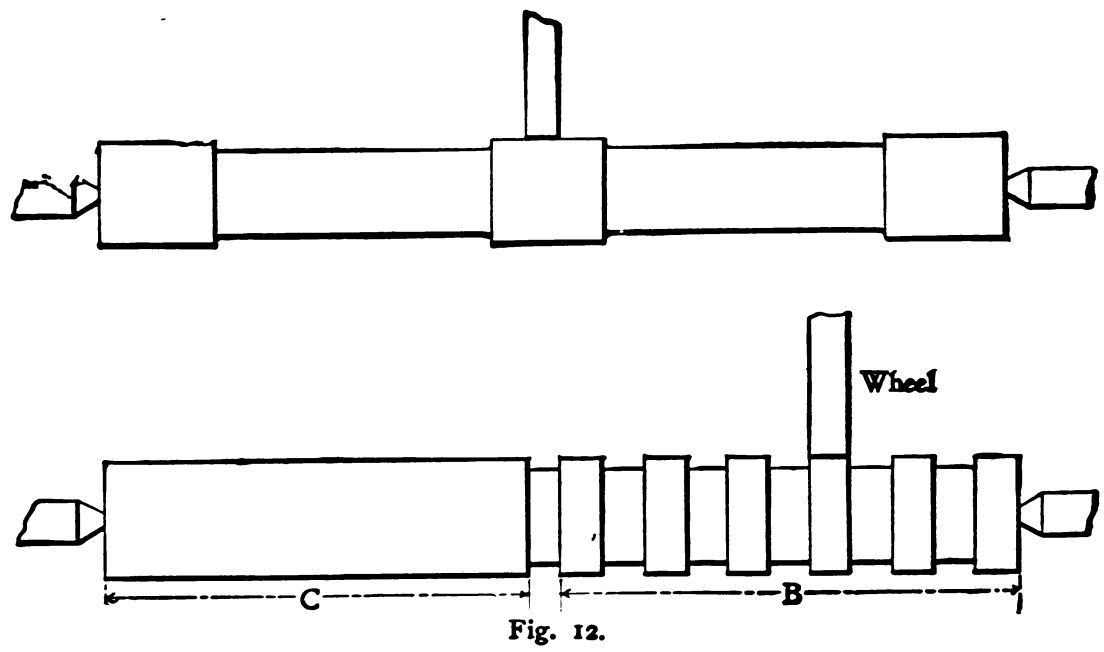

Fig. 12.

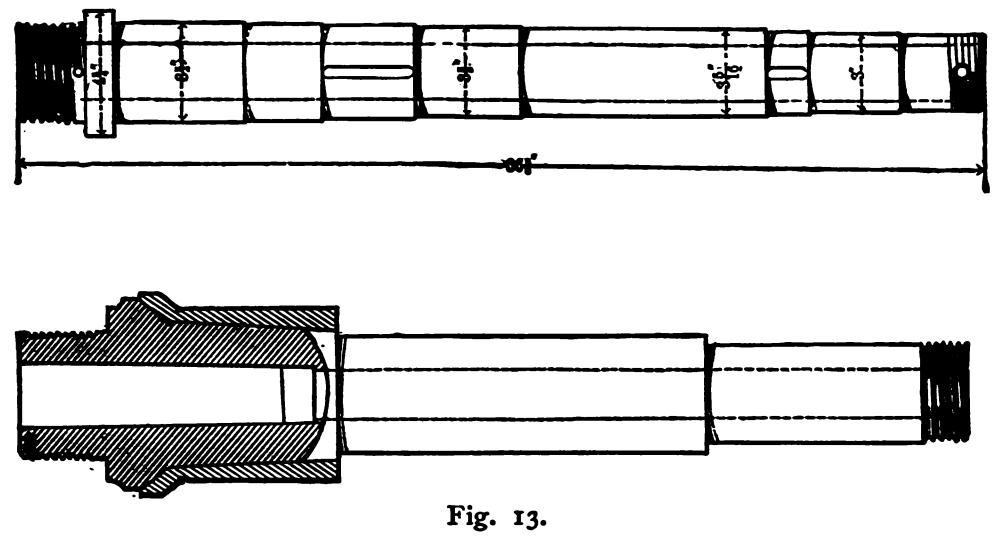

Fig. 13.

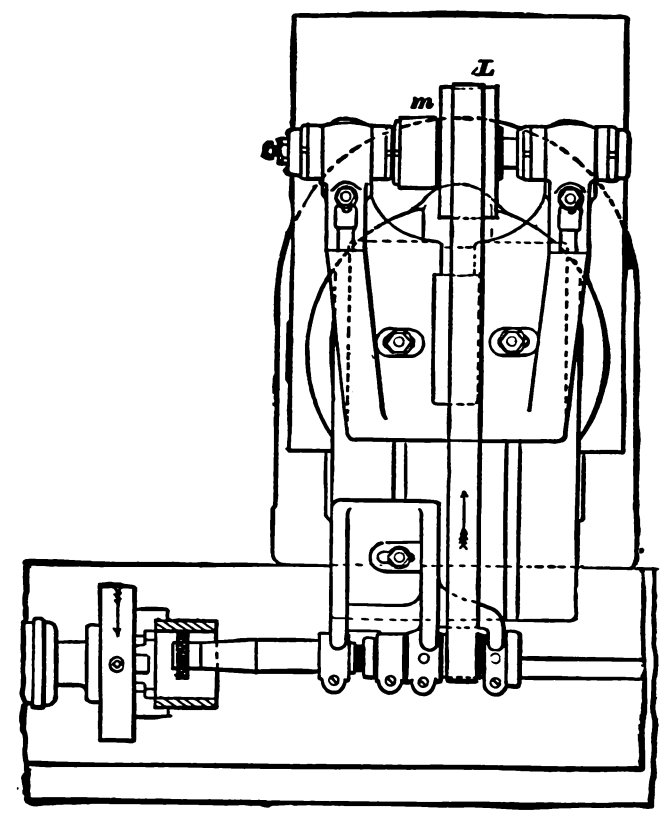

Fig. 14.

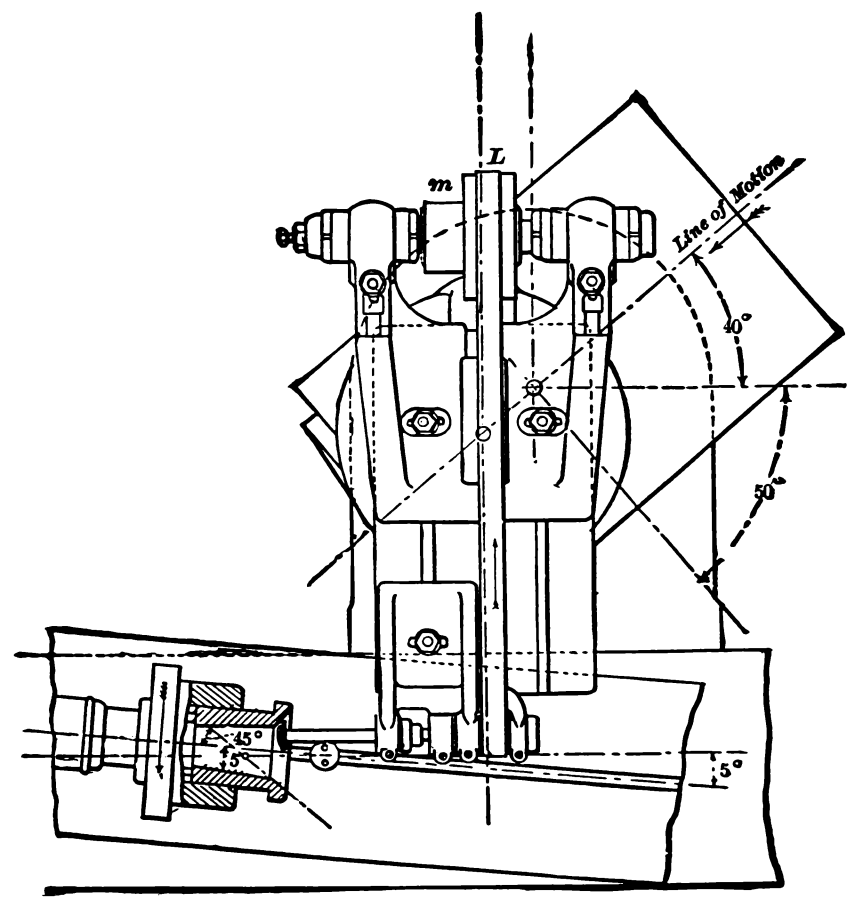

Fig. 15.

at different points. This method of using the rest is particularly advantageous in grinding work that is apt to be large midway between the ends. Slender work, as a rule, until it becomes approximately cylindrical, requires a very coarse feed when the follow rest is used. For long slender work the *follow rest* is the best; remaining, as it does, at a fixed distance from the wheel, it serves to size the work, and enables work to be ground straight

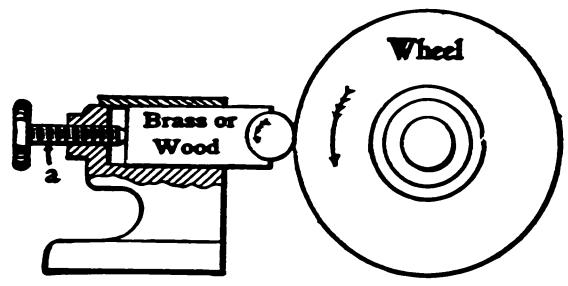

Fig. 17.

that would otherwise be forced from the wheel and made to "chatter."

The sag of a bar sometimes causes it to grind large in the centre. This is something over which the machine can have no control, and the operator must help it by manipulating the follow rest, giving it sufficient pressure to hold the work against the wheel at that point. A small difference in size between the centre and the ends of work is often caused by the work being forced

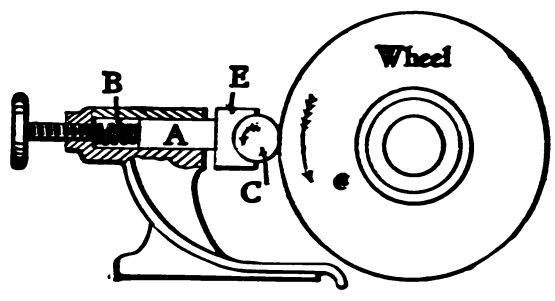

Fig. 18.

away from the wheel by its cut when near the centre, thus necessitating the use of a rest even though no vibration is possible.

The back rest is used both with and without a spring. When used with a spring, as shown in Fig. 18, it is commonly known as a *spring rest*, and is used in grinding taper work. The rest remains in a fixed position relative to the work; and, by the action of the spring, the shoe will always press against the surface of the work. If the rest was rigid, similar to the follow rest, Fig. 17,

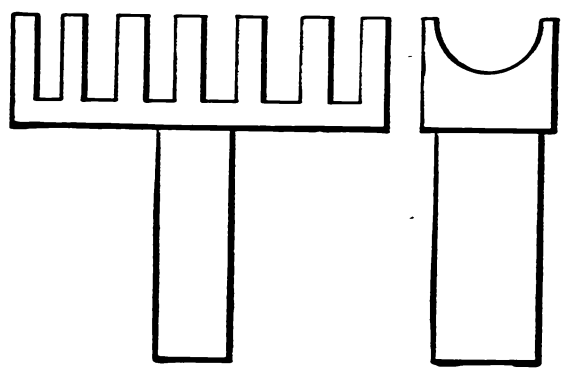

Fig. 19.

and moved against the work by the screw *a* as shown, it would fail to reach the work as soon as the wheel had cut away the surface, thus causing a "chatter" until it could be forced against the new diameter, which would, in any case, be a very difficult operation without changing the size of the cut. There are also certain imperfections, which might be left by the lathe, that would prevent round grinding if this rest was forced against the work as the follow rest is. Fig 18, shows a section through a spring rest. The shoe A is of brass or other soft metal, the end E being made to approximately fit the work to be ground. The spring B keeps the shoe in close contact with the work, and also allows the rest to conform to variations in the size of the work. The work, when revolving, tends to climb on the shoe, thus keeping the pressure upon the surface C, and supporting the work on the underside. The shoes of both spring and follow rests should be of brass, soft metal, or wood, thus allowing the revolving work to wear the surface away sufficiently for it to fit the constantly varying size of the work. As a rule, brass or soft metal is best, but wood is used when metal would scratch the surface of the work. The shoe should have sufficient surface to last well, but not enough to retard the wear mentioned.

The shoe of a spring rest should move freely in the slide, and be of sufficient mass to absorb slight vibrations. As shown in Fig. 18, the spring holds the shoe in contact with the work, and the pressure is regulated by the thumb screw. In fitting a shoe

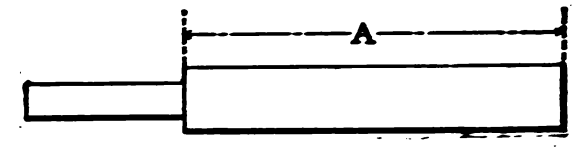

Fig. 20.

of this description it should first bear well on the underside of the work; the wear will quickly fit it to the work, and the shoe will always have a firm bearing underneath. It should never be made of hard material or of V-shape.

It is not always necessary for the shoe of a spring rest to bear entirely around one-half of the circumference of the work. A shoe of sufficient mass will prevent vibration; and, as it is of soft material, will soon wear to fit the varying circumference.

Fig. 19 shows a form of shoe which is particularly well adapted for work requiring unusual steadiness; a shoe similar to this is shown in Fig. 16, in position on a machine which is fitted for grinding large numbers of pieces similar to that shown in Fig. 20. In this case the follow rest could not be used; as the pieces were to be ground to a slight taper. If only a small number were to be ground no rest would be necessary; but when both economy and accuracy are required, and deep and rapid cuts must be taken, a proper rest must be used in order that the

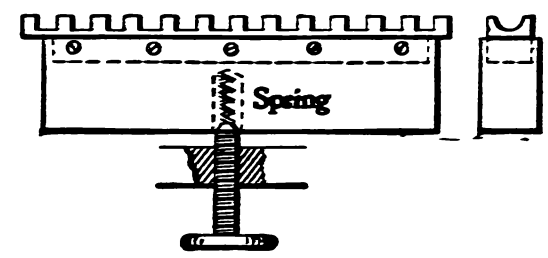

Fig. 21.

work be kept steady under the cut, as, under these conditions, the wheel will more readily maintain duplicate sizes.

Fig. 21 shows a form of shoe for grinding tubing. Fig. 13 shows an example of work done on the No. 2 universal grinding machine; Fig. 14, the internal grinding fixture as arranged for plain internal grinding; and Fig. 15, as arranged for grinding taper holes.

Fig. 680, Plate LII. (from *The American Machinist*), shows a special chuck for grinding the faces of thin disks, such as thin milling cutters, which could not be held true by their bores alone. The object of the device is to hold the cutter by its bore and then draw it back against the face of the chuck, which, therefore, sets it true on the faces. The construction of the chuck is as follows: The hub screws upon the lathe like an ordinary face plate, and has a slot running diametrically through it. Upon its circumference is a knurled or milled nut C, which is threaded internally to receive the threaded wings of the bush B. A collar behind C holds it in place upon the hub. To admit piece B the front of the chuck is bored out, and after B is inserted and its threaded wings are engaged in the ring nut C a collar is fitted over it and into the counter-bore to prevent B from having end motion unless C is revolved. D is a split bushing that fits into B, its stem fitting the bore of the disk, or cutter to be ground: the enlarged end of D is

countersunk to receive the head of the screw E, whose stem passes through D and threads at its end into B, so that when E is screwed up its head expands D and causes it to grip the bore of the disc or cutter to be ground. After E is screwed up the ring nut C is revolved, drawing B within the chuck and therefore bringing the inside face of the disc or cutter against the face of the chuck or face plate, and truing it upon the bushing D. All that is necessary therefore in using the chuck is to employ a bushing of the necessary diameter for the bore of the cutter, insert it in B, then screw up the screw E and then revolve the ring nut C until the work is brought to bear evenly and fair against the face of the chuck, and to insure this it is best not to screw E very tightly up until after the ring nut C has been operated and brought the work up fair against the chuck face.

Fig. 681 (Plate LII.) represents the J. Morton Poole calendar roll grinding lathe, which has attained pre-eminence both in Europe and the United States from the great accuracy and fine finish of the work it produces.

In all other machine tools, surfaces are made true either by guiding the tool to the work or the work to the tool, and, in either case, guideways and slides are employed to determine the line of motion of the tool or the work, as the case may be. These guideways and slides are usually carried by a framing really independent of the work, so that the cutting depends entirely upon the truth or straightness of the guideways, and is not determined by the truth, straightness, or parallelism of the work itself. As a result, the surface produced depends for its truth upon the truth of the tool-guiding ways. In the Poole lathe, however, while guideways are necessarily employed to guide the emery wheels in as straight a line as is possible, by means of such guides, the roll itself is employed as a corrective agent to eliminate whatever errors may exist in the guide. The rolls come to this machine turned (in the lathe Fig. 730), and with their journals ground true (on dead centres).

Fig. 681 represents a perspective view of the machine, as a whole. It consists of a driving head, answering to the headstock of an ordinary lathe. B, B, are bearings in which the rolls are revolved to be ground. C is a carriage answering to the carriage of an ordinary lathe, but seated in sunken V-guideways, corresponding to those on an ordinary iron planing machine. Referring to Fig. 682, F is a swing-frame suspended by four links at G, H, I, J, which are upon shafts having at their ends knife edges resting in small V-grooves on the top surface of standards S, which are fixed to carriage C. The frame F being thus suspended and being in no way fixed to C, it may be swung back and forth crosswise of the latter, the links at G, H, I, J, swinging as pendulums. At the top of F are two slide rests A, A, one on each end, carrying emery or corundum wheels W; and the roll R, which rests in the bearings B, rotates between these emery wheels. The carriage C is fed along the bed as an ordinary lathe carriage, and the emery wheels are revolved from an overhead countershaft. Now, it will be found that from this form of construction the surface of the roll, when ground true, serves as a guide to determine the line of motion of the emery wheels, and that the emery wheels may be compared to a pair of grinding calipers that will operate on such part of the roll length as may be of larger diameter than the distance apart of the perimeters of the emery wheels, and escape such parts in the roll length as may be of less diameter than the width apart of those perimeters; hence parallellism in the roll is inevitable, because it is governed solely by the width *apart* of the wheel perimeters, which remain the same, while the wheels traverse the roll, except in so far as it may be affected by wear of enemy-wheel diameters in one traverse along the roll.

Suppose we have a roll R (Fig. 683, Plate LIII.), placed in position and slowly revolved, and that the carriage C is fed along by feed screw E, then the line of motion of the emery wheels will be parallel to the axis of the roll, provided, of course, that the bearings B (Figs. 681 and 687) are set parallel to the V-guideways in the bed, and that these guideways are straight and parallel. But the line of travel of the emery wheels is not guided by the Vs except in so far as concerns their height from those Vs, because the swing-frame is quite free to swing either to the right or to the left, as the case may be. Its natural tendency is, from its weight, to swing into its lowest position, and this it will obviously do unless some pressure is put on it in a direction tending to swing it. Suppose, then, that instead of the roll running true, it runs eccentrically, or out of true, as it is termed, as shown in Fig. 683, when the high side meets the left-hand wheel it will push against it, causing the carriage C to swing to the left and to slightly rise. The pressure thus induced between the emery wheel and the roll causes the roll surface to be ground, and the grinding will continue until the roll has permitted the swing-frame to swing back to its lowest and normal position. When the high side of the roll meets the right-hand emery wheel it will bear against it, causing the swing-frame to move to the right, and the pressure between the wheel and the roll will again cause the high side of the latter to be reduced by grinding. This action will continue so long as the roll runs out of true, but when it runs true both emery wheels will operate, grinding it to a diameter equal to the distance between the emery-wheel perimeters, which are, of course, adjusted by the slide rests A, A. If the roll is out of true in the same direction and to the same amount throughout its length, the emery wheel will act on an equal area (for equal lengths of roll) throughout the roll length; but the roll may be out in one direction at one part and in another at some other part of the length; still the emery wheel will only act on the high side, no matter where that high side may be or how often it may change in location as the carriage and wheels traverse along the roll. Now, the roll does not run true until its circumference is equidistant at every point of its surface from the axis on which the roll revolves, and obviously when it does run true its circumference is parallel to the axis of revolution of the roll, because this axis is the line which determines whether the roll runs true or not, and therefore the swing-frame is actually guided by the axis of revolution of the roll, and will therefore move parallel to it.

It is obvious that if by any means the swinging of frame F is slightly resisted, as by a plate between it and C, with a spring to set up the plate against F, then the emery wheels will be capacitated to take a deeper cut than if the frame swing freely, this plan being adopted until such time as the roll is ground true, when both wheels will act continuously and simultaneously, and F may swing freely.

A screw may be used to set up the spring and plate when they are required to act.

Suppose now that the roll was not set exactly level with the V-guideways of the bed, there being a slight error in the adjustment of the roll journals in the bearings on B, and the emery wheels would vary in height with relation to the height of the roll axis, and theoretically they would grind the roll of larger diameter at one end than at the other.

This, however, is a theoretical, rather than a practical point, as may be perceived from Fig. 684, in which R is a part of a section of a roll, and W a part of a section of a wheel. Now, assuming that the V-ways were as much as even a sixteenth out of true, so far as height is concerned, all the influence of the variation in height is shown by the second line of emery-wheel perimeter, shown in the figure, the two arcs being drawn from centres, one of which is $\frac{1}{16}$th inch higher than the other. It is plain, then, that with the ordinary errors found in such V-guideways, which will not be found to exceed $\frac{1}{30}$th of an inch, no practical effect will be produced upon the roll. Again, if one V is not in line with the other, no practical effect is produced, because if the carriage C were inclined at an angle, though the plane of rotation of the emery wheel would be varied, its face would yet be parallel to the roll axis. If the Vs were to vary in their widths apart (the angles of the Vs being 45° apart), all the effect it would have would be to raise or lower the carriage C to one-half the amount the Vs were in error. It will be thus perceived that correctness of the roll both for parallelism and cylindricity is obtained independent of absolute truth in the V-guides.

Referring now to some of the details of construction of the lathe, the slide rest A, Fig. 683, is bored to receive sockets D D, Fig. 685, and is provided with caps, so that the sockets may be firmly

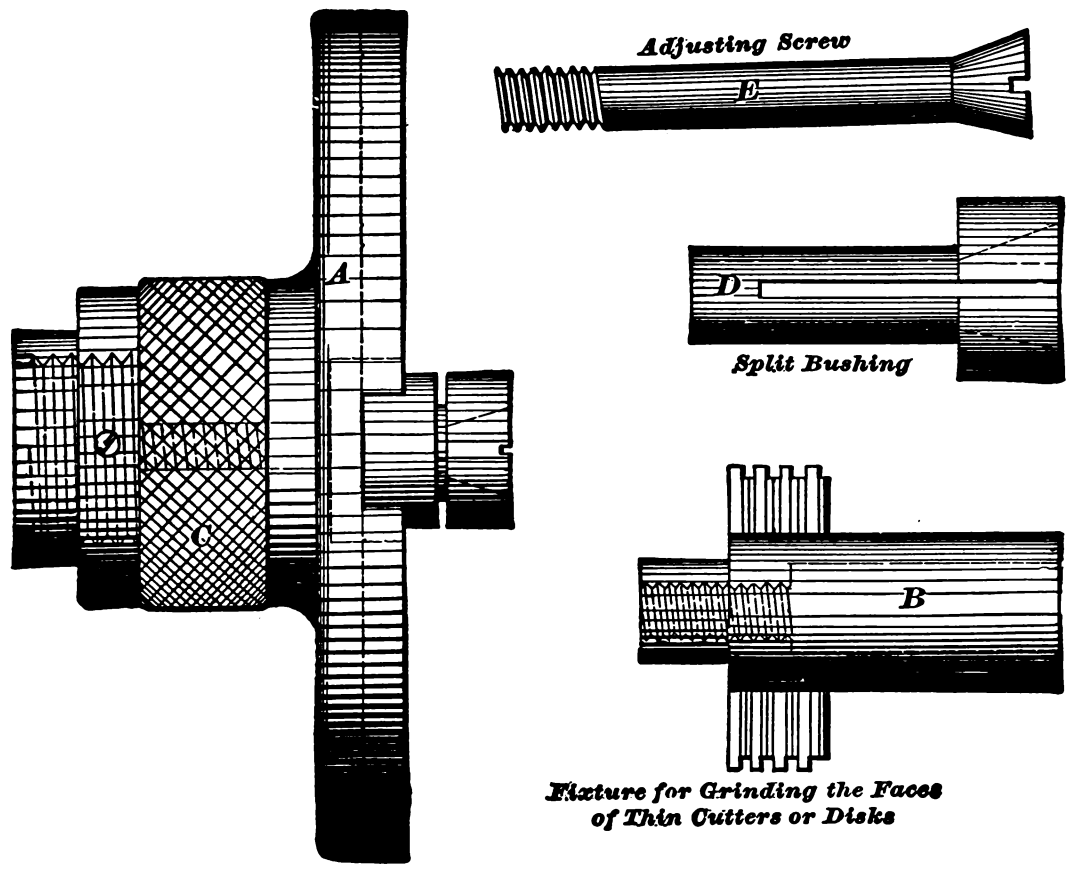

Fig. 680.

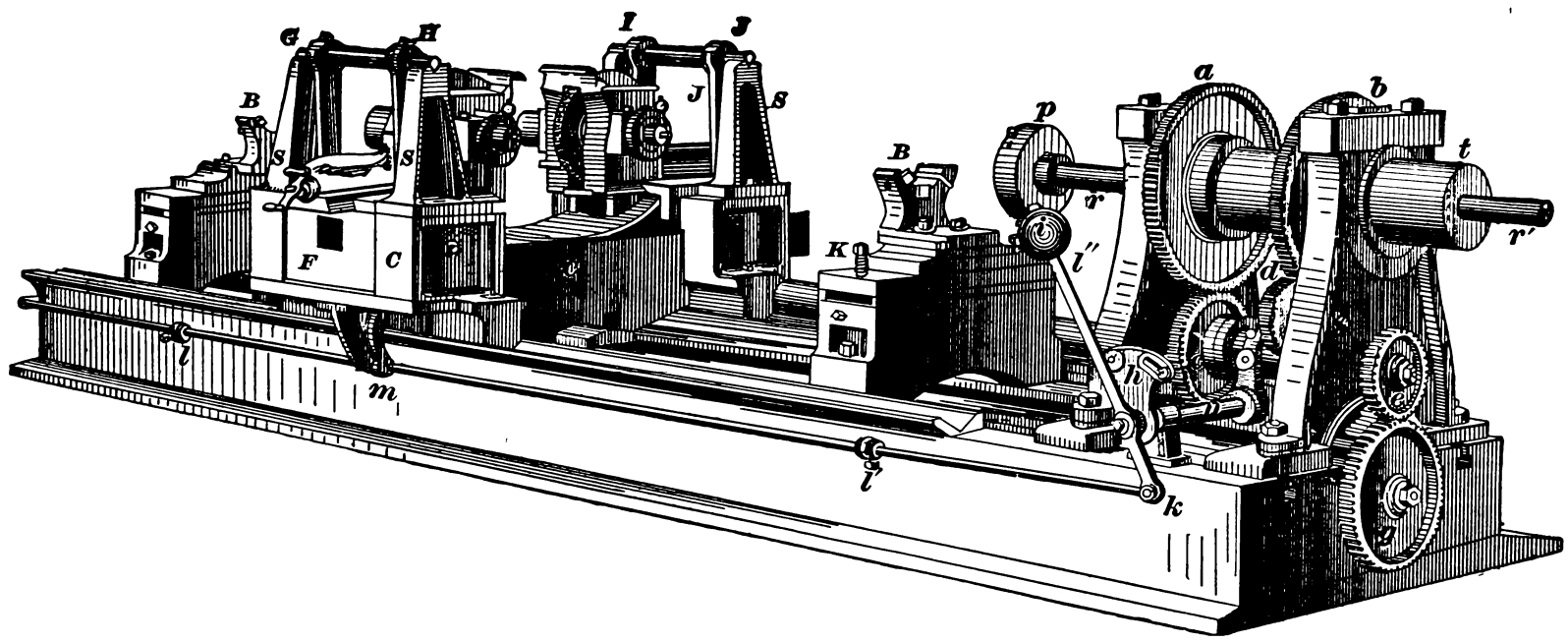

Fig. 681.

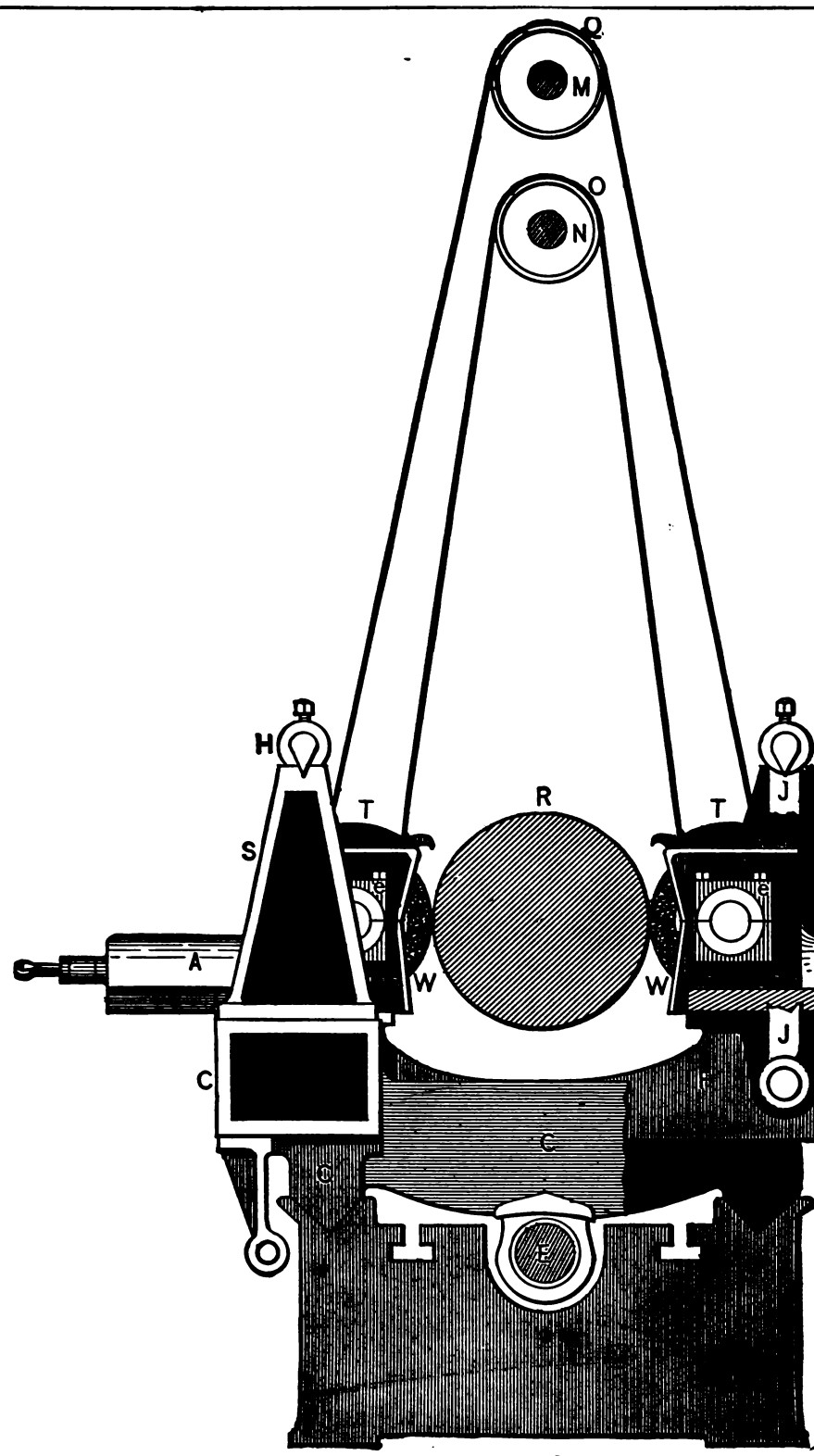

Fig. 682.

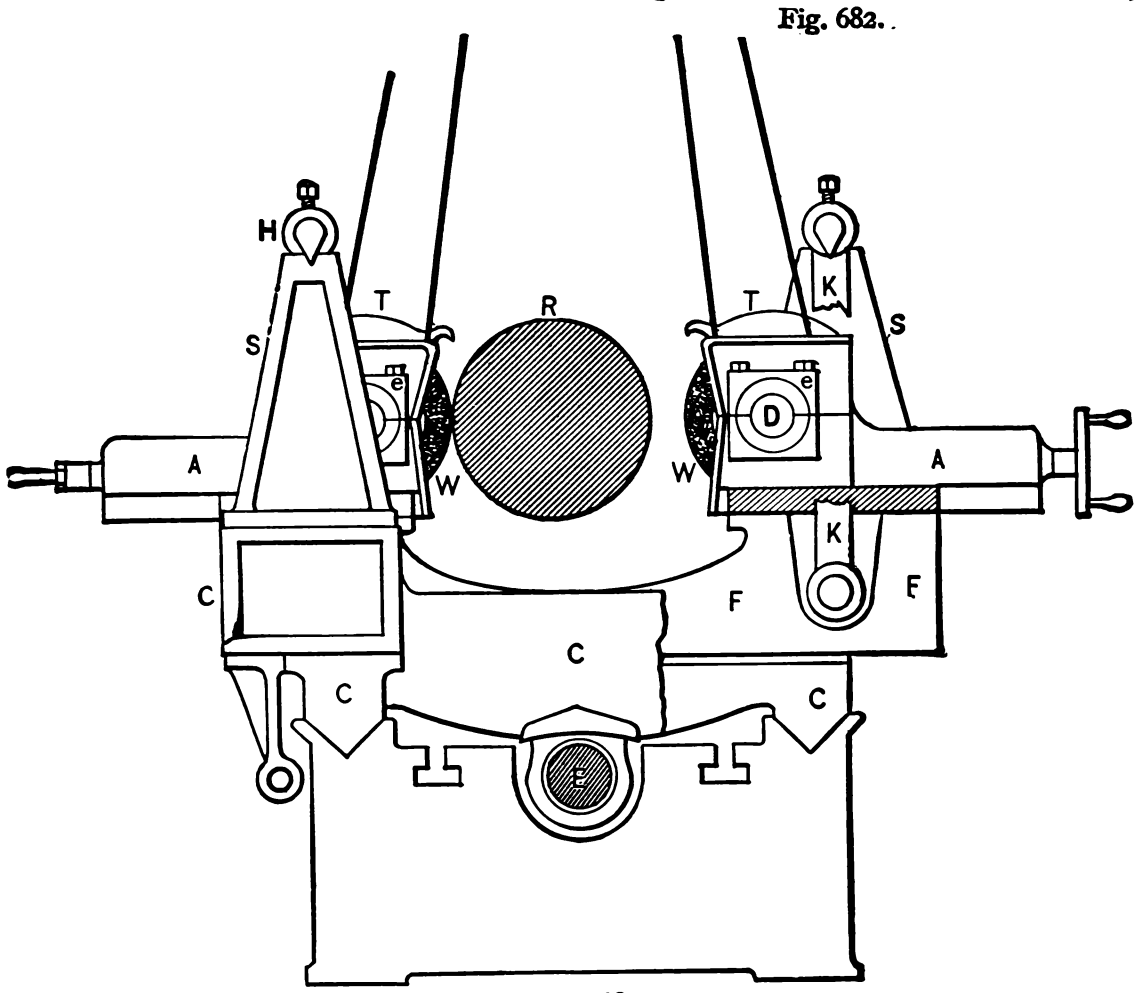

Fig. 683.

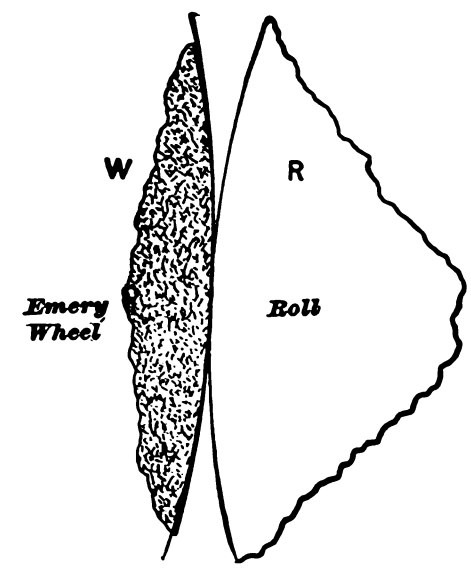

Fig. 684.

gripped and held axially true one with the other. The socket-bores are taper, to receive the taper ends of the arbor *x*, and are provided with oil pockets at each end. There is a driving pulley on each side of the emery-wheel, and equal belt-speed is obtained as follows: Two belt driving drums M N are employed, and each belt passes over both, as in Figs. 683 and 685, and down around the pulleys P. The diameter of the drum N is less than the diameter of the drum M by twice the thickness of the belt, thus equalizing inside and outside belt diameters, since they both pass

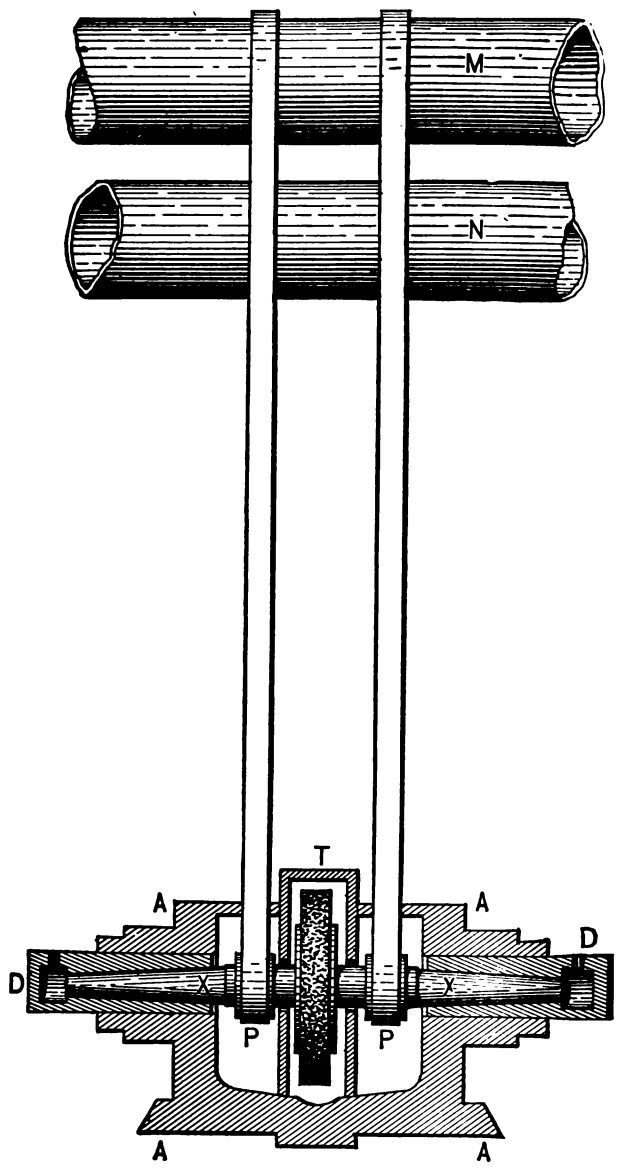

Fig. 685.

over the pulley of the emery-arbor. The piece T is a guard to catch the water from the emery-wheels, and is hinged at the back so that the top is a lid that may be swung back out of the way when necessary.

The method of securing the emery-wheels is shown in Fig. 686. Two flanges Z (made in halves) are let into the wheel, and clamp the wheel by means of the screws shown. The bore of these flanges Z is larger than the diameter of pulleys P, so that the emery-wheels may be changed on the arbor without removing

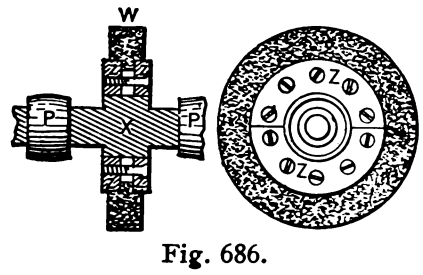

Fig. 686.

the pulley. Fig. 687 represents an end view of the bearings B for the roll to revolve in, being provided with three pieces, the two side ones of which are adjustable by the set-screws, so as to facilitate setting the roll parallel with the bed of the lathe. The height is adjusted by means of screws K, K, which may also be used in grinding a roll of large diameter at the middle of its length, by occasionally raising the roll as the carriage C proceeds along the roll (the principle of this action is hereafter explained with reference to turning tapers on ordinary lathe work). When the wheels have traversed half the length of the roll, the screws K are operated to lower it again, it being found that the effect of a slight operating of the screws K is so small that the workman's judgment may be relied upon to use them to give to a roll with practical accuracy any required degree of enlarged diameter at

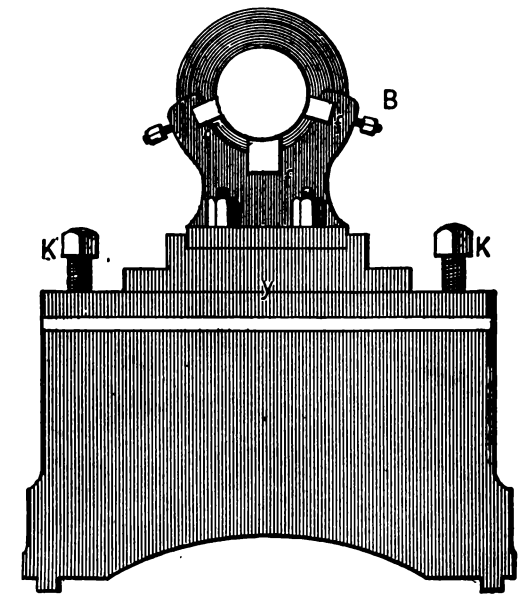

Fig. 687.

the middle of its length with sufficient accuracy for all practical purposes.

There are, however, other advantages of this system, which may be noted as follows. When a single emery-wheel is used there is evidently twice the amount of wear to take a given amount of metal off (per traverse) that there is when two wheels are used, and furthermore the reduction of every wheel diameter per traverse is evidently twice as great with one wheel as it is with two. From some experiments made by Messrs. Morton Poole, it was found

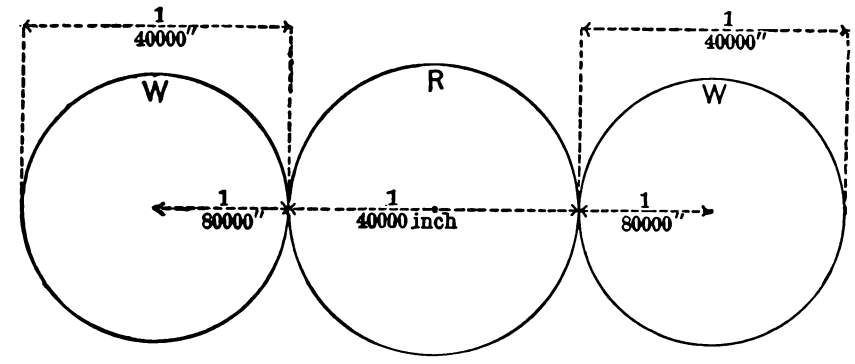

Fig. 688.

that using a pair of 10-inch emery-wheels it would take 40,000 wheel traverses along an average sized calender roll, to reduce its diameter an inch, hence the amount of error due to the reduction of the emery-wheel diameters, per traverse, may be stated as $\frac{1}{40000}$ of an inch per traverse, for the two wheels.

Now referring to Fig. 688, let R represent a roll and W W the two emery-wheels.

Suppose the wheels being at the end of a traverse, the roll is $\frac{1}{40000}$ inch larger at that end on account of the wear of the emery-

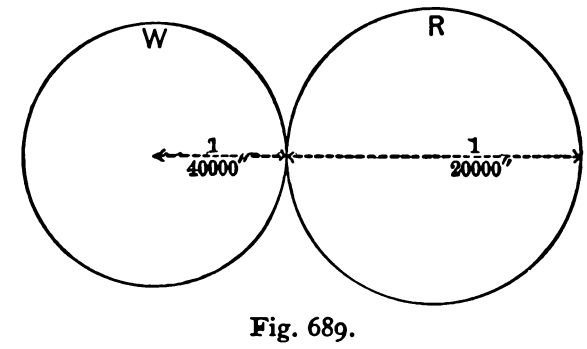

Fig. 689.

wheels, then each wheel will have worn $\frac{1}{40000}$ inch diameter or $\frac{1}{80000}$ inch radius, hence the increase of roll diameter is equal to the wear of wheel diameter.

Now, suppose that one wheel be used as in Fig. 689, and its reduction of *diameter* will be equal to that of the two wheels

added together, or $\frac{1}{20000}$ inch, this would be $\frac{1}{40000}$ in the radius of the wheel, producing a difference of $\frac{1}{20000}$ difference in the diameter of the wheel.

There is another advantage, however, in that a finer cut can be easier put on in the Poole system, because if a feed be put on of $\frac{1}{100}$th inch, the roll is only reduced $\frac{1}{100}$th inch in diameter, but if the same amount of feed be put on with a single wheel, it will reduce the roll $\frac{1}{50}$th inch, hence for a given amount of feed or movement of emery-wheel towards the roll axis, the amount of cut taken is only half as much as it would be if a single wheel is used. This enables a minimum of feed to be put on the wheel, wear being obviously reduced in proportion as the feed is lighter and the duty therefore diminished.

The method of driving the roll is as follows: Shaft *t*, Fig. 681, runs in bearings in the head, and spindle *r r'* passes through, and is driven by shaft *t*. A driving pulley is fitted on the spindle at end *r'*, at the other end is a driving chuck *p* for driving the roll through the medium of a ***wabbler***, whose construction will be shown presently. Spindle *r* may be adjusted endwise in *t*, so that it may be adjusted to suit different lengths of rolls without moving the bearing blocks B.

The wabbler is driven by *p* and receives the end of the roll to be ground, as shown in Fig. 690, the end of the roll being a taper square and fitting very loosely in a square taper hole in the end of the wabbler; similarly *p* may have a taper square hole loosely fitting the squared end of the wabbler. The looseness of fit enables the wabbler to drive the roll without putting any strain on it tending to lift or twist it in its bearings in block B, and obviates the necessity for the axis of the rolls to be dead in line with the axis of *r r'*. Various lengths of wabblers may be used to suit the lengths of roll and avoid moving blocks B, and it is obvious also that if the ends of the roll are round instead of square, two set-screws may be used to hold the roll end being set diametrically

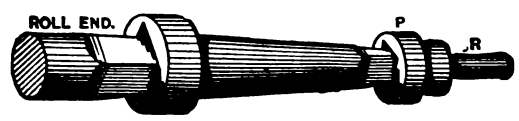

Fig. 690.

opposite, and if set screws are used in *p* to drive the wabbler they should be two in number, set diametrically opposite, and at a right angle to the two in the wabbler, so that it may act as a universal joint.

The method of automatically traversing the carriage C is as follows: Referring to Fig. 681, two gears *a*, *b* are fast upon shaft *t*, gear *a* drives *c* which is on the same shaft as *e*, gear *b* drives *d* which drives a gear not seen in the cut, but which we will term *x*, it being on the same shaft as *c* and *e*. Now if *e* is driven through the medium of *a c*, it runs in one direction, while if it is driven through the medium of *b d x*, it revolves *e* in the opposite direction, and since *e* drives *g* and *g* is on the end of the feed screw (E, Fig. 682) the direction of motion of carriage C is determined by which of the wheels *a* or *b* drives *e*. At *h* is a stand affording journal bearing to a shaft *n*, whose end engages a clutch upon the shaft of wheels *c*, *x* and *e*. On the outer end of shaft *n* is ball lever *l''*, whose lower end is attached to a rod *k*, upon which are stops *l l'* adjustable along rod *k* by means of set-screws. At *m* is a bracket embracing rod *k*.

Now suppose carriage C to traverse to the left, and *m* will meet *l* moving rod *k* to the left, the ball *i* will move up to a vertical position and then fall over to the right, causing the clutch to disengage from gear *c* and engage with the unseen gear *x*, reversing the motion of *e* and of *g*, and therefore of carriage C, which moves to the right until *m* meets *l'* and pushes it to the right, causing *i* to move back to the position it occupies in the engraving, the clutch engaging *c*, which is then the driving wheel for *e*.

SCREW MACHINE.—The screw machine is a special form of lathe in which the work is cut direct from the bar, without the intervention of forging operations, and it follows therefore that the bar must be large enough in diameter to suit the largest diameter of the work, the steps or sections of smaller diameter being turned down from the full size of the bar. The advantages of the screw machine are, that the work requires no centring since it is held in a chuck, that forging operations are dispensed with, that any number of pieces may be made of uniform dimensions without any measuring operations save those necessary when adjusting the tool for the first piece, and that it does not require skilled labor to operate the machine after the tools are once set.

The capacity of the screw machine is, therefore, many times greater than that of a lathe, while the diameters and lengths of the various parts of the work will be more uniform than can be done by caliper measurements, being in this case varied by the wear of the cutting edges of the tools only, which eliminates the errors liable to independent caliper measurement. Hollow work, as nuts and washers, may be equally operated on being driven by a mandril held in the chuck.

Fig. 691 represents Brown and Sharpe's Number I screw machine, which is designed for the rapid production of small work.

Three separate tool-holding devices may be employed: first, cutting tools may be placed in the holes shown to pierce (horizontally) the circular head F; second, tools may be fixed in the tool posts shown in the double slide rest, which has two slides (one in the front and one at the back of the line of centres); and third, tools may be placed in what may be termed the screw-cutting slide-rest J.

F is a head pierced horizontally with seven holes, and is capable of rotation upon L; when certain mechanism is operated L slides on D and the mechanism of these three parts is arranged to operate as follows. The lever arms K traverse L in D. When K is operated from right to left, L advances towards the live spindle until arrested at some particular point by a suitable stop motion, this stop motion being capable of adjustment so as to allow F to approach the live spindle a distance suitable for the work in hand.

When, however, K is operated from left to right L moves back, and when it has traversed a certain distance, the head F rotates $\frac{1}{7}$ of a rotation, and becomes again locked so far as rotation is concerned. Now the relation between the seven holes in F is such that when F has rotated its $\frac{1}{7}$ rotation, one of the seven holes is in line with the live spindle. Suppose then seven cutting tools to be secured in the holes in F, then K may be operated from right to left, traversing L and F forward, and one of the cutting tools will operate upon the work until L meets the stop; K may then be moved from left to right, L and F will traverse back, then F will rotate $\frac{1}{7}$ rotation and L and F may be traversed by K, and a second tool will operate upon the work, and so on.

The diameter of the work is determined by the distance of the cutting edge of the tool from the line of centres, when such tool is in line with the work, or, in other words, is in position to operate upon the work. The end measurements of the work are secured by placing the cutting edges of the tools the requisite distance out from F, when L is moved forward as far as the stop motion will permit. But it is evident that the length of cut taken along the work, would under these simple conditions vary with the distance of the end of the work from the face of the chuck driving it, but this is obviated as follows:—

The live spindle is made hollow so that the rod of metal, of which the work is to be made, may pass through that spindle. A chuck on the spindle holds the work or releases it in the usual manner. Suppose then the chuck to be open and the bar free to be moved, then there is placed in the hole in F, that is in line with the work, a stop instead of a cutting tool. The end of the work may then, for the first piece turned, be squared up by a tool placed in the slide rest and then released from the chuck and pushed through the live spindle until it abuts against the stop so adjusted and affixed in the hole in F; K may then be operated to act on the work. The first tool may reduce the work to its largest required diameter, the second turn down a plain shoulder, the third may be a die cutting a thread a certain distance up the work, the fourth may be a tool turning a plain part at the beginning of the thread, the fifth may round off the end of the work, and the sixth may be a drill to pierce a hole a certain distance up the end of the work.

Now suppose the work to require its edge at the other end to be chamfered, then there may be placed in the slide rest tool posts a tool to sever the work from the bar out of which it has been

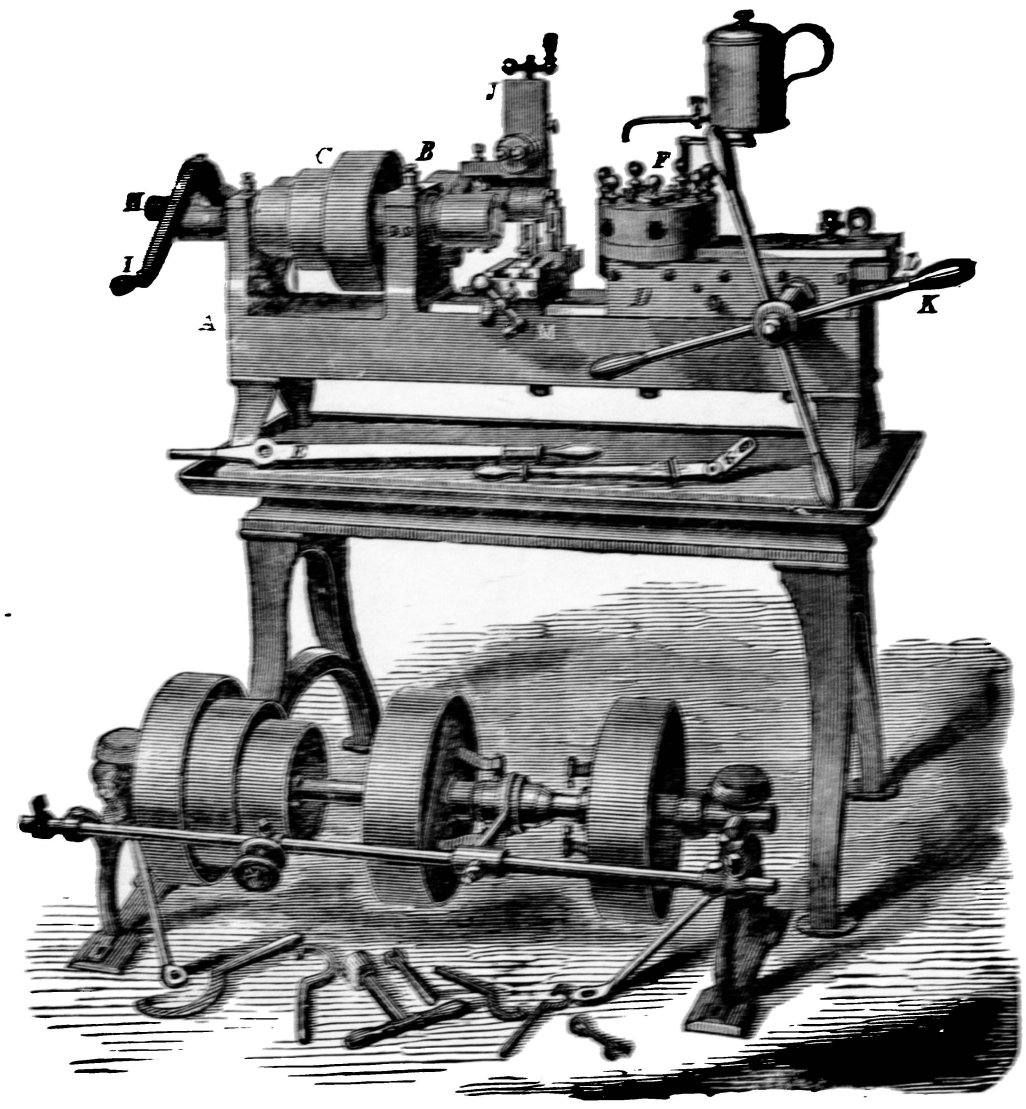

Fig. 691.

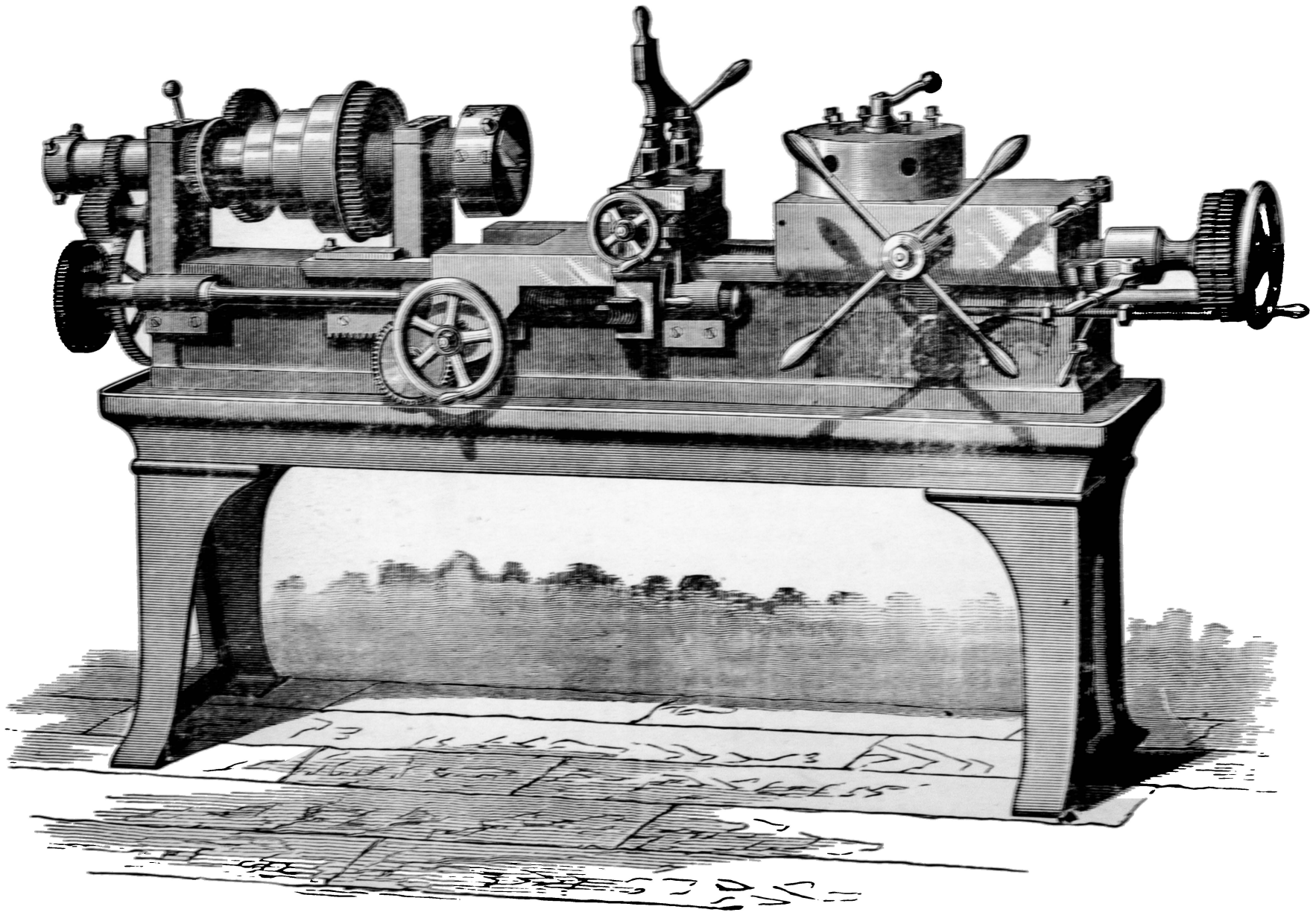

Fig. 692.

made, while the other may be used to chamfer the required edge, or to round it if needs be to any required form.

Work held in the chuck but not formed from a rod may be, of course, operated upon in a similar manner.

In the case, however, of work of large diameter requiring to be threaded, the threading tool may be held and operated differently and more rigidly as follows. I is a lever carrying under its bend and over the projecting end of the live spindle, a segment of a nut whose thread must equal in pitch the pitch of thread to be given to the work. A collar or ring, oftentimes called the leader, having a thread of the same pitch, is then secured upon the live spindle, so as to rotate with it, and have no end motion; when therefore I is depressed, the nut will come into work with the collar or ring, and I will be traversed at a speed proportioned to the pitch of the threads on the collar and nut.

Now I is attached to a shaft having journal bearing (and capable of end motion) at the back of the lathe head, and on this bar is attached the slide rest J, in which the turning or threading

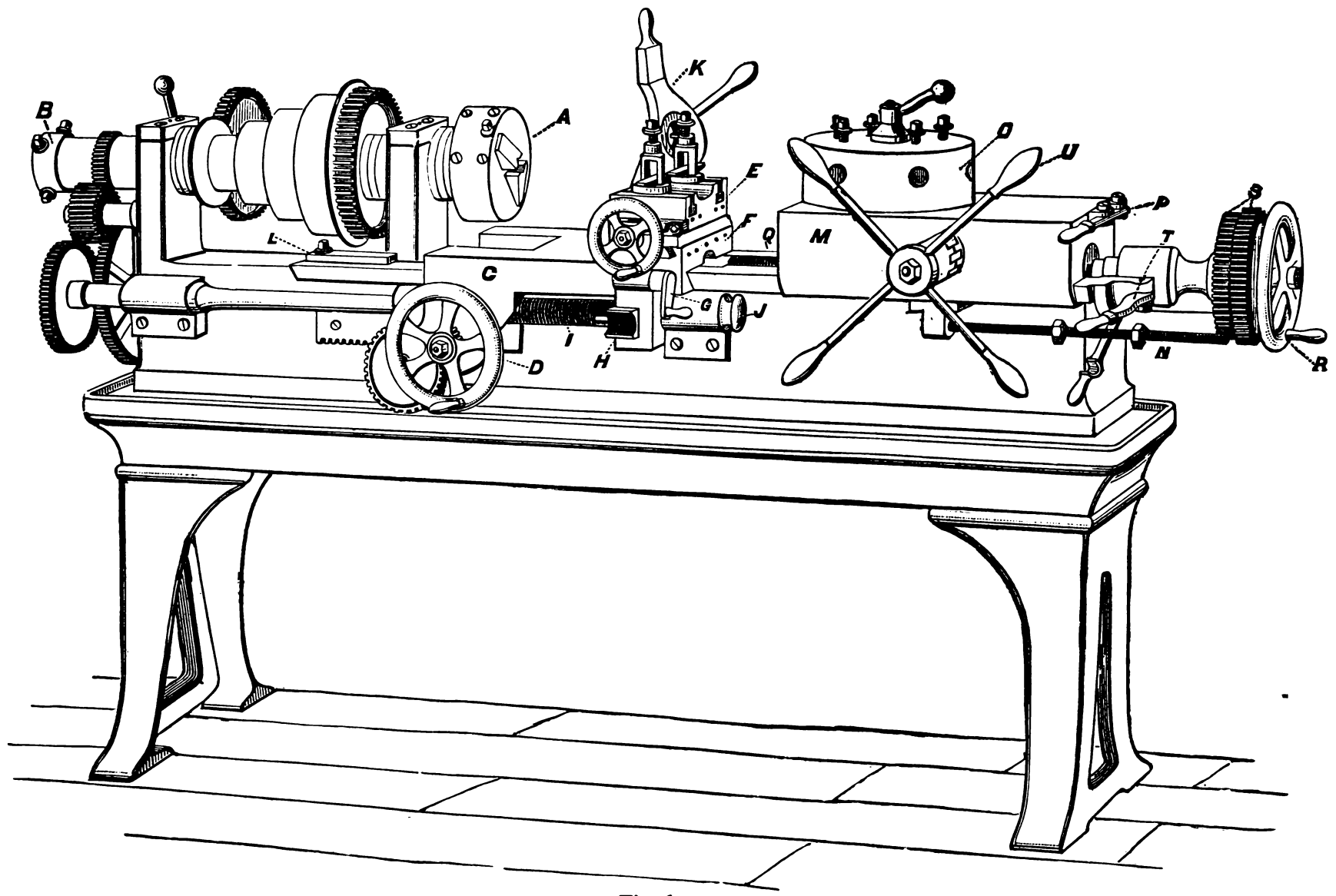

Fig. 693.

tool may be placed. The shaft above referred to having end motion, may be operated (when the nut in the lever I is lifted clear of the collar) laterally by means of the lever I; hence to traverse J to the right, or for the back traverse, I is raised and pulled to the right, I is then lowered, the nut engages with the collar, and the tool is traversed to the cut. The cut is adjusted for diameter by the slide rest, which is provided with an adjustable stop to determine the depth to which the tool shall enter the work.

It is obvious that this part of the machine, may be employed for ordinary turning operations, if the collar be of suitable pitch for the feed.

Figs. 692 and 693 represent a screw machine for general work.

A is a chuck with hardened steel V-shaped jaws. It is fast on the hollow arbor of the machine. B is a steadying chuck on the rear end of the arbor. The arbor has a two and one-sixteenth hole through it and its journals are very large and stiff. It is of steel, and runs in gun-metal boxes. The cone pulley and back gear is of the full proportion and power of an eighteen-inch lathe.

C is an ordinary lathe carriage fitted to slide on the bed, and be operated by hand-wheel D and a rack pinion as usual. Across this carriage slides a tool rest E operated by screw as usual, and having two tool posts, one to the front and one to the rear of the work. This tool rest, instead of sliding directly in the carriage as is the case with lathes, slides on an intermediate slide which fits and slides in the carriage. This intermediate slide is moved in and out, a short distance only, by means of a cam lever G. An apron on the front end of this slide carries the lead screw nut H. When the cam lever is raised it brings the slide outward about half an inch, and the tool rest E comes out with it and at the same time the nut leaves the lead screw. The inward movement of the slide is always to the same point, thus engaging the lead screw and resetting the tool. In cutting threads with a tool in the front tool post the tool is set by moving the tool rest as usual, and at the end of the cut the cam lever serves to quickly withdraw the tool and lead screw nut so that the carriage can be run back. The tool rest is then advanced slightly and the new cut taken. By this means threads are cut without any false motions, and the threads may be cut close up to a shoulder.

I is the lead screw. This screw does not extend, as is usual, to the head of the machine. It is short and is socketed into a shaft which runs to the head of the machine and is driven by gearing as usual. The lead screw is thus a plain shaft with a short, removable, threaded end. The gearing is never changed. Different lead screws are used for different threads, thus permitting threads to be cut without running back. The lead screws are changed in an instant by removing knob J. The lead screw nut H is a sectional nut, double ended, so that each nut will do for two pitches, by turning it end for end in the apron. L is an adjustable stop which determines the position of the carriage in cuttting off, facing, &c. K is an arm pivoted to the rear of the carriage and carrying three open dies like a bolt cutter head. At M is a block sliding or capable of being fed along the bed. N is a gauge screw attached to this block and provided with two nuts. The stop lever shown in the cut turns up to straddle

this screw, and the position of the nuts determines how far each way the block may slide. O is the turret fitted to turn on the block. It has six holes in its rim to receive sundry tools. It can be turned to bring any of these tools into action, and is secured by the lock lever P.

The turret slide is moved quickly by hand, by means of the capstan levers U, which, by an in-and-out motion, also serve to

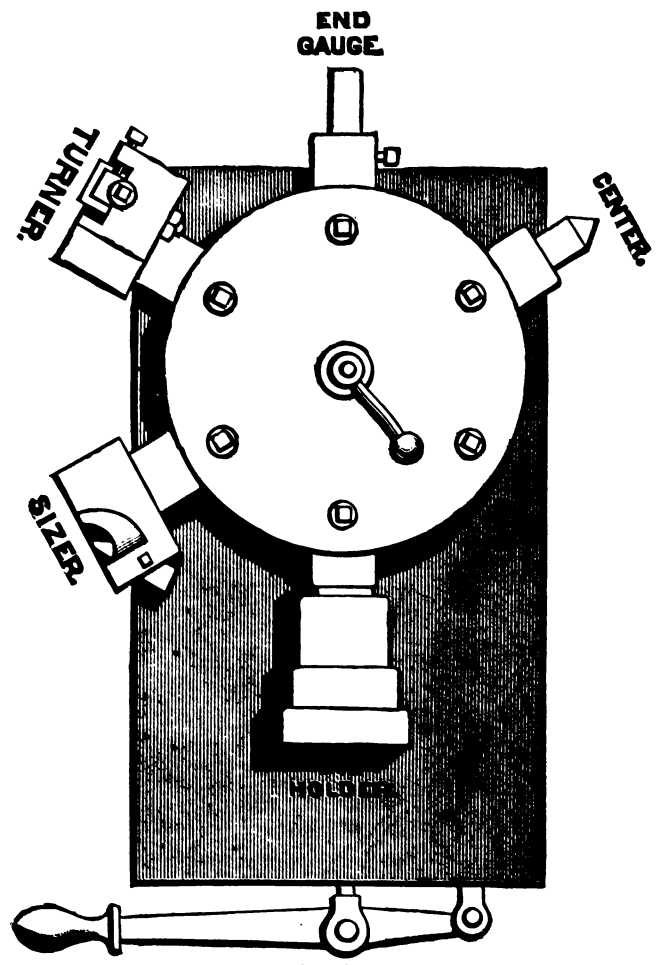

Fig. 694.

lock the turret at any point. The turret slide is fed, in heavy work, by the crank-wheel R on its tail screw. This tail screw carries, inside the crank-wheel, two gears S, which are driven at different speeds by a back shaft behind the machine. These two gears are loose on the tail screw, and a clutch operated by lever T locks either one to the screw. Both the carriage and turret are provided with oil pots not shown in the cuts.

Fig. 695.

A top view of the turret is shown in Fig. 694, a set of tools being shown in place.

The end gauge which is shown removed from the chuck in Fig. 695, is composed of a hollow shank A fitting the hole in the turret, and a gauge rod B fitting the bore of the shank. The shank A may be set farther in or out of the turret, and the rod B may be set farther in or out of the shank, the two combined being

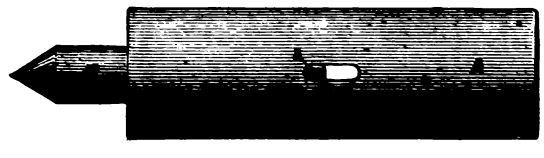

Fig. 696.

so set that when the turret is clear back against its stop the end of the rod B will gauge the proper distance that the bar iron requires to project outwards from the chuck of the machine. The centre shown in Fig. 696 corresponds to an ordinary lathe centre, and is only used when chasing long work in steel.

The turner shown removed from the chuck in Fig. 697, consists of a hollow shank A, fitting the turret and having at its front end a hardened bushing B secured to A by a set screw. It has also a heavy mortised bolt C in the front lug of the shank; an end-cutting tool D shaped like a carpenter's mortising chisel, and clamped by the mortised bolt; a collar screw E to hold the tool endwise; and a pair of set-screws F to swivel the tool and its bolt Bushing B is to suit the work in hand. The tool D is a piece of

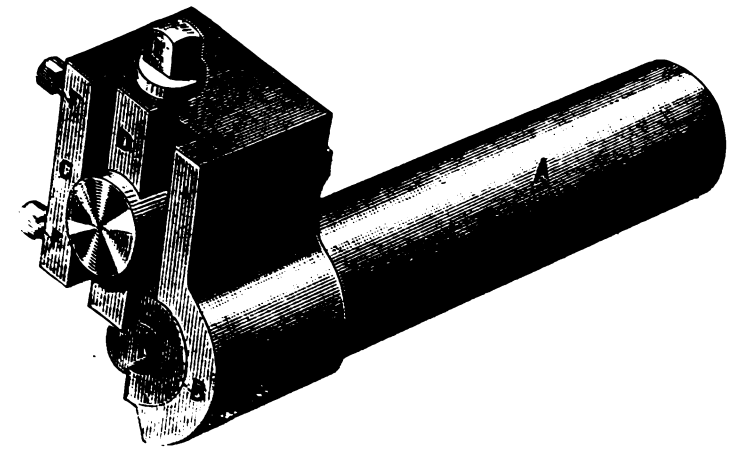

Fig. 697.

square steel hardened throughout. It is held by its bolt with just the proper clearance on its face. It cuts with its end without any springing, and will on this account stand a very keen angle of cutting edge. There is hardly any limit to its cutting power. It will cut an inch bar away at one trip with a coarse feed. It does not do smooth work, and is, therefore, used only to remove the bulk of the metal, leaving the sizer to follow.

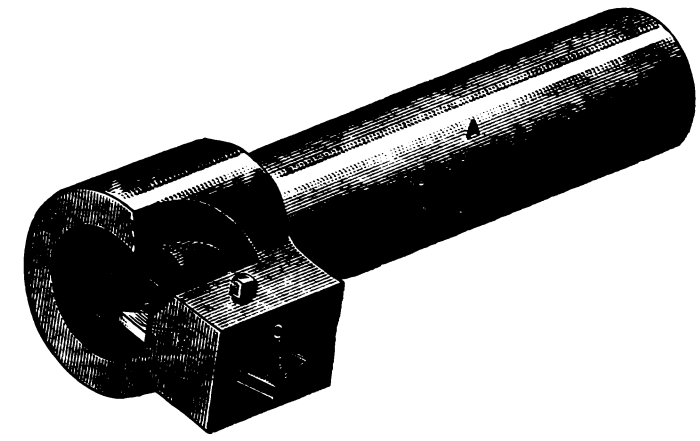

Fig. 698.

The sizer Fig. 698, consists of a hollow shank A fitting the turret and carrying in its front end a hardened bushing B and a flat cutting tool C. The sizer follows the turner and takes a light finishing cut with oil or water, giving size and finish with a coarse feed, and having only a light and clean duty it maintains its size.

The die holder shown in Figs. 699 and 700, is arranged to auto-

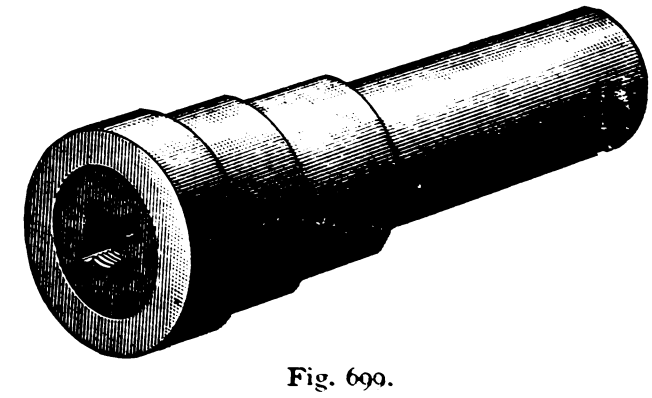

Fig. 699.

matically stop cutting when the thread is cut far enough along the work. It will cut a full thread cleanly up against a solid shoulder. It consists of a hollow shank A fitting the turret; a sleeve B fitted to revolve and slide on the front end of the shank C; a groove E bored inside the sleeve; a pin D on the shank fitting freely in the groove E; a keyway F at one point in the groove and leading out each way from it; and a thread die G held in the front end of the

sleeve. When the turret is run forward, the thread die takes hold of the bolt to be cut, but it revolves idly instead of standing still to cut, until the pin D comes opposite the keyway F when, the turret still being moved forward, the pin enters the back of the keyway. The sleeve now stands still, the die cuts the thread and pulls the turret along by the friction of the pin in the keyway. Finally the turret comes against its front stop and can move for-

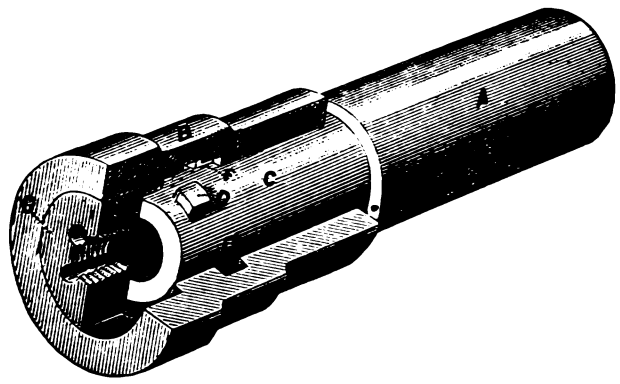

Fig. 700.

ward no farther. Consequently the sleeve is drawn forward on its shank C, and the instant the pin D reaches the groove E the die and sleeve commence to revolve with the work and cease cutting. The machine is then run backward, and the turret moved back a trifle. This causes the pin to catch in the front end of the keyway and the sleeve is again locked. The die then unscrews, and, in doing so, pushes the turret back. A tap holder may be inserted

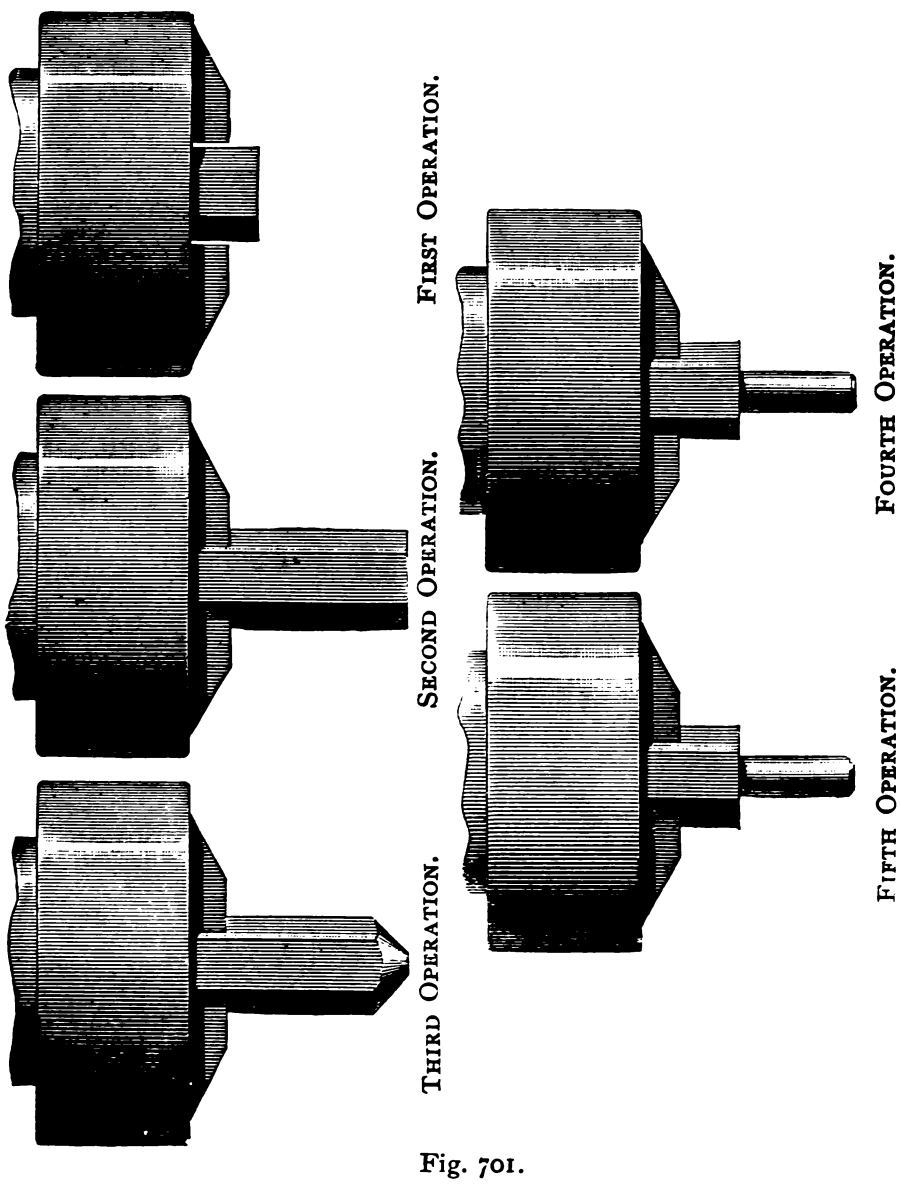

Fig. 701.

in place of the die, and plug taps may be run to an exact depth without danger.

Drills and other boring tools are held in suitable sockets, which fit into the turret.

The following are the operations necessary to produce in this machine an hexagon-headed bolt.

First operation: The bar is inserted through the open chuck.

Second operation: Turret being clear back against its stop and revolved to bring present the end gauge, the bar is set against the end guage, and the chuck is tightened. This chucks the bar and leaves the proper length projecting from the chuck.

Third operation: Front tool in the carriage, a bevelled side toc cones the end of the bar so turret tools will start nicely.

Fourth operation: Turret being revolved to present the turner, the bar is reduced, at one heavy cut, to near the proper size, the turret stop determining the length of the reduced portion.

Fifth operation: Turret being revolved to present the sizer, the body of the bolt is brought to exact size by a light, quick, sliding cut.

Sixth operation: Open die arm being brought down, the bolt is threaded; the left carriage stop indicating the length of the threaded part.

Seventh operation: Turret being revolved to present the die holder, the solid die is run over the bolt, bringing it to exact size

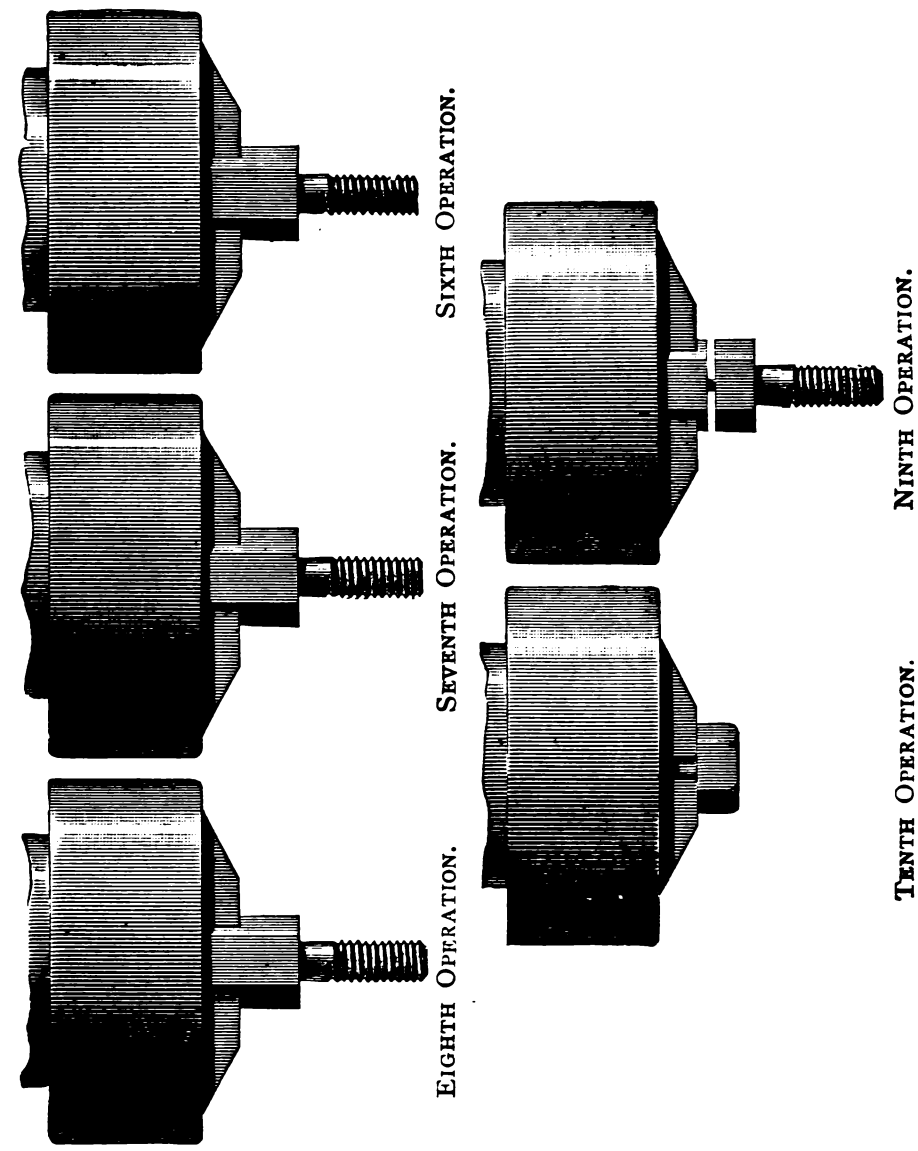

Fig. 702.

with a light cut, and cutting *full thread to the exact point desired.*

Eighth operation: Front tool in the carriage chamfers off the end thread.

Ninth operation: Back tool of carriage, a parting tool, cuts off the bolt; the left carriage stop determining the proper length of head.

Tenth operation: Bolt being reversed in chuck, the top of the head is water cut finished by a front tool in the carriage. This operation is deferred till all the bolts of the lot are ready for it.

Fig. 703 represents a general view of a screw machine designed by Jerome B. Secor, of Bridgeport, Connecticut. The details of the machine are shown in Figs. 704, 705, 706, 707, 708, 709, 710, and 711.* The live spindle is of steel and is hollow, and its journals are ground. The boxes are lined with babbitt, so that no other metal touches the spindle, and may, by a special device, be re-babbitted and bored exactly parallel with the planing of the bed.

A steel collar J, Fig. 704, between the front end of the forward box and the spindles, receives the thrust due to the cut, and a nut on the spindle acts against the cone to adjust it forward on a feather K in the spindle to take up end wear. The wire or rod

* From *Mechanics.*

from which the work is to be made is passed through the spindle and collar on the stand, and is held by a thumb-screw in the collar, which is influenced by the weight and cords, so that when the wire is released in the chuck the weight pulls the collar and wire forward, forcing the wire out through the front end of the chuck until it comes against the stop in the turret, which gauges the length needed to make the piece required. From time to time, as the rod is used up, the thumb-screw in the sliding collar is loosened, and the collar is shoved back on the rod as far as it will go, and the set-screw is again tightened.

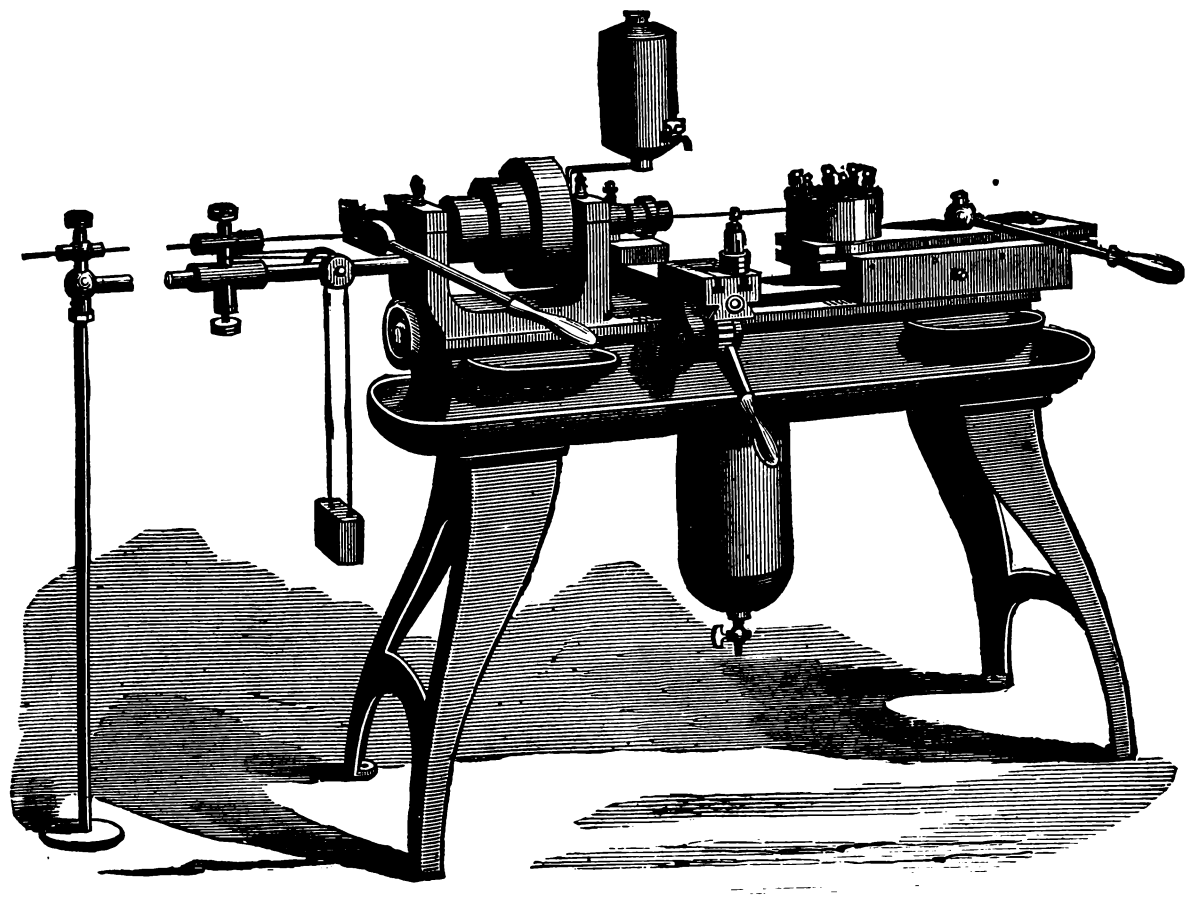

Fig. 703.

Fig. 704 shows in section the front bearing and the automatic chuck. M is a hollow spindle within which is the hollow spindle A, through which the rod or wire to make the work passes. It is prevented from end motion by the cone hub on one side and the collar J on the other side of the bearing, while H may be operated endwise within M by means of the hand-lever shown on the left-hand of the headstock in the general view. The core A of the chuck screws upon M, and is threaded to receive the adjustment nut B, which receives and holds the adjustment wedges C at their ends by the talon shown. The shell D is secured to H by the screws I, which pass through slots in A, and therefore move endwise when H is operated by its hand-lever. Now the mouth of D, against which the adjustment wedges C rest, is coned 2½°, as marked; hence the end motion of D to the left causes C, and therefore F, to approach the axis of the chuck and grip the rod or wire, while its motion to the right causes C, and therefore F, to recede from the chuck axis and to release the wire. Since B is screwed upon A, and C is guided at the end by B, and since also F is detained endwise in A, the motions of C and of F are at a right angle to the chuck axis. Hence in gripping the rod or wire there is no tendency to move it endways, as there is where the gripping jaws have, as in many machines, a certain amount of end motion while closing. When this end motion exists, tightening the jaws upon the work draws it away from the stop in the turret and impairs the adjustment for length of work. The gripping jaws are closely guided in slots in D and in A, and three sets of these jaws are necessary to cover a range of work from the full diameter of the bore of H down to zero. The capacity of each of these sets of jaws, however, may be varied as follows: The adjustment ring B is threaded upon A, and may be operated along A to move C endwise by means of the tangent screw E, whose threads engage with teeth parallel to the axis of B, and running across its width

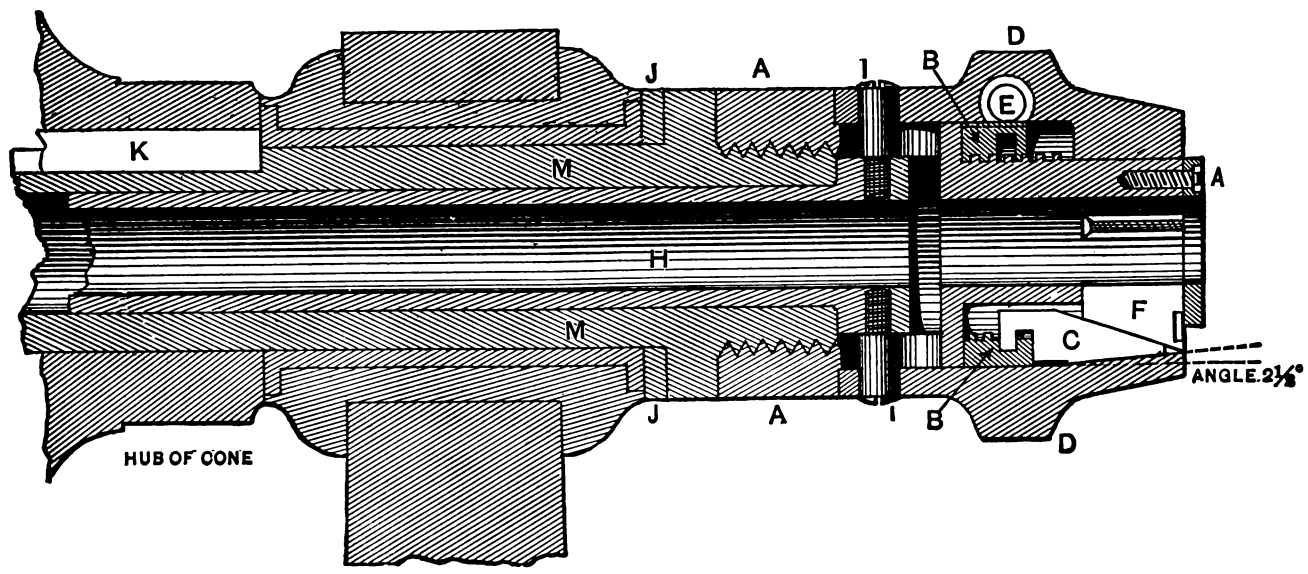

Fig. 704.

all around its circumference, hence rotating E, rotates B, causing it to move along A, and carry C beneath F. By this method of adjustment F need be given only enough motion to and from the chuck axis to grip and release the work, and the reduction of motion between the hand-lever operating H and the motion of F is so great, that with a very moderate force at the lever the wire may be held so that its projecting end may be twisted off without slipping the wire within the jaws or impairing the jaw grip.

Fig. 705 is a sectional and end view of the core A of the chuck, and Fig. 706 a sectional and end view of the shell D.

Fig. 707 represents a sectional side view and an end view of the cross slide, or cutting-off slide, which carries two tool posts,

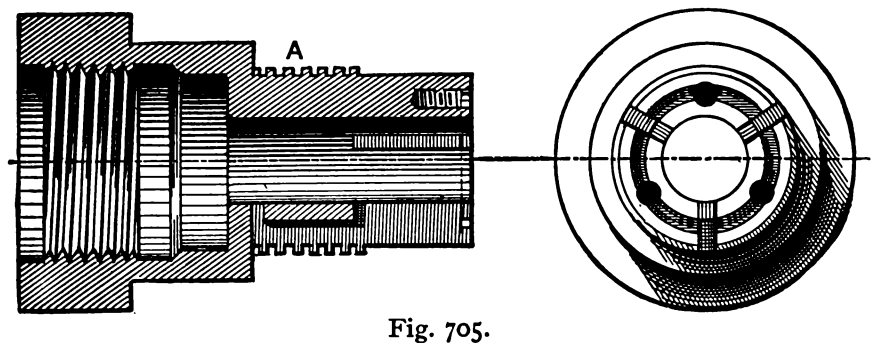

Fig. 705.

and therefore two cutting tools, one of which is at the back of the rest. In place of a feed screw and nut, or of a hand lever and link, it is provided with a segment of a gear-wheel P operating in a rack R, which avoids the tendency to twist the cross slides in its guides which exists when a hand lever and link is used.

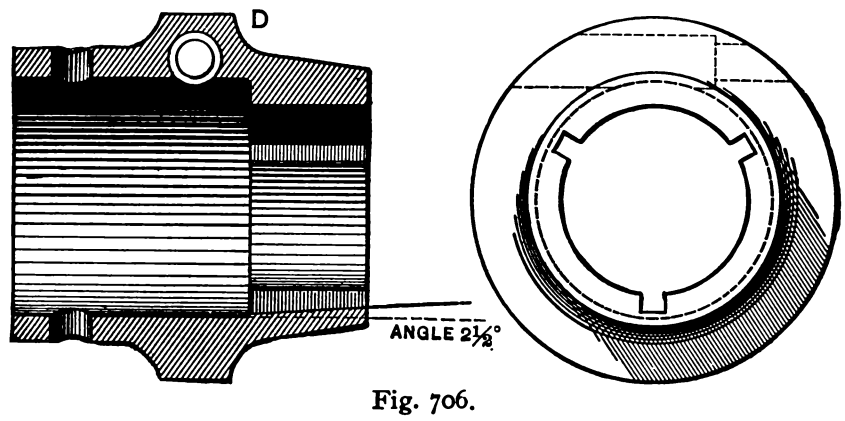

Fig. 706.

The cross slide is adjusted to fit in its guideway by a jaw S^1, Fig. 707, which is firmly screwed to and recessed into R. To take up the wear, the face of S^1 is simply reduced. This possesses a valuable advantage, because it is rigid and solid, does not admit of improper adjustment, nor can the adjustment become impaired at the hands of the operator.

To adjust the position of the cross slide upon the shears a screw passes between the shears and is threaded into the stud Q. This screw is operated by a hand wheel shown in the general view, Fig. 703, beneath the rear bearing of the headstock.

A special and excellent feature of the machine is the stop device for the motion of the cross slide which is shown in Fig. 707.

The screw S has one collar C, solid on it, and the screwed end is tapped into the sliding sleeve T, which is held from turning by the stud A. Between the solid collar C and the loose collar B there is a short, stiff spiral spring, as shown; by means of the fast and loose collars, the spring and the screwed thimble D, a strong friction is had on the collar B, which is ample to keep the screw from turning while in use as a stop, although it permits the screw to turn easily enough when a wrench is applied to the square end. Precisely the same device is used at the other end of the slide to stop it in the opposite direction.

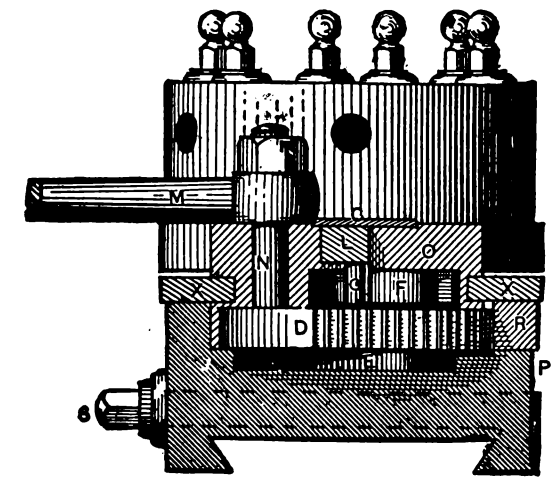

Fig. 708.

Details of the mechanism of the turret and turret slide are shown in Figs. 708, 709, and 710. Fig. 708 is an end sectional view of the turret slide, which is traversed on its base by a segment D of a gear operating in a rack R (in the same manner as the cutting-off slide), the segment being connected by stud N to handle M. O represents the body of the slide, which is grooved at the sides to receive the gibs X, which secure it to the base P on which it slides. P is clamped to its adjusted position on the shears or bed by means of the gib, shown in dotted lines, which is pulled laterally forward by the screw S, which is tapped into the stem of the gib. The method of rotating the slide and of locking it in position is shown in Fig. 709, which is a top view of the turret head, and Fig. 710, which shows O removed from P and turned

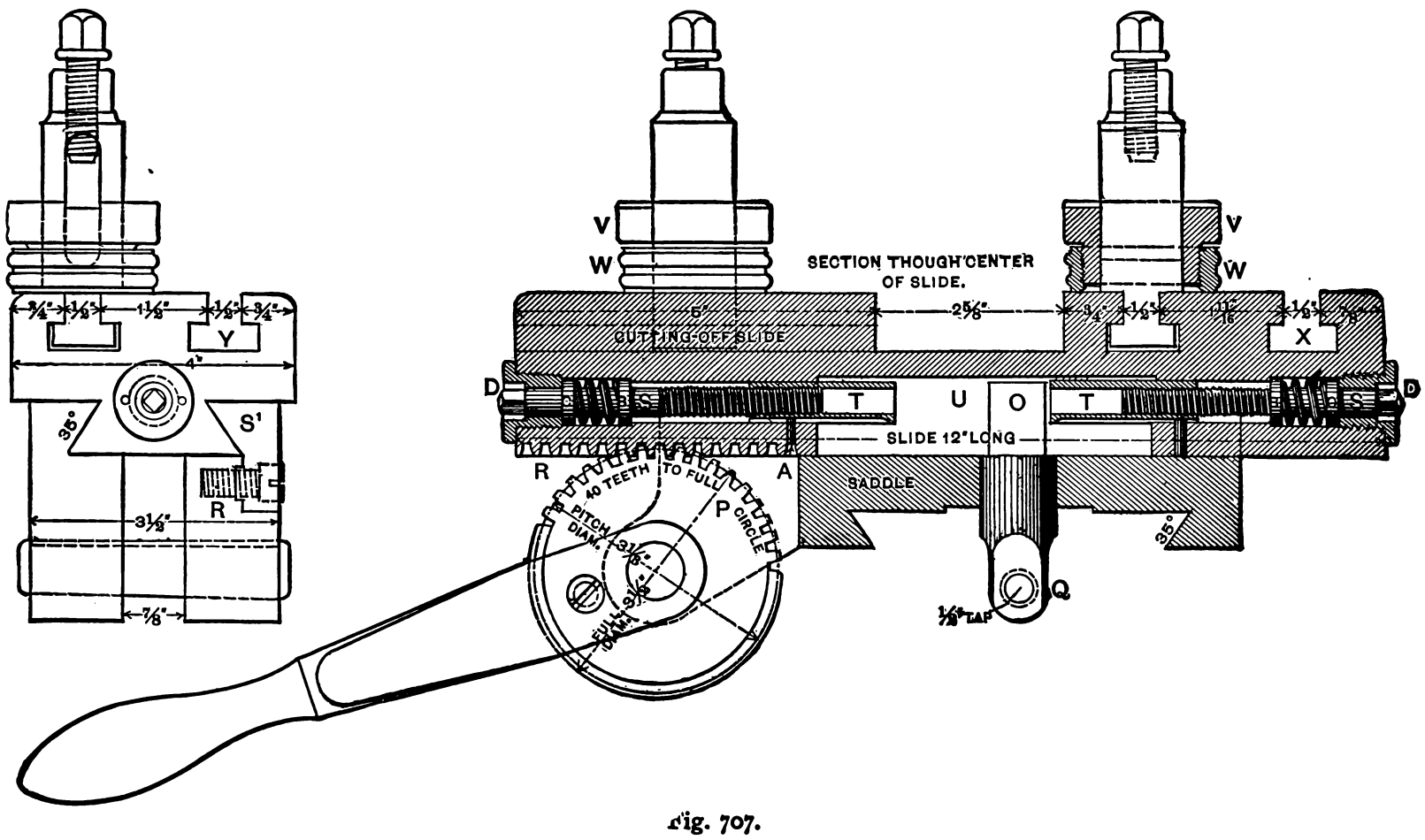

Fig. 707.

upside down. Pivoted to segment D is a rod E having at K a pin that as motion proceeds falls into S and rotates T, which is fast to the bottom of the turret. Upon the handle M being moved backward the segment begins its motion forward, as indicated by the arrow in Fig. 710, thereby moving the slide backward upon the gibs by the working of its cogs into the rack R, Fig. 708, which is attached to the base P. When the segment D has accomplished about one-half its motion the pin H, which is on the upper side of the segment D, comes in contact with the projection or lug on the side of the cam F, as shown by the arrow head in Fig. 710, bringing the opposite side of the cam against the pin G, Fig. 709, thereby moving it backward, compressing the spring U, and drawing the bolt L from its seat in the disc V. This operation is completed before the motion of the segment brings the pin K in contact with the ratchet-wheel T. The segment D in continuing its motion after the pin K is brought into the notch S, begins the revolution of the turret on its axis. As will be seen by the inspection of Fig.

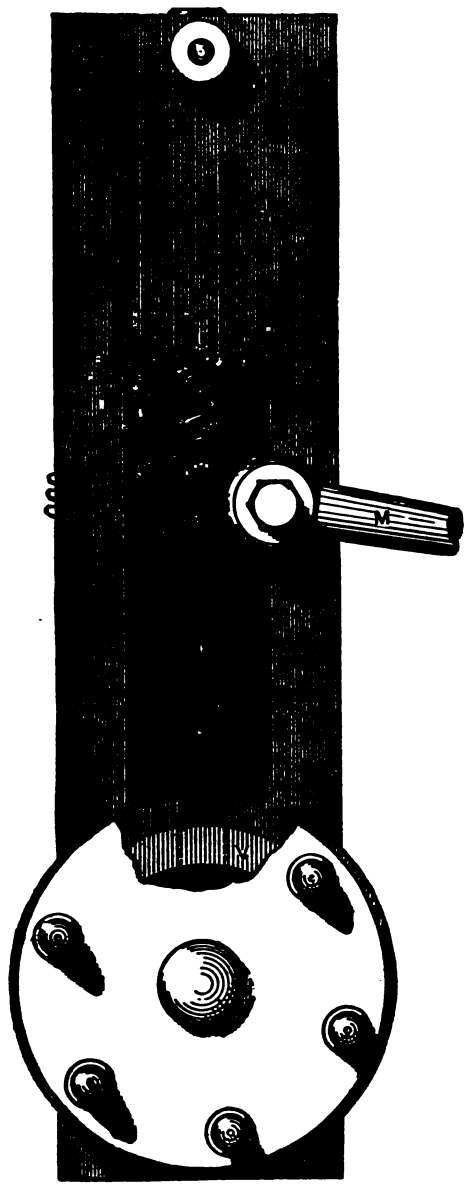

Fig. 709.

710, the pin H works upon a much longer radius than the projection upon the cam with which it comes in contact, and therefore, after a given part of its motion is complete, gets beyond the reach of the cam, thereby releasing its hold and allowing the bolt L, Fig. 709, to be forced against the disc V by the expansion of the spring U, which occurs soon after the turret has commenced its revolution by the contact of pin K with the wheel T. The completion of the movement of the handle M (and the segment D) completes the revolution of the turret one-sixth of its circumference, thereby allowing the bolt L, by the further expansion of the spring U, to be forced into its next opening or seat in the disc V. The forward motion of the handle M brings the turret forward to its position at the work and restores the parts to their former positions, as shown in the illustrations.

The stop motion for the forward motion of M, and that therefore determines the length of turret traverse forward, and hence the distance each tool shall carry its cut along the work, is shown in Fig. 711. The end of the screw A abuts against the stop B in the usual manner; it is, however, threaded through the eye of a bolt C, as well as through the end of the turret slide, so that it may be locked by simply operating the nut D. Thus the use of a wrench is obviated, and the adjustment is more readily effected.

Figs. 712 and 713 represent a screw machine by the Pratt and Whitney Company, of Hartford, Connecticut, and having Parkhurst's patent wire or rod feed for moving the work through the hollow spindle and into position to be operated upon by the tools. The reference letters correspond in both figures.

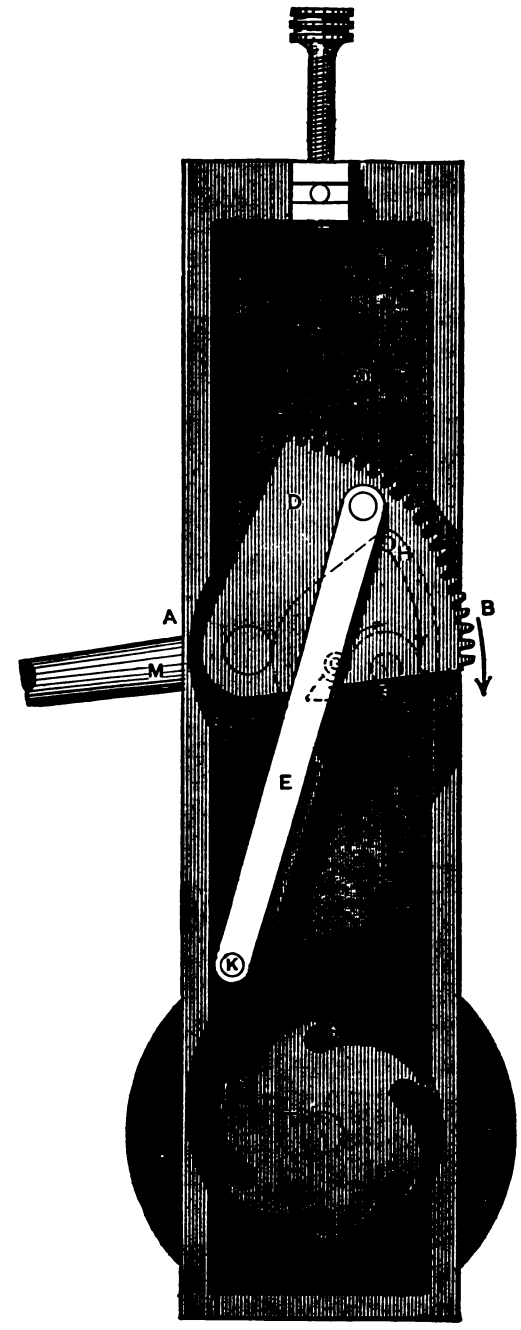

Fig. 710.

At A is the front and at B the back bearing, affording journal bearing to a hollow spindle C, which carries the shell D of the work-

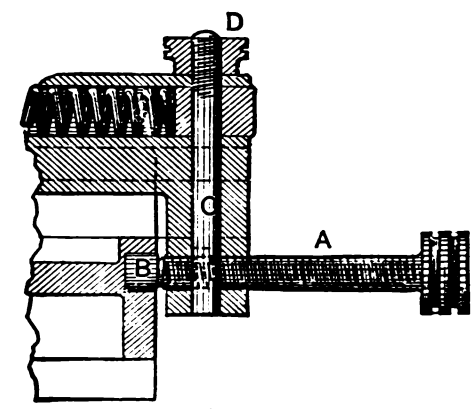

Fig. 711.

gripping chuck, the clutch ring H and a collar I, in which is pivoted, at J, the clutch levers G. This collar is threaded upon C and is locked in position by a ring lock nut J'. The clutch arm K slides upon a rod X, and has a feather projecting into a spline in X. The core E of the work-gripping chuck is fast upon the inner spindle F which revolves with the outer one C. The left-hand end of F abuts

against the short arms of the clutch levers G, and it is obvious that when K is operated back and forth upon X, it moves the clutch H endways upon C, and the cone upon H operates the levers G, causing them to move the inner spindle F endways and the inner cone E of the chuck to open or close. Suppose, for example, that K (and hence H) is moved to the right, and the long ends of G will be released and may close moving their short ends away from the end of F, and therefore releasing E from its grip upon the work. In moving K to the right the sleeve L is also moved to the right, and its serrations at L′ being engaged with the tongue P, the sleeve M is pulled forward. Now the bar or rod of which the work is made is held at one end by the chuck, it is supported by the bushing Z in the end of spindle C, and in the bushing S in the arm of sleeve M, while it has fast upon it a collar T. When therefore M is pulled forward or to the right, its arm meets T and pulls the rod or bar for the work through the chuck E.

On the other hand when K and therefore H, L, and M, are moved to the left, levers G are opened at their long ends by the cone of H. The short ends of G push the inner spindle F to the right, E passes through D, and being split, closes upon the work and grips it, the parts occupying the positions shown in the figure. The same motion of K passes L through the sleeve M (the teeth at N raise the catch P, allowing L′ to pass through M) so that at the next movement of K to the right, M will be pulled a second step forward, again passing the work through the chuck. Q is merely a pin wherewith to lift P and enable M to be moved back, when putting in a new rod for the work; K is operated by a link from U to V, the handle for moving this link being shown at W in the general view.

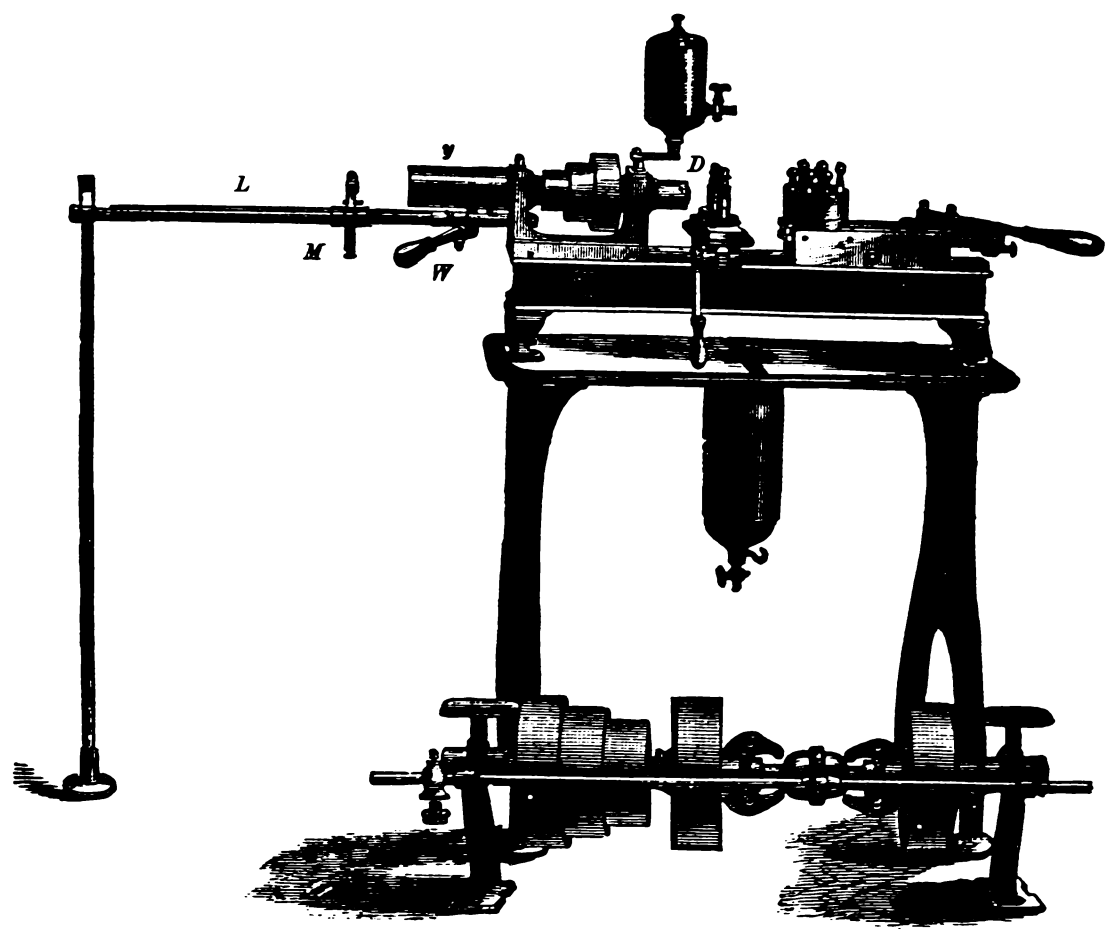

Fig. 712.

To prevent the sleeve M from moving back with L it is provided with a shoe O, pressed by the spring R against X, thus producing a friction between M and X that holds M while L slides through it. R′ is to regulate the tension of the spring at R. *y* is merely a sleeve to protect the clutch mechanism from dust, &c.

Box tools for screw machines are used for a great variety of special work. They are simply boxes or heads carrying tools and a work-steadying rest.

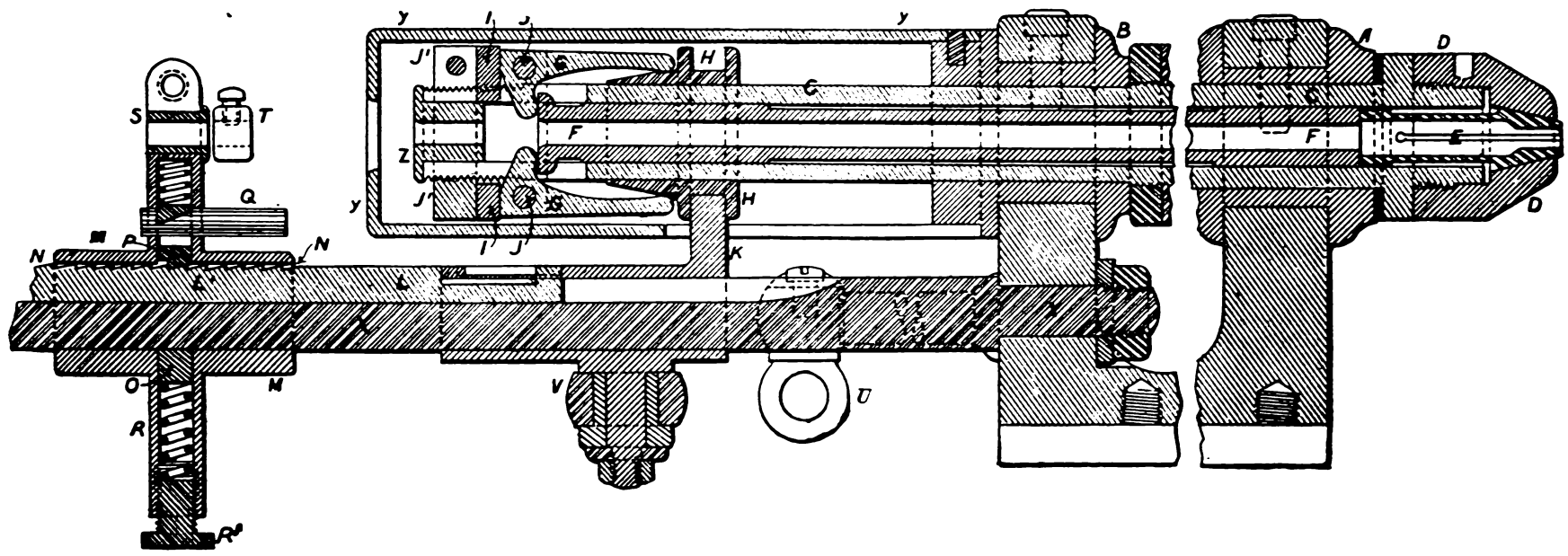

Fig. 713.

Fig. 714 represents a box tool for a screw machine. The cylindrical stem fits into the turret holes and contains a steadying piece or rest G to support the work and keep it to its cut. In the box tool shown in the figure, there are four cutting tools set in to the depth of cut by the screws A, B, C, and D respectively, and a fifth for rounding off the end of the work is shown at E.

Fig. 715 represents a top view, Fig. 715*a* a front view, and Fig. 715*b* an end view, of a box tool for shaping the handles for the wheels of the feeding mechanism of machines. The work is first turned true and to its required diameter, and the rest is set to just

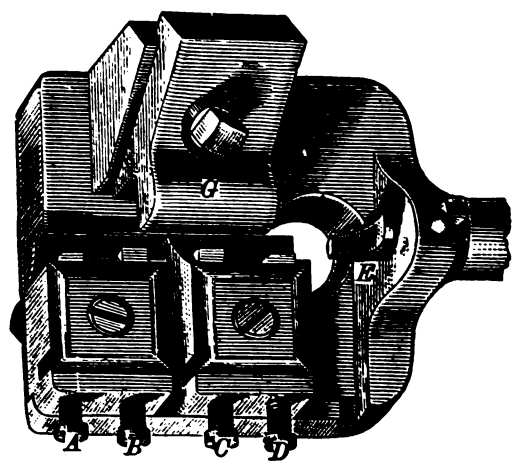

Fig. 714.

bear against the work to steady it and hold it against the pressure of the cut. The cutter is cylindrical with a gap cut in it at G, so as to give a cutting edge. By grinding the face of this gap the tool is sharpened without altering its shape, as is explained with reference to circular or disc tools for lathe work. The cutter is provided with a stem by which it is held in the slide, through the medium of the clamp. The slide is operated by an eccentric on the spindle or rod R, which is operated by the handle H. The stop obviously arrests the motion of the slide when it meets the collar by the set-screw shown, and this collar is clutch shaped on its back face, engaging a similar clutch face on the shoulder of the arbor, the object of this arrangement being as follows. Suppose it is required to cut a thread a certain distance, as say, $\frac{3}{4}$ inch, along a stud, and that the depth of the clutch is $\frac{1}{4}$ inch. Suppose that when the turret is fed forward sufficiently the thread is cut half an inch along the work at the moment that the turret meets its stop and comes to rest, then the die will continue to feed forward one-quarter of an inch, moving along the body or stem of the holder until its clutch face disengages, when the die will revolve with the work.

Fig. 717 represents a cutting-off tool and holder for a screw machine. The tool fits into a dovetail groove in the split end of the holder, and is ground taper in thickness to give the necessary clearance on the sides. It is held by the screw shown, which closes the split and grips the dovetail; obviously the top face only is ground to resharpen it.

Fig. 718 represents a special lathe for wood work designed and constructed by Charles W. Wilder, of Fitchburg, Massachusetts. It is intended to produce small articles in large quantities, cutting them to duplicate form and size without any further measurements than those necessary to set the tools in their proper respective positions. It is employed mainly for such work as druggists' boxes,

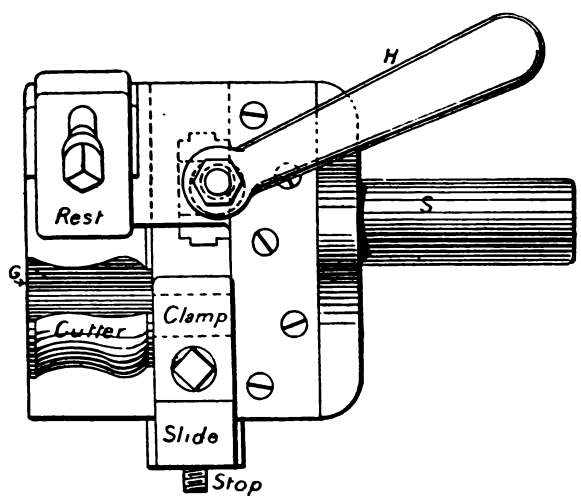

Fig. 715.

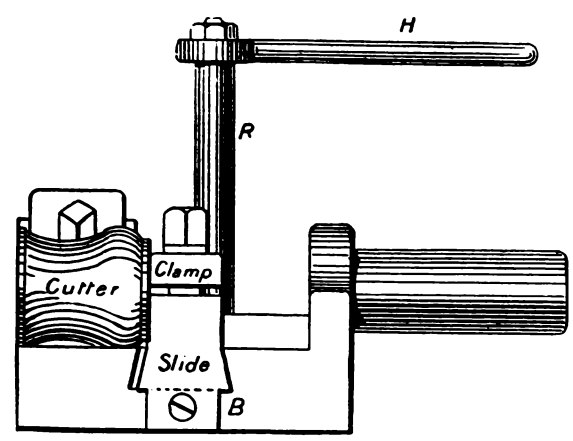

Fig. 715*a*.

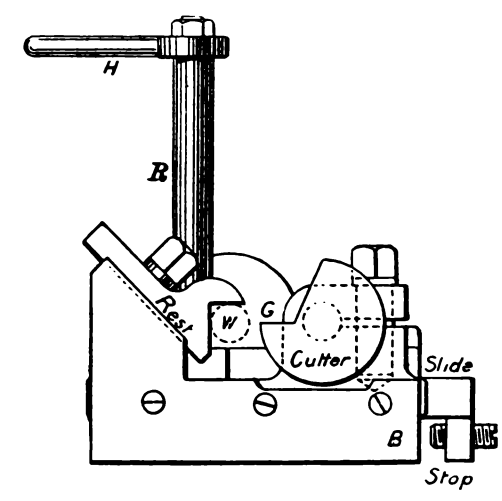

Fig. 715*b*.

box B, and this determines the diameter of the work, which is represented by W in the end view figure.

Fig. 716 represents the die holder and die for the Pratt and Whitney Co.'s screw machine. The die is cut through on four sides, and is enveloped by a split ring having a screw through its two lugs, so that by operating the screw the die may be closed to take up the wear and adjust it for diameter. It is secured in a tool handles, straight spokes for toy vehicles, piano pins, balls, rings, and similar work.

Its movements are such that the tools are guided by stops determining the length and the diameter of the work so as to make it exactly uniform, while the form of the cutting tools

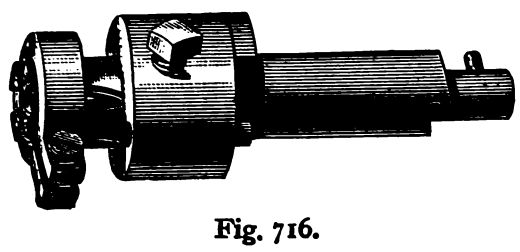

Fig. 716.

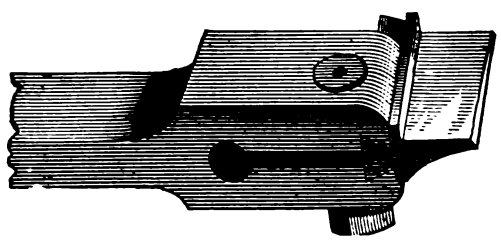

Fig. 717.

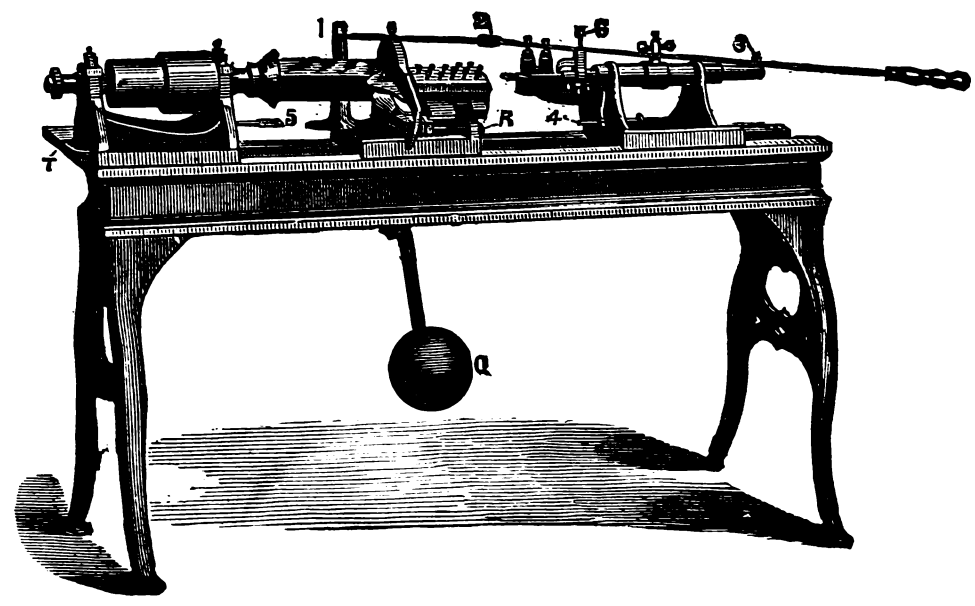

Fig. 718.

determines the form of the work, which must therefore be uniform.

The lathe may be described as one having a carriage rest spanning the bed of the lathe, which rest holds the work axially true with the lathe centres without the aid of the dead centre, while it at the same time trues the end of the work and leaves it free to be operated upon by other tools, which, after once being

set and adjusted, shape any number of pieces of work to exact and uniform diameter and shape.

The manner in which this is accomplished is as follows: Fig. 718 is a general external view of the lathe; Fig. 719 is an end elevation view of the rest from the cone spindle end, and Fig. 720 is an end view of the rest viewed from the tailstock end of the lathe. A is a ring fastened in the rest R by the set-screw B. The mouth C of the ring which first meets the work is coned, or

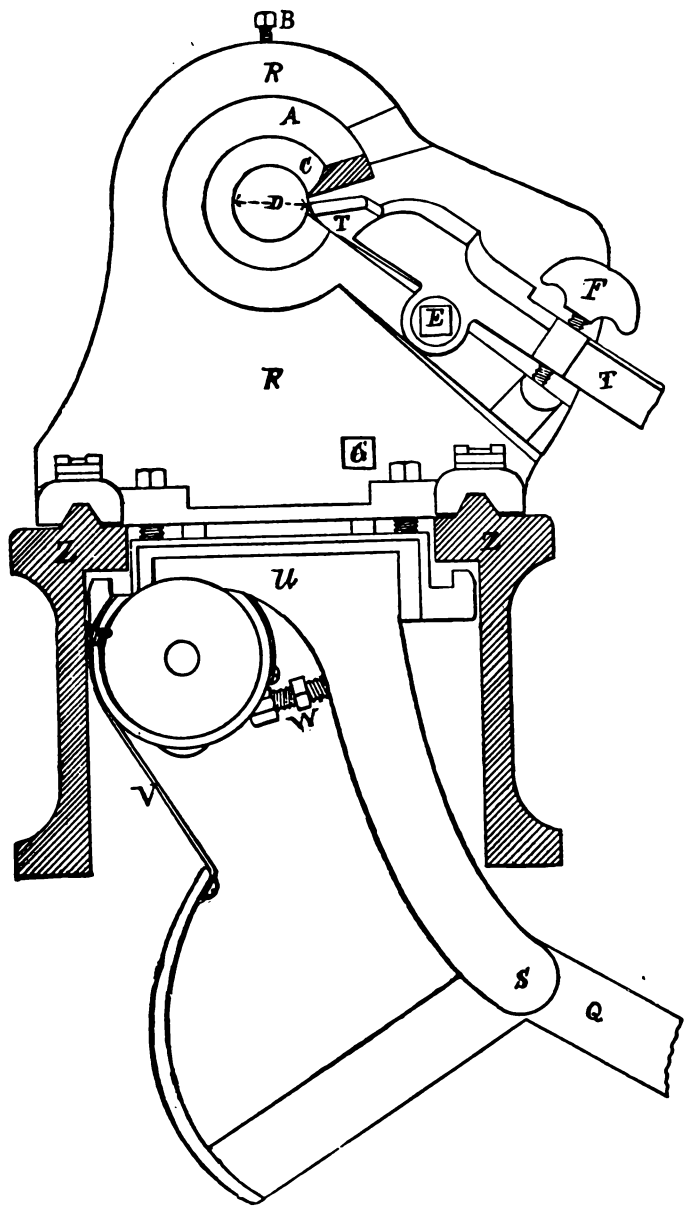

Fig. 719.

beveled, as shown, and an opening on one side of the ring admits a cutting tool T. Now the work is placed one end in the cone driving chuck on the lathe spindle, and the other end in the cone or mouth C, Fig. 719, being kept up to the driving chuck by the end pressure of C. As the work rotates, the tool T cuts it to the diameter D of the ring bore, the carriage or rest R traversing along the lathe bed as fast as tool cuts; hence the bore D serves as a guide to hold the work and make it run true, this bore being axially true with the lathe centres. The cone surface of C thus operates the same as the sole of an ordinary carpenter's plane, the tool T cutting more or less rapidly according as its cutting edge is set to project more or less in advance of the surface of the cone or recess C. This admits of the tool cutting at a rate of feed that may best suit the diameter of the work and the nature of the wood. The tool T, is operated laterally to increase or diminish the rate of feed by the screw E, which also serves as a pivot, so that by operating the thumb-screw F, the tool point may be adjusted for distance from the centre of the bore D, or in other words the diameter to which the tool T will turn the work is adjusted by the thumb-screw F. G is the head of the pivot screw that the swing tool holder H works upon, and this swing motion carries the forming tool or cutter X, which shapes the work to the required form. I is a shaft upon which a lever, carrying the tool holder J, works, the latter carrying the severing tool K, which severs the finished work from the stick of wood from which the work is made.

The tool holders H and J are connected by means of the arms L and M to the stud O, fast in wheel P, operated by a knee lever Q, which is pivoted at S to *u*, which is fast to one of the gibs that hold the carriage to the lathe Vs. The knee lever Q is connected to the wheel P by a raw-hide strap, or belt V, so that the operator, by pressing his knee upon the end of the lever Q, causes the wheel P, to partly rotate, carrying O with it (O being fast in P), and gives a forward radial motion to tool holder H and cutter X, causing the latter to enter the work until such time as the stud O and the screw stud W are in line, horizontally with the centre of the wheel P, after which tool holder H will move back, while the severing tool K (which has a continuous upward or vertical movement) is cutting off the finished work, which has been formed to shape, and reduced to the required diameter by the forward movement of the tool or cutter X. The object of the backward or retiring motion of H is to relieve the shaping tool X from contact with the work, while K cuts it off, or otherwise the work might meet X when cut off, and receive damage from contact with it. The stud W, connecting tool holder H with the wheel P, is threaded with a right and left-hand screw, by operating which the tool X may be operated to reduce the work to any required diameter.

The rest or carriage R traverses along the lathe shears or bed Z, carrying with it all the levers and tools, so far described.

The tailstock, or back head, carries a tool holder in the rear of the spindle, in which fits also a drill bit or other cutting tool.

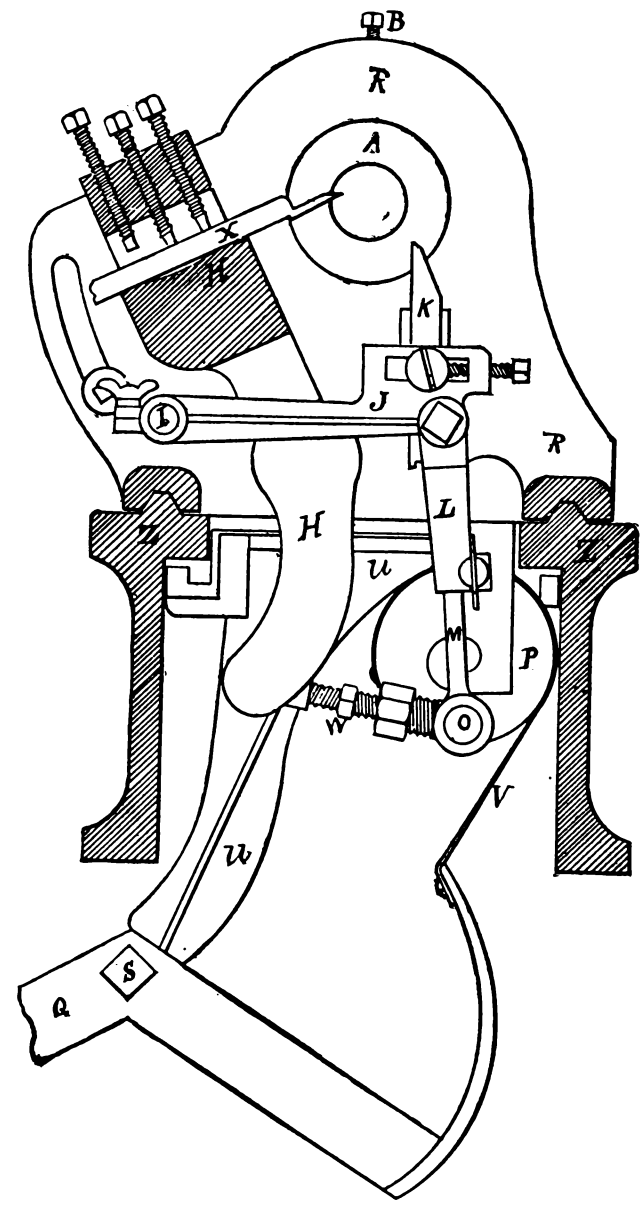

Fig. 720.

The method of traversing and operating the carriage R and the back head is as follows:

At the back of the bed or shears is a table, shown at T, in Fig. 718. Upon this table is a stand to which is pivoted the end of a lever, as is shown at 1 in figure. This lever has a joint at 2, and is connected to the tailstock spindle at a joint marked 3. It is obvious that by operating the lever laterally, joint 2 will double, and the tail spindle will be moved along the bed. If the tail spindle is not locked it will simply feed through the tailstock and

the tool in the spindle will operate, but if it is locked (by the ordinary screw shown), then the handle will slide the whole tail-stock and the tool in the holder at the back of the tail spindle may operate.

At 4 is an adjusting screw, which, by coming into contact with the carriage R causes it also to traverse, which it will do

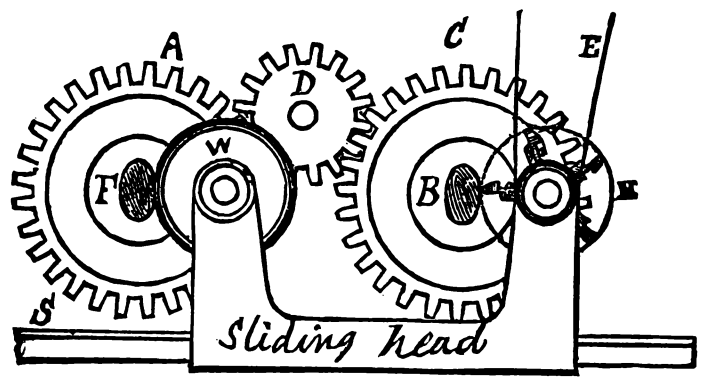

Fig. 721.

until it meets against a screw on the other side, marked 5, in Fig. 718, which, standing farther out than the chuck prevents the cutting tool from meeting the chuck.

The movement of the carriage continues until the stop-gauge 6 meets the end of the work, hence the length of the work is from the cutting-off tool to the face of stop 6. The adjustment for the length of the work is made by means of screw 4, which will slide the carriage R, as soon as it meets it, independent of what distance the stop 6 may be from the work end. The tail-stock carries two tool holders, similar to those on an ordinary lathe. When the cutting tools are used to cut completely over the end of the work, as in ball turning or a round ended handle, the stop 6 is not used, the tool which rounds the end acting as a stop of itself.

When bits are used they are held in the tail spindle and are made of a proper length to give the required depth of hole, or sometimes the face of the bit-holder may be used as a stop.

When the tools, cutters, and belts are all properly adjusted in position to cut to the required respective diameters or lengths the operator has simply to place a stick of wood in the lathe and operate the respective handles or levers in their proper consecutive order, and the work will be finished and cut off, the operation being repeated until the stick is used up, when a new one may be inserted, and so on.

LATHES FOR IRREGULAR FORMS.—In lathes for irregular forms (which are chiefly applied to wood and very rarely to metal turning), the work is performed by rotary cutting tools carried in a rapidly rotating head. The work itself is rotated slowly and the carriage or frame carrying the cutting tools is caused to follow the outline of the pattern or *former* at every point in its circumference as well as in its length. The principle of action by means of which these ends are attained is represented in Fig. 721, in which S represents a slide which carries the sliding head, affording journal bearing to the rotating head H, driven by the belt E, and carrying the cutters, and also the wheel W. F represents the pattern or former, and B a piece of wood requiring to be turned to the same form as that of F. Suppose then that F be slowly rotated by A and C, receiving rotary motion from A (through the medium of D), then the rotations of C will equal those of F, because the diameter of A is equal to that of C. The diameter of the circle described by the cutters at H is also equal to the diameter of W, hence the motion of the extremities of the cutters is precisely the same as that of the circumference of W, and as W receives its motion from F it is obvious that the cutters will reduce G to the same form and size as F, and if the head be traversed in the same direction as the axis of F, then the diameter and form of B will be made to correspond to that of F at every corresponding point throughout its length. Contact between W and F is maintained by means of a weight or spring, the rotation of F being sufficiently slow to insure its being continuous, while the necessary rapidity of cutting speed for the tools is attained by rotating H at the required speed of rotation.

This class of lathe is termed the "Blanchard" lathe from the

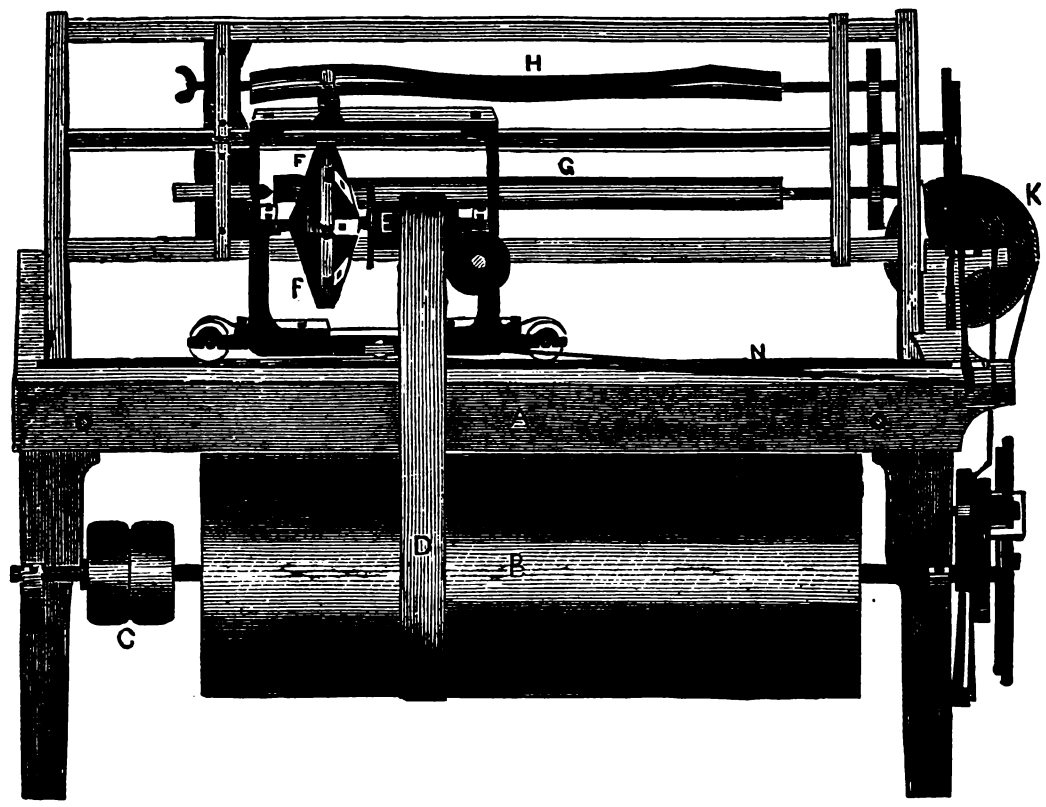

Fig. 722.

name of the inventor, or "Lathe for irregular forms," from the chief characteristic of the work, but is sometimes designated from the special article it is intended to turn, as "The Shoe-last lathe," "Axe-handle lathe," "Spoke lathe," &c., &c.

Let Fig. 722 represent a lathe of this kind provided with a frame A affording journal bearing to the shaft of the drum B, which is driven by the pulleys C. Let E represent a pulley receiving motion from B by the belt D. The cutting tools are carried by the head F which is rotated by pulley E. Let the carriage or frame carrying the shaft of E carry a dull pointed tracer, with continuous contact with the *former* H by means of a weight or spring, the carriage being so connected to the way N on which it traverses that it is capable of rocking motion, and if H be rotated the carriage will, by reason of the tracing point, have a motion (at a right angle to the axis of H) that will be governed by the shape of H; hence since G rotates equally with H, the form of the blank work G will be similar to that of H, but modified by reason of the tracing point being at a greater distance than F from the centre of rocking motion.

All that is necessary to render this motion positive throughout the lengths of G and H is to connect them together by gears of

equal diameter, and traverse the carriage along N for the full length of the pieces. But the effect will be precisely the same if the frame carrying G and H be pivoted below, capable of a rocking motion, and H be kept against the tracing point by means of a spring or weight, in which case the carriage may travel in a straight line upon N and without any rocking motion. This would permit of the carriage operating in a slide way on N enabling it to traverse more steadily.

To maintain continuous contact between the tracing point and the *former* H, the rotations of H are slow, the necessary rapidity of tool cutting action being obtained by means of the rapid rotation of the head and cutters F.

Since motion from the line shaft to the machine is communicated at C it is obvious that the gears or devices for giving motion to H and G may be conveniently derived from the shaft carrying C and B, for which purpose it extends beyond the frame at one end as shown. Lathes of this kind are made in various forms, but the principles of action in all are based upon the principles above described.

BACK KNIFE GAUGE LATHE.—This lathe, Fig. 723, has a carriage similar to that described with reference to Fig. 718, and carries similar tools upon the tailstock. It is further provided, and by hand or by a self-acting motion provided as follows:—A screw running parallel to the cone spindle is driven by suitable gearing from the cone spindle. At each end of this screw it gears into a worm-wheel having journal bearing on the end of the slide rest feed screw as shown. By a small hand wheel on the end of the slide rest feed screw the worm-wheel may be caused to impart motion to the feed screw by friction causing the slide rest to feed. But releasing this hand wheel or circular nut releases its grip upon the feed screw, and permits of its being operated by the handle provided at the other end. The rail carrying the slide rest is adjustable in and out to suit varying diameters of pulleys, being secured in its adjusted position by the bolts shown.

The cut is put on by means of the upper part of the compound rest. To turn a crowning pulley the rails carrying the slide rests are set at an angle, the graduations shown on the edge of the ways to which they are bolted being to determine the degree of angle. When the pulley surface of the pulley is to be "straight" both tools may commence to operate on one edge of the pulley surface, the advance tool taking a roughing and the follower tool a finishing cut; but for crowning pulleys the tools may start from opposite edges of the pulley, the cuts meeting at the middle

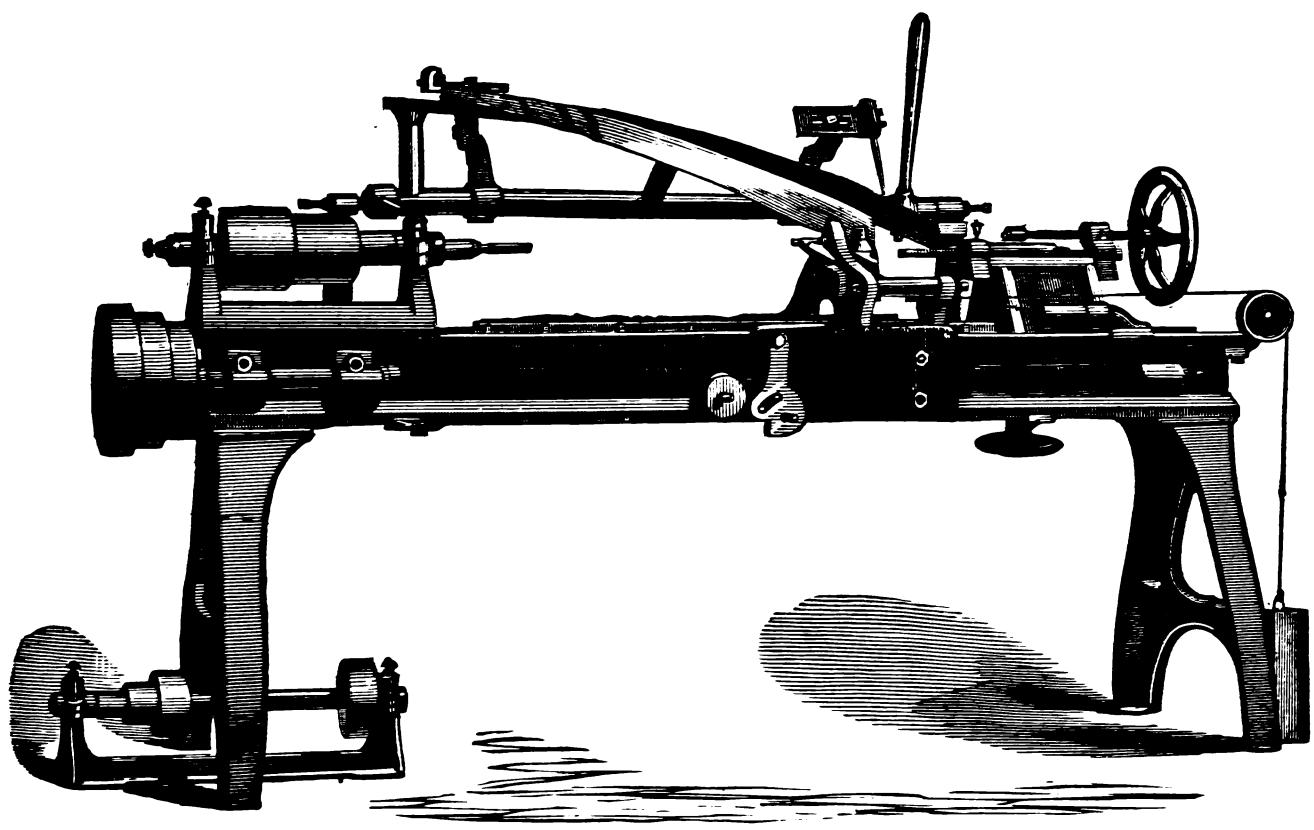

Fig. 723.

however, with a self-acting feed traverse to the carriage, and by means of a rope and a weight, with a rapid carriage feed back or from left to right on the bed, and also with a knife at the back. This knife stands, as seen in the engraving, at an angle, and is carried (by means of an arm at each end) on a pivoted shaft that can be revolved by the vertical handle shown. The purpose of this knife is first to shape the work and then to steady and polish the wood or work. Obviously when the knife is brought over upon the work its cutting edge meets it at an angle and cuts it to size and to shape; the surface behind the cutting edge having no clearance rubs against the work, thus steadying it while polishing it at the same time. These lathes are used for turning the parts of chairs, balusters, and other parts of household furniture, the beads or other curves or members being produced on the work by suitably shaped knives, which obviously cut the work to equal shape and length as well as diameter, and it is from this qualification that the term "gauge" is applied to it.

Fig. 724 represents the Niles Tool Works special pulley turning lathe, in which motion from the cone spindle to the live spindle is conveyed by means of a worm on the cone spindle and a worm-wheel on the live spindle. Two compound slide rests are provided, the tool on the rear one being turned upside down as shown. These rests may be operated singly or simultaneously, of the face; hence the angles at which the respective rails are set will be in opposite directions.

The pulleys to be turned are placed upon mandrels and driven by two arms engaging opposite arms of the pulley. To drive both arms with an equal pressure, as is necessary to produce work cylindrically true, an equalizing driver on Clements' principle (which is explained in Fig. 756, and its accompanying remarks) is employed.

For driving the pulleys to polish them after they are turned the cone spindle is hollow at the rear end and receives a mandrel. The high speed at which the cone spindle runs renders this possible, which would not be the case if wheels and pinions, instead of worm-gear, were employed to communicate motion from the cone to the live spindle. A wheel shown in position for polishing is exhibited in the cut, the pivoted arm in front affording a rest for the polishing stick or lever.

BORING AND TURNING MILLS.—The boring and turning mill patented in England by Bodmer in 1839, has developed into its present improved form in the United States, being but little known in other countries. It possesses great advantages over the lathe for some kinds of turning and boring, as wheels, pulleys, &c.

The principal advantages of its form of construction are:—

1st. That its work table is supported by the bed at its perimeter as well as at its centre, whereas in a lathe the weight of the

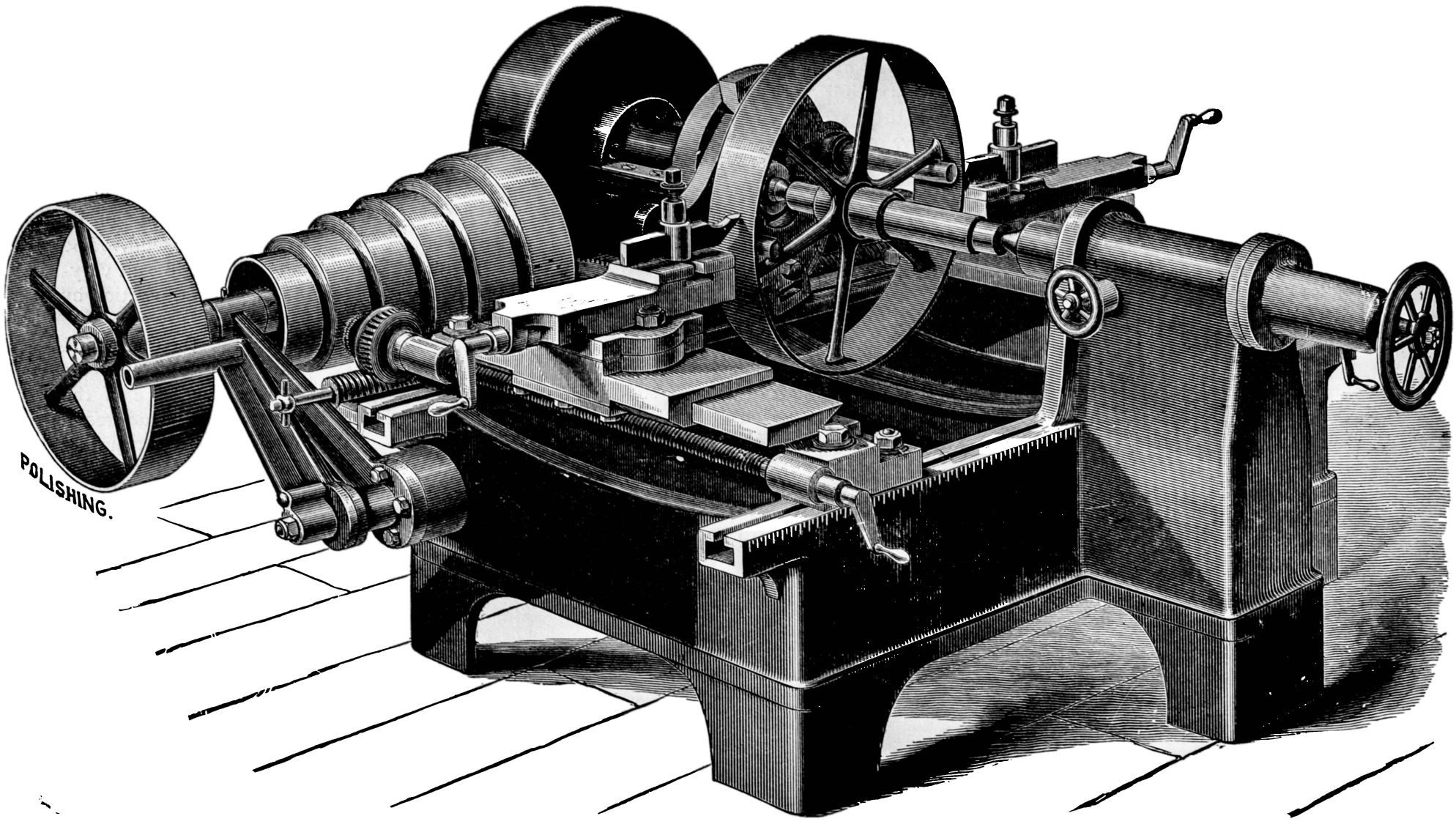

Fig. 724.

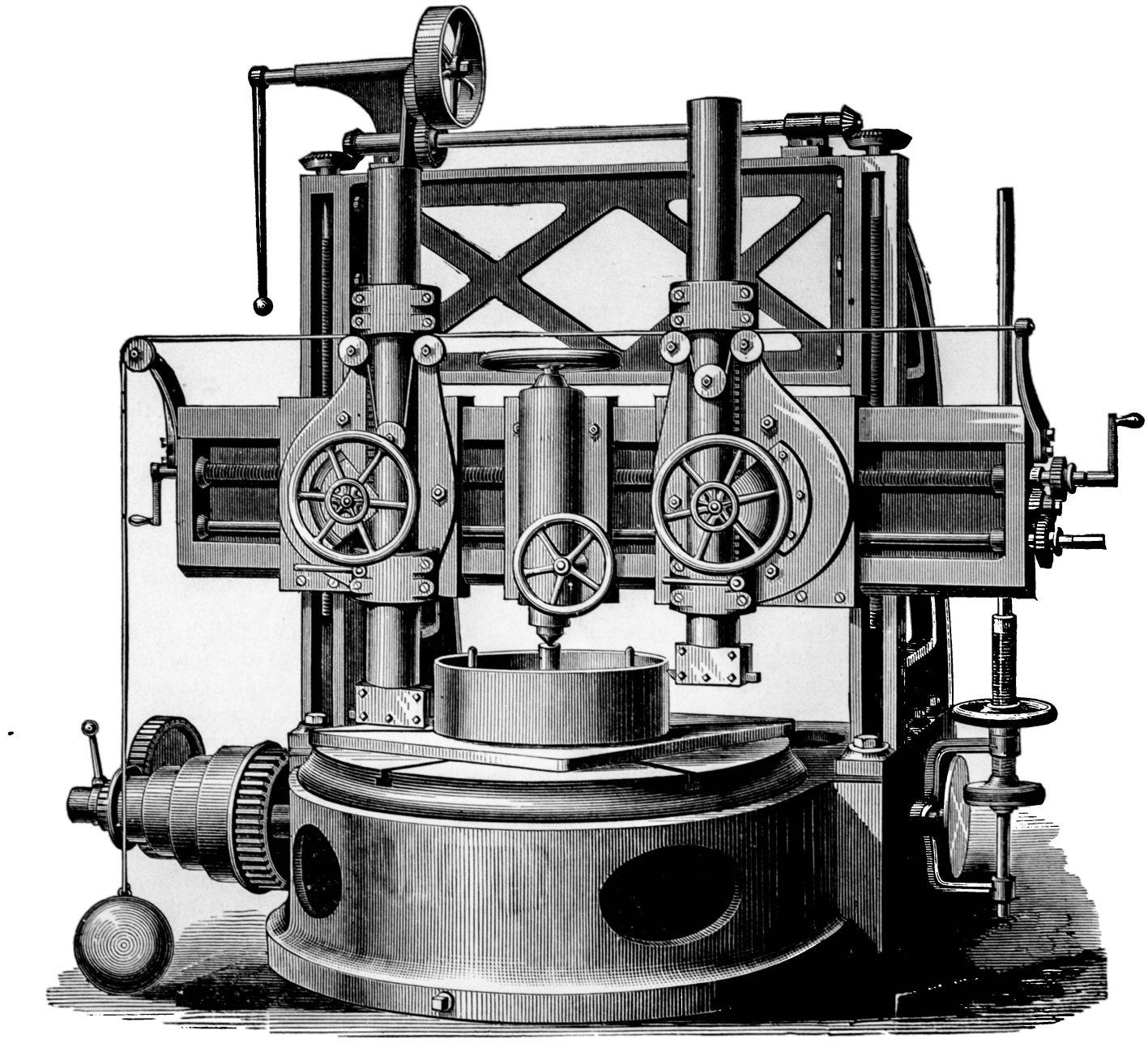

Fig. 725.

chuck plate as well as that of the work overhangs a journal of comparatively small diameter, and is therefore more subject to spring or deflection and vibration.

2nd. It will carry two slide rests more readily adjustable to an angle, and more readily operated simultaneously, than a lathe slide rest.

3rd. It is much more easy to chuck work on a boring mill table than on a lathe, because on the former the work is more readily placed upon the table, and rests upon the table, so that in wedging up or setting any part of the circumference of the work to the work table, there is no liability to move the work beneath the other holding plates; whereas in a lathe the work standing vertical is apt when moving or setting one part to become unset at other points, and furthermore requires to be held and steadied while first being gripped by the chucking dogs, plates, or other holding devices.

Figs. 725, 726, 727, 728, and 729 represent the design of the Niles Tool Works (of Hamilton, Ohio), boring and turning mill. In this design provision is made to raise the table so that it takes its bearing at the centre spindle only when used upon small work where a quick speed of rotation is necessary, or it may be lowered so as to take its circumferential bearing for large heavy work where slower speeds and greater pressure are to be sustained.

The bearing surfaces are, in either case, protected from dust, &c., and provided with ample means of lubrication. Each tool bar is so balanced that the strain due to the balancing weights is in a line parallel to the bar axis in whatever position and at whatever angle to the work table the bar may be set. This prevents the friction that is induced between the bar and its bearings when the balancing strain is at an angle to the bar axis, and consequently pulls the bar to one side of or in a line to twist the bar. The bar is therefore more easily operated, and the feed gear is therefore correspondingly relieved of strain and wear.

The general construction of the machine is shown in Fig. 725. It consists of a base or bed, affording journal bearing and support to a horizontal work table, rotated by devices carried upon the bed. To each side of the bed are attached uprights or standards, forming a rigid support to a cross slide or rail for the two sliding heads carrying the tool bars.

The various motions of the machine are as follows: There are 16 speeds of work table, 8 with the single, and the same with the back gear. The cross slide is capable of being raised or lowered, to suit the height of the work, by an automatic motion. Both tool rests are capable of hand or automatic feed motion at various rates of speed, in a line parallel to the surface of the work table. Both are also capable of automatic or hand feed motion, either vertically or at any required angle to the work table, and have a quick return motion for raising them, while each may be firmly locked while taking radial or surfacing cuts, thus preventing spring or vibration to the tool bar. In addition to this, however, there is provided, when required, a tailstock, carrying a dead centre after the manner of a lathe, so that the work may be steadied from above as well as by the work table. In Figs. 726 and 727 are shown the devices for raising the work table and those for actuating the feed screws and the feed rod; thus operating the sliding heads horizontally and the tool bars vertically. A is the base or bed supporting the work carrying table B′, and affording its spindle journal bearing at D′. A step within and at the foot of D′ rests upon the wedge F′ so that when the wedge is caused to pass within D′ it lifts the step, which in turn lifts the table spindle, and hence the table, sufficiently to relieve its contact with the outer diameter of the bed. F′ is operated as follows: The lever G′ is pivoted at E′ and carries at its upper end a nut H′, operated by a screw on the end of the bolt I′; hence rotating I′, operates wedge F′.

For operating the automatic feed motions, *f* is a disc upon a shaft that is rotated by suitable gears beneath the work table; *g* is a disc composed of two plates, having a leather disc between them, the perimeter of the disc having sufficient frictional contact with *f* to cause *g* to rotate when *f* does so; *g* drives the vertical spindle *i*, which has a worm at J′ driving a worm-wheel which rotates the gears upon the feed spindles V, F, W, in the figures; *f* rotates in a continuous direction, but the spindle *i* is caused to rotate in either direction, according to whether it has contact with the top or bottom of the face of *f*, it being obvious that the motion of *f* above its centre is in the opposite direction to that below its centre of rotation. The means of raising and lowering *g* to effect this reversal of rotative direction is as follows: It is carried on a sleeve *g′* which is provided with a rack operated by a pinion that is rotated by means of hand wheel *h*; hence, operating *h* raises or lowers *g′*, and therefore *g*; *h′* is a hand wheel for locking the pinion, and hence detaining the rack (and therefore *g*) in its adjusted position. This design is an excellent example of advanced American practice for obtaining a variable rate of feed motion in either direction, it being obvious that *g*, being driven by the radial face of *f*, its speed of rotation will be greater according as it is

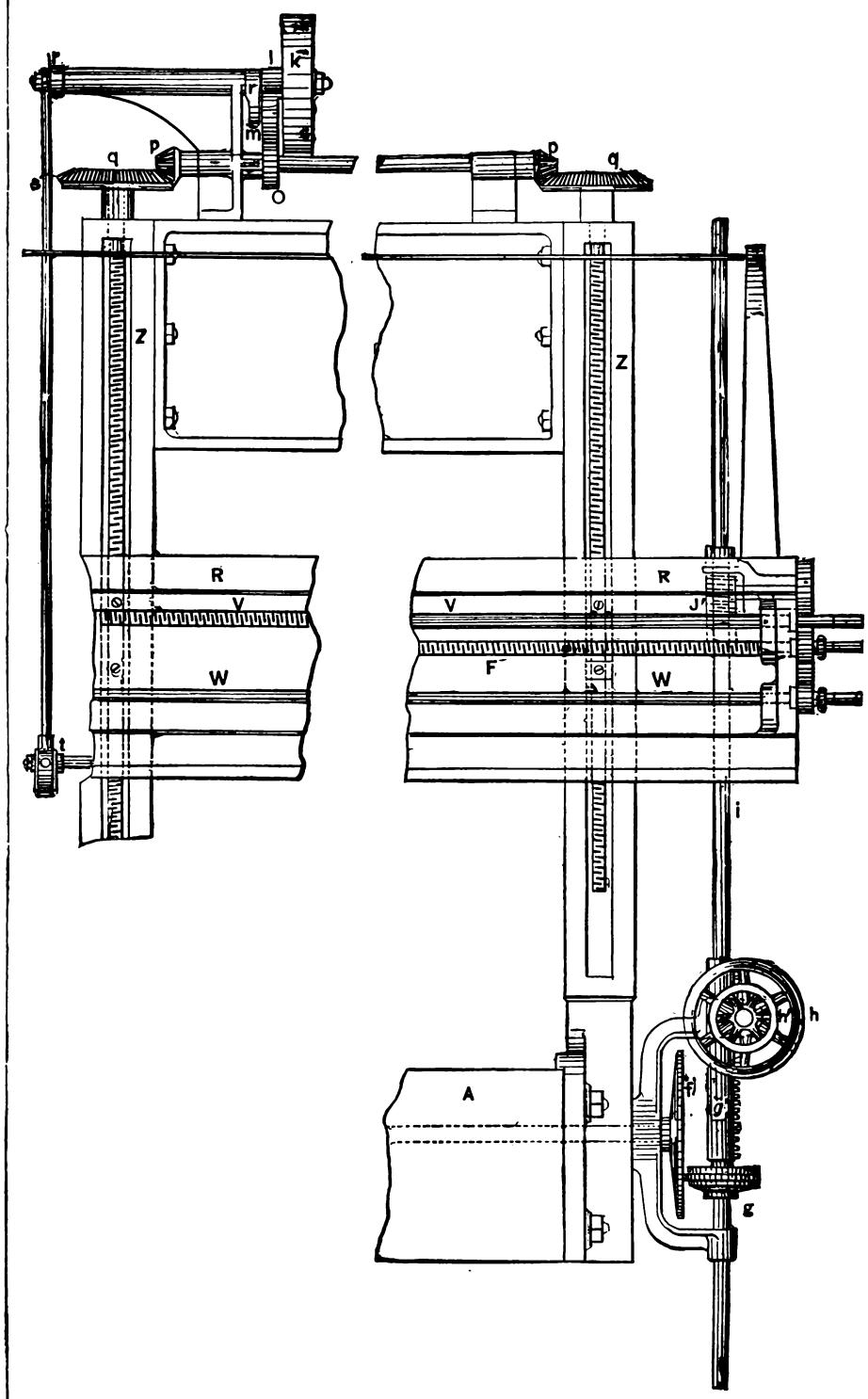

Fig. 726.

nearer to the perimeter of *f* and less as it approaches the centre of *f*, at which point the rotary motion of *g* would cease. Here, then, we have a simple device, by means of which the direction and rate of feed may be governed at will with the mechanism under continuous motion, and conveniently situated for the operator, without his requiring to move from the position he naturally occupies when working the machine.

The means of raising or lowering the height of the rail R on the side standards Z are as follows: K is a pulley driven by belt from the countershaft and operating pinion *l*, which operates pinion *n*, driving *m*. O is a gear on the shaft driving the pinions *p*, *p*, which operate the gears *q*, *q*, on the vertical screws which engage with nuts attached to R; *m* and *n* are carried on a bell-crank *r* pivoted on the shaft of pulley K. Pinion *n* is always in gear with pinion

l, and pinion *m* is always in gear with pinion *n* (and not with pinion *l*). With the bell-crank in one position, motion passes from *l* to *n* and to O; but with it in the other position, motion passes from *l* to *n*, thence to *m*, and from it to O. The motion of *m*, therefore, is always in a direction opposite to that of *n*; hence O, and gears *p* and *q*, may be operated in either direction by regulating which of the two gears *n*, *m* shall drive O, and this is accomplished as follows: The bell-crank *r* is connected by an arm to rod *s*, and the latter is connected by a strap to an eccentric *t*, operated by the handle shown. When this handle stands horizontally, both *m* and *n* are disengaged from pinion O; but if the handle be raised, rod *s* is raised, and *m* is brought into gear with O. If, however, it be lowered from the horizontal position, *n* is brought into gear with O, and *m* becomes an idle wheel.

There are two feed screws—one for operating each boring bar-head, and a spindle for operating the vertical feeds of the bars in the sliding heads. Fig. 728 shows the arrangement for engaging and disengaging the feed nuts of these heads. A is the slide that traverses the rail. It carries a nut made in two halves, N and N', which are carried in a guide or slide-way, and which open from or close upon the screw F when the handle O is operated in the necessary direction. Each half of the nut is provided with a pin projecting into eccentric slots *x* in the face of a pivoted plate (shown dotted in), to which the handle O is attached. W, W represent bearings for the vertical feed

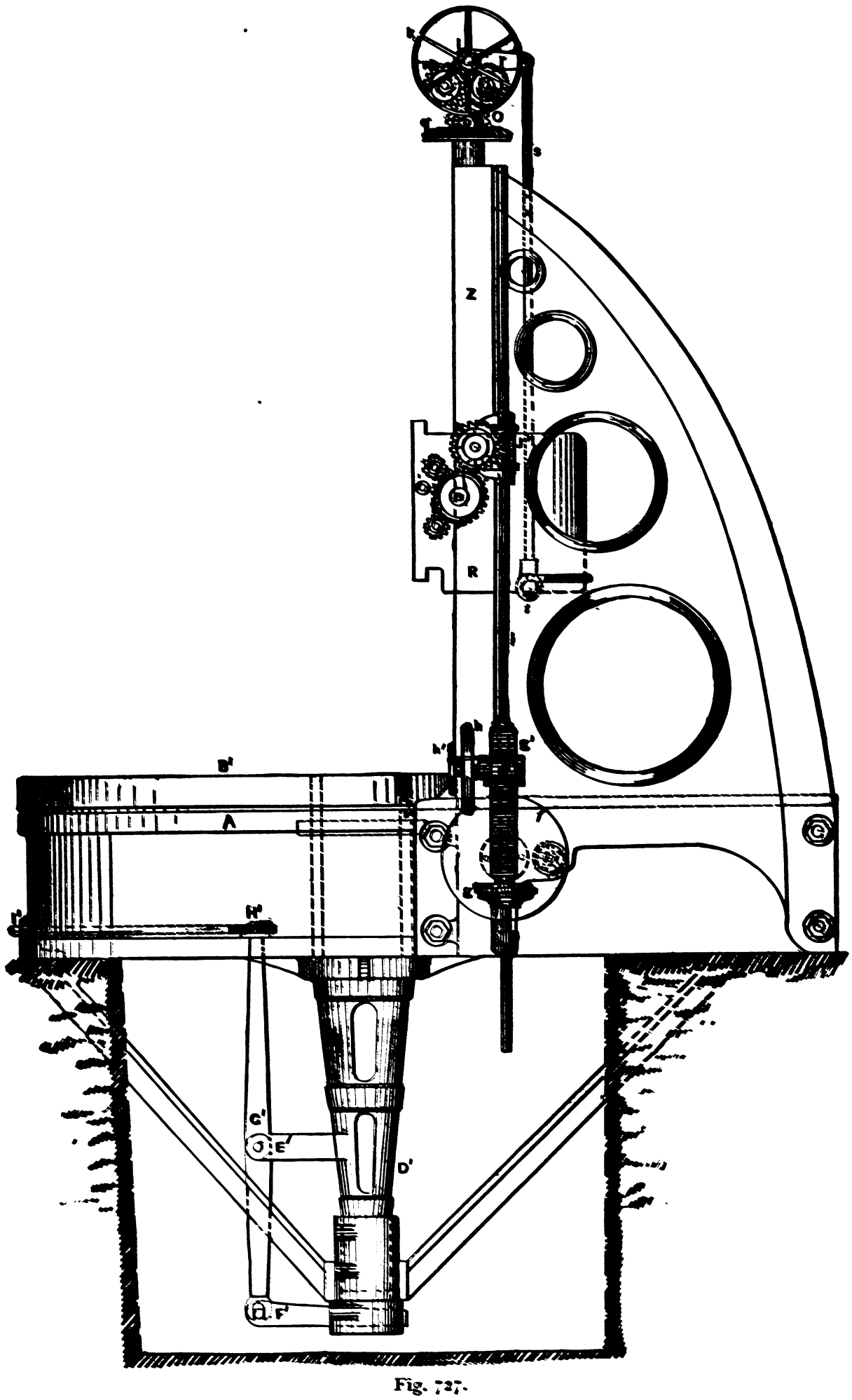

Fig. 727.

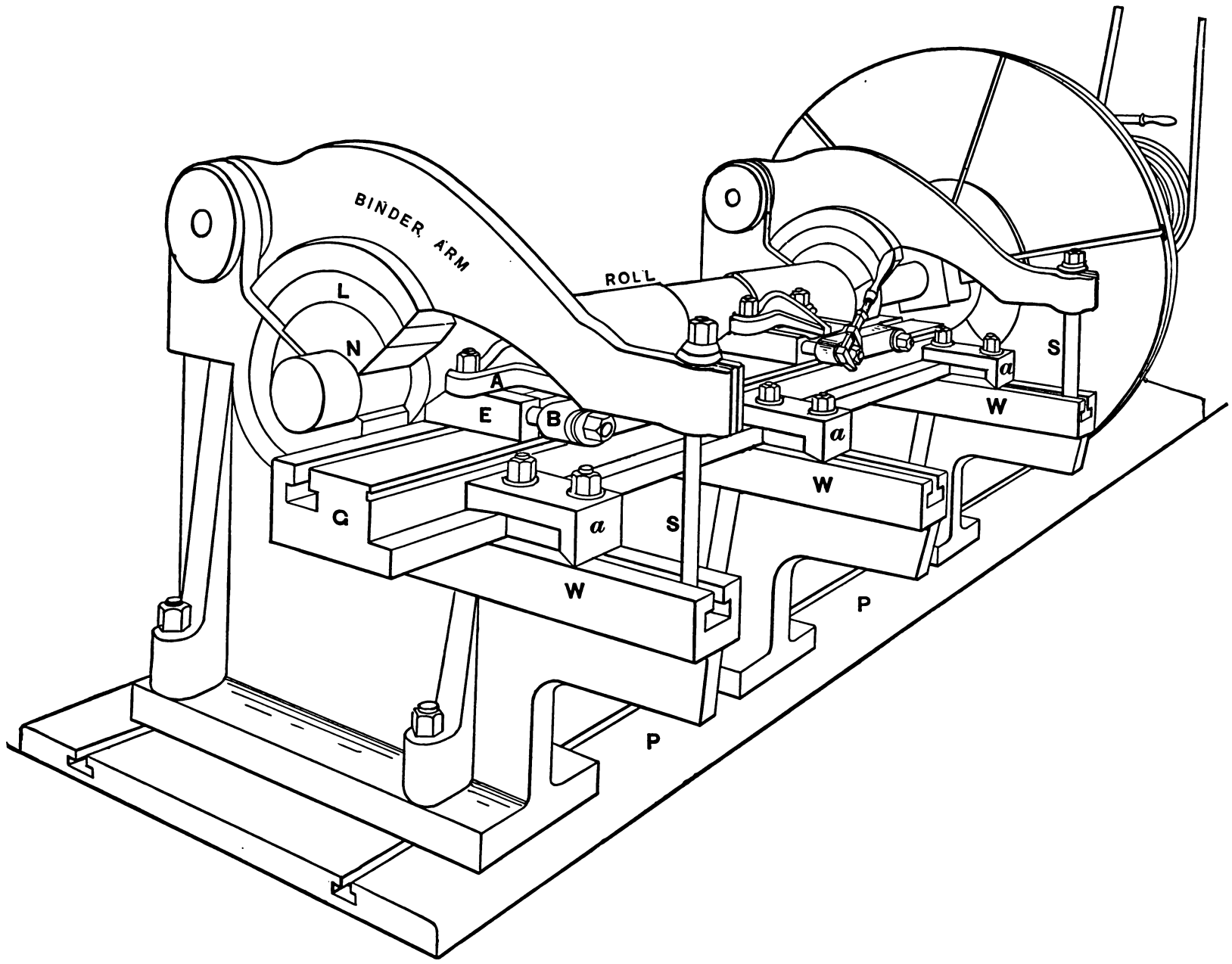

Fig. 730.

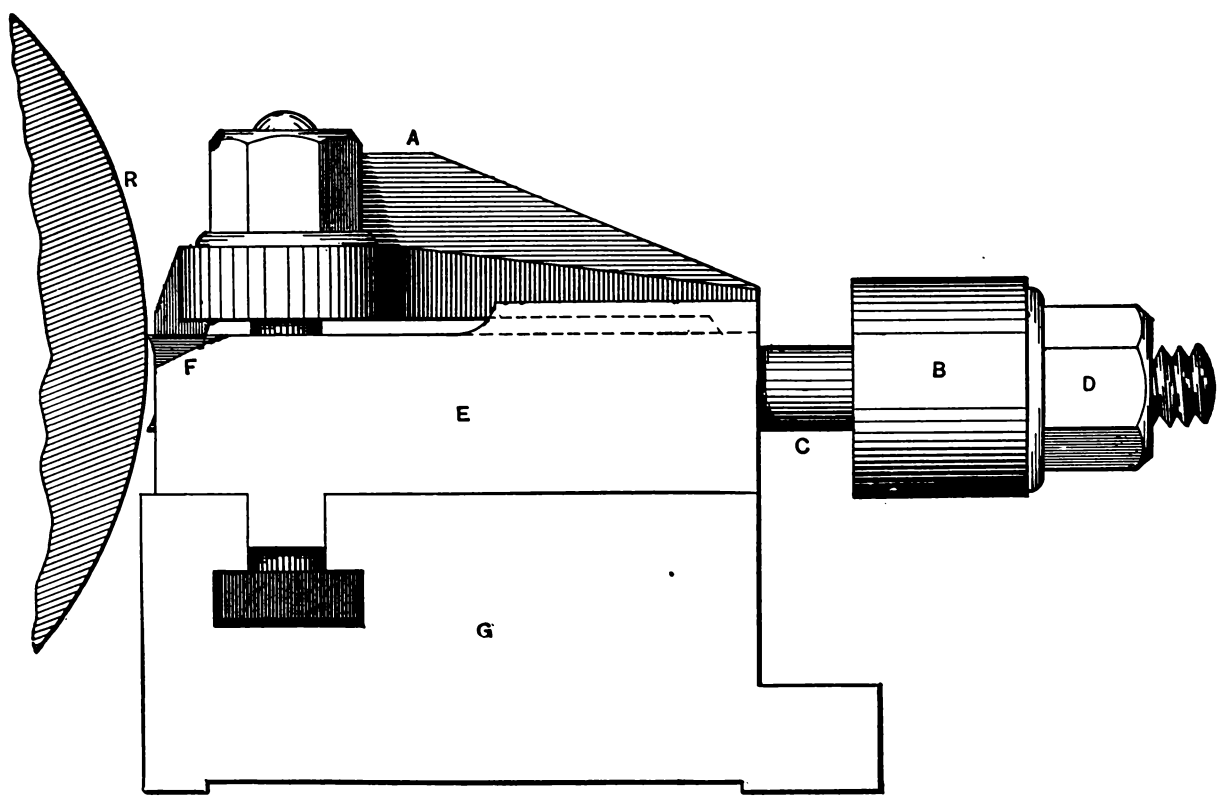

Fig. 731.

spindle W in Fig. 726. *a* is the annular groove for the bolts *b* in Fig. 729.

For a quick hand traverse for the head the ratchet, P is provided, operating a pinion *s*, which engages with a rack T, running along the underneath side of the cross-rail R. To adjust the fit of A to the rail the gibs *y* and *y'* and the wedge *x* are employed.

Fig. 729 represents the automatic feed motion within the head for operating the tool bars vertically. R is the cross rail on

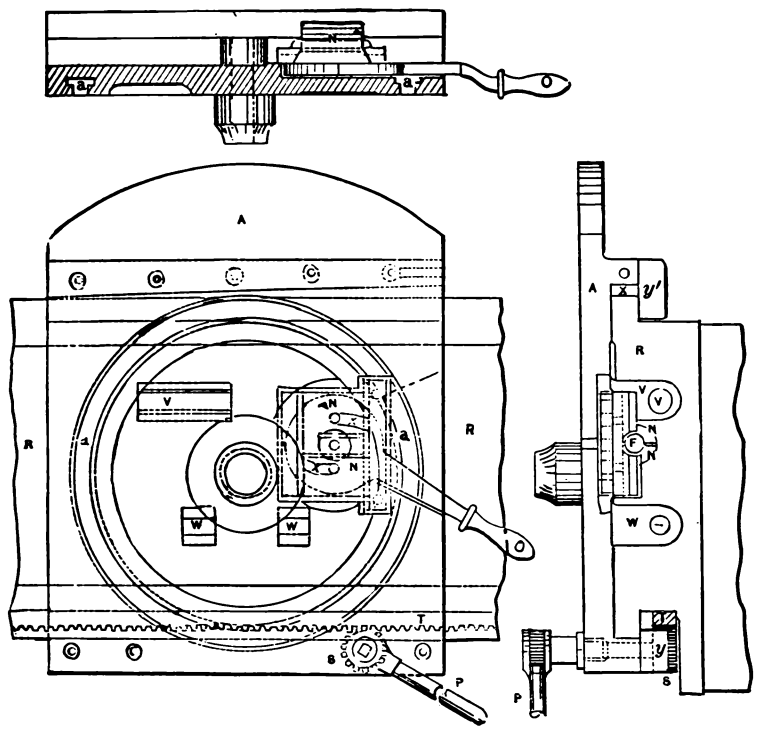

Fig. 728.

which slides A carrying B, and permitting it to swivel at any angle by means of bolts *b*, whose heads pass within an annular groove, *a* in A. In B is carried the boring bar G, having the rack shown. P is a pinion to operate the rack. W is the feed-rod driving the worm H, which drives the worm-wheel I. This worm-wheel is provided with a coned recess, into which the friction plate C fits, so that when the two are forced together rotary motion from I is communicated to C, and thence to C' (which is a sleeve upon C), where it drives pinion P by means of pin P'. I rotates upon and is supported by the stud J, which is threaded into C^2 (the latter being also a continuation of C); hence when hand-wheel K is operated in one direction, C^2 acting as a nut causes J to clamp I to C, and the tool bar to therefore feed. Conversely, when K is operated in the opposite direction, I is released from C, and may, therefore, rotate while C remains at rest. For feeding the tool bar G by hand, or for moving it rapidly, the hand-wheel M is provided, being fast to the sleeve at its section C^2, and, therefore, capable of rotating pinion P. D affords journal bearing to C at its section C'. The chain from the weights which counterbalance the bars G pass over sheaves which are fixed to the piece B in which the bar slides, so that they occupy the same position with relation to the axis of the bar at whatever angle the latter may be set, and thus the counter-balancing weight is delivered upon the bar in a line parallel to its axis. As an example of the efficiency of the machine, it may be mentioned that at the Buckeye Engine Co.'s Works, at Salem, Ohio, a pulley 12 feet in diameter, weighing 8860 pounds, and having a 27-inch face, was bored and turned on one of these machines in 17 hours, taking three cuts across the face, turning the edge of the rim facing off the hub and recessing the bore in the middle of its length for a distance of several inches, the bore being in all 18 inches deep. The machine is made in different sizes, and with some slight variations in each, but the main features of the design, as clearly shown in our engravings, are common to all sizes.

Fig. 730 represents a lathe for turning chilled rolls such as are used for paper calendering machines, and is constructed by the J. Morton Poole Company of Wilmington, Delaware.

In the figure a roll is shown in position in the lathe. The journals of the rolls are first turned in a separate lathe, and form the guide by which the body of the roll is turned in the lathe shown in the figure. The lathe consists of a bed plate P, at one end of which is mounted the driving head. Upon this bed plate are also mounted three standards or vertical frames, to the two end ones of which are pivoted the binder arms shown. These frames hold the bushes at L and N, in which the journals of the roll revolve. They also carry the bar G, secured to the arm W of the frame by clamps *a*, *a*, *a*. Upon the bar G are two slide rests, consisting of a tool rest E, a tool clamp A, and a feed yoke B, which is screwed up by a wrench applied to the nuts as shown on the right-hand tool rest in the figure. The binder arm is adjusted to hold the bushings L N (which are varied to suit the size of the roll journal) a fair working fit upon the roll journals, the bolts S holding the binder arms firmly against the enormous pressure due to the cut. It is obvious that the frames W may be adjusted anywhere along the bed plate P to suit the length of roll to be turned, and that the slide rests may be moved to any required position along the bar G. Further details of the construction are as follows. Fig. 731 is an end, and Fig. 732 is a top view of the tool rest; A is the tool clamp securing the tool to the rest E, R representing a section of the roll, B is the feed yoke, which to put on a cut is screwed inwards by operating the nuts D. The pins C are fast in B, and their ends abut against the tool, which is fed in under the full pressure of the clamp A. The tool is shown at F in figure, and also at F in Fig. 733, which is a view of the rest with the clamp A removed. The form of tool employed is shown in Fig. 734, its length varying from five to six inches. As the tool feeds in and does not traverse along the roll it is obvious that it cuts along its entire length, the cuttings coming off like a bundle of fine ragged needles.

When the tool has been fed in cutting the roll to the required diameter the rest is moved along the bar G, a distance equal to the length of the tool, and the operation is repeated until the full length of the roll has been turned. It is obvious that to feed

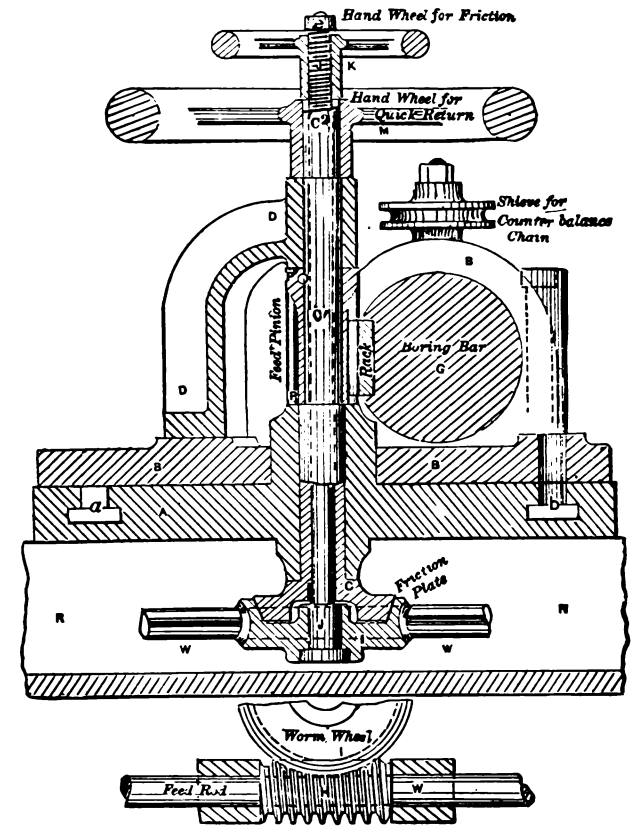

Fig. 729.

the tool in parallel, both nuts D of the tool rest are operated. The tool is held as close in to the rest as the depth of cut to be taken will permit, and is used at a cutting speed varying from about $2\frac{1}{3}$ feet to 5 feet per minute according to the hardness of the roll. The tool has four cutting edges, and each cutting edge will carry in at least one cut, and may sometimes be used for a second one. The tools are used dry and the amount of clearance is just sufficient to clear the roll and no more.

The rolls are driven by a socket bolted to the lathe face plate, and containing a square hole, in which fits loosely the square end of the roll. The object of this arrangement is to permit the roll

to be guided entirely by the bearings in which it rotates, uninfluenced by the guiding effect that accompanies the use of centres in the ordinary method of turning.

Fig. 735 represents a lathe designed and constructed by the ordinary lathe carriage and slide rest, hence the work may be more easily chucked and examined, while in the case of work requiring to be ground together, while one part is in the chuck, the trouble of moving the slide rest out of the way is entirely obviated.

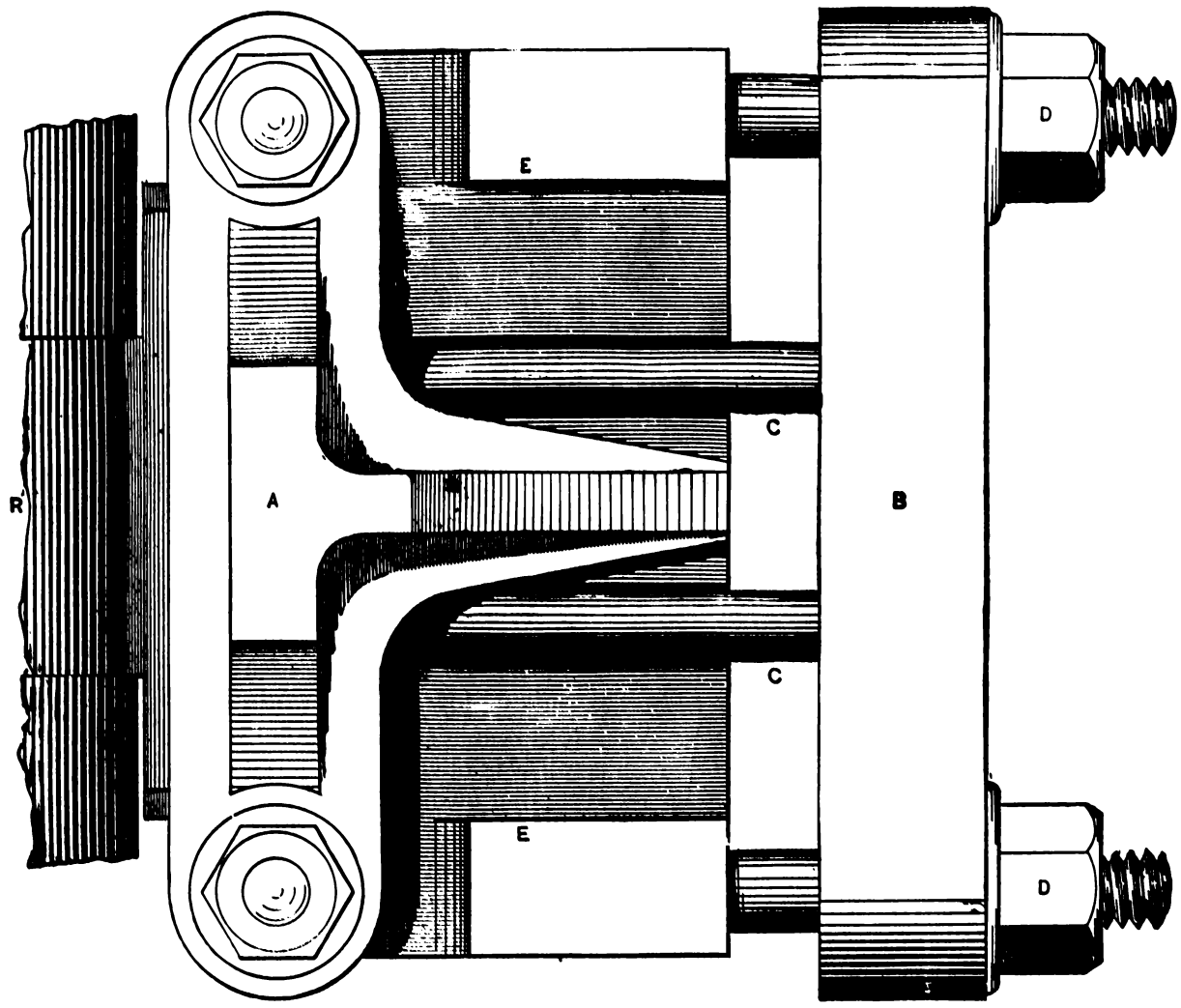

Fig. 732.

American Tool and Machine Company, of Boston, Mass. This class of lathe is strictly of American origin, and has become the most important tool in the brass finishing shop.

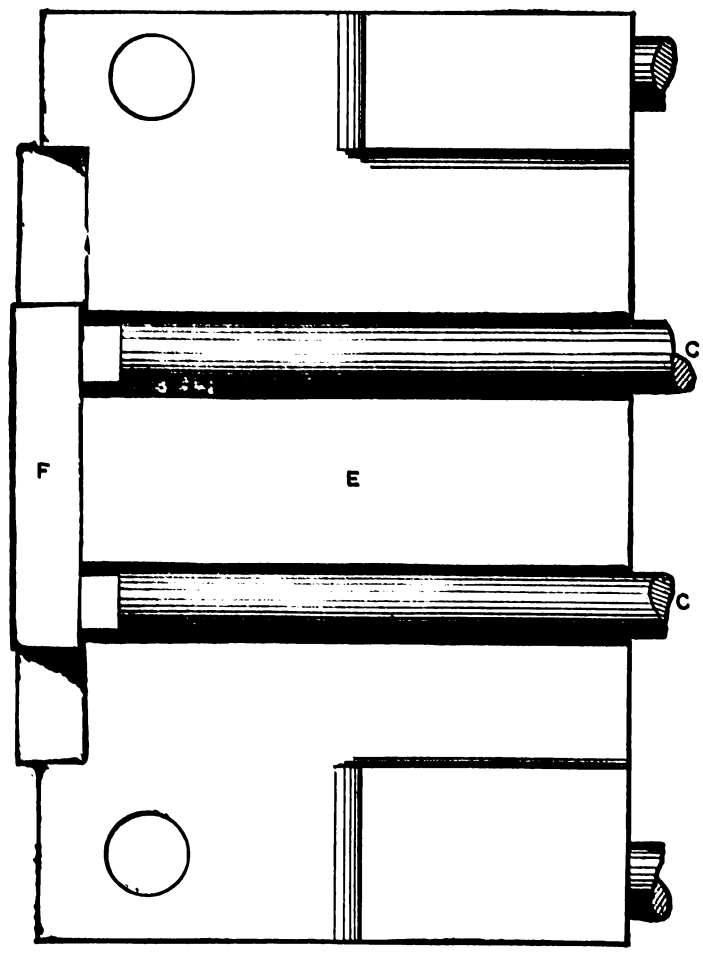

Fig. 733.

In its design the following advantages are obtained :—

1st. The front of the lathe is entirely unobstructed by the

2nd. In place of the single cutting tool carried in a slide rest and of the tailstock of the ordinary lathe, there is provided, what is known as a turret, or turret rest, carrying 6 tools, each of which can be successively brought into action upon the work by the simple motion of a lever or handle.

3rd. The rest for traversing single pointed screw cutting tools

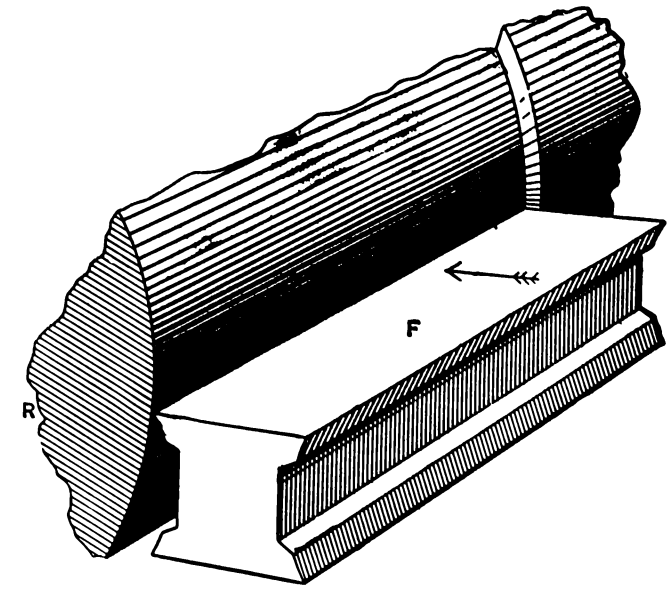

Fig. 734.

or chasers (for internal threads) is at the back of the lathe where it is out of the way.

4th. In place of the usual change wheels required to operate the lead screw, the chasing bar is operated by a single threaded collar or hob, which is more easy of application and removal.

5th. The slide rest carrying the screw cutting tool is capable of such adjustment, that the tool will thread successive pieces of duplicate work to an exactly equal diameter, so as to obviate the

necessity of either measuring or trying the work after the tool has been accurately set for the first piece.

6th. When the threading tool has traversed to the end of its cut it may be lifted from the same and pulled back by hand, ready to take a second cut, thus avoiding the loss of time involved in traversing it back by a lead screw or its equivalent.

7th. Each of the tools in the turret may be set so as to operate to an equal depth and diameter upon successive pieces of work.

In the particular lathe shown in our example, there is another and special advantage as follows :—

In lathes operating upon small work and upon the softer metals, as composition, brass, &c., the time occupied in traversing the cutting tool is comparatively short, and from the comparative softness of the metal the speed of lathe rotation is quick, and the tool motions must be correspondingly quick. In addition to this the work being so much more quickly performed, changes and readjustments of the parts are necessarily more frequent, hence the rests traverse the bed more rapidly as well as more frequently and the wear of the Vs on the lathe, and the corresponding V-grooves in the tool rest, slide rest, or turret, is increased ; as a result, tools carried in the tailstock or the turret, as the case may be, which tools should for a great many purposes stand axially true with the live spindle, stand below it, and hence instead of boring a hole equal to their own diameter, bore one of larger diameter. In the case of tools, however, which, as in the case of drills, endeavour to find their own centre in the work, this action takes place to some extent as the tool enters the work, and as a result the hole is made a taper, whose largest diameter is at the mouth. This induces another evil in that it dulls the advance edge of the drill flute, and wears away the clearance which is of such vital importance to the free action of the drill.

The manner in which these advantages are obtained is as follows :—

In place of the ordinary tailstock a back head is provided which has a cross slide operating after the manner of the ordinary slide rest ; this carries an upper slide, thus forming a compound slide rest. On the top of this rest is carried a rotating head or turret head, serving the same purpose as the head shown in Fig. 694, and carrying a series of tool holders. These tool holders may be operated by the feed screw of the compound rest, or may be operated by the hand lever shown standing horizontally. In addition to the ordinary back gear for reducing the live spindle speed there is provided on the live spindle a second small pinion, driving at the back of the lathe head a shaft, on the left-hand end of which is a seat for collars or hobs, operating a bar running along the back of the lathe, and forming what is termed the screw apparatus, whose operation is as follows :—

This bar carries the slide rest shown, a handle or lever for partly rotating the slide rest, spanning the bed of the lathe. When this handle is lifted, the bar at the back of the lathe rotates in its journals. On this bar is an arm which carries a segment of a circle, containing a thread corresponding in pitch to the thread on the collar or hob. When the lever is raised the segment moves away from the hob, and the bar may be moved laterally by hand, but when the lever is lowered the arm falls, and the segment comes into contact with the hob thread, which therefore feeds the bar ; all that is necessary for thread cutting is, therefore, to place on the lathe a hob having the required pitch for the thread to be cut, and place in the slide rest a chaser or single-pointed threading tool, and set the tool to the work by means of the slide rest, depressing the lever to cause the tool to feed forward, and elevating it to move the bar back by a lateral hand pressure. To put on successive cuts the slide rest is operated, the lever always being lowered till it meets the surface of the lathe bed. To cause the slide rest to cut successive threads to the same diameter, a suitable stop motion is provided to the slide rest, and when the rest has been operated as far as the stop will permit it, the thread is cut to the required depth and diameter.

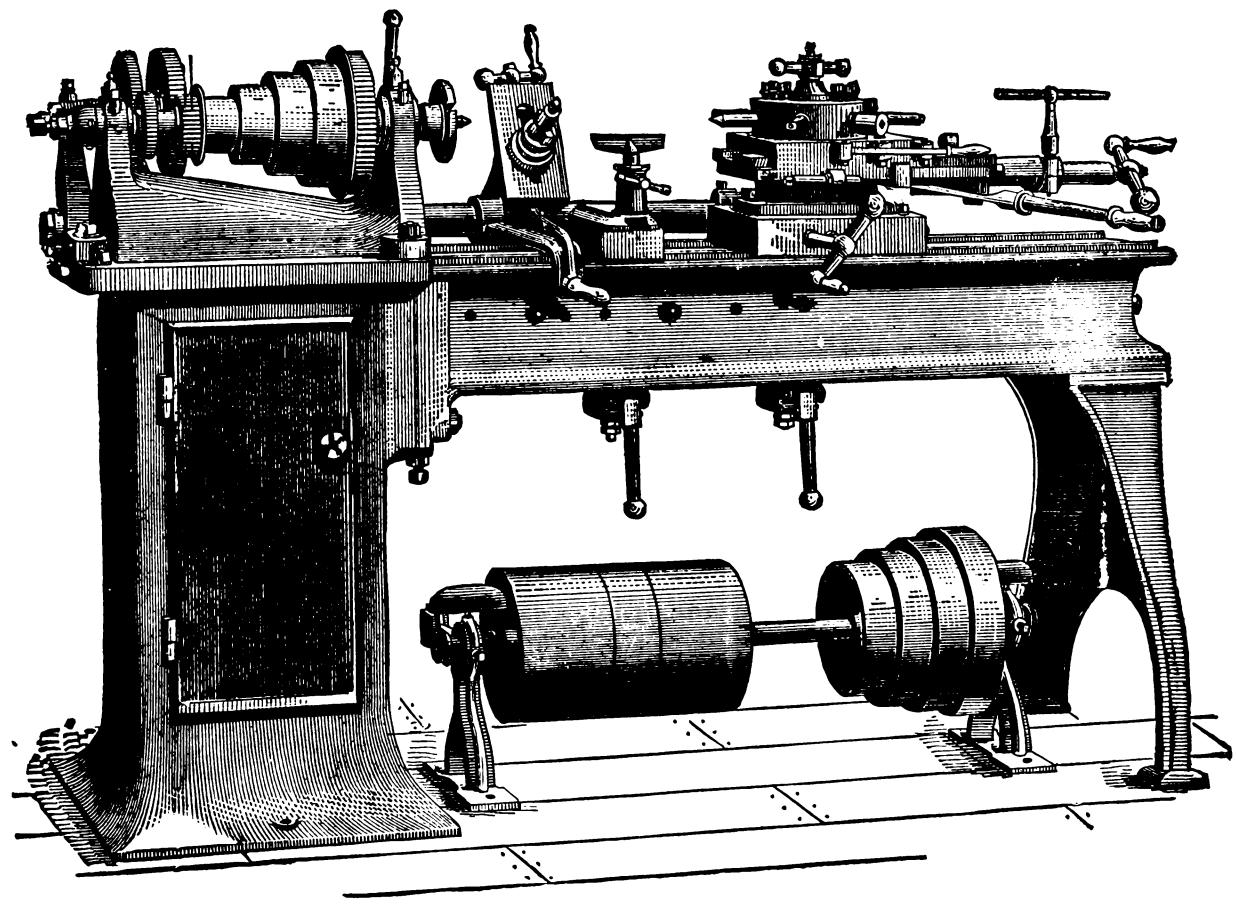

Fig. 735.

A stop motion is also provided to the lateral motion of the turret, so that the tools being set to enter the work to their respectively required distances, all pieces will be turned to equal depths or lengths.

To enable the centres of the tool holders to maintain true alignment with the live spindle, notwithstanding the wear of the lathe bed and back head, the bed is made in two parts. One of them carries the headstock, and on the vertical face of this part is a slide in which the end of the second part fits, so that by means of adjusting screws the second part may be elevated to effect the true alignment when necessary.

Fig. 736 represents a square arbor brass-finisher's lathe. The object of the square arbor or tail spindle is to enable it to carry cutting tools in place of the dead centre. A cross slide is provided to the tailstock, and upon this slide the head of the tailstock is pivoted so as to bore taper holes ; the tailstock thus virtually becomes a compound slide rest. This lathe is provided at the back of the bed with a bar carrying a slide rest, operated in the same way and for the same purpose as that described with

reference to Fig. 735. Both these lathes are furnished with separate compound slide rests, and with a hand rest.

When work of considerable weight requires to be bored with holes of moderate diameter, it is more convenient that it remain fixed upon a table, and that the boring tools rotate, and a cone spindle is a gear-wheel gearing into a pinion, which drives the lower shaft shown behind the back bearing, and on this shaft are two pinions. One drives the upper feed cone, shown at the back of the back bearing, which cone connects by belt to the feed cone below, which operates a traverse feed for the work

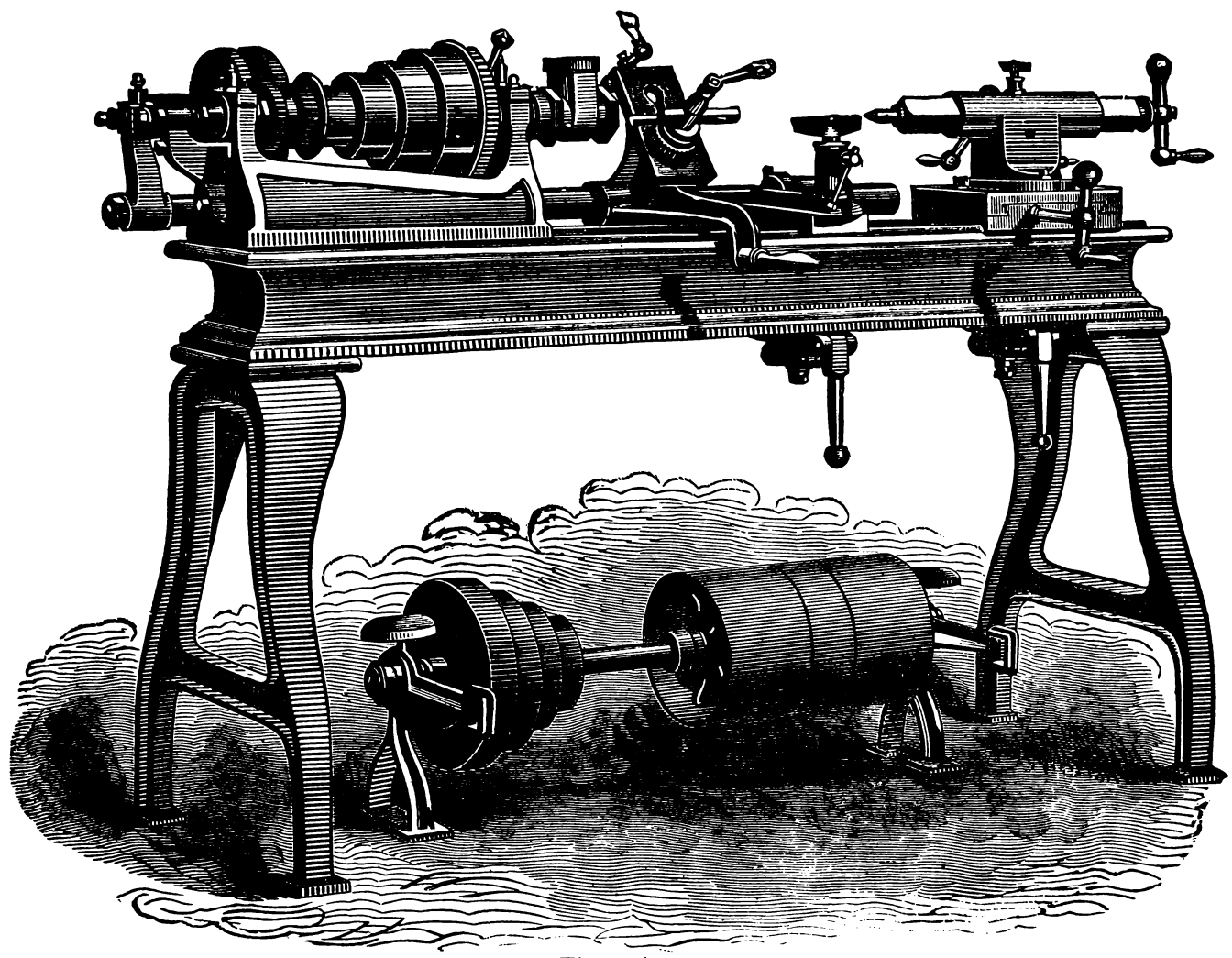

Fig. 736.

machine constructed by the Ames Manufacturing Company for this purpose is shown in Fig. 737; a standard occupies the position of the ordinary tailstock. It carries an horizontal table, or angle plate, on which the work may be chucked. This table is capable of a vertical and a cross shear movement, so that when the work is chucked upon it, holes whose axes are parallel, but situated in different locations upon the same surface, may be drilled or bored by so moving the table as to bring each successive hole into line with the live spindle. The feed motions are as follows :—

At the back of the smallest step on the cone and fast on the table; the other drives the tool holding spindle which passes through the cone spindle. This tool holding or driving spindle is threaded at its back end, passing through a nut which causes it to self-feed from left to right, or in other words, towards the work table. To throw this feed out of operation the pinion on the end of the lower or feed driving spindle is moved laterally out of gear with the pinion driving it.

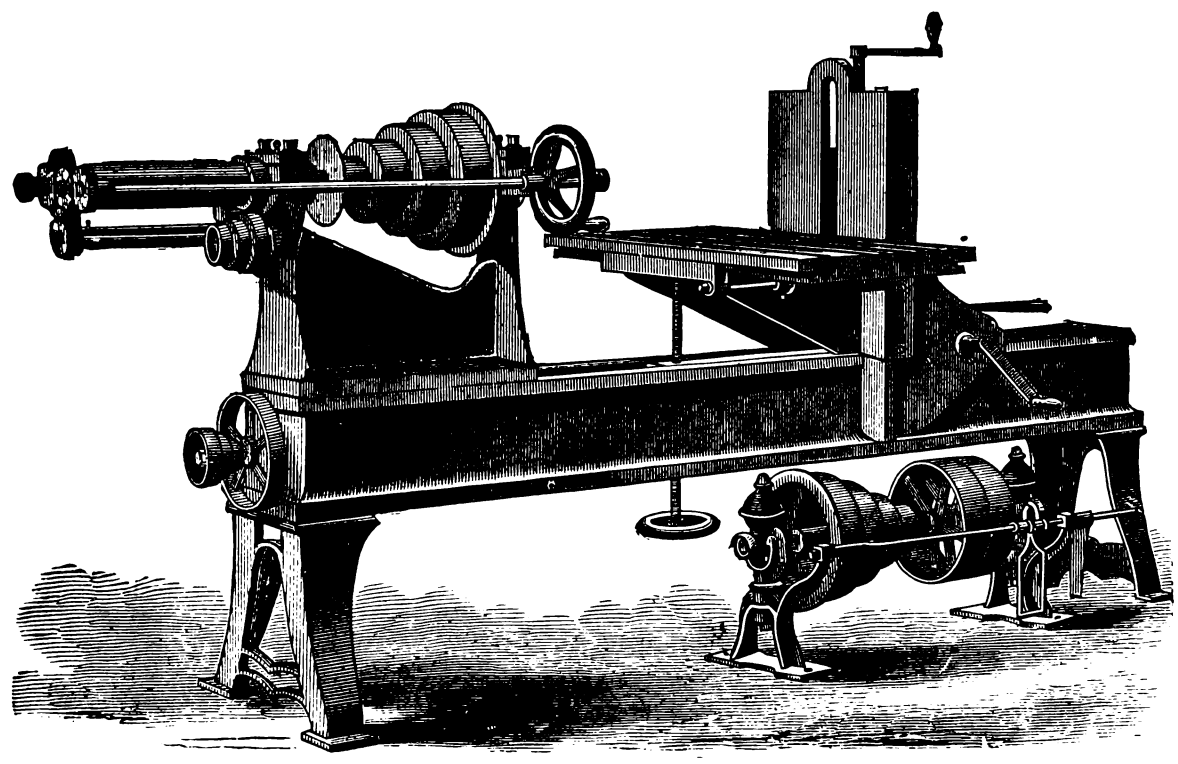

Fig. 737.

To provide a quick hand-feed traverse the shaft or spindle, shown with a hand-wheel, is provided, being connected to the tool driving spindle by gearing.

When employed to operate a boring bar, a bearing to support

the bar at the tail or footstock end may be bolted to the table, such bearing carrying a bushing which may be changed to suit the diameter of the boring bar.

Fig. 738 represents a cylinder boring lathe. D is the driving cone, on whose shaft is the worm W, driving the worm-wheel G, which is fast upon the boring bar *g*, having journal bearing in the standards H and H′, the latter of which must be moved out of the way to get the work over the bar. *h* is a head provided with slots to carry the cutting tools; *h* is a close sliding fit to the bar *g*, and is traversed along *g* as follows:—*g* is hollow and there passes through it a feed screw, which operates a nut on *h*, which nut passes through a longitudinal opening in the bar *g*. At the end of this feed screw is the gear-wheel D. Now fast upon the end of *g*, and therefore rotating with it, is the gear A, driving

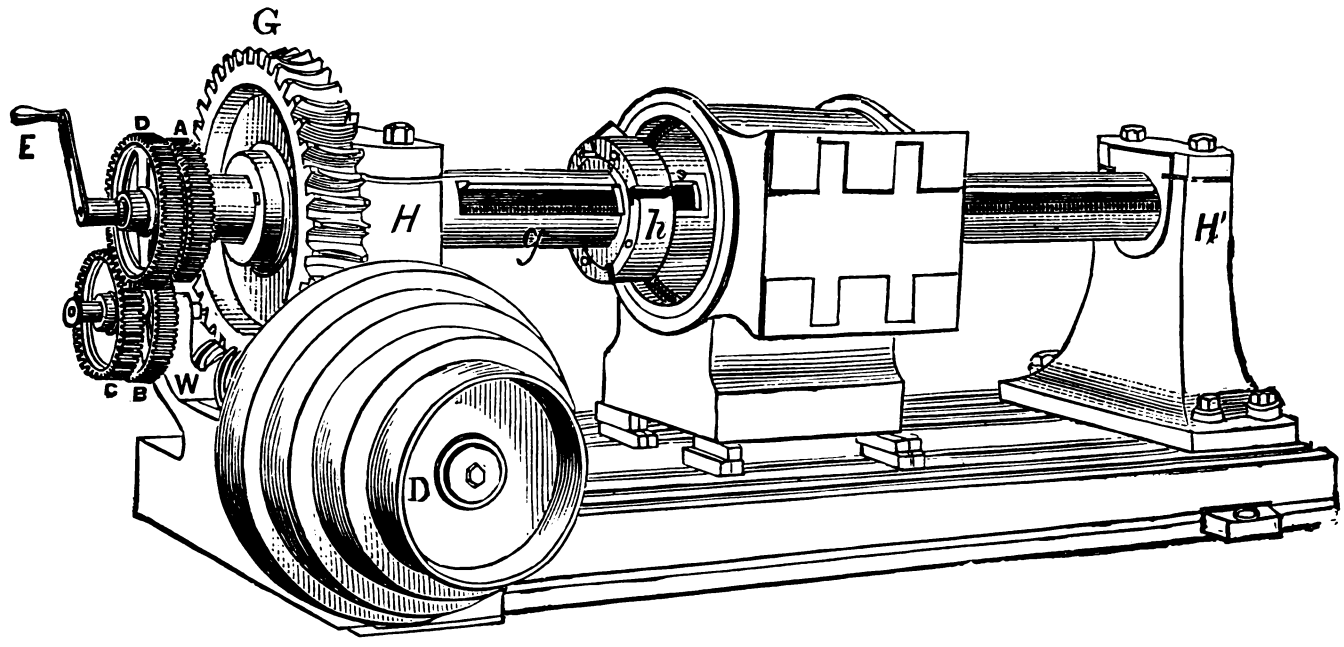

Fig. 738.

gear B, which is fast on the same sleeve as C, which it therefore drives; C drives D. The diameter of A is less than that of B, while that of C is less than that of D; hence the rotation of D is slower than that of A, and the difference in the relative velocities of D and A causes the feed screw to rotate upon its axis and feed the head *h* along the bar. If C be placed out of gear with D, the feed screw (and hence the head H) may be operated by the handle E.

There are several objections to this form of machine, as will be seen when comparison is made with Fig. 739, which represents a special cylinder boring lathe, designed and constructed by William Sellers and Co., of Philadelphia, Pennsylvania. The boring bar is here supported in two heads, and is hollow, the feed screw for traversing the head carrying the boring cutters being within the bar. The feed is effected through the medium of the train of gearing shown at the end. The two face plates shown which drive the boring bar, also carry two slide rests which are used to face off the ends of cylinders while the boring bar is in operation, these slide rests being operated by a star feed, acting on the principle described with reference to Fig. 589. The boring bar in this case being driven from each side of the work the torsion due to the strain of the cut is divided between the two halves of the bar; or in other words, when a boring bar is driven from one end the strain due to the cut falls upon that part of the bar that lies between the boring-head and the point at which the bar is driven; but when the bar is driven from each end then the strain is divided between the two ends, causing a bar of a given strength to operate more steadily and take a heavier cut for roughing, and a smoother one for finishing. A greater advantage, however, is that it gives to the bar a rigidity, enabling it to carry a cutter having a long cutting edge without chattering, thus allowing a very coarse finishing feed, which will finish a bore with less wear to the tool edge (and therefore more parallel) because for a given amount of work the cutting-edge is under duty for a less period of time, the cutting speed remaining the same, or even slower than would be desirable for a fine feed. The driving-cone, which is shown to be below the boring-bar, is so situated to accomplish two objects, which are to operate the two face plates by a shaft having two pinions (within the bed) gearing with the circumferential teeth on the face plates, and to operate at the same time the table (shown on the bed between the face-plates) to which the cylinder is bolted.

In a boring machine it is of the utmost consequence that the bar shall be as free from vibration as possible, while lost motion, or looseness from wear, is especially to be avoided. By carrying the bar in two bearings, as it were, the wear is greatly reduced.

The duty of facing the cylinder ends is sometimes done by facing cutters carried in the head. Such cutters, however, must have a cutting edge equal to the breadth of the surface faced by them, because the cutter cannot be fed radially to its cut. Furthermore, the cut is carried by the bar at a considerable leverage, and as a result it is very difficult indeed to make the radial faces true or even nearly true, the cutter dipping into the softer parts of the iron or into spongy places if there are any. In any event springing away from its cut, resisting it until forced to cut, and then cutting deeper than should be, so that on a finished surface it is often apparent to the eye where the cutter began and left off. When, however, the radial faces are operated upon by a slide rest, as in the Sellers machine, the tool is more firmly held, and may be fed radially to the cut, producing true faces, and saving a great deal of time in making the cylinder cover joints, as well as in the boring and facing operations.

LATHE FOR FACING AND BORING CYLINDERS.—Fig. 740 represents a lathe specially designed for simultaneously boring and

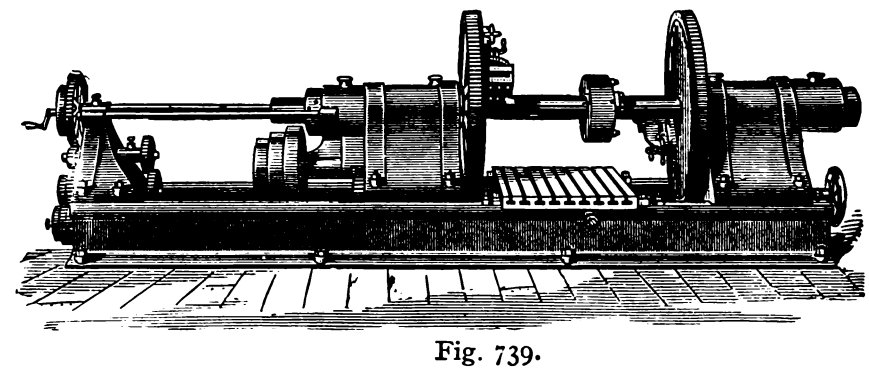

Fig. 739.

facing cylinders. The boring bar is carried in two substantial bearings, the boring tool being carried in a closely fitting sleeve on the bar, which is provided with an automatic, as well as a hand feed, motion. At each end of the bar is provided a slide rest, adjustable upon and revolving with it, a star feed effecting the feed motion. The bar is driven by a worm operating a worm wheel between two substantial bearings, the construction being very rigid for rapid and accurate work.

QUARTERING MACHINE.—Fig. 741 represents a lathe made especially for boring the holes to receive the crankpins of locomotive wheels after the latter are in their places on the crankshaft, the construction of the machine insuring that the crankpins shall

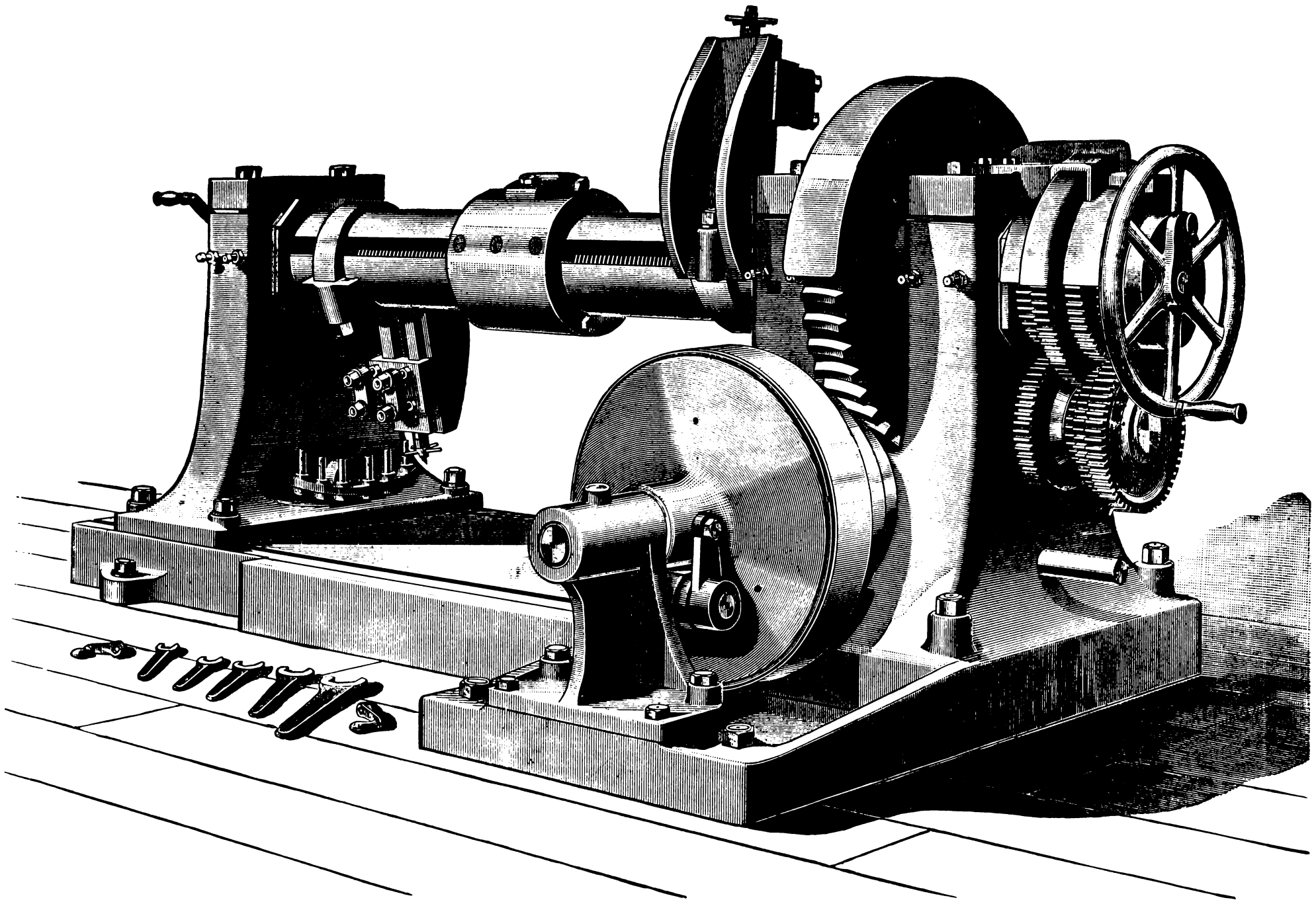

Fig. 740.

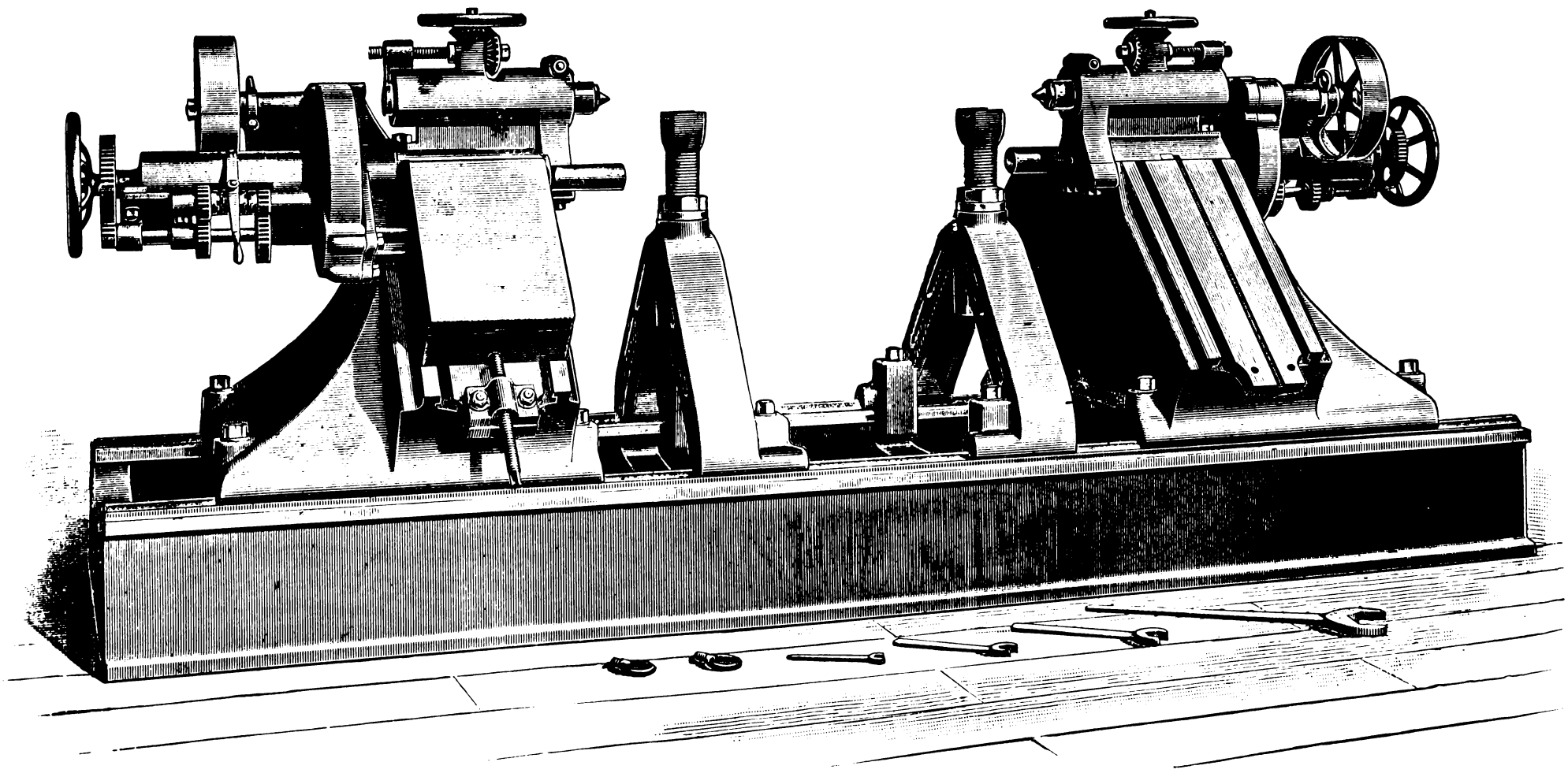

Fig. 741.

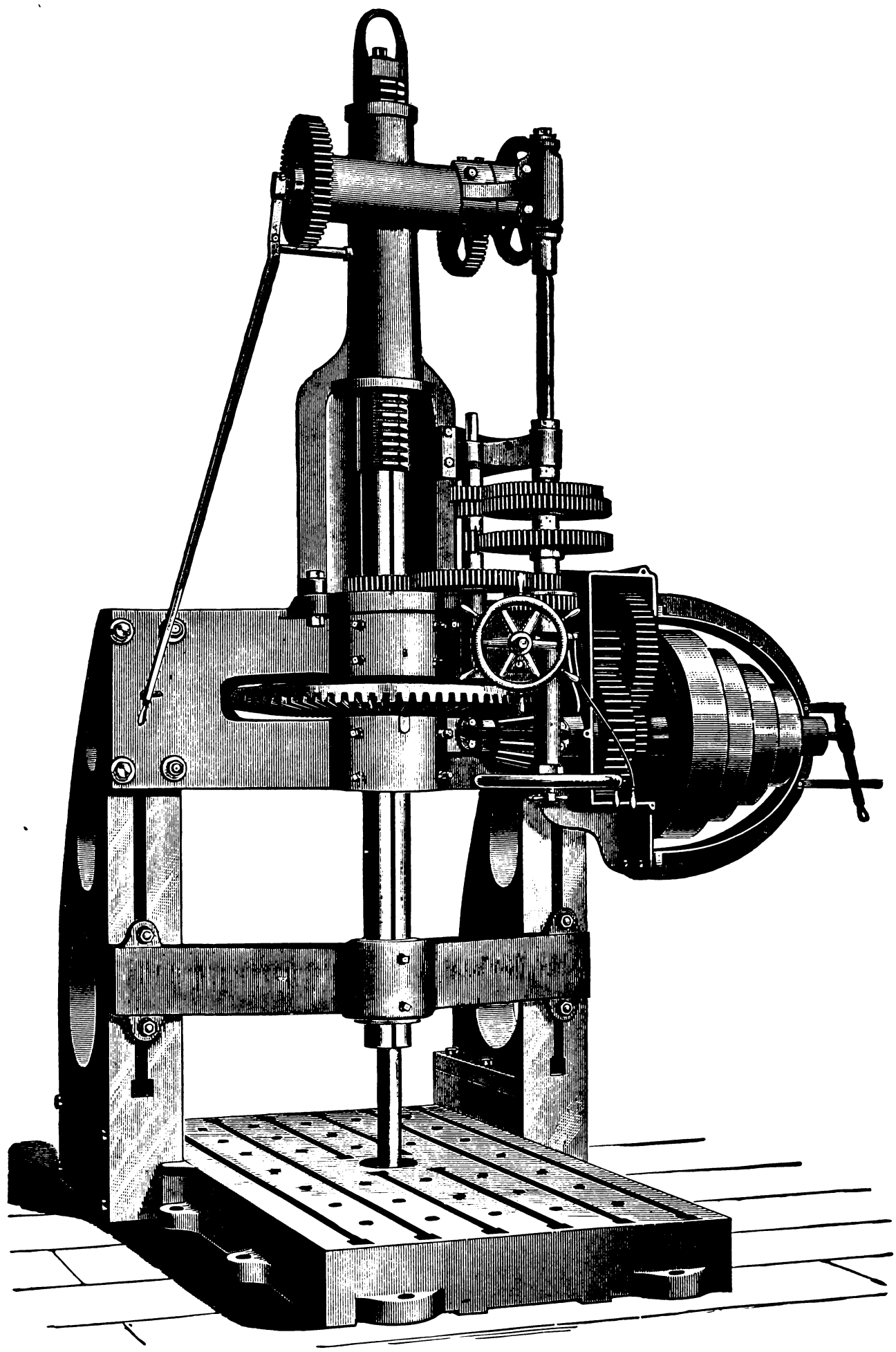

Fig. 742.

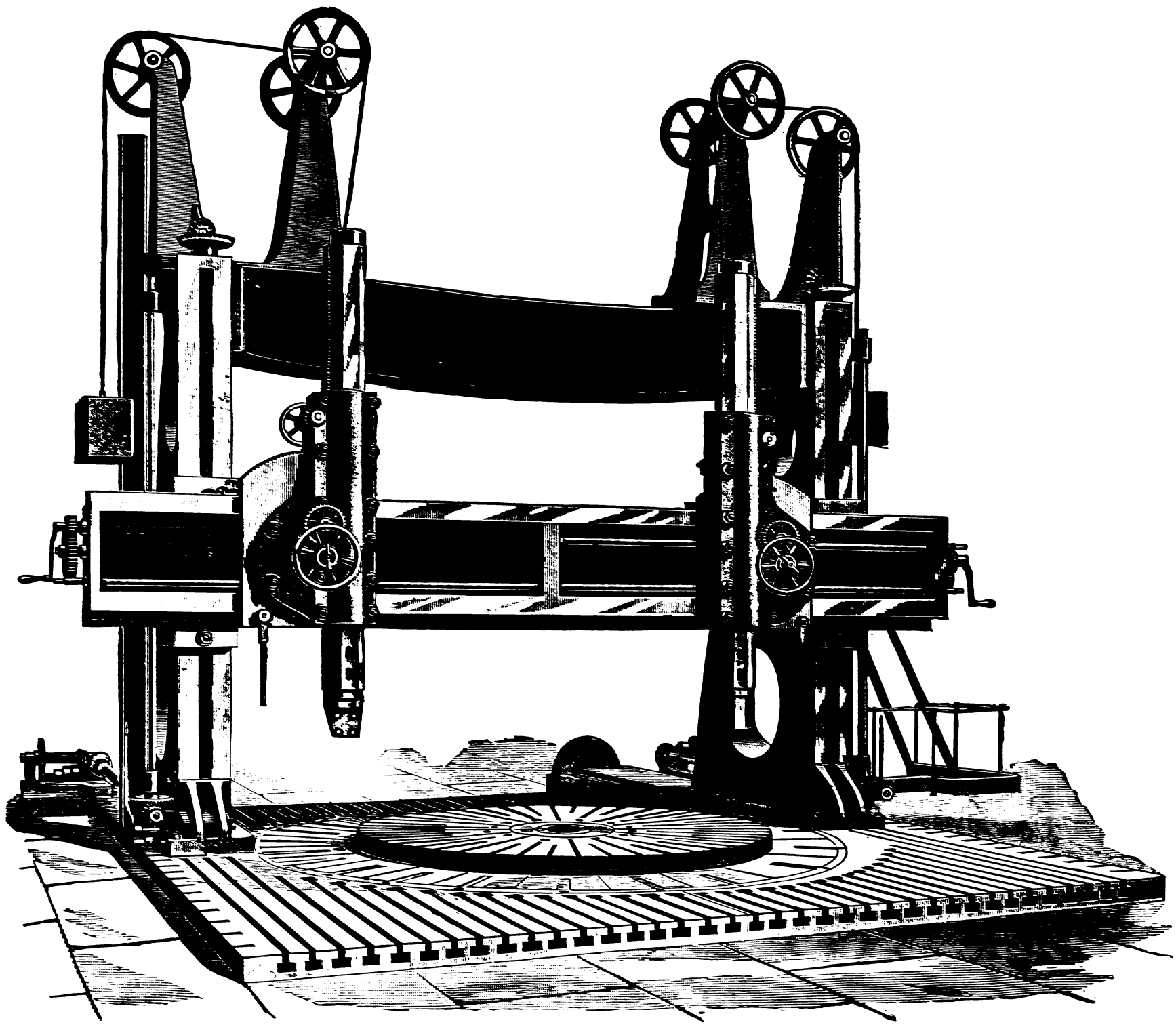

Fig. 743.

stand at a dead right angle one to the other when considered with relation to the centre of the crankshaft. The lathe consists of two similar headstocks, each carrying a slide provided with a boring spindle adjustable for distance from lathe centres, and each with a suitable feed motion. As the slides in this machine may be moved from one side to the other of the heads, it may be used either as a right or left-handed machine.

HEAVY UPRIGHT BORING MACHINE.—Fig. 742 represents an upright boring machine for heavy and rapid work. It is driven by powerful gearing, and has self-acting and independent hand feed. The boring bar may be supported close to the work (to give rigidity) by means of a cross-rail bearing, adjustable in height upon the face of the standards.

VERTICAL BORING AND TURNING MACHINE.—Figs. 743 and 744, illustrate a 20-foot boring and turning mill of modern construction. Each tool bar is, it will be seen, provided with a separate feed screw and feed motion, and is balanced at whatever angle it may be set. The bearing surface for the work table extends beyond the diameter, giving great rigidity, and enabling the carrying of very heavy cuts. A cross rail is adjustable for height upon the uprights, by a self-acting elevating motion.

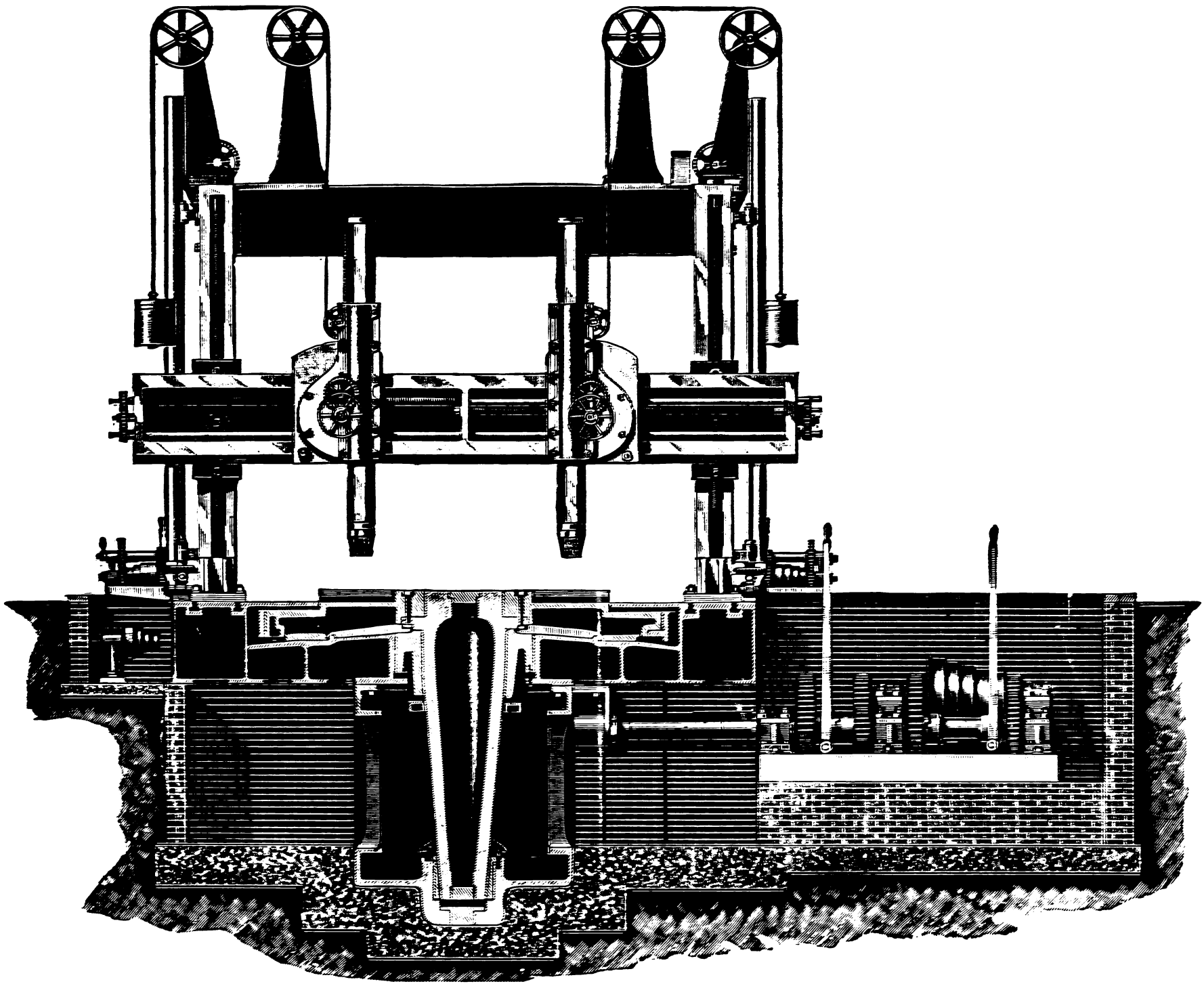

Fig. 744.

CHAPTER IX.—DRIVING WORK IN THE LATHE.

THE devices employed to drive work that is suspended between the lathe centres are shown in the following illustrations.

They are termed lathe dogs, drivers, or carriers. It is to be observed, however, that since the term dog is also applied to a device for holding work to the lathe face plate, as well as to the jaws of chucks, either the term driver or the English term carrier is preferable to the term dog.

Fig. 745 represents a lathe dog, driver, or carrier D, in position to drive a piece of work in the lathe. It is obvious that the work

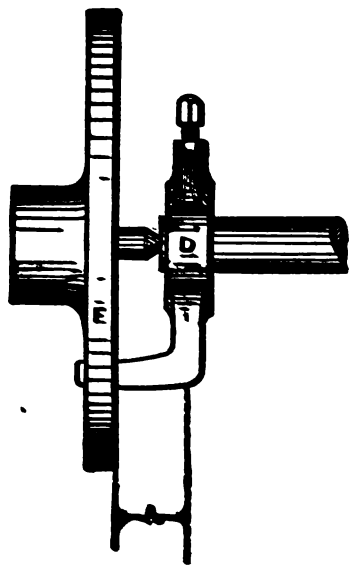

Fig. 745.

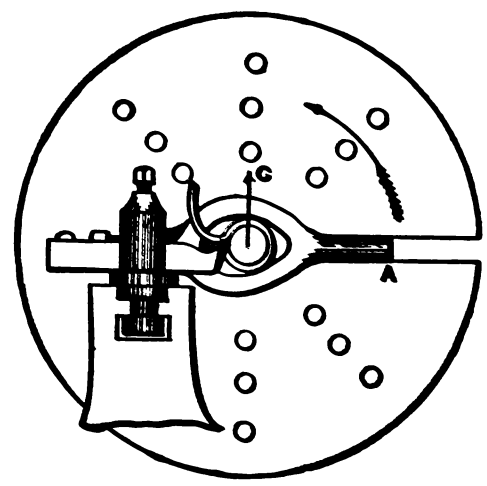

Fig. 746.

is secured within the carrier or driver by means of the set-screw shown. The tail of the driver here shown is bent around to pass within the slot provided in the face plate, a plan which is convenient, but is objectionable, because in this manner of driving the work two improper strains are induced, both of which act to spring or bend the work. The first of these strains is caused by the carrier being driven at a leverage to the work, as shown at A in the figure, which causes the live centre to act as a fulcrum, from which the work may be bent by the strain caused by the cut.

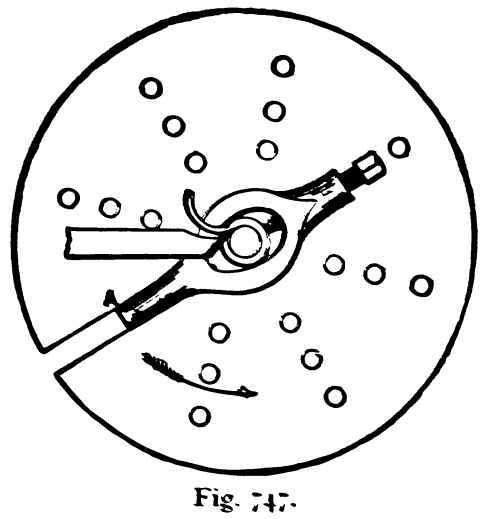

Fig. 747.

The second strain is caused by driving the carrier from one side or end only, and is shown in Fig. 746, where the dog receives the face-plate pressure at the point A, and the cut or resistance being on the opposite side of the work, the leverage of the driving point causes a tendency to lift the work in the direction of the arrow C. The direction of this latter strain, however, varies as the work revolves. For example, in Fig. 747 the dog is shown in position at another point in its revolution, and the point A, where the power is applied to the carrier, is here on the same side as the tool cut; hence there is less tendency to spring the work. It becomes obvious then, that work driven in this manner will be liable to be oval, or out of round, as it is commonly termed.

The methods of overcoming these two sources of error are as follows: Instead of the end of the dog being bent around to pass within the slot in the face plate, as in Fig. 745, the leverage A in that figure may be avoided by the means shown in Fig. 748, in which a driver having straight ends is used, and a pin P is fastened to the face plate to drive the carrier. But this does not remove the tendency (shown in Fig. 746) acting to spring the work from the pressure of the cut; hence, to obviate this latter tendency, two driving-pins P P, in Fig. 749, are sometimes used with the idea of driving the work from both sides, and thus equalizing the strain. But this is effective only when each pin is in working contact with the dog. This condition is difficult to secure for several reasons. First, suppose the two ends of the carrier to be of equal thickness, and the driving-pins to be of equal diameter, while the work receiving hole of the carrier is quite central to these two ends, then the work also must be true, in order to cause the pins to act equally on the ends of the carrier. Hence, this method is only applicable, even if all the above conditions be fulfilled, to the finishing cuts, and these would have to be taken on work that had been sprung in the

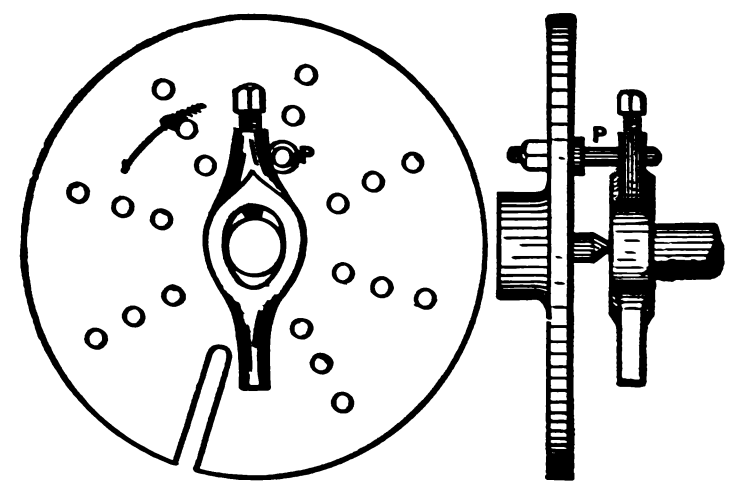

Fig. 748.

roughing cuts, so that it would be difficult to obtain accurate results. A nearer approach to correctness is therefore sought by various means. Thus, Fig. 750 represents a face plate provided with an annular T-groove, having a cut at H to admit two nuts into which the pins P are screwed. These pins may be tightened lightly, so that they will slip under the pressure of the roughing cut, and thus come to an equal bearing upon the carrier or work, as in case of the arms of a pulley where a carrier is not used. When the pins have adjusted themselves to have as near as may be an equal driving bearing, they may be tightened up. By this means the pins are compelled to act at an equal leverage upon the carrier or work, but there is no assurance of an equal degree of pressure of the pins P.

Another method is shown in Fig. 751, in which a clamp in two parts is employed, the driving-pins P fitting into two holes equidistant from the lathe centre, while loosening one bolt, J or K, and tightening the other is resorted to, to equalize the driving contact on the two arms, but in this case again there is no certainty that the two pins will drive equally, and there is danger of drawing the work somewhat out of true. Another form is shown in Fig. 752, the idea being to equalize the pressure of the driving pins, by means of the four screws, but here again, there is no means of knowing whether the driving pressure is equalized.

The best form of driver is shown in Fig. 753, which represents a Clements driver. The driving plate F has four slots; two of them, A and B, pass entirely through this plate to admit bolts C, D, which have a shoulder, so that they may be secured firmly to the lathe face plate, but which are an easy fit in the plate F, so as to permit

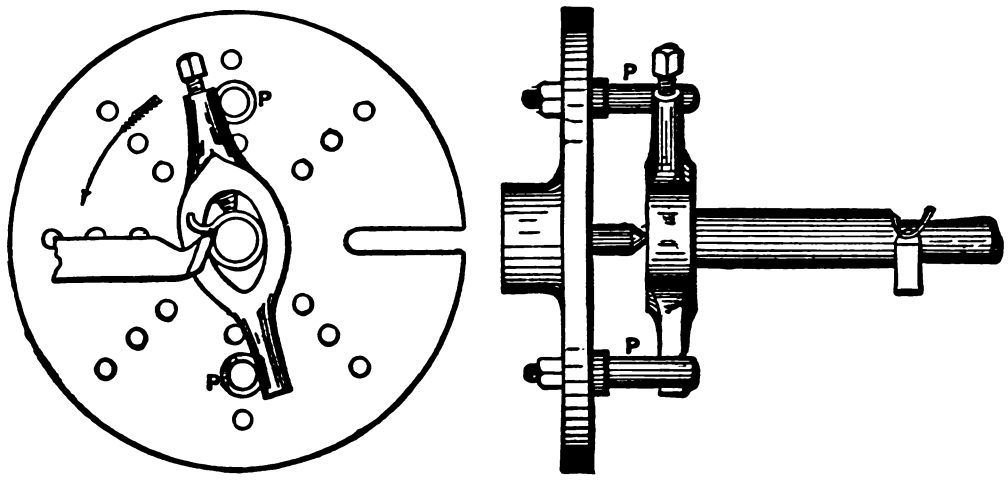

Fig. 749.

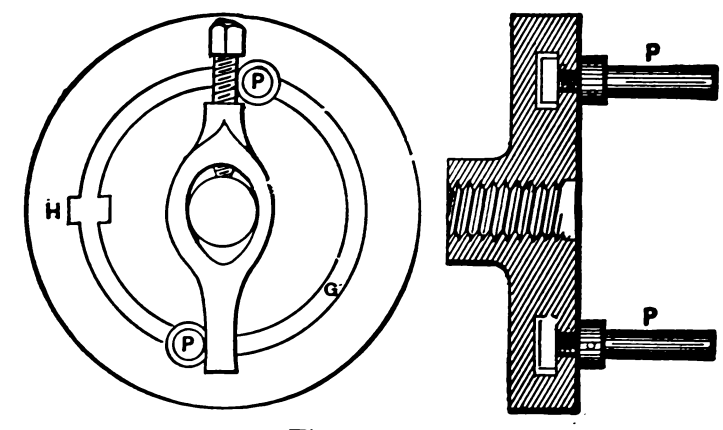

Fig. 750.

it to move upon the lathe face plate. The other two are T-shaped slots to receive nuts, into which the pins P, P, are to be screwed. The bolts C, D, drive F, and the pins P drive the work, the freedom of the plate E to move upon the lathe face plate permitting this strain-equalizing action of the driving-plate and driving-pins.

Sometimes, as in cutting screws, the work requires to be revolved

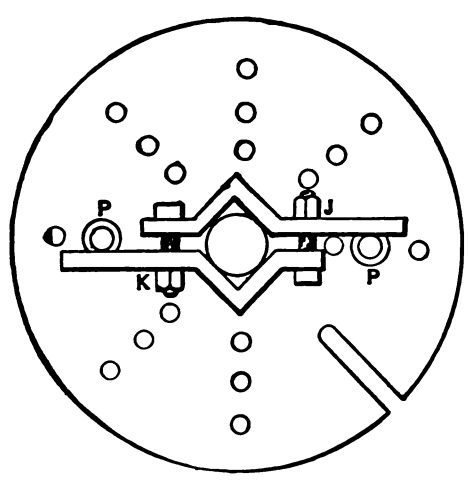

Fig. 751.

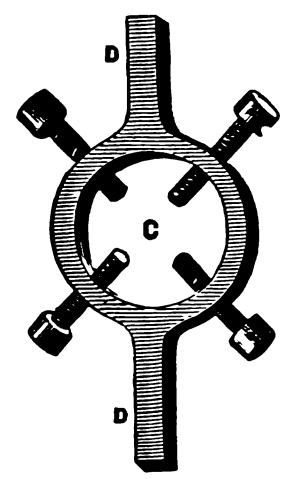

Fig. 752.

backwards, without having any lost motion between the arm and carrier, or, in other words, the carrier must revolve backwards as soon as the face plate does. To accomplish this a common plan is to tie the driver or carrier to the driving-pin, but a better plan is to employ a bent-tailed dog and secure its end in the face plate slot. A convenient form of face plate for this purpose is shown in

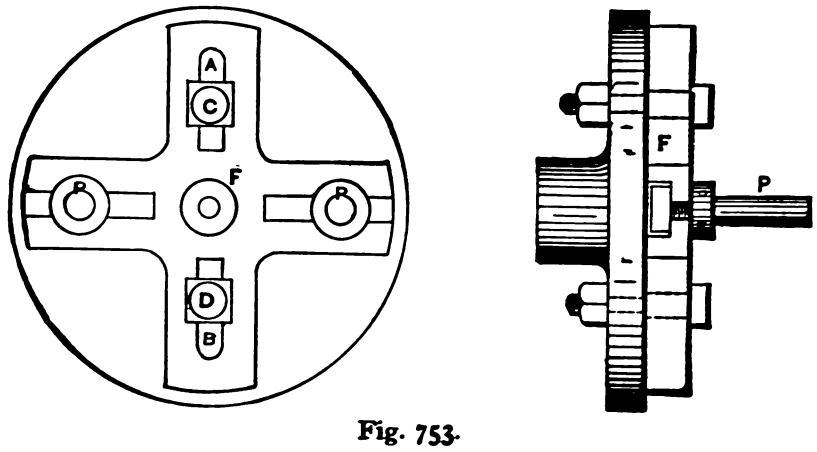

Fig. 753.

Fig. 754, E being a set screw for binding the dog, as shown. For special lathes in which the work is of uniform diameter, the driving pins P, Fig. 753, may be replaced by solid jaws; thus in Fig. 755 is a Clement driver, such as is used on axle lathes, C, C, being driving lugs in place of the pins P in figure.

Fig. 756 represents Shartles' self-tightening dog, in which a pivoted tongue grips the work automatically, the set screws approximately adjusting the dog to size, the action being obvious.

In very small lathes the driver is sometimes driven by the device shown in Fig. 758, which consists of a small chuck screwed on the live spindle, and containing the live centre and a driving arm B, which passes through the chuck, and is set to any required dis-

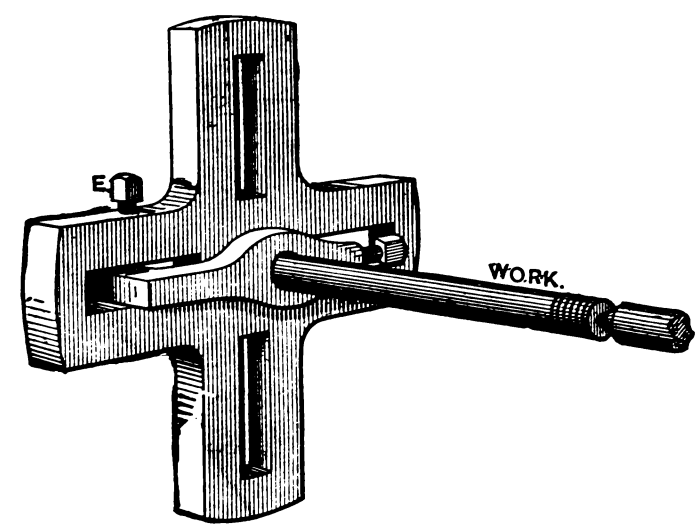

Fig. 754.

tance out, by the set-screw C. The objection to this is, first, that either the live centre must be very short, or the arm B must be very long; and, second, if the chuck wears out of true it carries

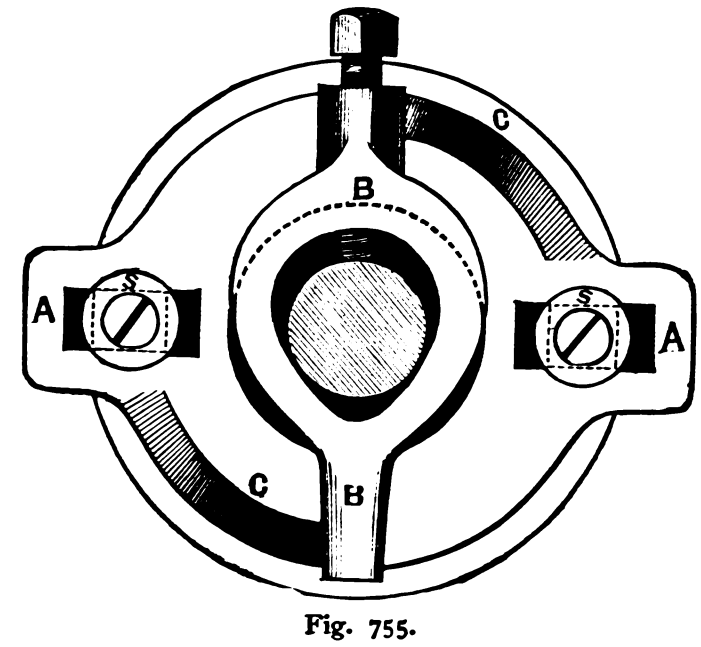

Fig. 755.

the live centre also out of true; hence this class of driver is but little used, even in foot lathes.

In small drivers of this kind it is sometimes the practice to cut away rather more than one-quarter of the thread on each side of the five spindle, as shown in Fig. 759. at A, and to cut away one-quarter of the thread on each side of the bore of the driver, as at B

in the figure. This enables the driver to be passed upon the spindle and screwed home with a quarter turn, thus saving time in putting on and taking off the driver.

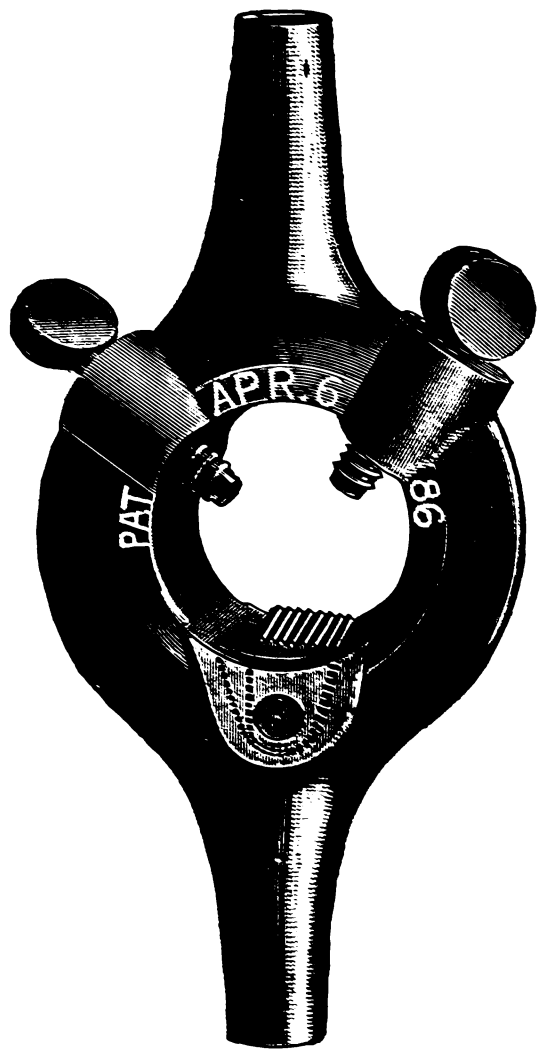

Fig. 756.

Fig. 760 illustrates a work driver very convenient for turning bolts. It consists of a piece of iron or plate P bolted to the lathe face plate F, and having jaws so as to fit to the sides of the bolt B and drive it. The nut not only saves the time that would otherwise be required to put on a driver or carrier, but leaves the underneath face of the bolt clear to be faced up by the turning tool, an example of its use being shown in connection with the knife tool or facing tool.

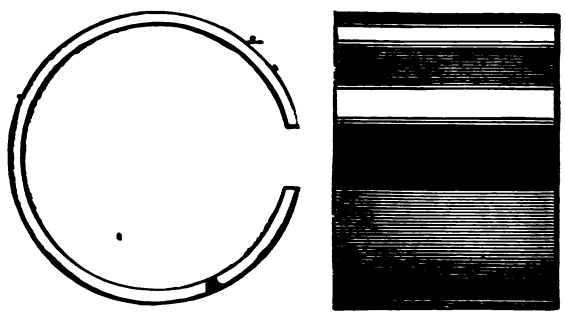

Fig. 757.

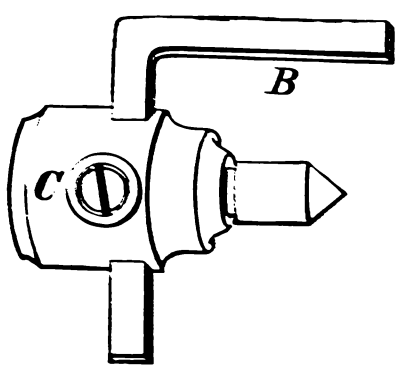

Fig. 758.

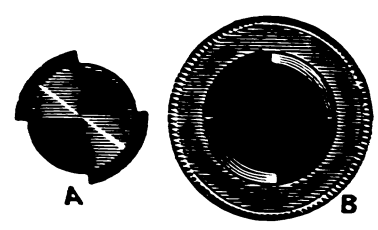

Fig. 759.

Fig. 761 represents a driver of this kind having a sliding jaw so that it may be set for different sizes of bolt heads.

Another form of driver answering the same purpose is shown in Fig. 762. For threaded work a driver threaded partly through, as in Fig. 764, is used, or two rests are screwed on the work end and the dog screwed on; sometimes, however, a copper or brass ring is put over the thread.

Fig. 763 represents a very useful form of work driver designed by

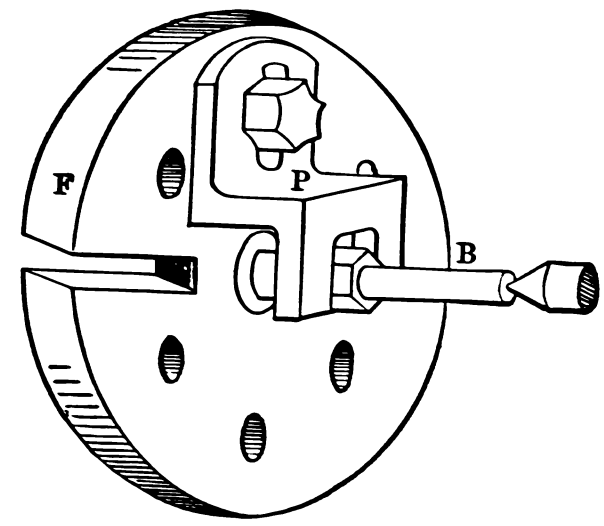

Fig. 760.

Mr. William A. Lorenz. It consists of two jaws A, A, held together by two screws, and threaded to receive two driving screws D, E, in the figure, which enables it to be used to hold work to the live centre, as is necessary when using the steady rest, as is shown in the figure,

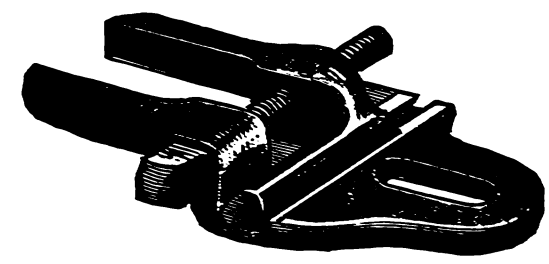

Fig. 761.

in which B represents the work and C the jaws of the steady rest. It is obvious that the dog may be thus employed to chuck work independently of the steady rest, because the live centre may be removed, and the face of the work held against the face of the chuck, the short screws H being used instead of the long ones D, E.

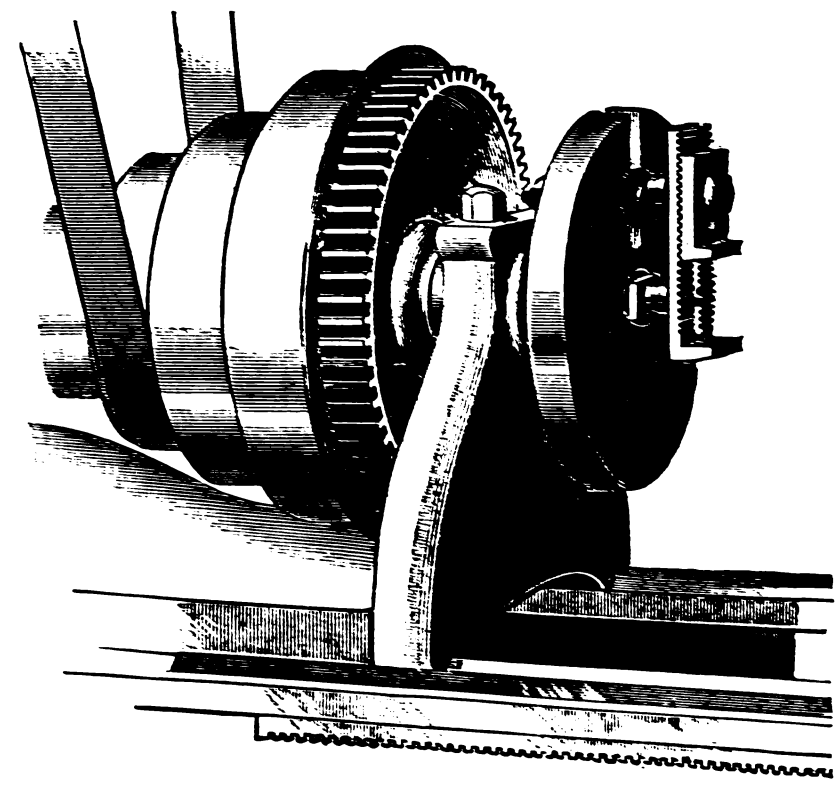

Fig. 762.

If the carrier is used to simply drive the work without clamping it to the live centre or face plate, one or both of the screw pins J, K, may be used in place of bolts D, E, the carrier being balanced when both are used.

Fig. 764 represents a driver, carrier, or dog threaded in its bore to drive threaded work, which the screw of the ordinary dog would obviously damage.

Fig. 765 represents an excellent driver for cored work such as the piece W. Its hub A is screwed on the live spindle in place of the face plate, and carries the rods B,B′, both of which are adjustable in the distance they stand out from A, so that B may be set to suit the work, and B′ set out sufficiently to balance B and D. The driving arm D is adjustable along B, and by being bent to the form shown is more out of the way, and obviates the necessity of using a dog on many kinds of work. The other end of the work is shown supported by a cone centre C, whose construction is shown in Figs. 766 and 767. Its object is to avoid the wear that occurs at the mouth of the hole in cored work, when it is run on the dead centre, and to avoid the necessity of plugging the hole to provide a temporary centre. In the figures, A represents a stem (fitting into the tailstock spindle S, in place of the ordinary dead centre), having a collar B and carrying the cone C. The work is supported upon C, which revolves upon the stem of A. At E is a raw-hide washer, intended to prevent the abrasion which would occur on the faces of B and C. The pin F prevents C from coming off D, one half of its cross section being in C, and the other half in a semicircular groove running around D. An oil groove is provided through the collar B, and passes along the stem D. This is an exceedingly handy device for cored work, and may also be used to sustain work against the lathe face plate, while chucking the work true by its bore.

The work drivers employed by wood turners, for work held between the lathe centres, are as follows :—

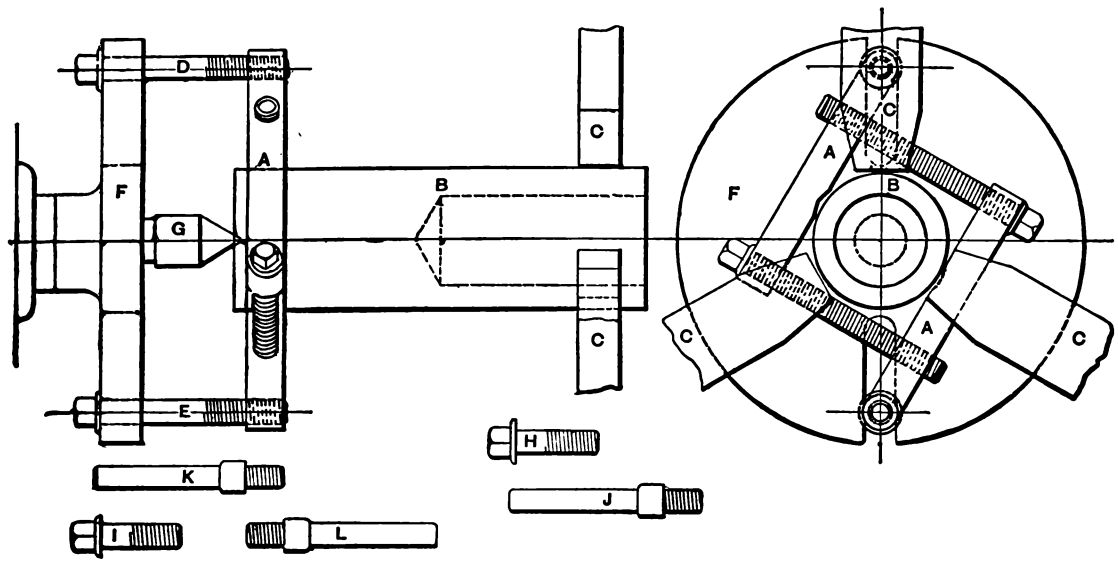

Fig. 763.

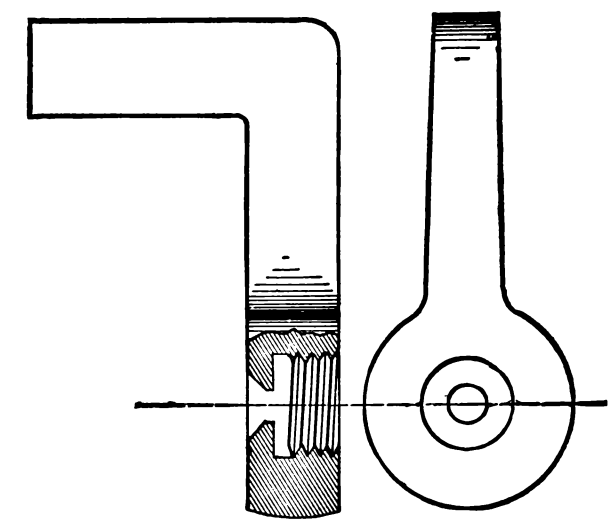

Fig. 764.

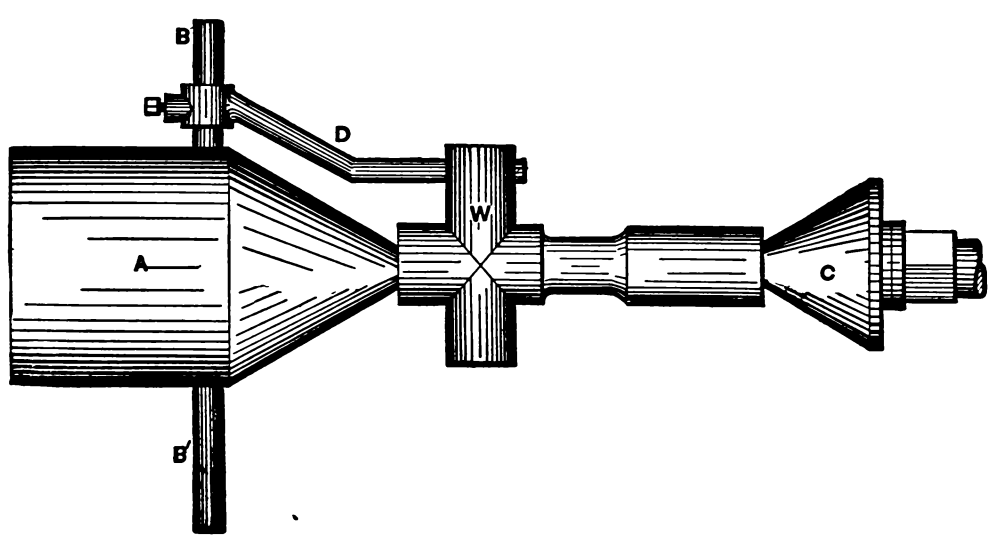

Fig. 765.

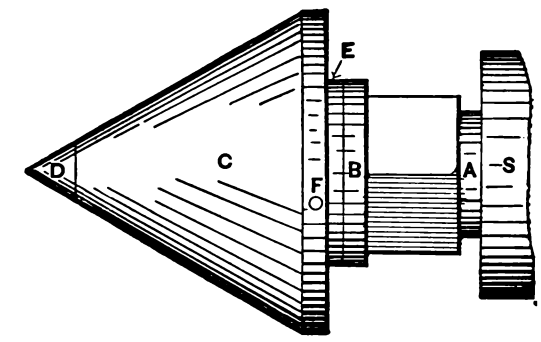

Fig. 766.

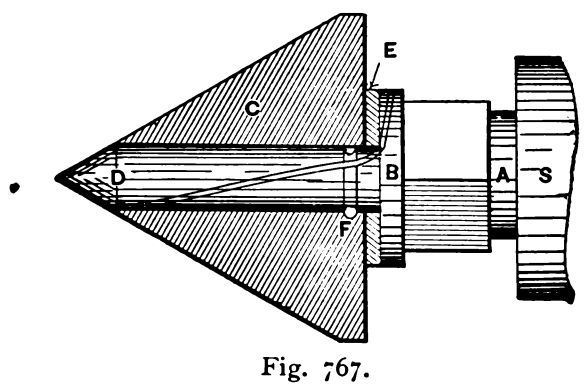

Fig. 767.

Fig. 768 represents two views of a fork centre to be placed in the cone spindle of the lathe, and serve as a live centre, while also driving the work ; C is a sharp conical point, which should run true, because it serves to centre the work ; D, E are two wings which enter the wood to drive it. This device answers well for work that can be finished without taking it in and out of the lathe, it being difficult to place the work in the lathe so as to run true after removal therefrom ; in case, however, that this should become necessary, the work should be replaced so that each wing falls into its original impression. For heavy work this device is unsuitable, hence the two plates shown in Fig. 769 are employed, being termed centre plates. They are composed of iron and are held to the work by screws passing through the respective holes shown at the corners of the plates. The plate having the round centre hole is for the dead centre end of the work, while that

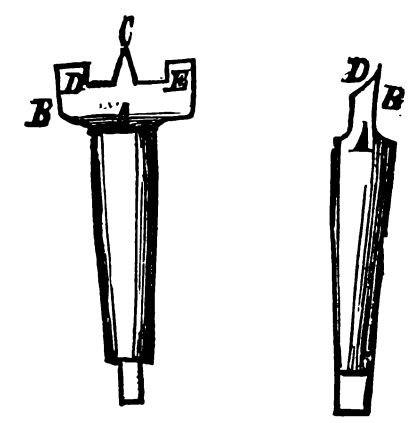

Fig. 768.

having the rectangular slot is for the live centre end of the work. The rectangular slot is made a close fit to the wings of the fork centre shown in figure. Figs. 770 and 771 represent a spur centre

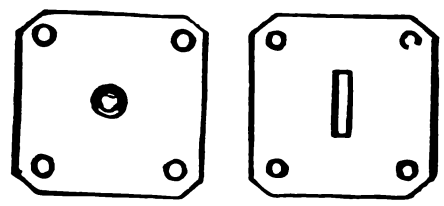

Fig. 769.

designed to hold pieces of soft wood, that may be liable to split from the pressure of the centres. The spurs are made parallel on their outer surfaces, while the inner ones are at an angle, so as to

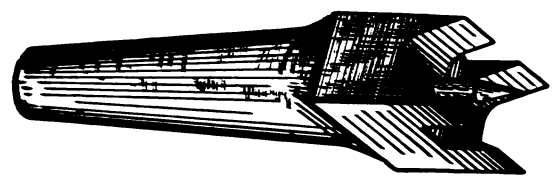

Fig. 770.

close the wood around the central point, and not spread the wood outwards. The plate for the dead centre is formed on the same principle as is shown in figure 769.

Another form of chuck centre or driving centre for wood work

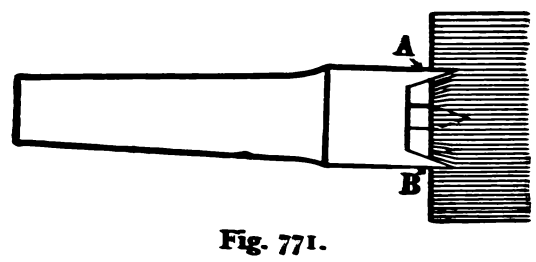

Fig. 771.

is shown in Fig. 772, being especially useful when the work cannot be supported by the lathe dead centre. The body A screws on to the thread on the live spindle of the lathe, while the work screws on the pointed screw B, which will hold disc-shaped pieces of moderate diameter, as about 4 or 5 inches, leaving its face to be

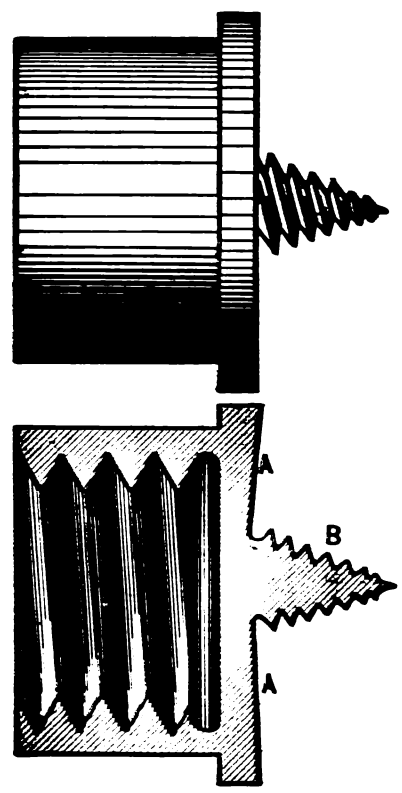

Fig. 772.

operated on as may be desired. To prevent B from splitting the work, or when hard wood is to be turned, a small hole may be bored up the work to permit B to enter sufficiently easily.

When a piece of work to be turned between the lathe centres is of such a form that there is no place to receive centres, provision must be made to supply the deficiency.

In Fig. 773, for example, a temporary centre B is fitted into the socket to receive the centre.

In small work that has been drilled or bored, a short mandrel is used instead of the piece B.

If a half-round piece is to be turned it should be forged with

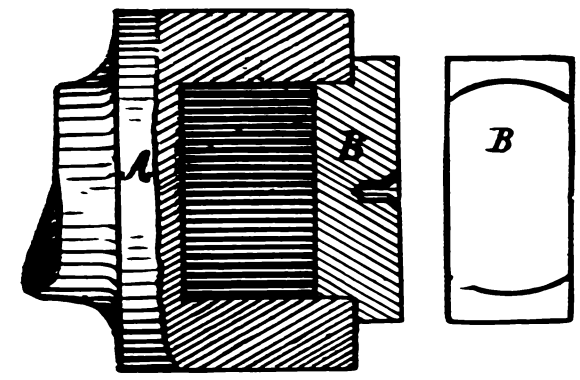

Fig 773.

a small projecting piece to receive the lathe centre, as in Fig. 774.

When the end of the work is flat and not in line with the axial line of the main body of the work, a piece of metal to contain the centre may be held to the work by a driving clamp, as in Fig. 775,

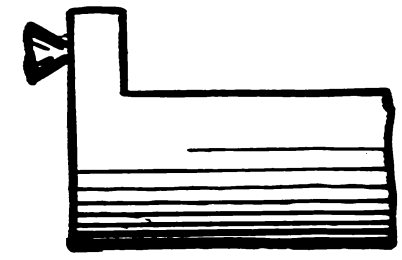

Fig. 774.

in which A represents the end of the work and B a temporary piece containing the centre C. In this case it is best to make the centre C after the piece B is clamped to the work.

To provide a temporary centre for a piece having a taper hole, a taper plug is used, as shown in Fig. 776, W representing the

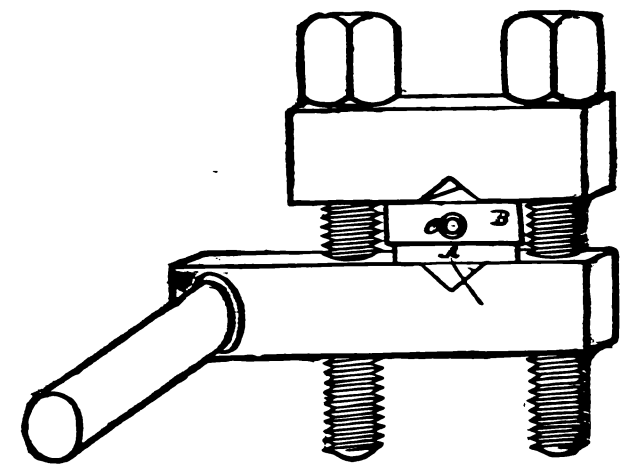

Fig. 775.

work and P the plug, which must be an accurate fit to the taper of the hole, and must not reach to the bottom of the hole.

MANDRELS OR ARBORS.—Work (of about 6 inches and less in diameter) that is bored is driven by the aid of the mandrel or

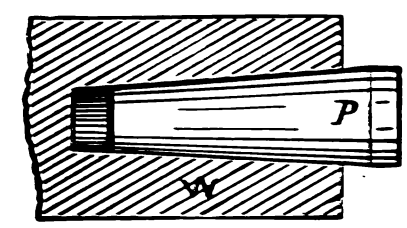

Fig. 776.

arbor, which is held between the lathe centres, as in Fig. 777, in which W represents a washer and M the mandrel, driven into the washer bore so as to drive it by friction. At A is a flat place to receive the set-screw of the driver or lathe dog, and at B a flat place upon which the diameter of the mandrel is marked. The

mandrel diameter is made slightly larger at D than at C, so as to accommodate any slight variation in the diameter of holes bored by standard reamers, which gradually reduce in diameter by wear; thus if a reamer be made $1\frac{1}{1000}$ inch diameter, with a limit of wear of $\frac{1}{1000}$ inch, then the mandrel may be made 1 inch at C and $1\frac{1}{1000}$ inch at D. It is well to taper the end of the mandrel from C to E about $\frac{1}{2000}$ inch, so that it may enter the work easily

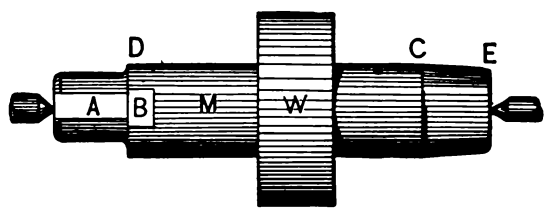

Fig. 777.

before being driven in. Instead, however, of driving mandrels into work, it is better to force them in under a press. If driving be resorted to a lead hammer, or for very light mandrels a raw-hide mallet, may be used.

In the absence of a lead hammer, a driver, such as in Fig. 778, is a good substitute, consisting of a socket containing babbitt or some other soft metal at B (the mandrel being represented by M).

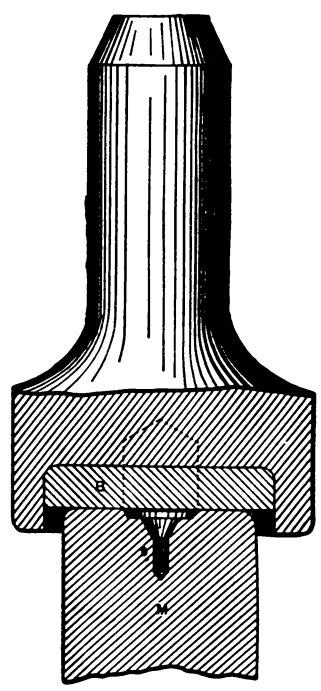

Fig. 778.

If copper be used instead of babbitt a hole may be drilled through it, as denoted by the dotted lines.

The centres of mandrels should either have an extra countersink, as at A in Fig. 779, or else the cut should be recessed as at B, Fig. 780. Mandrels are best made of steel hardened and ground up after hardening.

If the bore of the work is coned, and of too great a cone to permit the mandrel to be driven, and drive the work by friction, the cone mandrel shown in Fig. 781 may be used. M is the mandrel

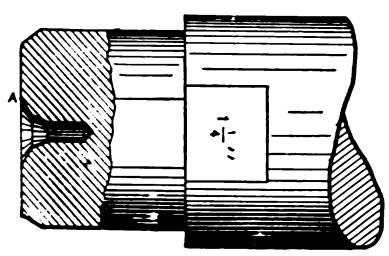

Fig. 779.

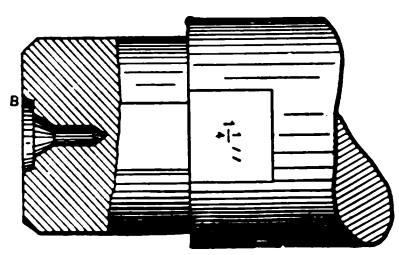

Fig. 780.

in one piece with the collar C. The work W is held between two cones A, A, which slide a close fit upon the mandrel, and grip the work by screwing up the nut N, there being a thread upon the mandrel, as at S, to receive the nut. It is obvious, however, that work having a parallel bore may also be held by the cone mandrel, as shown in Fig. 782.

To obviate the necessity of having the large number of mandrels that would be necessary so as to have on hand a mandrel of any size that might happen to be required, mandrels with provision for expanding or contracting the diameter of the parts used to hold the work are made.

Thus in Fig. 783 is shown Le Count's expanding mandrel, in which G H is the body of the mandrel, turned parallel along a certain distance, to fit the bore of the sleeve A, which is a close-sliding fit on this parallel part of E.

From the end H of the mandrel there extends towards the end G four dovetail grooves, which receive four keys B. The heads of these four keys are enclosed and fit into an annular groove provided in the head C of the sleeve A, so that moving the sleeve A

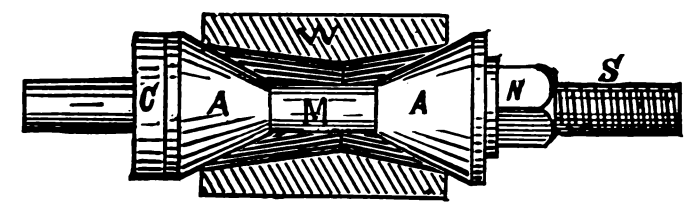

Fig. 781.

along the mandrel causes the four keys to slide simultaneously in their respective grooves.

Now these grooves, while concentric at any one point in their transverse section to the axis of the mandrel, are taper to that axis, so that sliding the sleeve A along the parallel part of the mandrel increases or decreases (according to the direction in which A is moved) the diameter of the keys.

If the sleeve be moved towards the end G, the keys while sliding in their taper grooves recede from the axis of the mandrel, while if moved towards H they approach the axis of the mandrel, or what is the same thing, if the sleeve be held stationary and the body of

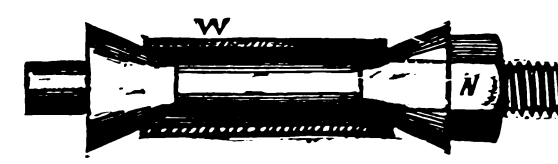

Fig. 782.

the mandrel be moved, the keys open or close in diameter in the same manner; hence all that is necessary is to insert the mandrel in the bore of the work, and drive the end G, when the keys will expand radially and grip the work bore.

The keys, it will be observed, are stepped on their diametral or work-gripping surfaces, which is done to increase the capacity of the tool, since each step will expand to the amount equal to the whole movement of the keys in their grooves or slots.

Mandrels or arbors are sometimes made adjustable for diameter by forcing a split cone upon a coned plug, examples being given in the following figures, which are extracted from *Mechanics*.

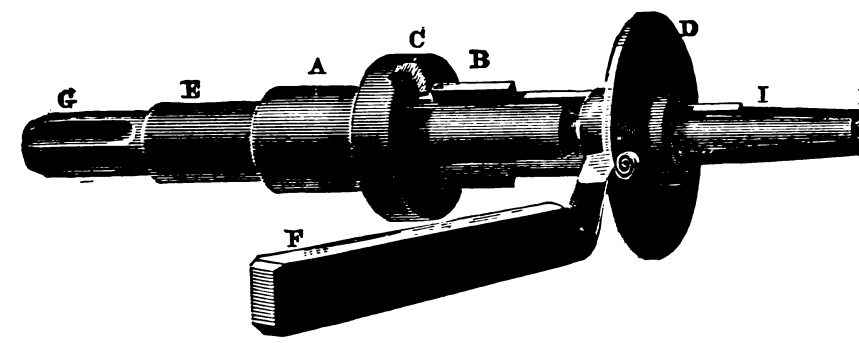

Fig. 783.

In Fig. 784, A is a cone having the driving head extending on both sides of the centre so as to balance it. Over its coned body fits the shell B, which is split, as shown in Fig. 785, the splits C, D being at a right angle to splits E, F.

It is obvious that the range of adjustment for such a shell is small, but several diameters of shell may be fitted to one cone, the thickness being increased to augment the diameter. The diameter of the shell should be made to enter the work without driving, the tightening being effected by screwing the nut up to force the shell up the cone.

Figs. 786, 787, 788, and 789 represent an expanding mandrel designed by Mr. Hugh Thomas, of New York City. The body B

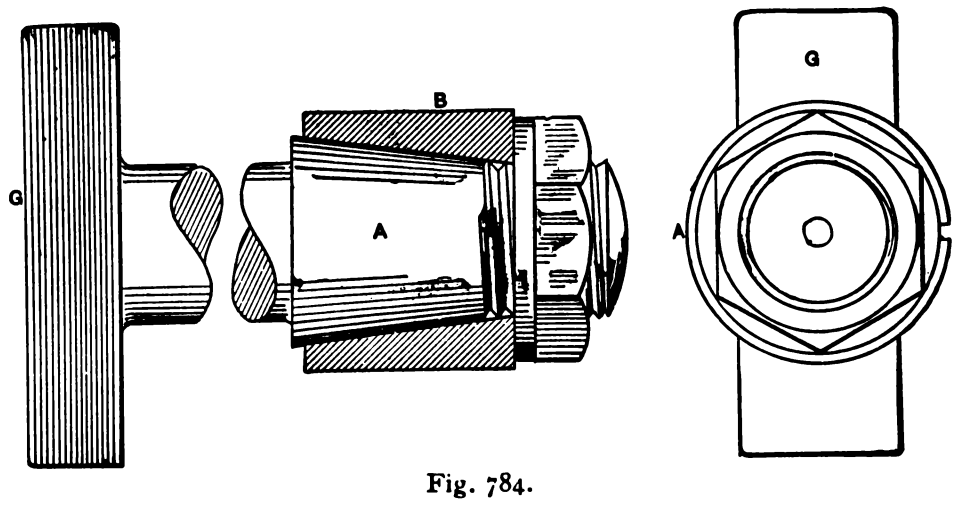

Fig. 784.

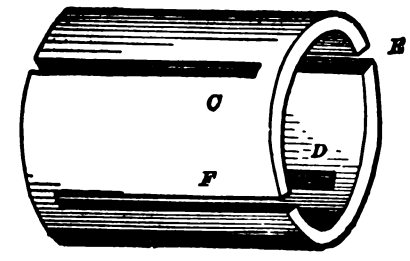

Fig. 785.

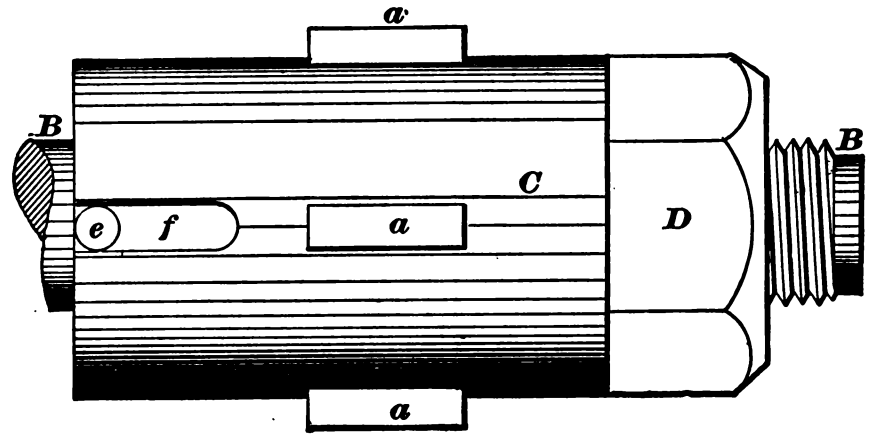

Fig. 786.

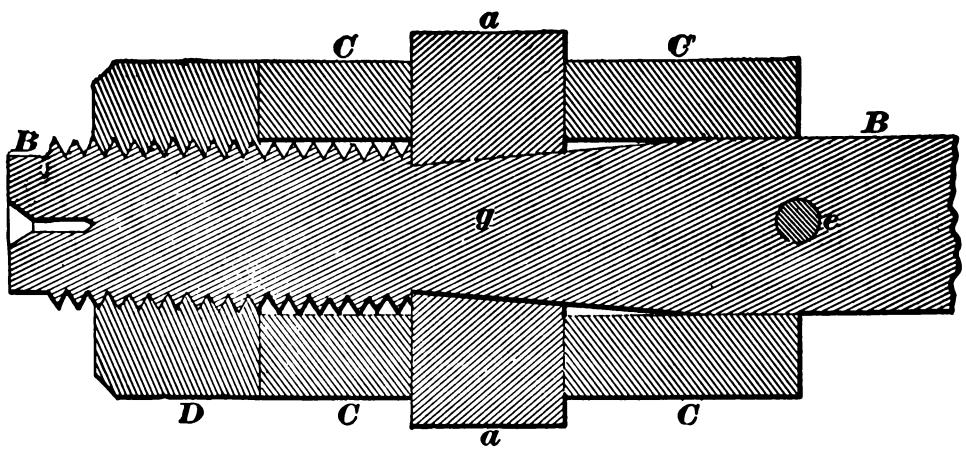

Fig. 787.

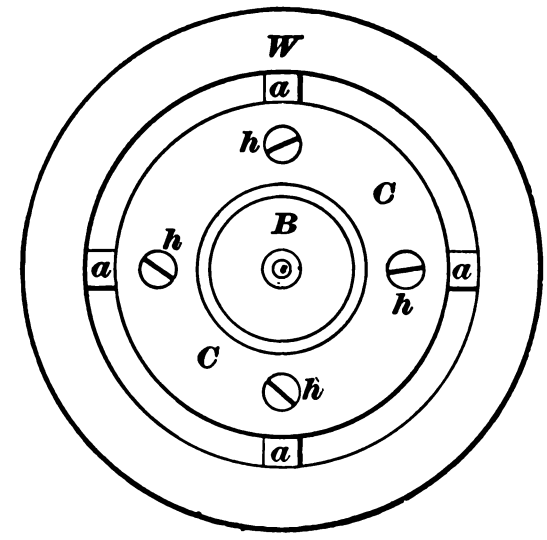

Fig. 788.

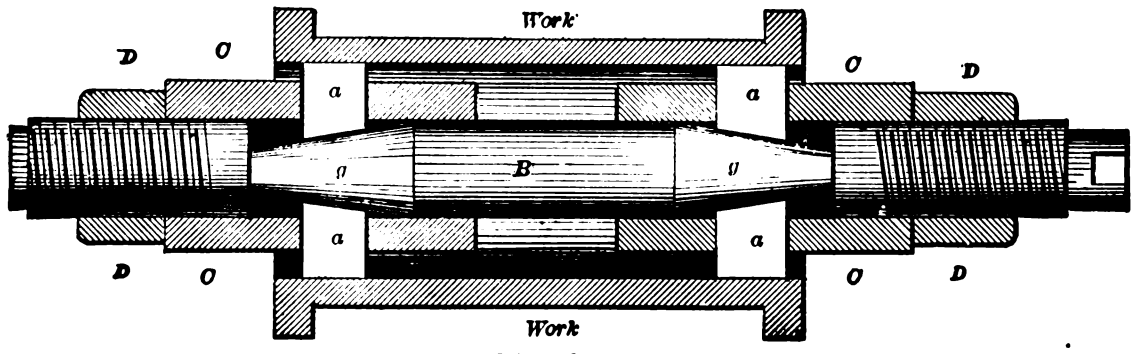

Fig. 789.

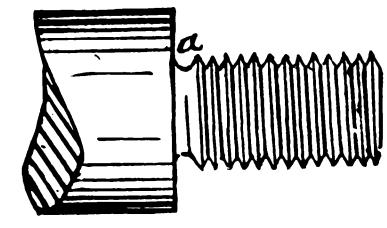

Fig. 790.

of the mandrel is provided with a taper section *g*, and either three or four gripping pieces *a*, *a*, *a*, *a*, let through mortises or slots in a sleeve C, which fits the body of the mandrel at each end.

This sleeve when forced up the mandrel by the nut D, carries the gripping pieces along the cone at *g*, and causes them to expand outwards and grip the bore of the work, which is shown in the end view in Fig. 788 to be a ring or washer W.

The advantage of this form is that the cone at *g* can be easily turned or ground to keep it true, and the gripping pieces *a* may be fastened in their mortises by means of the screws shown at *h* in the end view, and thus kept true. It is obvious that for long work there may be gripping pieces at each end of the mandrel, as in Fig. 789, and the work will be held true whether its bore be parallel, stepped, or taper, a valuable feature not usually found in expanding mandrels.

When a mandrel is used upon work having its bore threaded

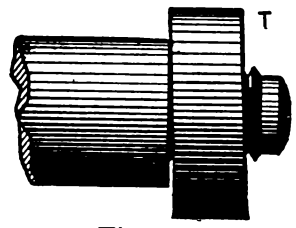

Fig. 791.

the mandrel also must be threaded, and must abut against a radial face, as at *a*, in Fig. 790, because otherwise the pressure of the cut would hold the work still while the mandrel revolved, thus causing the work to traverse along the mandrel. If the thread of the mandrel be made so tight a fit that it will drive the work by friction it will require considerable force to remove the work from the mandrel, so much so, in fact, that finished pieces would be much damaged in the operation. It is better therefore to have the work such a fit that it can be just screwed home against the radial face of the mandrel under heavy hand pressure (if the work be not too heavy for this, in which case a clamp may be employed). Small work, as nuts, &c., are turned on a mandrel of this kind, which has a stem, and fits into the cone or live spindle in the same manner as the live centre, which will drive work up to about 1 inch in diameter without fear of slipping. Threaded mandrels that are in frequent use soon become a loose fit to the work by reason of the thread wear, with the result that if the face of the work is not true with the thread, it meets the mandrel shoulder, as in Fig. 791, and as the nut cants over, one side as T in the figure, is turned

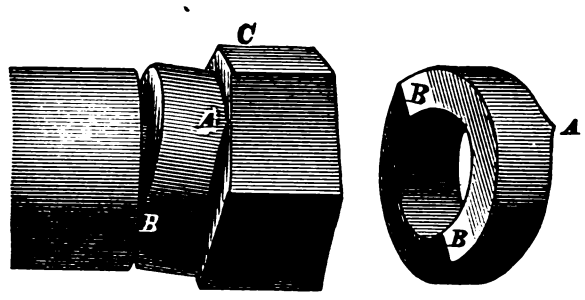

Fig. 792.

too thick. When the nut is reversed on the mandrel, the turned face will screw up fair against the mandrel shoulder, and the faces of the nut, though true one with the other, are not square with the axis of the thread, and will not therefore bed fair when placed in position upon the work.

To obviate this difficulty we have Boardman's device, which is shown in Fig. 792. It consists of a threaded mandrel provided with a ring, with two rounded projections A,A and B,B, on each radial face, those on one side being at a right angle to those on the other. This ring adapts itself to the irregular surface of the nut and by equally distributing the pressure on each side of the nut destroys the tendency to cant over, hence the nut may be turned true, notwithstanding any irregularity of its radial faces, and independently of its fitting the arbor or mandrel thread tightly.

Another form of mandrel for the same purpose is shown in Fig. 793, the mandrel being turned spherical, instead of having a square shoulder, and the washer W being cupped to fit, so that the washer will cant over and conform to the nut surface.

The mandrel thread may be caused to fill the nut thread better if it be provided with three or more splits A, B, C, Fig. 794, a hole D being drilled up the centre of the mandrel, the thread may then

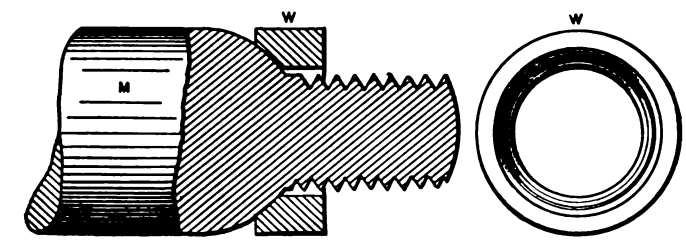

Fig. 793.

be turned somewhat large, the splits permitting the thread to close from the nut thread pressure.

When a mandrel is fitted to the sockets for the lathe centre, it should have a thread and nut, as shown in Fig. 795, so as to enable

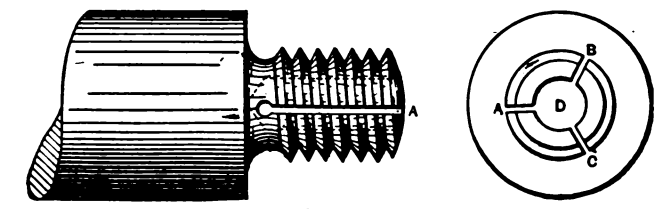

Fig. 794.

its extraction from the socket without striking it, as has been described with reference to lathe centres.

Mandrels may be employed to turn work, requiring its outside diameter to be eccentric to the bore, by the following means :—In

Fig. 795.

Fig. 796, let the centre C represent the centre of the mandrel, and D a centre provided in each end of the mandrel, distant from C to one half the amount the work is required to be eccentric. The mandrel must be placed with the centres D receiving the lathe

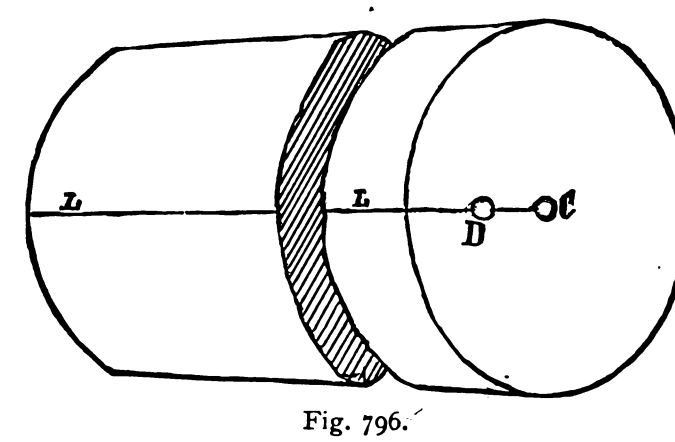

Fig. 796.

centres. In this operation great care must be taken that a radial line drawn on each end of the mandrel, and passing through the centre of the centres D, shall exactly meet and coincide with the line L drawn parallel to the axis of the mandrel. If this be not the case the work will be less eccentric at one end than at the

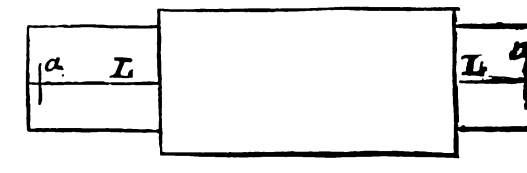

Fig. 797.

other. As it is a somewhat difficult matter to test this and ascertain if the mandrel has become out of true from use, it is an excellent plan to turn such a mandrel down at each end, as shown in Fig. 797, and draw on it the lines L,L, which correspond to the line L L in Fig. 796. If then a steel point be put in the lathe rest and fed in to the work, so that revolving the latter just causes

the tool point to touch the lines L at each end, or if the tool point makes long lines as at *a*, *a*, the two lines L, L, should intersect the lines *a*, *a* at the centre of their respective lengths. The lines L L should be marked as fine as possible, but deep enough to remain permanently, so that the truth of the eccentricity of the mandrel may be tested at any time. An equivalent device is employed in turning the journals of crank shafts, as is shown in Figs. 798 and 799, in which D, D are two pieces fitted on the ends of the crank shaft, being equal in thickness to the crank throw, as shown at A, B in the figure, so that when D, D lie in the same plane as the crank cheeks (as when all will lie level on a plate, as in the figure) the centres C will be in line with the journal in the crank throw. Pieces D are broadened at one end to counterbalance the weight of the crank, which will produce more true work than counterbalancing by means of weights bolted to the face plate of the lathe, as is sometimes done, causing the crank throw to be turned oval instead of round. In the case of a double crank, however, the centre pieces cannot be widened to counterbalance, because what would counterbalance when the centres A in Fig. 799 were used, would throw the crank more out of balance when centres B were used for the throw B. In this case, therefore, the centre pieces are provided with seats for the bars E, E, which may be bolted on to carry the counterbalancing weights, the bars being changed on the centre pieces when the centres are changed. The bars, for example, are shown in their position when the centres A are being used to turn up the journal A, the necessary amount of weight for counterbalancing being bolted on them with a set-screw through the weight.

The centres are steel plugs screwed tightly into the pieces D, and are hardened after being properly centre-drilled and countersunk.

To enable the pieces D to be easily put on and taken off, it is a good plan to make the bore a tight fit to the shaft and then cut it away as at E, as shown in Fig. 801, using set-screws to hold it.

Great care is necessary in putting in the work centres, since they must, if the crank throws are to be at a right angle one to the other, as for steam engines, be true to the dotted lines in figure, these dotted lines passing through the centre of the axle and being at a right angle one to the other. If the thickness of the centre pieces are greater than the crank throws they may be adjusted as in Fig. 800, in which B, B′ represent the centre pieces, and C the crank, while S is a straight-edge; the edge surfaces of B, B being made true planes parallel to each other on each arm, and parallel to the axial line of the bore fitting the end of the crank axle.

The straight-edge is pressed at one end, as at F, firmly to an edge face of B, the other end being aslant so as not to cover the edge of the piece B′ at the opposite end of the crank (as shown at G, Fig. 801). While being so pressed the other end must be swung over the end arm of B′ at the opposite end of the crank, when the edge of the straight-edge should just meet and have slight contact

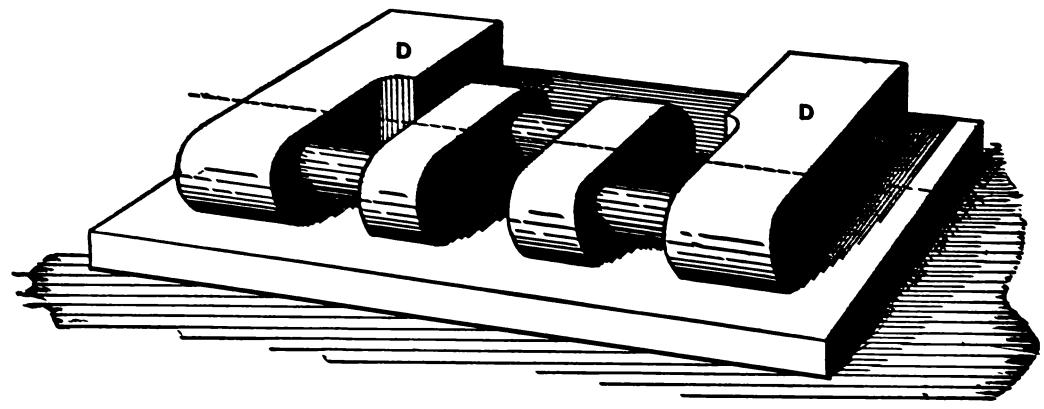

Fig. 798.

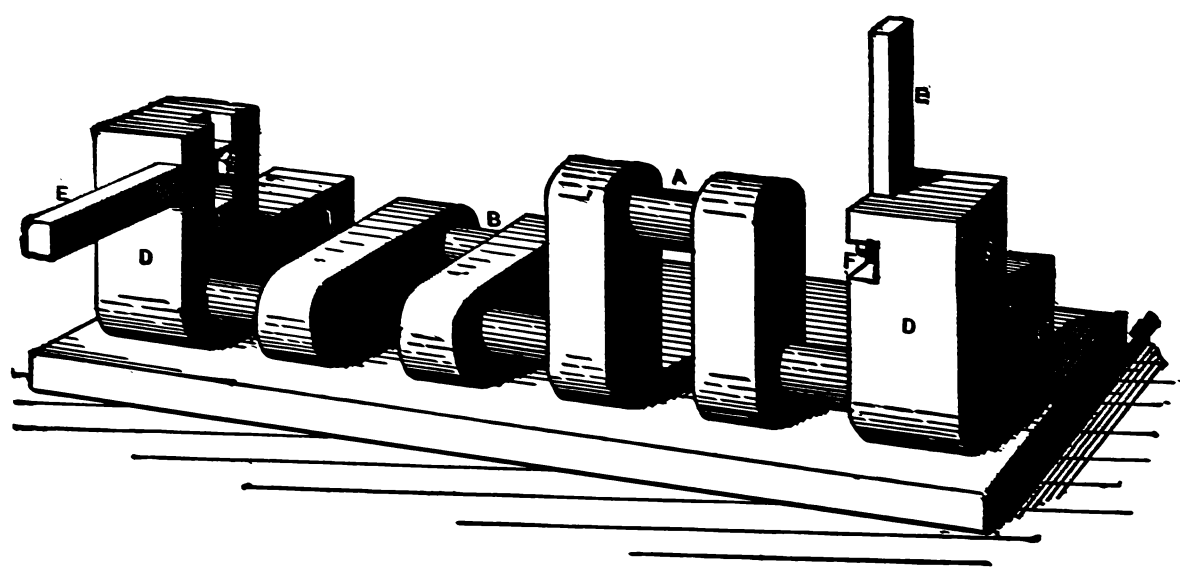

Fig. 799.

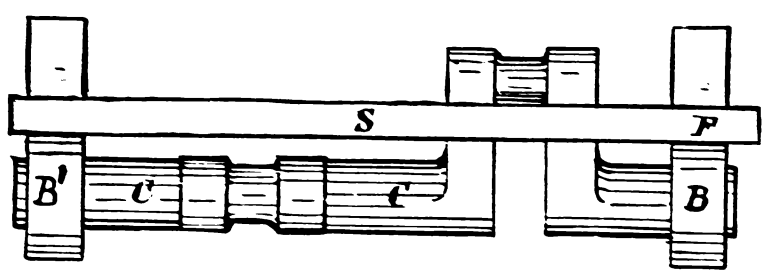

Fig. 800.

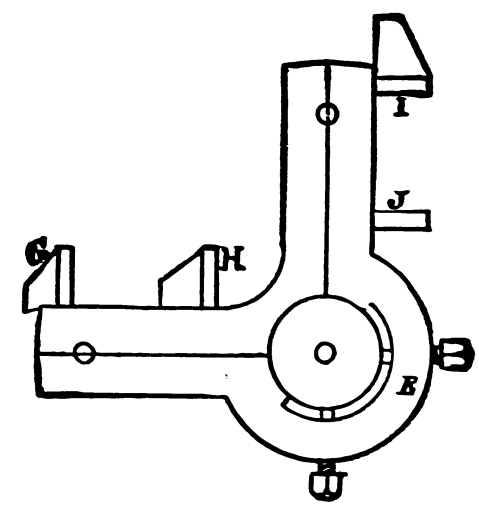

Fig. 801.

with the surface of the edge of B′. This test should be applied to all four edges of P, and in two positions on each, as at G, H—I, J, and for great exactitude may be applied from each end of the crank. It is to be observed, however, that the tests made on the edges standing vertical, as at I, J, will be the most correct, because the straightness of the straight-edge is when applied in those positions not affected by deflection of the straight-edge from its own weight.

In shops where such a job as this is a constantly recurring one attachments are added to a press of some kind, so that the axle and the pieces B may be guided automatically and forced to their proper places, without requiring to be tested afterwards.

When the work is sufficiently long or slender to cause it to sag and bend from its own weight, or bend from the pressure of the cut, it is supported by means of special guides or rests. Fig. 802 represents a steady rest of the ordinary pattern ; its construction being as follows :—F is a base fitting to the Vs of the lathe shears at *f*, and capable of being fastened thereto by the bolt C, nut N, and clamp A. F′ is the top half of the frame, being pivoted at P to F, the bolt P′ forming the pivot for both halves (F and F′), of the frame, which may be secured together by the nut of P′. On the other side of the frame the bolt is pivoted at *b* to F. This bolt passes through an open slot in F′, so that its nut being loose, it may swing out of the way as denoted by the arrow *e*, and the top

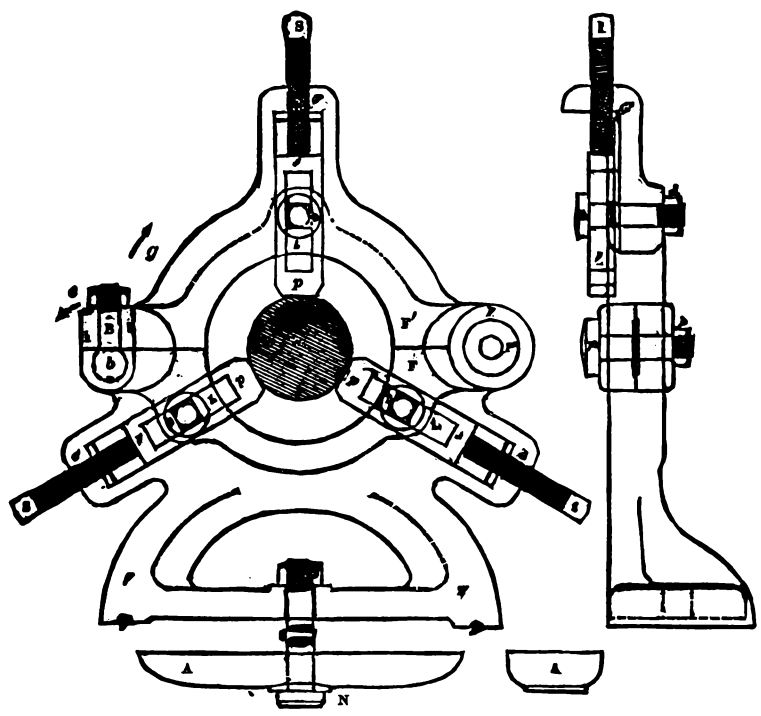

Fig. 802.

half frame F′ may be swung over in the direction of arrow *g*, the centre of motion or pivot being on the bolt P′. With F′ out of the way the work may be placed within the frame, the nut of B and also that of P′ may be tightened up so as to lock the two halves of the frame firmly together.

On this frame and forming a part of it are the three ways, G G′ G″, which contain cavities or slide ways to which are fitted and in which may slide the respective jaws J, and to operate these jaws are the respective square-headed screws S, which are threaded through the tops of the respective ways G, G′, and G″. The screws are operated until the ends of the jaws J have contact with the work W, and hold it axially true with the line of centres of the lathe, or otherwise, as the nature of the work may require. When adjusted the jaws are locked to the frame by means of the bolts D, which are squared to fit in the rectangular openings, shown at *h* in the respective jaws, so as to prevent the bolts from rotating when their locking nuts *d* are screwed home.

As an example of the use of this device as a steadying rest, suppose a long shaft to require turning from end to end and to be so slight as to require steadying, then a short piece of the shaft situated somewhat nearer the live centre than the middle of the length of the work is turned upon the work, so that this place shall be round and true to receive the jaws, or plates *p*, and revolve smoothly in them. The jaws are then adjusted to fit the turned part a close sliding fit, but not a tight fit, as that would cause the jaws to score the work. To prevent this even under a light pressure of contact, oil should be occasionally supplied. This steadies the work at its middle, preventing it from springing or trembling when under the pressure of the cut.

By placing the steady rest to one side of the middle of the work length, at least one half of that length may be turned before reversing the work in the lathe centres. After reversing the work end for end in the lathe centres, the jaws, or plates *p*, are adjusted to the turned part, and the turning may be completed.

In adjusting the plates *p* to the work, great care is necessary or they will spring the work out of its normal line of straightness, and cause it to be out of parallel, or to run out of true in the middle of its length, as explained in the remarks referring to the cat head shown in Fig. 809.

The plates *p* should be gripped to the frame by the nuts with sufficient force to permit them to be moved by the set-screw S under a slight pressure, which will help their proper adjustment. They should also be adjusted to just touch the work, without springing it, the two lower ones being set up to the work first, so that their contact shall serve to relieve the work of its spring or deflection, due to its own weight. This is especially necessary in long slender spindles, in which the deflection may occur to a sensible degree.

If the work does not require turning on its full length, the steady rest may be applied but a short distance from the length of the part to be turned, so as to hold the work more steadily against the pressure of the cuts.

Steady rests are often used to support the end of work without the aid of the dead centre, but it is not altogether suitable for this class of work, because it has no provision to prevent the work from moving endways and becoming loose on the dead centre. A provision of this kind is sometimes made by tying the work driver to the face plate or to the pins driving the work driver or dog, or bolts and plates holding the work driver towards the lathe face plate ; but these are all objectionable in that unless the pressure thus exerted be equal, it tends to spring or bend the work.

Another method of preventing this is to drive the work by means of a universal chuck ; but this again is objectionable, because the jaws of these chucks do not keep dead true under the wear, and indeed if made to run concentrically true (in cases where the chuck has provision for that purpose) the gripping surfaces of the chuck jaws have more wear at the outer than at the inner ends, hence those surfaces become in time tapering. Again the jaws wear in time so easy a fit in their radial slots that they spring under pressure, and the wear not being equal, the amount of spring is not equal, so that it is impracticable to do dead true work chucked in this way.

The reasons that the chuck jaws do not wear equal in the radial slots may be various, as the more frequent presence of grit in one than in the other, less perfect lubrication, inequalities in the fit, less perfect cleaning, and so on, so that it is not often that the wear is precisely equal. In addition to these considerations there are others rendering the use of the steady rest in some cases objectionable ; suppose, for example, a piece of cylindrical work, say 6 feet long, to have in one end a hole of 2 inches diameter, which requires to be very true (as, for example, the cone spindle for a lathe). Now let the face plate end be driven as it may, it will be a difficult matter to set the steady rest so as to hold the other end of the work in perfect line, so that its axial line shall be dead true with the line of lathe centres, because the work will run true though its axial line does not stand true in the lathe.

Here it may be added that it will not materially aid the holding of the work true at the live centre end, by placing it on the live centre and then tightening the universal chuck jaws on it, because the pressure of those jaws will spring it away to some extent from the live centres. This will occur even though the work be placed between the two lathe centres, and held firmly by screwing up the dead centre tight upon the work, before tightening the chuck jaws upon the work, because so soon as the pressure of the dead centre is removed, the work will to some extent relieve its contact with the live one.

If the jaws of the chuck are not hardened, they may be trued

up to suit a job of this kind as follows :—A ring (of such a size that when gripped in the outer steps of the chuck jaws, the inner steps will be open to an amount about equal to the diameter of the work at the live centre end) may be fastened in the chuck, and the inner ends of the jaws may be turned up with a turning tool, in which case the jaws will be made true while under pressure, and while in the locations upon the chuck in which they will stand when gripping the work, under which conditions they ought to hold the work fairly upon the live centre. But even in this case the weight of the work will aid to spring it, and relieve it from contact with the live centre.

Now let us suppose that the piece of work is taper on its external diameter at each end, even truing of the chuck jaws will be of no avail, nor will the steady rest be of avail, if the taper be largest at the dead centre end. Another form of steady rest designed to overcome these objectionable features is shown in Fig. 803. In this case the stand that is bolted to the lathe bed is bored to

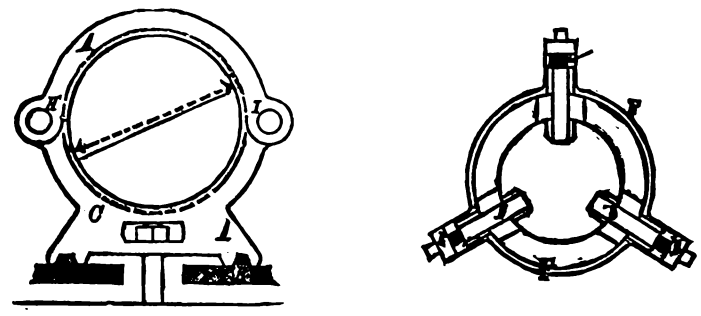

Fig. 803.

receive a ring. This ring is made with its middle section of enlarged diameter, as denoted by the dotted circle C. Into the wide part of the stand fits a ring F, its external diameter fitting into C. The ring carries the jaws, hence the ring is passed over the work, and is then inserted into the stand, while the work is placed between the lathe centres.

The ring revolves with the work and has journal bearing in the stand, the enlarged diameter C preventing end motion. There is nothing here to take up the lost motion that would in time ensue from the wear of the radial faces of the ring, hence it is better to use the cone-plate shown in Fig. 805.

When, however, the work will admit of being sufficiently reduced in diameter, it may be turned down, leaving a face F in Fig. 804, that may bear against the radial faces of the jaws of the steady rest ; or a collar may be set upon the work as in Fig. 804 at C.

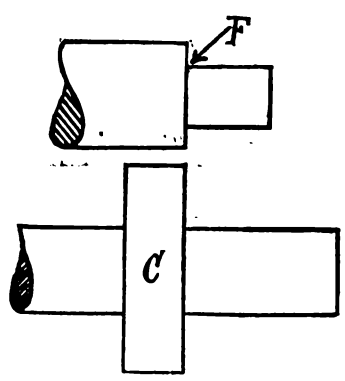

Fig. 804.

But these are merely makeshifts involving extra labor and not producing the best of results, because the radial face is difficult to keep properly lubricated, and the work is apt to become loose on the live centre.

For these reasons the cone plate shown in Fig. 805 is employed ; A is a standard fitting the shears or bed of the lathe and carrying the circular plate C by means of the stud B, which is fitted so as to just clamp the plate C firmly to the frame A when the nut of B is screwed firmly home with a wrench.

The plate C contains a number of conical holes, 1, 2, 3, &c., (as shown in section at D), of various diameters to suit varying diameters of work.

The frame is fitted to the lathe bed so that the centre stud B stands sufficiently out of the line of lathe centres to bring the centres of the conical holes true with the line of lathe centres. The centres of the conical holes are all concentric to B. Around the outer diameter of the cone plate are arranged taper holes G, so situated with reference to the coned holes that when the pin, shown at G in the sectional view, will pass through the plate and into the frame A as shown, one of the coned holes will stand axially true with the line of lathe centres. Hence it is simply necessary to place one end of the work in the live centre, with a work driver attached in the usual manner ; to select a coned hole of suitable size ; to move the frame A along the lathe bed until it

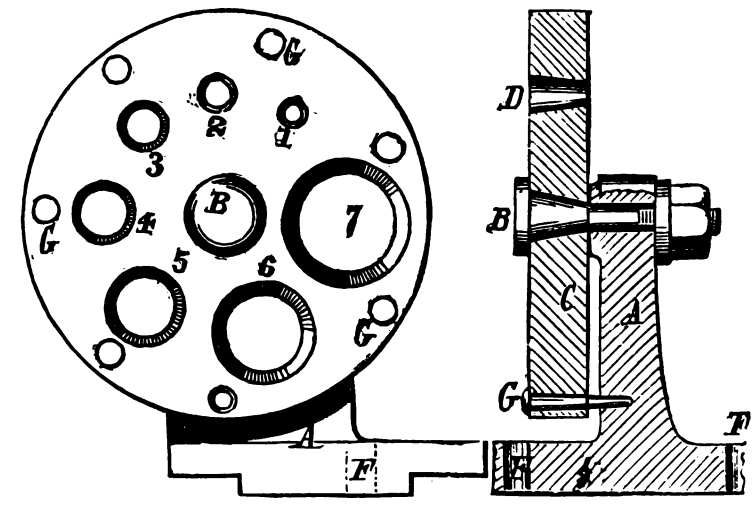

Fig. 805.

supports the overhanging end of the work in a suitably sized coned hole without allowing the work any end motion, and to then fasten the frame A to the lathe bed, and the work will be ready to operate on. The advantages of this device are that the pin shown at G in the sectional view holds the conical hole true, and thus saves all need of adjustment and liability to error, nor will the work be sprung out of true, furthermore the tool feed may traverse back and forth, without pulling the work off the live centre. With this device a coarse pitch left-hand internal thread may be cut as easily as if it were an external thread and the work

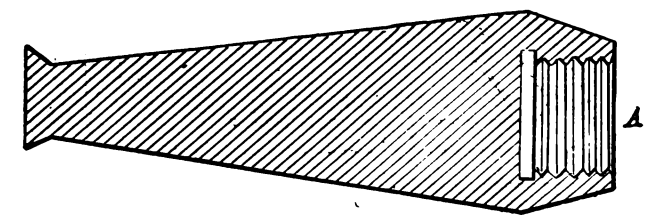

Fig. 806.

was held between the lathe centres, heavy cuts being taken which would scarcely be practicable in the ordinary form of steady rest.

The pins B and G and the coned holes should be of cast steel hardened, so as to avoid wear as much as possible. The plate may be made of cast iron with hardened steel bushes to fit the coned holes.

It is obvious that the radial face of the work at the cone plate end, as well as the circumference, must be trued up, so that the work end may have equal contact around the bore of the coned rings.

Figs. 806 and 807 represent a class of work that it would be

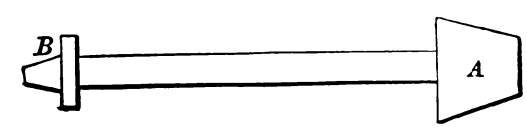

Fig. 807.

very difficult to chuck and operate on without the aid of a cone plate. The former requires to have a left-hand thread cut in its bore A, and the latter a similar thread in end A. A universal chuck cannot be used to drive the work, because in the former case it would damage its thin edge, and in the latter the jaws would force the work out of the chuck ; a steady rest cannot be used on the former on account of its being taper, while if used on the latter there would be nothing to prevent the work from moving endwise, unless a collar be improvised on the stem, which on

account of the reduced diameter of the stem would require to be made in two halves. It can, however, be driven on the live centre by a driver or dog, and supported at the other end by the cone plate without any trouble, and with an assurance of true work.

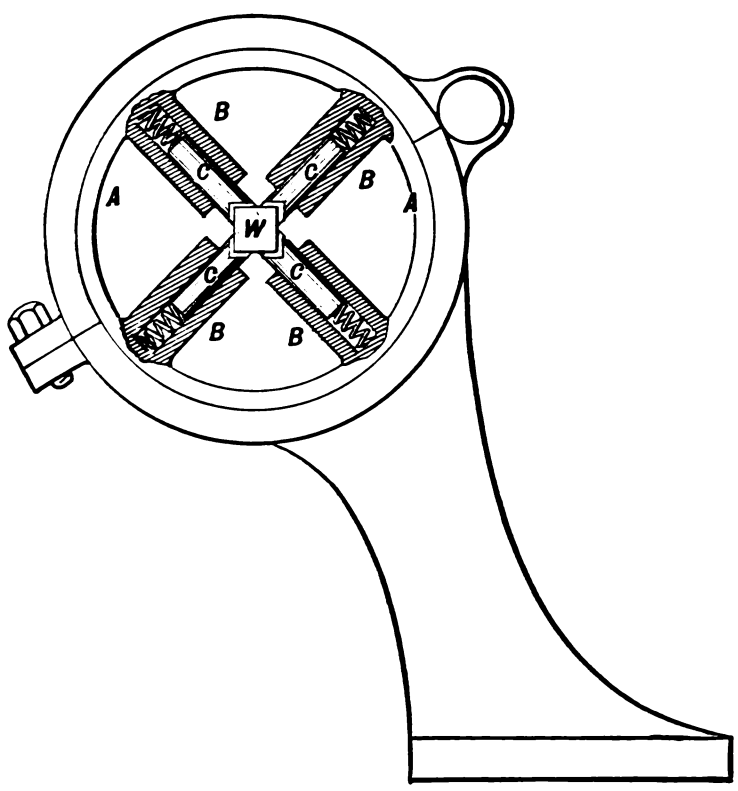

Fig. 808.

Fig. 808 represents a form of steady rest designed by Wm. MacFaul, of the Freeland Tool Works, for taper work. The frame affords journal bearing to a ring A, having four projections B, to which are a close but easy sliding fit, the steadying jaws C. These are held to the work or cue blank W by the spiral springs

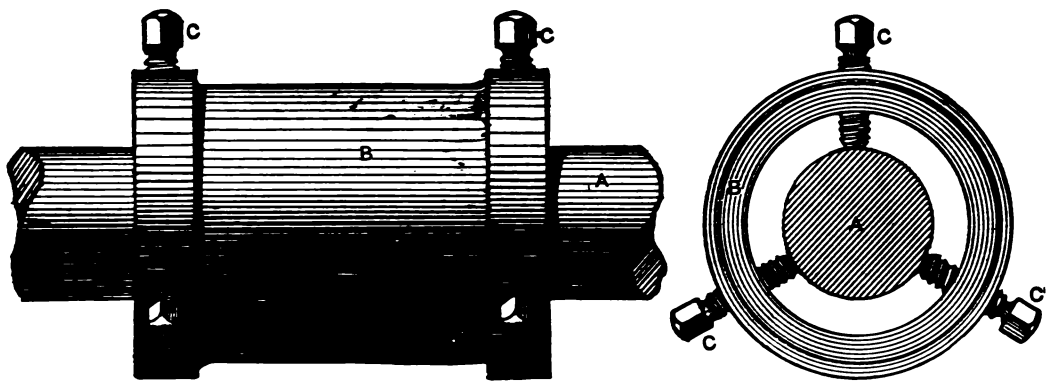

Fig. 809.

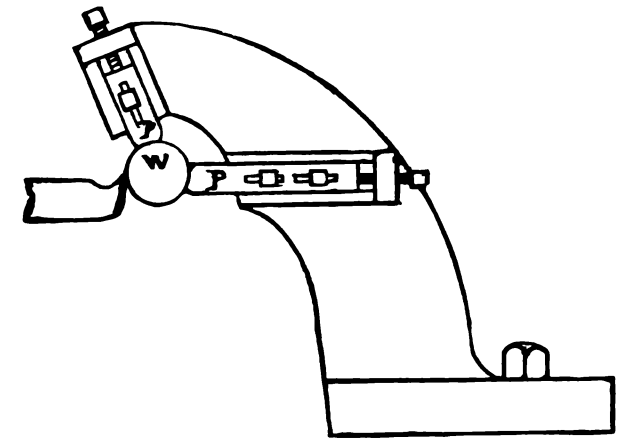

Fig. 810.

shown in the projections or sockets B, which act against the ends of C. It will be observed that the work being square could not move in any direction without moving sideways the two of the steadying jaws C which stand at a right angle to that direction. But the jaws C fit the bore of the sockets, and cannot, therefore, move sideways; hence it is evident that the work is firmly supported, although the steadying jaws are capable of expanding or contracting to follow the taper of the blank cue or other piece of work. This enables the steady rest to lead the cutting tool instead of following it, so that the work is steadied on both sides of the tool. Obviously, the stand may be fastened to the leading side of the lathe carriage or fitted upon the cross-slide, as may be most convenient.

To steady work that is unturned and of so great a length that it springs too much to permit of its being turned true, the sleeve or cat head shown in Fig. 809 is employed; it may contain three or four screws C, to true it upon the work. The body B is turned true.

The set-screws are so adjusted upon the work, that the outside runs quite true from end to end. The jaws of the steady rest are then set to just touch the circumference of the sleeve, care being taken that their pressure does not spring the axial line of the work out of its normal straight line. If the shaft is to be turned from end to end, the cat head should be placed sufficiently to one side of the centre of the length of the work and nearer the live centre, that the lathe tool may turn up the work for a distance of at least half its length, or slightly more than half. One half of the work being turned, the shaft is reversed end for end in the lathe, when the cat head may be moved to envelop the turned part, and again set true, or the jaws of the steady rest may be set direct upon the work; in this latter case, however, the friction between the jaws and the work will be apt to leave rings or marks upon the latter.

If the cat head is not set to run quite true upon the work, the latter will not run true when the steady rest is removed, and if the jaws of the steady rest spring the axial line of the work out of its normal straightness, the work will be turned either larger or smaller in diameter in the middle of its length, according to the direction in which the work is sprung.

Suppose, for example, that the work is sprung laterally towards the tool point, then the work will be turned smaller in the middle, or if the work were sprung laterally in the opposite direction, it would be turned larger in the middle than at the ends. If the work is sprung vertically so as to approach or recede from the lathe bed, the amount of the error will be less than if it were sprung laterally, and the nature of the error will depend upon the height of the cutting tool with relation to the work. If, for example, the point is above the centre of the work, and the latter is sprung towards the lathe bed, the work will turn of largest diameter in the middle of its length; or with the tool point placed at the centre of the work, the same result will follow, whether the work be sprung up or down; but if the work be sprung up or away from the lathe bed, and the tool point be placed above the centre, the diameter of the work will be turned smaller than that at the ends.

When the work is to be turned from end to end or for a considerable distance, a follower rest such as shown in Fig. 810 should be employed, being similar to the steady rest shown in Fig. 802, except that it is open in front, and being fastened to the slide rest carriage, of course travels with the tool; hence the plates P may be either directly in front of the tool or following it, but if the work W has been turned true and parallel, the plates P may be in front of the tool, or rather may lead it.

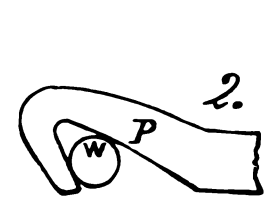

Fig. 811.

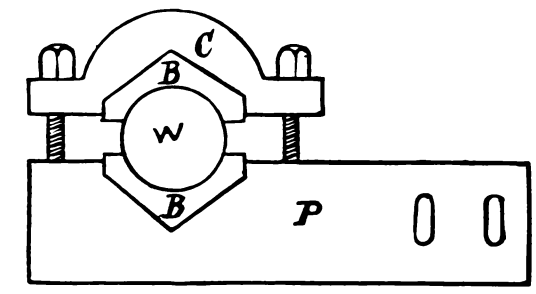

Fig. 812.

The follower rest should always be set to the work when as near as practicable to the dead centre, in which case it will be easier to set it without springing the work.

For work of small diameter for which the plates P would be too large, and therefore in the way, the plate P, Fig. 811, may be used, being bolted to the follower rest. For work of larger diameter the device shown in Fig. 812 is sometimes used. It consists of a

plate P with a cap C, and bolts for holding the bearings B, B. These bearings are bored slightly larger in diameter than the finished diameter of the work.

The advantage of the use of this device is that bearings of the requisite bore having been selected they may be inserted and adjusted a proper fit to the work before P is fastened to the follower rest, thus avoiding the liability of being either too tight or too loose as may happen when the plates cannot be moved or rotated to test the fit. Another and great advantage is that if after the adjustment of the bearings B, B to the work, the plate P is carefully bolted to the follower rest, the liability of springing the work is eliminated, hence truer work will be produced.

A representative of another class of follower rest is shown in Fig. 813, the hub H is accurately bored to receive collars or rings

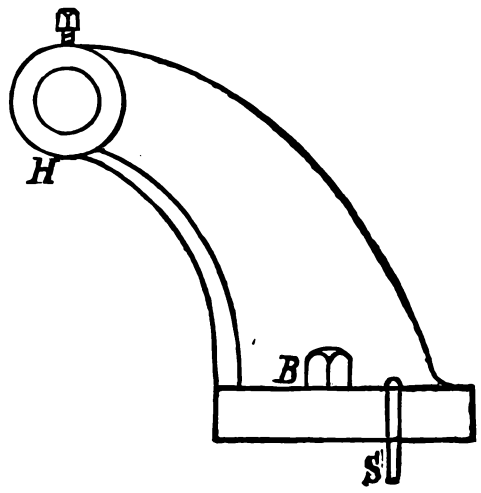

Fig. 813.

of various diameters of bore to suit the work. The bore of H may be made to stand axially true with the lathe centres, and thus avoid the trouble of setting, by employing the steady pin S, which, being a close fit in the follower rest and in the lathe carriage will bring the rest to its proper distance from the lathe centres, where it may be secured by the bolt B, which may screw into the metal of the carriage or operate to lift a wedge or guide slip so as to

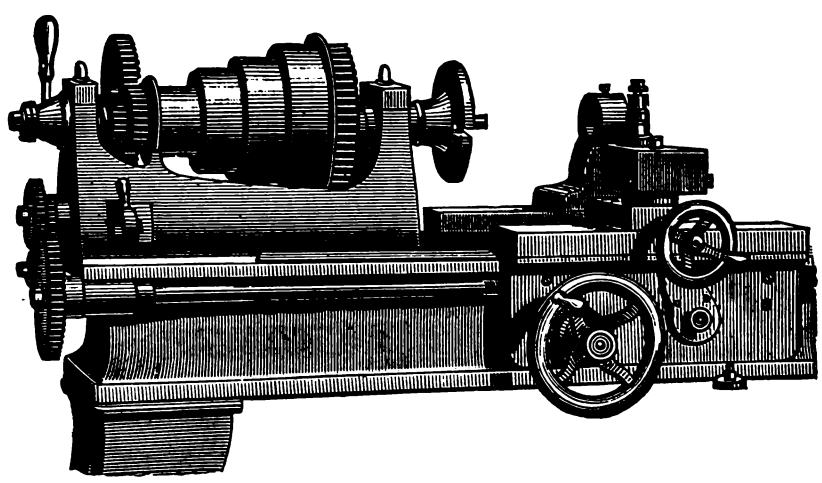

Fig. 814.

grip the V-slide of the carriage and take up any lost motion between the slide in the rest and that in the lathe carriage.

Fig. 814 shows a follower rest in position on the cross slide of a lathe.

Chucks and Chucking.

There is a large class of small work that could be held between the lathe centres, but that can be more conveniently held in chucks. Chucks are devices for holding work to the live spindle, and may be divided into classes as follows:

1st. Those in which the work is secured by a simple set-screw.

2nd. Drill chucks, which are applied mainly to drive drills, but which may also be used to drive very small work to be operated upon by cutting tools, the mechanism causing the jaws to move simultaneously to grip or release the work.

3rd. Independent chucks, in which the jaws are operated separately.

4th. Universal chucks, which are larger than drill chucks, and in which the jaws operate simultaneously.

5th. Combination chucks, in which the jaws may be operated either separately or simultaneously as may be required.

Referring to the first, Fig. 815 represents a simple form of set-screw chuck, the stem S fitting into the live centre hole, and the outer end being pierced to receive a drill shank, and the iron from which a piece of work may require to be turned, which is secured in the chuck by the set-screw B. In the case of drill or other

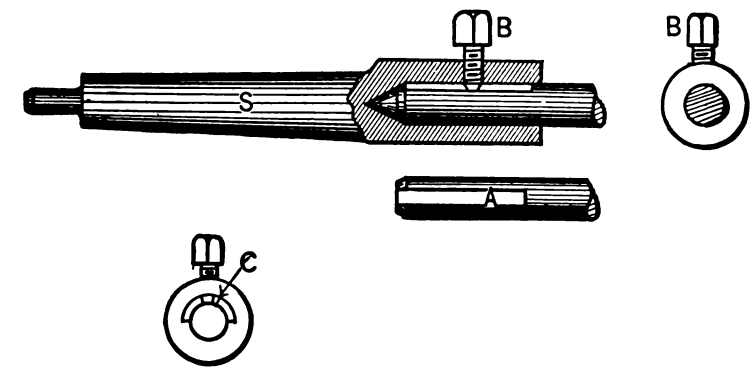

Fig. 815.

cutting tools, however, it is better that they be provided with a flat place A, to receive the set-screw pressure, and enable it to hold them more securely. The objections to this class of chuck are threefold: First, each chuck is suitable for one diameter of work only; secondly the screw head B is in the way; and thirdly, the set-screw pressure is in a direction to set the work out if true, which it will do unless the work is a tight fit to the bore of the chuck. In this case, however, it is troublesome to insert and remove the drill, unless the bore of the socket is relieved on the

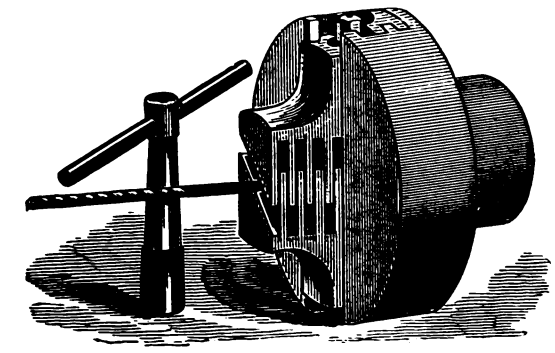

Fig. 816.

half circumference nearest to the set-screw, as shown at C in the end view, in which case the efficiency of the chuck is greatly enhanced.

Referring to the second class they are made to contain either two or three jaws.

When two jaws are employed they are made to slide in one slideway, and are operated therein by a right and left-handed screw, causing them to simultaneously advance or recede from

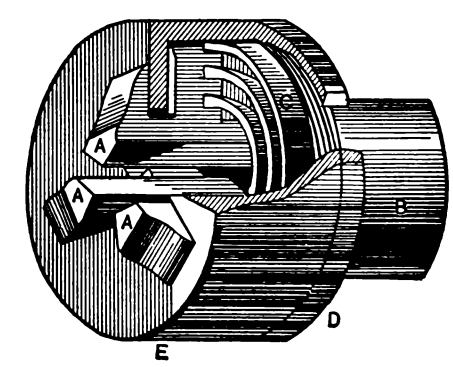

Fig. 817.

the chuck axis. Fig. 816 represents a chuck of this class, the jaws fitting one into the other to maintain each other in line, and prevent their tilting over from the pressure.

In scroll chucks the mechanism for operating the jaws is constructed upon two general principles. The first may be understood from Fig. 817, in which the body of the chuck is provided upon its end face with a scroll C, with which the ends of the jaws A engage. These jaws fit into radial slots in the shell E, which is

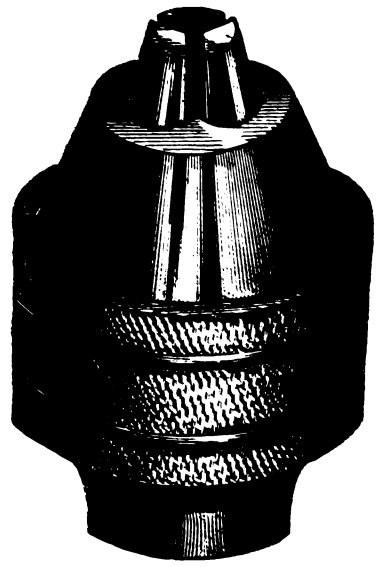

Fig. 1.

Fig. 2.

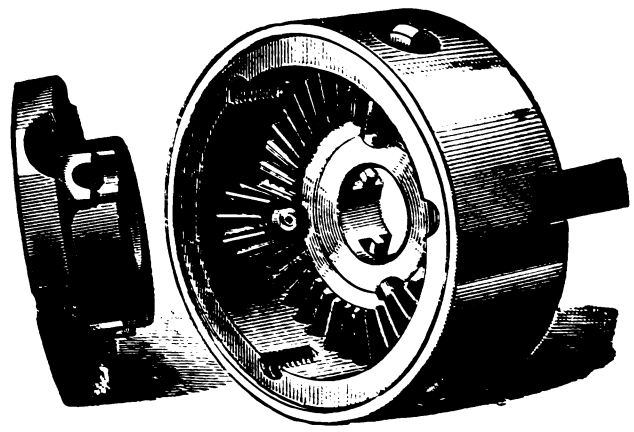

Fig. 3.

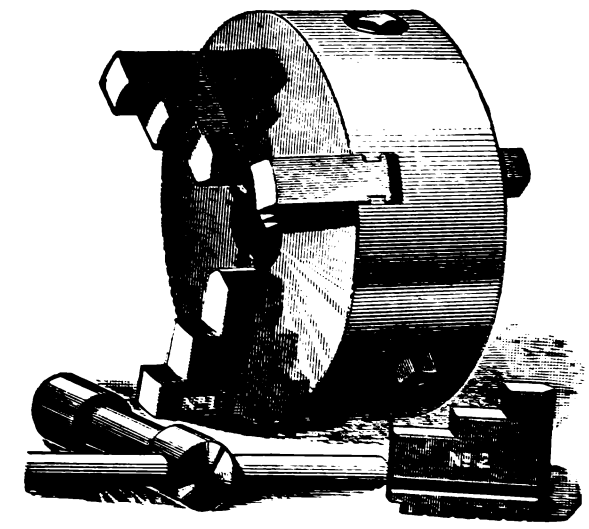

Fig. 4.

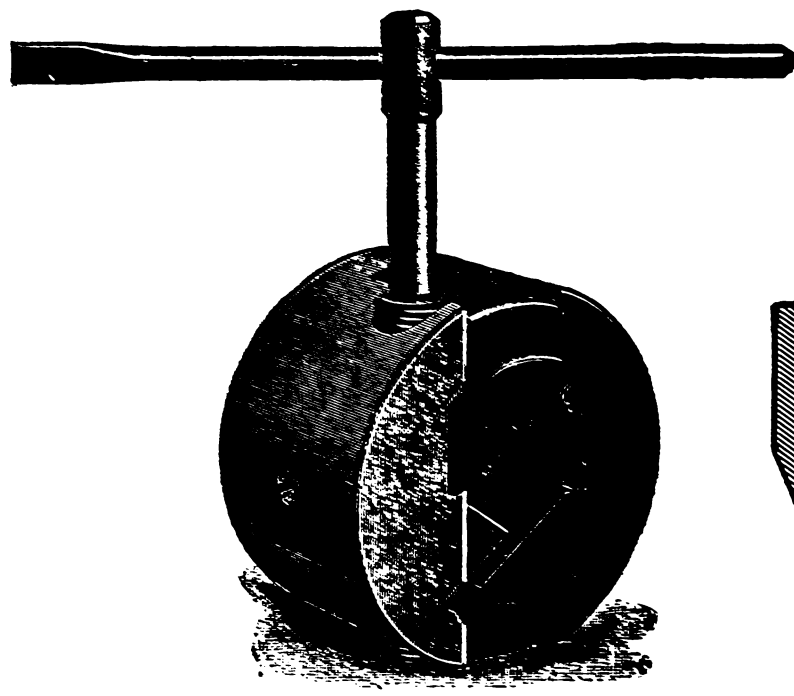

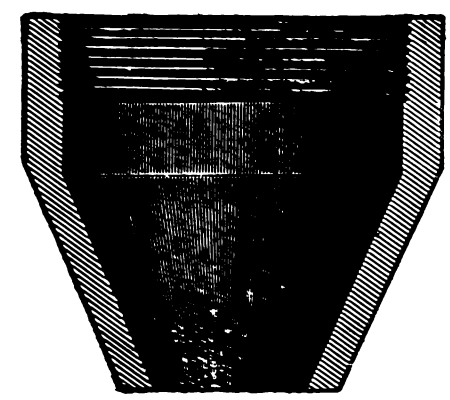

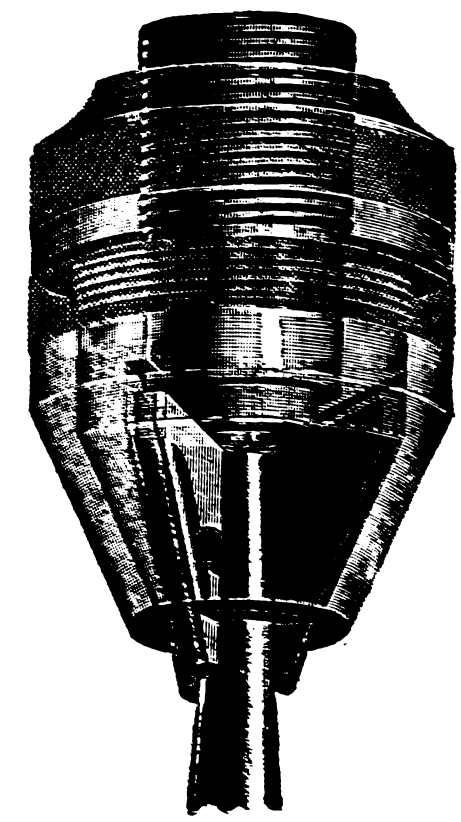

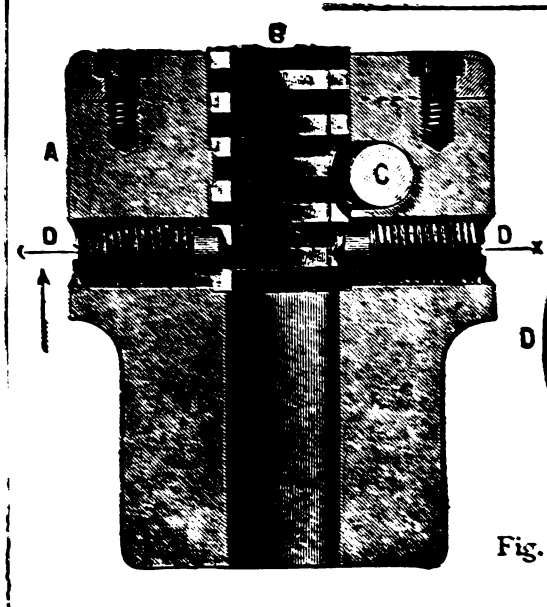

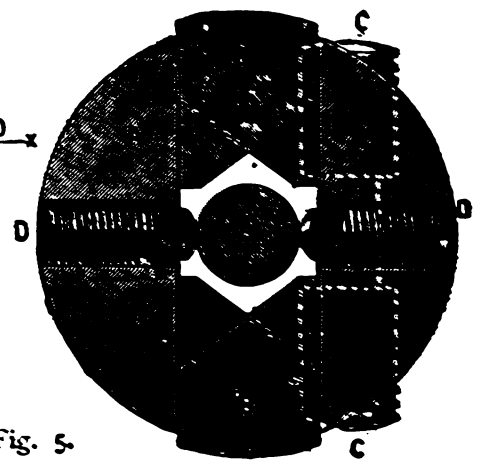

Fig. 5.

Fig. 6.

capable of rotation upon B and is held thereto by the cap D; hence rotating E carries around the jaws A, and the thread C causes them to approach or recede from the chuck axis, according to their direction of rotation.

The second general principle upon which small drill chucks are constructed may be understood from Fig. 818, in which C may be

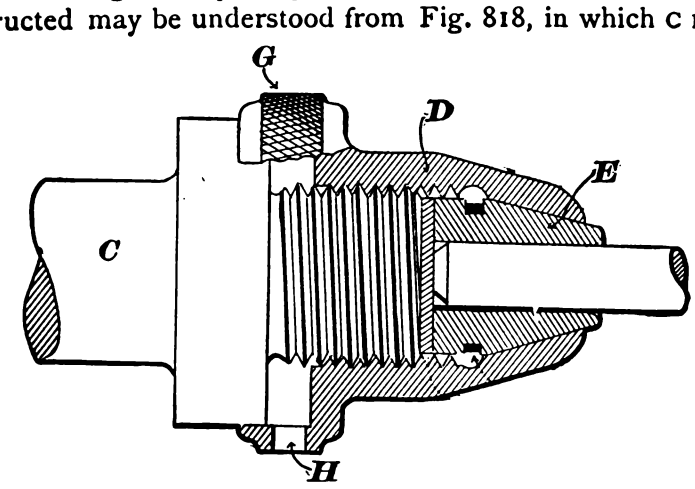

Fig. 818.

taken to represent the end of a lathe spindle or stem fitting into the live centre hole in the same. At the other end it is to receive the shell D which screws upon it. D is coned at the outer end of its bore, and the jaws E are made to fit the cone; and it is obvious that if D be rotated to screw farther upon C the coned bore of D will act to force the jaws E nearer to the chuck axis, and cause them to close upon and grip the work. To operate D it is knurled or milled at G, or it may have pin spanner holes, as at H. In this class of chuck it is essential that the direction of rotation of D to close the jaws must be opposite to that in which the drill rotates, otherwise the resistance of the work against the jaws would cause D to rotate upon C, and the work to become released from the jaw grip. Furthermore, as the larger the work the more severe the duty in driving it, it is usually provided by the construction of such chucks that the jaws shall be opened to their maximum when at their nearest approach to the body (as C) of the chuck, and shall close as they move outward or away from the same. This principle of moving the jaws radially by means of a cone sliding upon a cone is applied in numerous ways; thus sometimes the jaws are provided with wings that slide upon a cone, or in slide ways that are at an angle to the chuck axis.

Figs. 1 and 2 (Plate LVI.) represent T. R. Almond's chuck, in which there are three jaws or gripping pieces B, operated by the pieces C which are in the body A of the chuck.

Figs. 3 and 4 (Plate LVI.) represent the D. E. Whiton Machine Company's geared scroll chuck, in which the body of the chuck is in one piece, and intended to be attached to the face plate of the lathe, or drilling machine, as the case may be.

The bevel gear shown is engaged by three pinions, and may therefore be operated by either one of the three, and when the work is gripped, each of the pinions should be operated to bring the strain equal on all; the scroll that operates the gears is on the front face of the bevel gear.

What is known as the little giant drill chuck is shown in three views, in Fig. 5. Here we have the movable jaws B operating by means of screws C in sideways provided in the body A of the chuck.

After the work has been gripped by the jaws, screws D, D, may be operated to give an additional grip, greatly enhancing the holding power of the chuck.

Various styles of chuck jaws are shown in Figs. 819, 820, and 821. Fig. 819 represents the form known as the common or lathe jaw, and is designed for holding rods or drills and pieces to be gripped from the outside. Fig. 820 is for rings or hollow work which the jaws will grip inside, the jaws being operated outwards. Fig. 821 is for rods and drills only, and hence the jaws do not project far out from the chuck face.

It is obvious that in all these foregoing forms of chucks, the gripping faces of the jaws, being parallel, are suitable for holding only parallel pieces, and a separate form of jaw must be used if taper shanked drills are to be held in the chuck. This is provided for in the Skinner chuck, shown in Fig. 6 (Plate LVI.).

The outer rounded edge of the jaws comes in contact with the

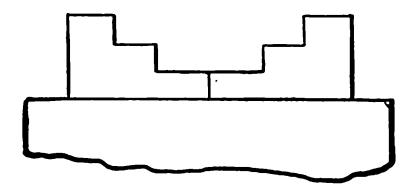

Fig. 819.

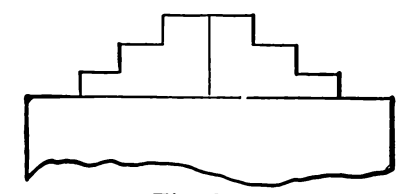

Fig. 820.

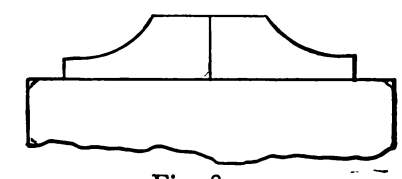

Fig. 821.

inner surface of the cap, and the inner or gripping edge is made at such an angle to it as to make it fit the standard taper shank. When the body of the chuck is turned by the hand in the usual manner, it is screwed back upon the threaded stem which is in the centre of the chuck, the conical end of which, coming in contact with the back end of the jaws, forces them together, thus gripping the shank.

Figs. 822 and 823 represent a chuck employed by the Hancock Inspirator Company, of Boston, for very true work. This chuck will not get out of true by wear, and holds brass work against good lathe-cut without indenting it.

Fig. 822 shows the chuck complete. Fig. 823 is a mid-section of chuck complete. Fig. 824 is a side and an end of the work gripping piece. The chuck is composed of three pieces, A, B, and

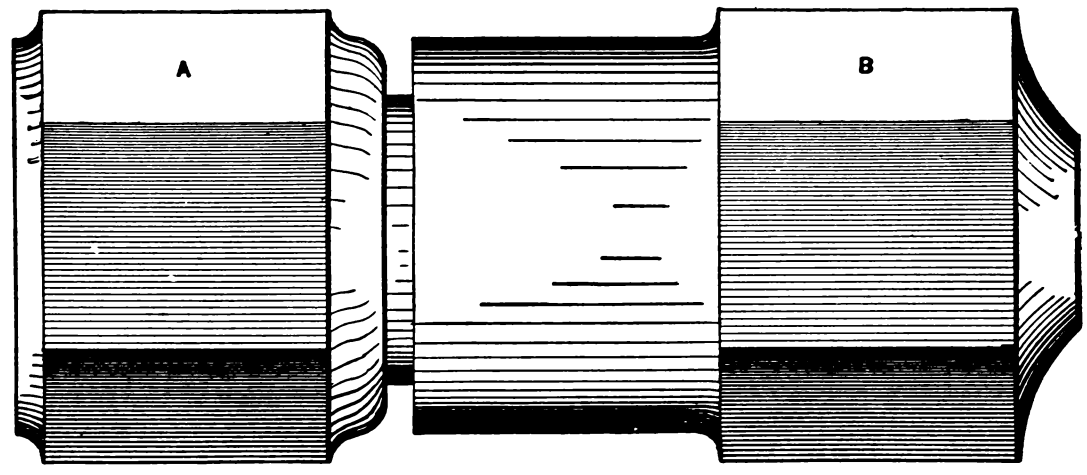

Fig. 822.

C. Piece A screws upon the lathe spindle, and is bored to receive C; piece B screws upon A and receives the outer end of C, which is provided with a double cone D, E, and is split nearly its full length at three places, one of which is shown at F, so that when B is screwed upon A, the two cones upon A, B, compress C, and cause the diameter of its bore to decrease and grip the work. The splits are made long, so that C shall not close at its outer end only, but on both sides of the cones, and thus grip the work parallel.

There are several advantages in this form of construction; thus,

the parallel bore of A, in which C fits, is not subject to strain or wear, and therefore remains true and holds C true. Furthermore, B has no tendency to wear out of true, because it fits upon A at the part G, as well as at its threaded end, while the cone E of C also acts to keep it true. As B is screwed up with a wrench fitting its hexagon exterior, the work can be held against any amount of cut that the lathe will drive.

It is obvious that the capacity of the chuck, so far as taking in range of different diameters, is quite limited, but the excellence of its execution far more than compensates for this when work is to be turned out true and correct to standard gauge.

To increase the range of capacity of the chuck, the split piece only needs to be changed. Before hardening the split piece the jaws should be sprung well apart, so that they will spring open when released by unscrewing the outside shell to release the work and insert another piece.

In proportion as the diameter of the work is increased it requires to be more firmly held, and the chucks are made with jaws moved by screws operated by wrench power. These chucks are made with two, three, or four jaws, and the bite of the jaw is shaped to suit the nature of the work, the gripping area being reduced for very small work, and serrated parallel to the chuck axis so as to form gripping teeth for firmly gripping rough work, as shown in some of the following examples :—

Figs. 825 and 826 represent the Horton two-jawed chucks with false or slip jaws, which are removable so that jaws of various shapes in the bore may be fitted to the same chuck, thus enabling the jaws to be varied to suit the shape of the work to be held. The jaws are secured in place by the pins shown.

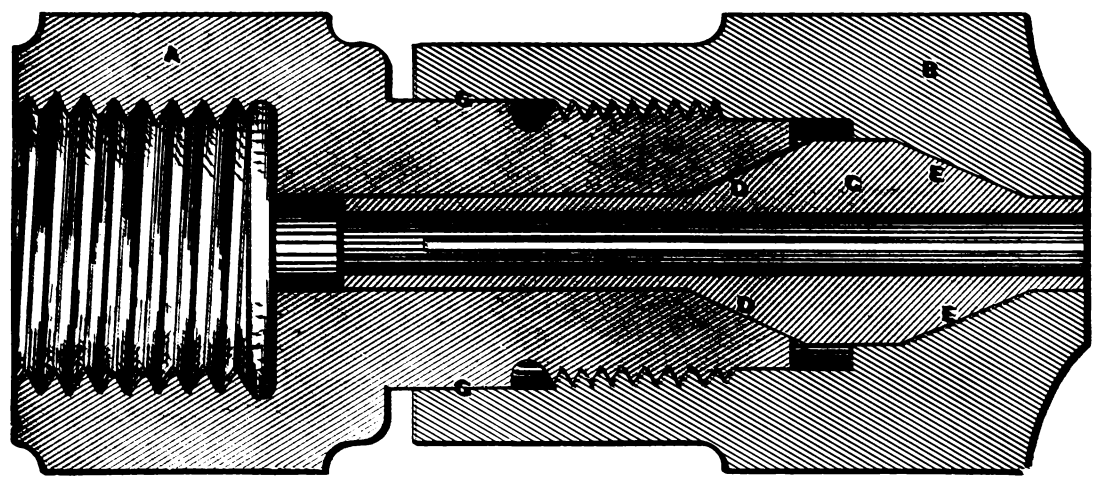

Fig. 823.

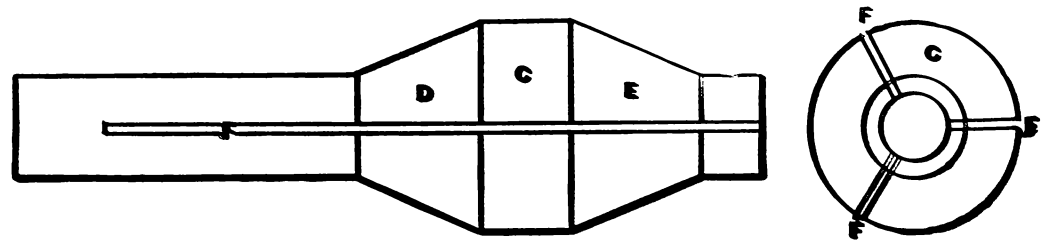

Fig. 824.

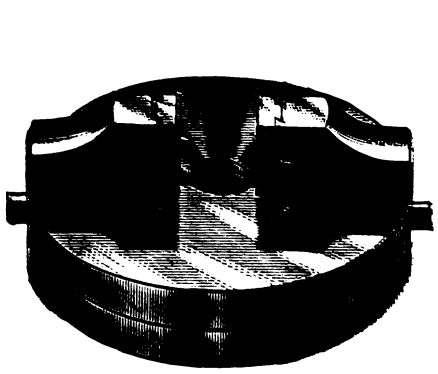

Fig. 825.

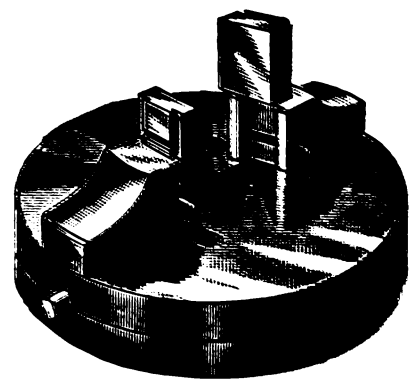

Fig. 826.

Fig. 827 shows a two-jawed solid jaw chuck, the bite of the jaws being made hollow, so as not to mark the surface of the work, while they will hold it very firmly.

In Fig. 828 is shown what is termed a box-body two-jawed chuck, which is mainly used by brass turners. The object of this form of body is to permit the flanges, &c., of castings escaping the face of the chuck.

Fig. 829 also represents a two-jawed chuck, the body being cylindrical, and having a V-groove at A to receive the work. The screws C, D may act independently of each other, or a continuous screw may be used, having, as in the figure, a left-hand thread at C, and a right-hand one at D, so that the jaws move simultaneously when the screw is operated. The difference between these two methods being as follows :—

When one screw is used the jaws will hold the work so that the centre of rotation will be midway between the points of contact of the jaws of the chuck and the work, hence work cannot be set eccentrically, unless pieces of iron are inserted between it and one of the jaws. When two screws are used the jaws may be operated separately, and one jaw may be set to such distance from the centre of rotation as the necessities of the work may require; but in this case more adjustment is required to set either square or cylindrical work to rotate on its axis than when the jaws operate simultaneously as with a right and left-hand screw. It is obvious that the axial line of the screw or screws must stand parallel with the plane of the face F. It will be observed that the back of each jaw is cut away at B: this serves two purposes, first it permits of a piece of work having a small flange, head or projection being held in the Vs of the jaws; and secondly, it equalizes the wear on the jaws of the chuck, because in jaw chucks generally there is more wear at the outer than at the inner end of the jaws, because work shorter than the length of the jaws, or requiring to be held as far out from the jaws as possible, does not have contact at the back end of the work holding jaw faces, hence the jaws are apt to wear, in course of time, taper. By cutting away the jaws at the back, the tendency to unequal wear is greatly reduced, hence this plan is adopted to a more or less

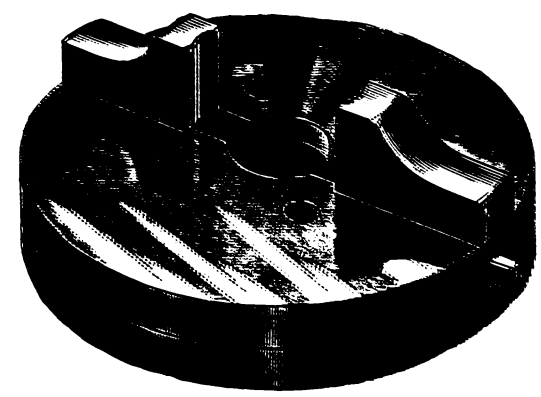

Fig. 827.

degree in the dogs or jaws of all chucks, being in many cases merely a small recess from $\frac{1}{16}$ to $\frac{1}{8}$ inch deep only.

When the jaws have a V-groove as in the cut, the face F of the chuck does not form a guide in setting the work, the truth of the V-grooves being solely relied upon for that purpose.

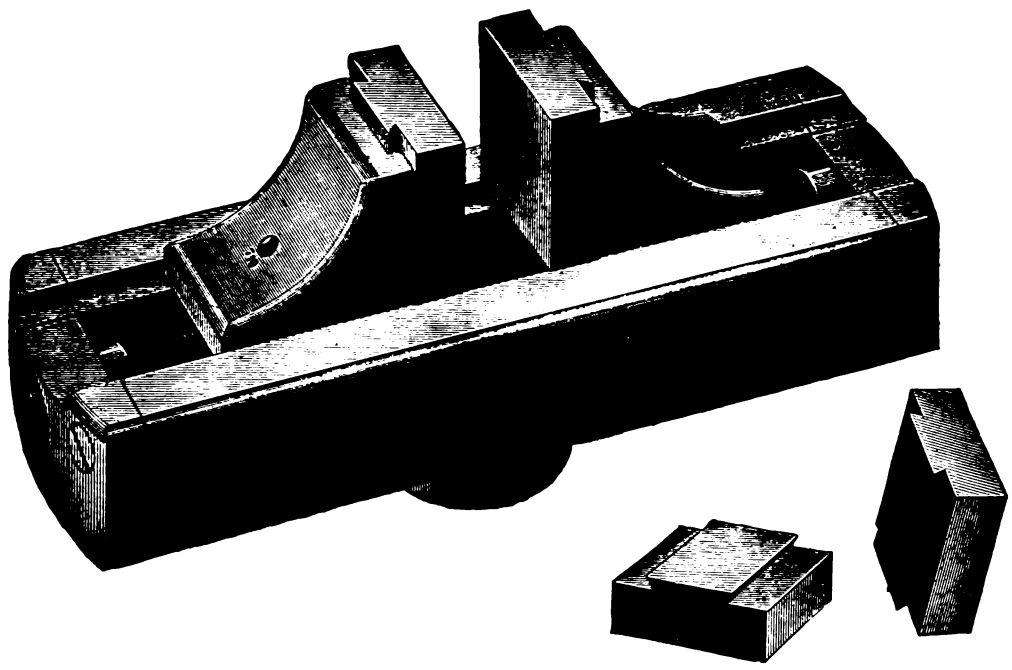

Fig. 828.

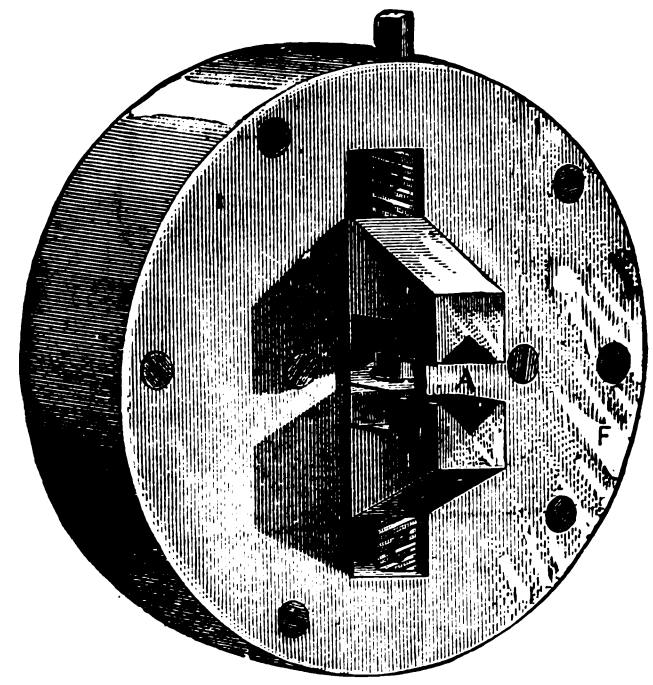

Fig. 829.

may be employed to serve as a guide in setting the work as shown in the cut, in which W represents a piece of work held between the jaws A, A, and resting against the face F, which therefore serves as a guide against which to set the work to insure that its axial line shall stand parallel with the face F, or in other words at a right angle to the line of centres of the lathe.

In Fig. 831 is an example of a machinist's two-jawed chuck. The jaws are operated simultaneously by a right and left-hand screw. The jaws are provided with slides to receive the two separate pieces shown in figure, which may be made to suit the form of special work. The two screws shown on each side of the chuck face are to support a piece of work that is too large to be otherwise held firmly by the chuck. These screws may be operated by screw-driver wrench, to enable the face of the work to rest on them, and therefore be supported parallel or true with the chuck

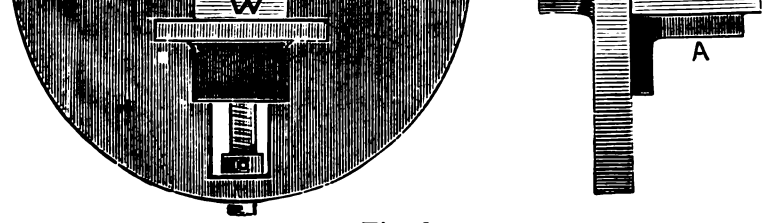

Fig. 830.

The form of two-jawed chuck shown in Fig. 830 is intended for square or rectangular work, and is mainly used by wood workers.

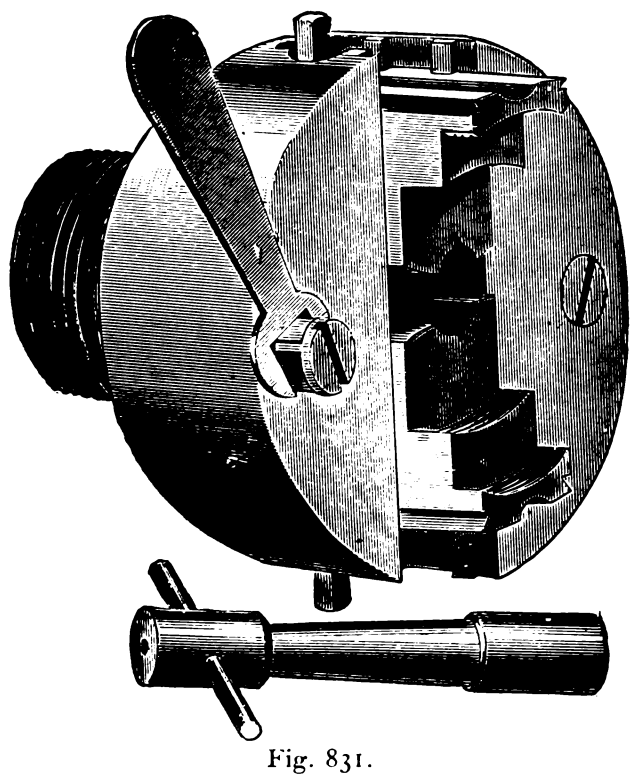

Fig. 831.

It may be operated by a right and left-hand screw, but is generally preferred with independent screws. The face F of the chuck

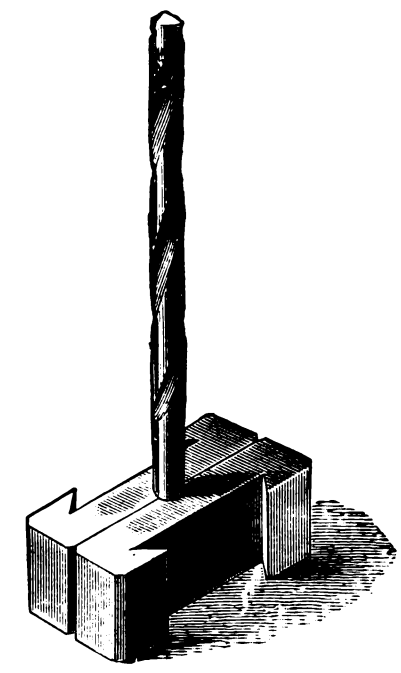

Fig. 832.

face. The jaws may be turned end for end in their slide ways as shown in Fig. 833, to enable them to grip work of small diameter, the separate pieces shown in Fig. 832, being placed on the jaws for such small pieces as drills, &c.

In the larger sizes, lathe chucks are provided with either three or four jaws, which are caused to operate either independently or simultaneously, and in some cases the construction is such that the same chuck may be used as an independent or as a universal one at will, in which case they are termed combination chucks. Concerning the number of jaws it may be observed that a three-jawed chuck will hold the work with an equal pressure on all three jaws, whether it be cylindrical or not, but in a four-jawed chuck the jaws will not have an equal grip upon the work, unless the

same be either cylindrically true or square, hence it is obvious that a three-jawed chuck is less liable to wear out of true, and is

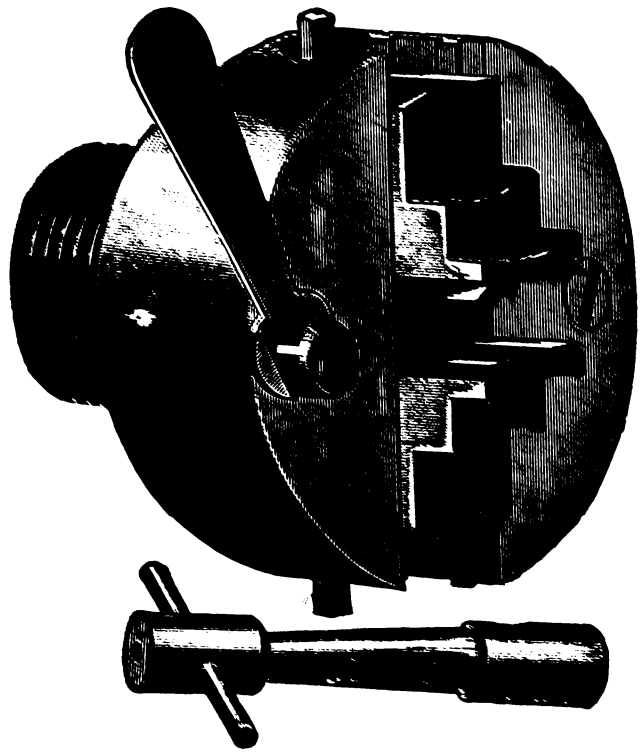

Fig. 833.

also preferable for holding unturned cylindrical work, while it is equal to a four-jawed one for true, but unsuitable for square work.

Fig. 835 represents one of the jaws with its operating screw and pinion removed from the chuck. The gripping surfaces of the steps in the jaws are serrated to increase their grip upon the work, and the nuts A, A, against which the works rests, are ground true with the face of the chuck. The corner between the faces A and the bite or gripping surfaces of the jaws are recessed so that the work cannot bind in them, but will bed fairly against the faces A, A, which serve to set the work against and hold it true instead of the face of the chuck.

Fig. 836 represents a Horton chuck for work up to four inches diameter.

Fig. 837 represents a similar chuck for all sizes between 4 and 15 inches, the designated sizes of the chuck being 6, 9, and 12 inches, these diameters being the largest the chucks will take in.

Fig. 838 represents a Horton chuck with outside bites for opening out to grip the bores of rings or other hollow work.

The term scroll chuck is applied to universal chucks in which the jaws are operated throughout their full range by means of a scroll thread such as was shown in Fig. 817. The objection to this form is that the threads on the jaws cannot be made to have a full bearing in the scroll thread.

In Fig. 839, for example, let A A and B B represent grooves between the scroll threads, and if the thread on the jaws be made to the curve and width of A A, it would not pass in that of B B, and *vice-versâ*, and it would take but five revolutions of the thread to pass a nut thread from A to B. To overcome this difficulty the jaw threads are not made correct to either curvature but so formed as to fit at points C, D, E, when in the groove A and at points F, G, H,

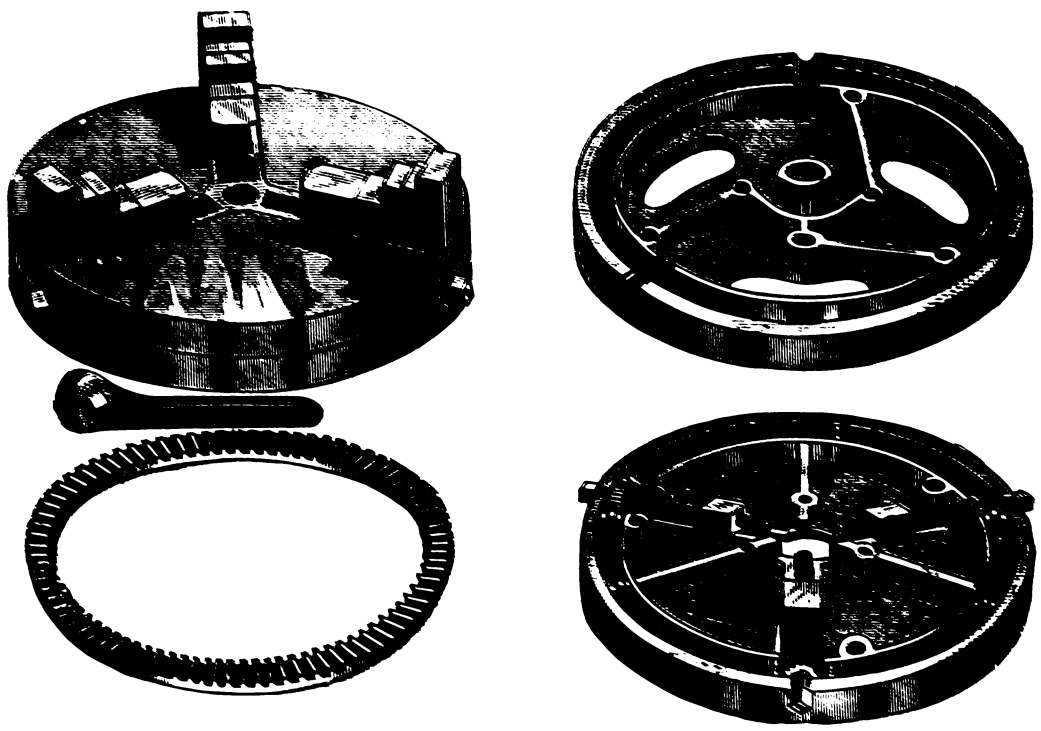

Fig. 834.

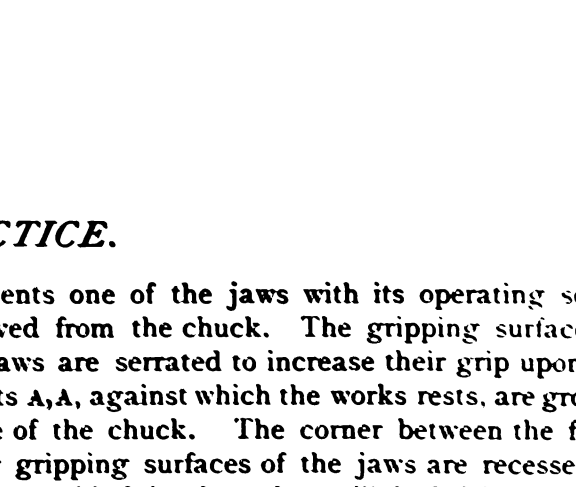

Fig. 835.

Fig. 834 represents the construction of the Horton chuck. Upon the screws that operate the jaws are placed pinions that gear into a circular rack, so that by operating one jaw with a wrench the rack is revolved and the remaining jaws are operated simultaneously. The chuck being constructed in two halves, the rack may be removed and the jaws operated separately, or independently as it is termed.

when in groove B. This obviously reduces their bearing area and therefore their durability. To avoid this defect the jaws of many universal chucks are operated by screws in the same way as independent jaw chucks, but provision is made whereby the operation of any one of the jaw screws will simultaneously operate all

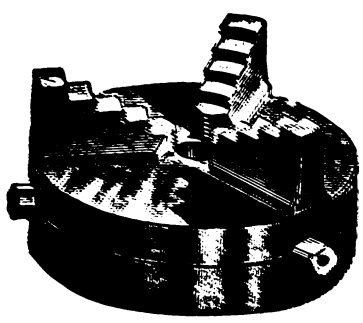

Fig. 836.

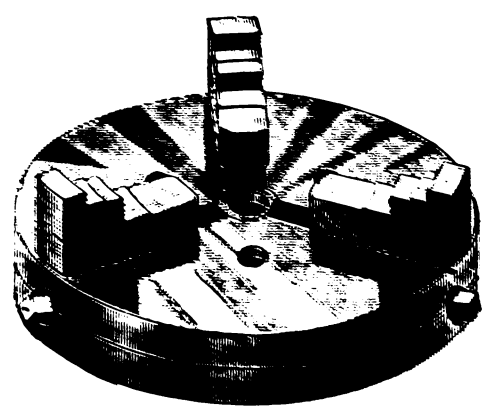

Fig. 837.

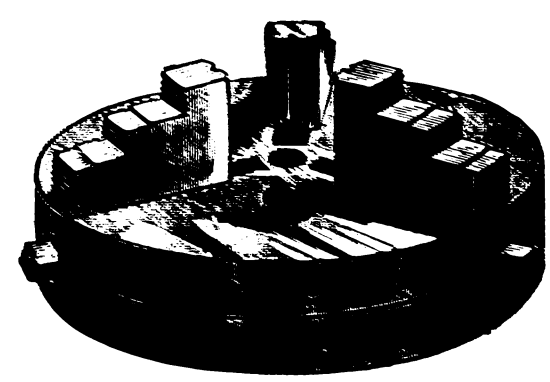

Fig. 838.

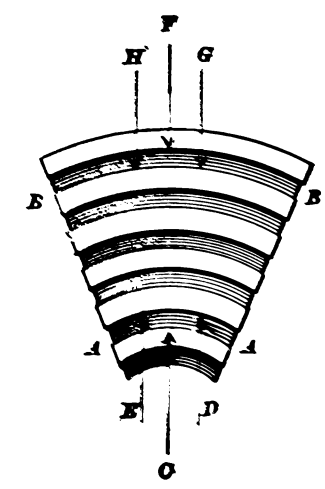

Fig. 839.

the others, so that all the jaws are moved by the operation of one screw.

Thus in the following figures is shown the Sweetland chuck.

Fig. 840 represents the chuck partly cut away to show the mechanism, which consists of a pinion on each jaw screw, and a circular rack beneath. The rack is shown in gear with a pinion at O, and out of gear with a pinion at C, which is effected as follows :—

The rack is stepped, being thicker at its outer diameter, and the thin part forms a recess and the shoulder between the thick

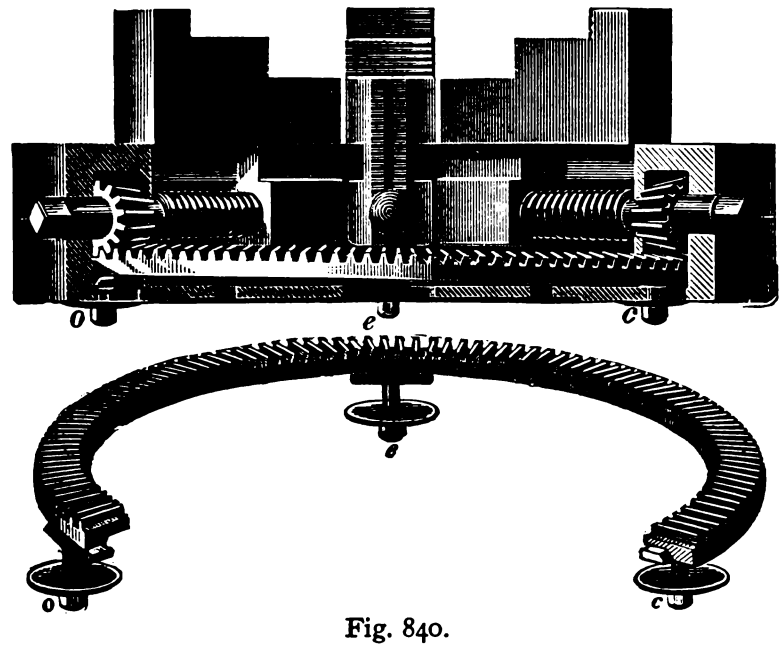

Fig. 840.

and thin part forms a bevel or cone. Between this circular rack and the face of the plate at the back of the chuck is placed, beneath each jaw, a cam block bevelled to correspond with the bevelled edge of the recess in the ring. The cam block stem passes through radial slots in the face of the chuck, so that it can be moved to and from the centre of the chuck. When it is moved in, its cam head passes into the recess in the ring rack, which then falls out of gear with the jaw screw pinion; but when it is

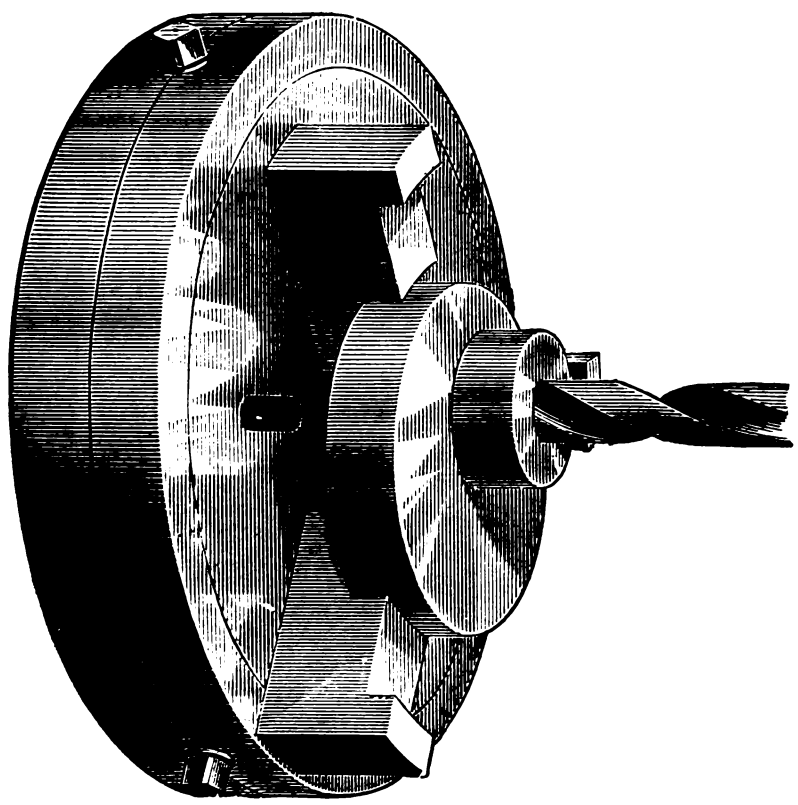

Fig. 841.

moved outward the cam head slides (on account of the bevelled edges) under the ring rack and puts it in gear with the jaw screw pinion. Thus, to change the chuck from an independent one to a universal one all that is necessary is to push out the bolt heads on the cam block stems, the said heads being outside the chuck. The washers beneath these heads are dished to give them elasticity and enable them to steady the cams without undue friction.

To enable the setting of the jaws true for using the chuck as a universal one, after it has been used as an independent one, a ring is marked on the face, and to this ring the edges of all the jaws must be set before operating the cams radially to put the rack ring in gear. In Fig. 841 a three jawed-chuck on this principle is shown acting as an independent one to hold an eccentric. On

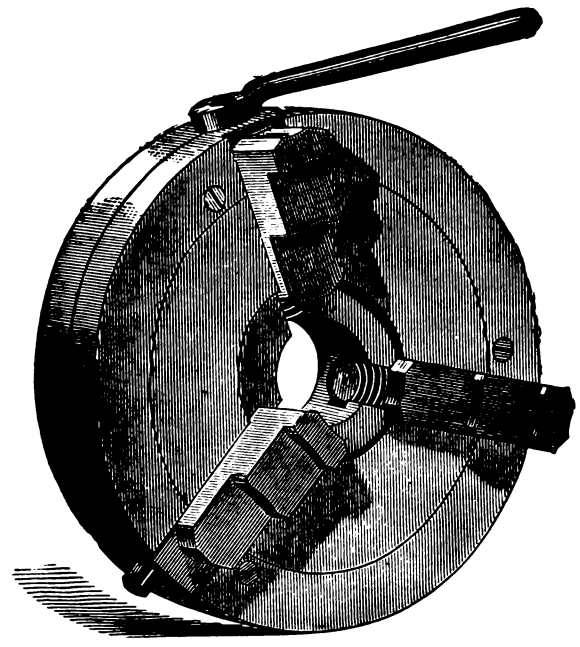

Fig. 842.

account of the spring of the parts, which occurs when the strain is transmitted from one part to another, it is desirable when using the chuck as a universal one to first operate one screw to grip the work and then pass to the others and operate them so that they may receive the pressure direct from the screw head and

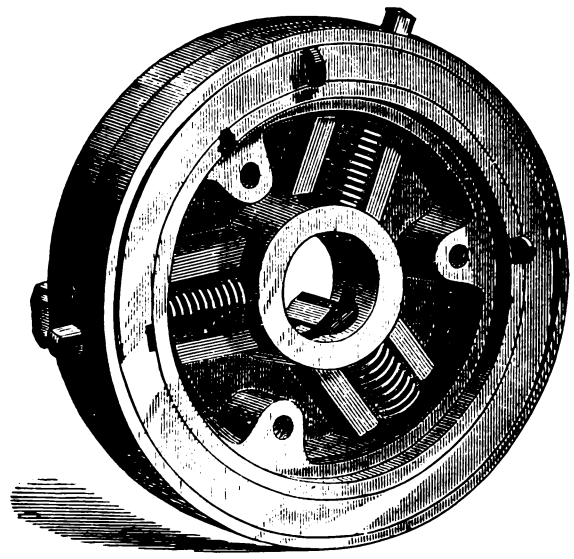

Fig. 843.

not entirely through the medium of the rack, and there will be found enough movement of the screws when thus operated to effect the object of relieving the rack to some extent from strain.

Figs. 842, 843, 844, and 845 represent Cushman's patent combi-

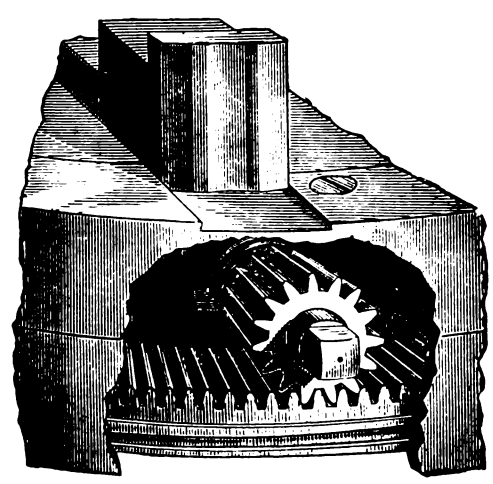

Fig. 844.

nation chuck, in which each jaw may be operated independently by means of its screw thread, or a circular rack may be made to engage with the respective pinions, as shown in Fig. 844, in which

case operating any one of the screws operates simultaneously all the jaws. The method of engaging and disengaging is shown in Fig. 845. C represents the circular rack and D a circular ring beneath it. This ring is threaded on its circumference, screwing into the body of the chuck, so that revolving it in one direction moves the circular rack forward and into mesh with the pinions, while revolving it backward causes the rack to recede from the pinions. To operate this ring the lug shown near the top of the chuck in figure is simply pushed in the required direction, while to lock the ring when out of gear with the pinions the spring catch shown on the left of that figure is moved radially. When the rack is in gear, the chuck is a universal one, all the jaws moving simultaneously and equally, whether they be set in such position in their slots as may be necessary to grip an oval or round piece of work; when the rack is out of gear the jaws may be moved by

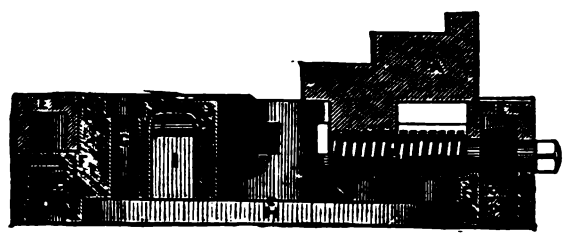

Fig. 845.

their respective screws so as to run true as for round work, or to hold the work to any degree of eccentricity required.

The jaws may be reversed in their slots and operated simultaneously as a universal chuck, or independently as a simple jaw chuck.

It is obvious that the truth of the jaws for concentricity may be adjusted within the degree of accuracy due to the number of teeth in one pinion divided into the pitch of the jaw operating screw, because each screw may be revolved separately to bring each successive tooth into mesh until the greatest obtainable jaw truth is secured.

Fig. 846 represents a front, and Fig. 847 a sectional view, of the Westcott combination chuck. F is the main body of the chuck screwing on to the lathe spindle. F carries the annular ring D,

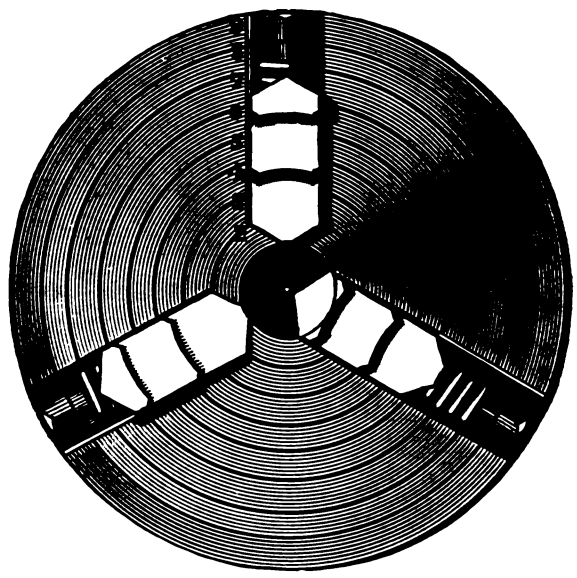

Fig. 846.

which has a thread on its face, as shown. D is kept in place by the ring E, which screws in an annular recess provided in the back of the chuck. C is a box fitting in the radial slots of the chuck. The back of the box C meshes into the radial thread on D, hence, when D is revolved, the boxes C move radially in the slots. Now the boxes C afford journal bearing to, and carry the worm or screws B as well as the chuck jaws A, hence revolving D operates the jaws simultaneously and concentrically as in a scroll or universal chuck. By means of the screws B, the jaws may be operated individually (the boxes C and ring D remaining stationary) as in an independent jaw chuck.

Suppose, now, the jaws to have been used independently, and that they require to be set to work simultaneously and concentric to the centre of the chuck, then the screws B may be operated until the jaws at their outer edge are even with the circumference of the chuck (or, if the jaws are nearer the centre of the chuck, they may be set true with a pointer), and the ring D may be operated. In like manner, if a number of pieces of work are eccentric, the screws B may be used to chuck the work to the required eccentricity, and when the next piece is to be chucked the ring D may be operated, and the chuck will be used as a universal one, although the shape of the work be irregular, all

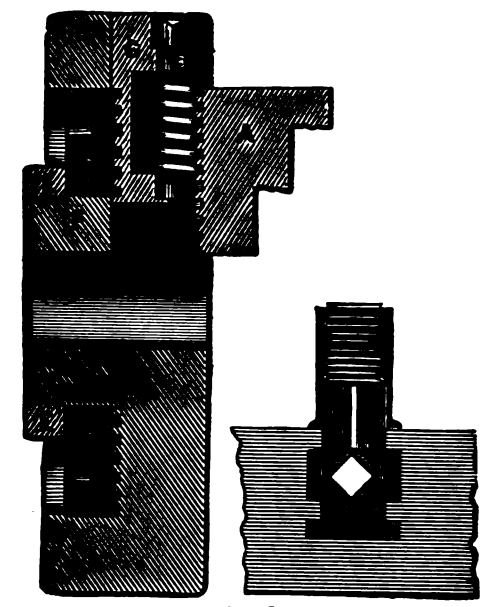

Fig. 847.

that is necessary being to place the same part of the work to the same jaw on each occasion.

The faces of the jaws of jaw chucks when they are true with the face of the chuck (or what is the same thing, run true, and are at a right angle to the axial line of the lathe centres), form guides wherefrom to set the work true, but this will only be the case when they remain true, notwithstanding the pressure of the jaws upon the work. Their truth, however, is often impaired by their wear in the chuck slots which gives them play and permits them to cant over. Thus in Fig. 848 is shown a chuck gripping a piece of work W, and it is obvious that to whatever extent the jaws may spring, or have lost motion in the ways or slots in the chucks, the jaws will move in the direction of the dotted lines A A, the face of the jaw then standing in the direction of dotted lines

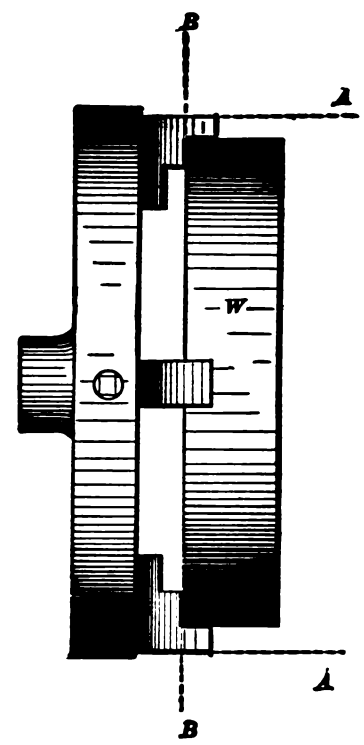

Fig. 848.

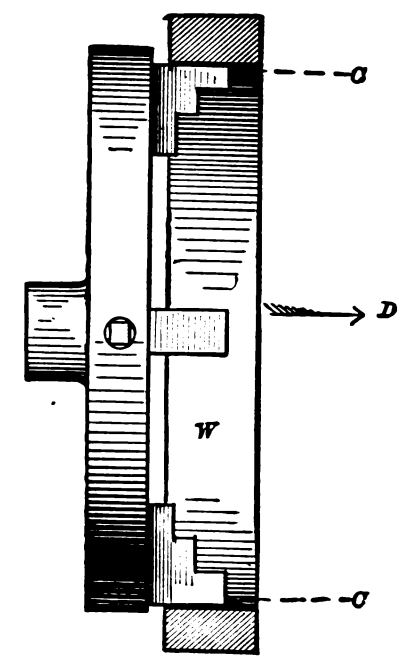

Fig. 849.

B B, instead of being parallel to the chuck face. If the spring or wear of the mechanism were equal for each jaw, the work would be held true, notwithstanding that the jaws be out of line, but such is not found to be the case, and as a result the work cannot be set quite true.

When the jaws are applied within the work, as in Fig. 849 (representing the jaws of the chuck within the bore of a ring or piece of work W), the jaws spring in the opposite direction as

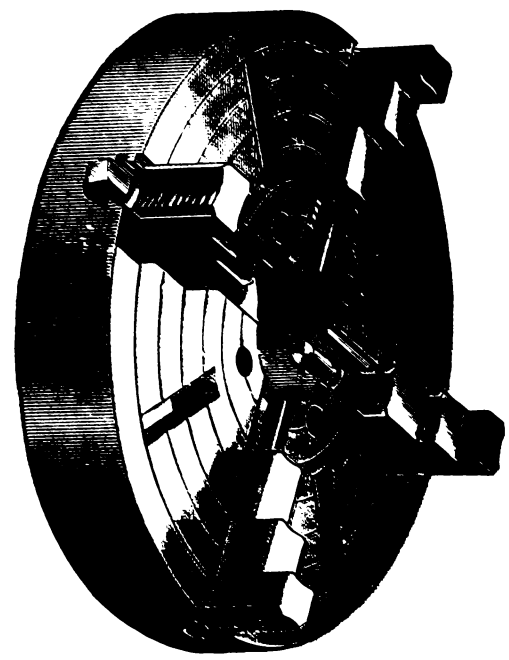

Fig. 1.

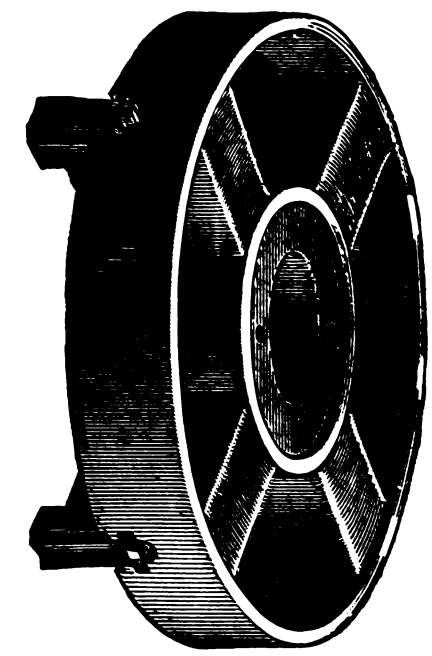

Fig. 2.

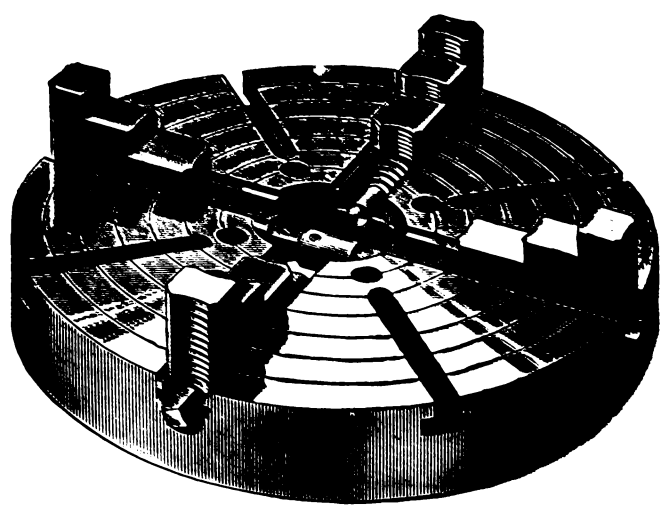

Fig. 3.

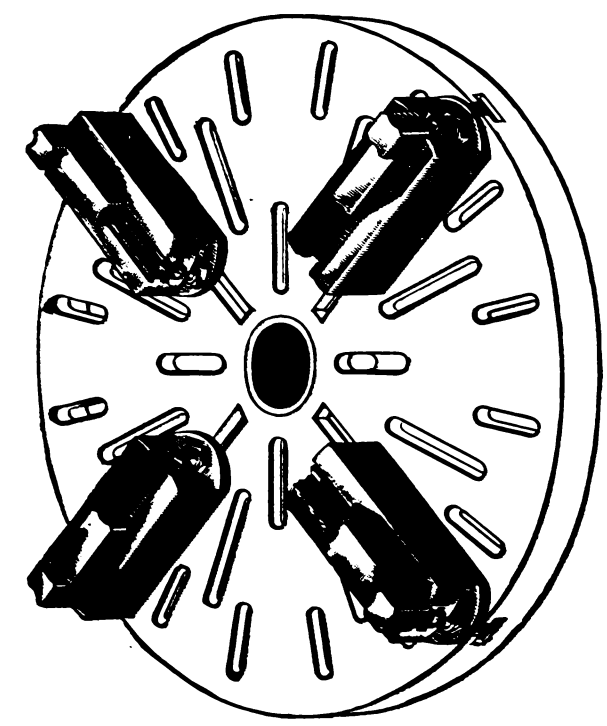

Fig. 4.

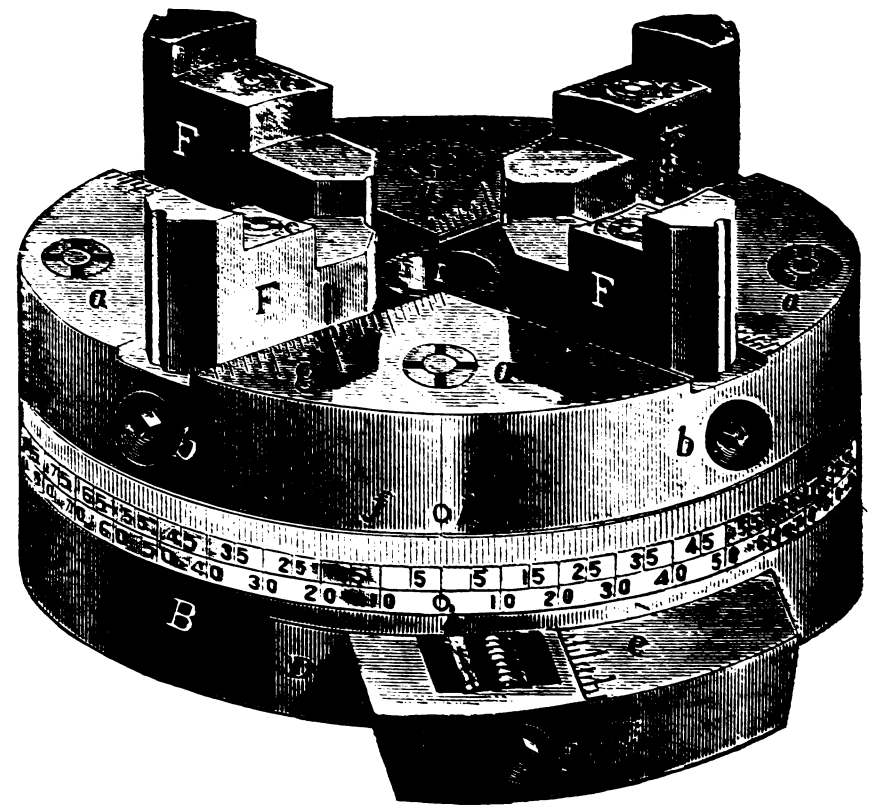

Fig. 5.

denoted by dotted lines C, C, and when the jaws are locked to the work the latter moves in the direction of D and away from the chuck face. It will be observed that there is no true surface to put the face of the work against in either case.

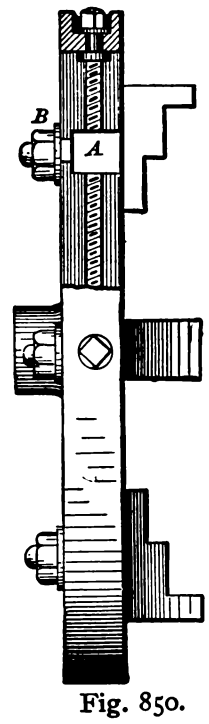

Fig. 850.

This is remedied in independent dog chucks by the construction shown in Fig. 850, in which each jaw has a square A, fitting in the grooves of the chuck, and a nut and washer at B secure the jaw to the face of the chuck so that the lost motion due to wear of the parts may be taken up.

Figs. 1 and 2 (Plate LVII.) represent a Cushman chuck having the feature that there are slots through which bolts may pass to hold the work in addition to the grip of the jaws. Fig. 3 (Plate LVII.) represents a chuck in which the jaws are independent, but two of them may be connected by the sleeve shown in the lower part of the figure. The connected jaws are used to centre the work before the other two jaws are tightened.

There are T slots also to receive bolts for holding the work in addition to the jaw grip. Fig. 4 (Plate LVII.) illustrates a Cushman chuck having four moveable jaws which may be reversed in their boxes.

Fig. 5 (Plate LVII.) represents a combination independent chuck designed and constructed by the E. Horton & Son Company.

A represents the front portion of the body of the chuck to which the jaws F are attached by means of bolts C, having screw nuts on the outer end, for convenience of reversing the jaws. The inner ends of the bolts are T-shaped, and take bearings on the inner side of part A, and are driven forward and backward by independent screws *b*, which work through bolts *c*. B represents the rear portion of the body of chuck, which is so constructed as to lock over the part A. The locking joint is fitted slightly bevelling, so that when drawn tightly together with bolts *a*, the parts become perfectly solid. The bolts *a* have on their outer end a screw nut. The inner ends have a T-shaped head, which fits into a circular T-shaped groove, formed in the part B, which, as shown in the cut, is graduated into degrees, each of which is equal to $\frac{1}{360}$th part of the entire circumference of the chuck. By loosening the nuts on bolts *a*, the index point on part A can be set to any desired division of the circle.

The sliding plate C is dovetailed through the rear side of part B, and clamped in any desired position by gib D, having tightening screws with countersunk heads. The sliding plate C is graduated into fractional parts of an inch, as shown at *e*, on each end, and adjusted by the driving screw *d*, which runs through the entire length of the plate C, working through a threaded nut well secured to part B, centrally located, in order that the sliding plate may have an equal adjustment in either direction, which in a 6-inch chuck is $2\frac{1}{4}$ inches. The face of the chuck is also graduated into fractional parts of an inch, as at *g*, and on the same side and at the same distance from joint of each jaw is a vertical line, in order that each jaw may be readily adjusted to the same radius.

When the chuck is eccentric, the orifice I extends entirely through the chuck. The sleeve J is securely fitted in the centre of the chuck, and forms a bearing for the inner end of driving screws *b*. As is shown by the figures, the cylindrical graduation commences at *h*, and runs to 90° each way, making 180 graduations, so that the chuck is graduated exactly half way around, thereby enabling the operator to accurately rotate his work to any desired degree or division of the entire circle; and by the use of the graduated plate C (which is secured to the mandrel of the lathe in the ordinary way), any point within the range of the chuck may be quickly brought to the centre of the mandrel of the lathe, or the position of the piece being worked may be changed to any extent without loosening the work in the chuck until the turning, or boring, is completed.

The jaws F are made with biting surfaces on each end, and can be easily reversed when so desired.

An excellent example of special chuck is shown in Fig. 853, representing a chuck for holding piston rings. It resembles a face plate screwing on the live spindle at B, and having 8 radial dogs or jaws A, let into the face D, and secured thereto (when adjusted), by the bolts and nuts E. A mandrel is fast in the centre of the chuck carrying the cone C, upon which rest the cone surfaces on the ends of the dogs A, so that screwing up C, by means of the nut shown, throws the dogs A outwards, causing them to grip the inside of the piston ring as shown in the face view of the chuck.

In Fig. 854 is shown Swazey's expanding chuck. B is the body of the chuck driven on an arbor A. The hub B is turned taper to receive a disc C, which is split partly through in three places, and wholly through at Z. By means of the nut and washer D, E, the disc is forced up the taper hub and caused to expand in diameter and grip the bore of the work, or ring R, the face of B serving to set the face of the ring against, to hold it true sideways.

The chucks employed by wood workers for driving work without the aid of the back or dead centre of the lathe are as follows:

On account of the fast speed at which the wood-workers' lathe revolves, it would be undesirable to have their chucks of iron, because of the time it would take the lathe to start them to full speed, and also to stop them after shifting the belt from the driving to the loose pulley of the countershaft, and further because

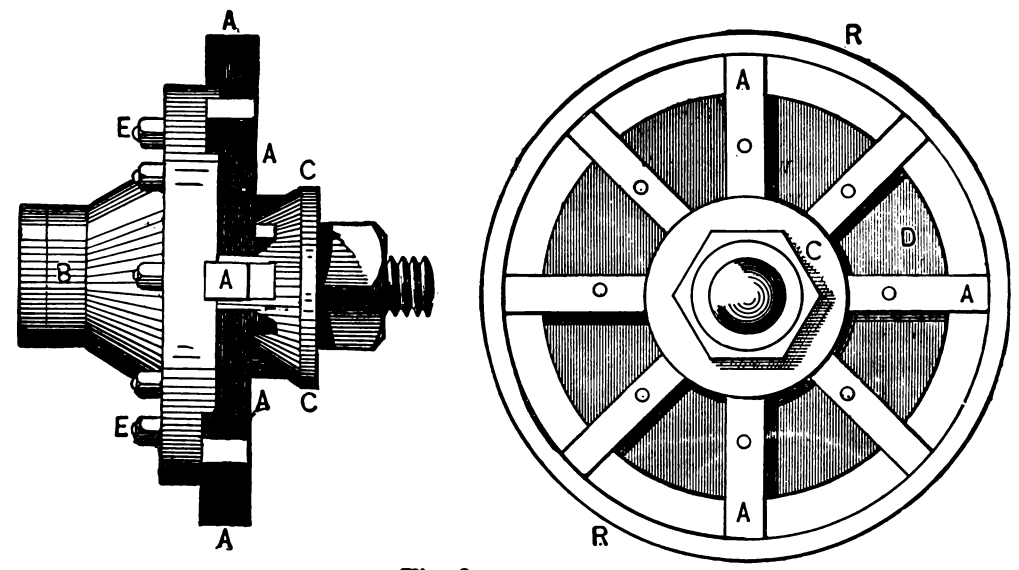

Fig. 853.

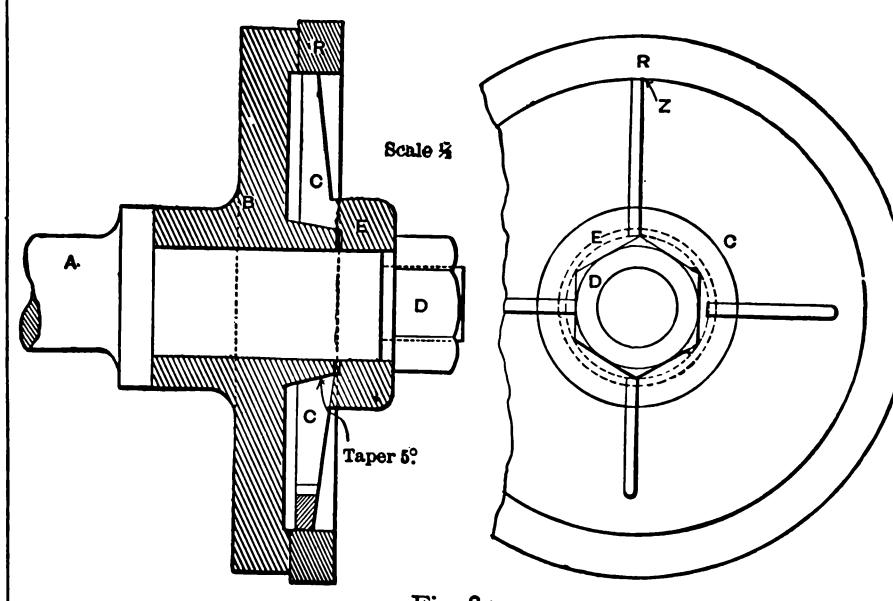

Fig. 854.

of the damage the tool edges would receive if they accidentally came into contact with the face of the chuck. For these reasons wood workers' chucks are usually built up upon small iron face plates.

Fig. 855 represents a cement chuck, consisting of a disc of hard wood A, screwed firmly to the face plate B; at C is a round steel point located at the axis of the chuck.

This chuck is employed to drive very thin work by the adhesion between the surface of the work and that of the chuck. The surface of the chuck is coated with a mixture of 8 parts of resin to one part of beeswax run into sticks. The chuck is waxed or cemented by rotating it at high velocity while holding the sticks

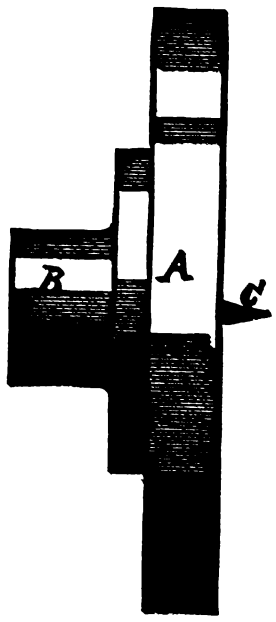

Fig. 855.

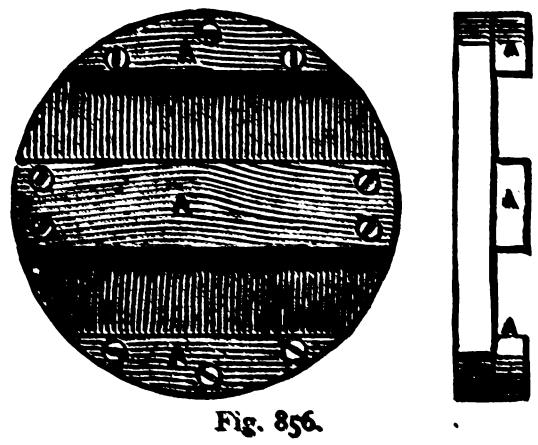

Fig. 856.

against it. The whole surface of the chuck being thus coated, the centre of the work is forced on the steel point C, and the lathe is kept running until the surface of the work nearly touches that of the chuck, when the belt is passed to the loose pulley overhead and the work forced against the chuck surface until it stops or else revolves the work against the hand pressure, the friction between the surfaces having melted the wax or cement, and cemented the work to the chuck. This leaves the face and the circumference of the work free to be operated upon. The work is removed from the chuck by the gradual insertion between the two of a long thin-bladed knife.

For work of large diameter, however, a mere disc of wood will

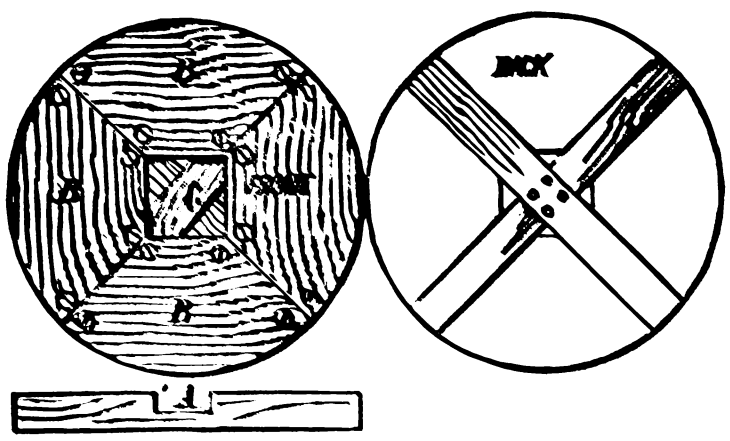

Fig. 857.

not answer, it being too weak across the grain: and here it may be remarked that the work often supports the chuck, and therefore we should always, in fixing, make the grain of the work cross that of the chuck, because the centrifugal force due to the high velocity is so great that both the chuck and the work have before now been rent asunder by reason of the non-observance of this apparently small matter. When it is considered that the chuck has not sufficient strength across the grain, battens should be screwed on at the back; but a chuck so strengthened will require truing frequently on account of the strains to which its fibres will be subjected from the unequal expansion or contraction of its component parts. Fig. 850 shows the back of a chuck strengthened by the battens A, A, A.

Another and superior method of making a chuck suitable for work of about the same diameter is shown in Fig. 857. Its construction enables it to better resist outward strains in every direction, while the strains to which it must necessarily be subject, from variations of temperature and humidity, are less than in the former. It will also be found that it can be trued with greater

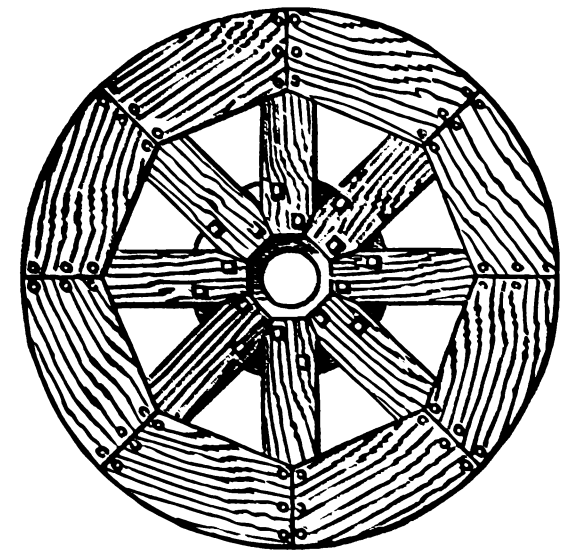

Fig. 858.

facility, especially on the diameter, as the turning tool will not be exposed to the end grain of the wood.

The crossed bars at the back of the chuck are half checked, as shown at A, so that both pieces may extend clear across the chuck and not terminate at the centre. They are fastened together at the centre by glue, and also with screws. Upon these bars as a frame, the four pieces composing the body or face of the chuck are fastened by both glue and screws. These pieces need not extend clear to the centre, but may leave an open square as shown, because the centre of a large chuck rarely requires to be used.

For very large chucks a cross of this kind would not afford sufficient strength, hence, the form shown in Fig. 858 is employed. The arms are bolted to an iron face plate, as shown, their number increasing with the diameter of the chuck. To keep the chuck true, the arms should have a level and fair bed upon the face plate, the segments composing the rim being fairly bedded to the arms and well jointed at the ends. They should be both glued and screwed, care being taken that the points of the screws do not meet the face of the chuck, in which case they would damage the turning tools used to true the chuck.

As wooden chucks are liable to warp and become out of true it is requisite to test them on each occasion before use, and true

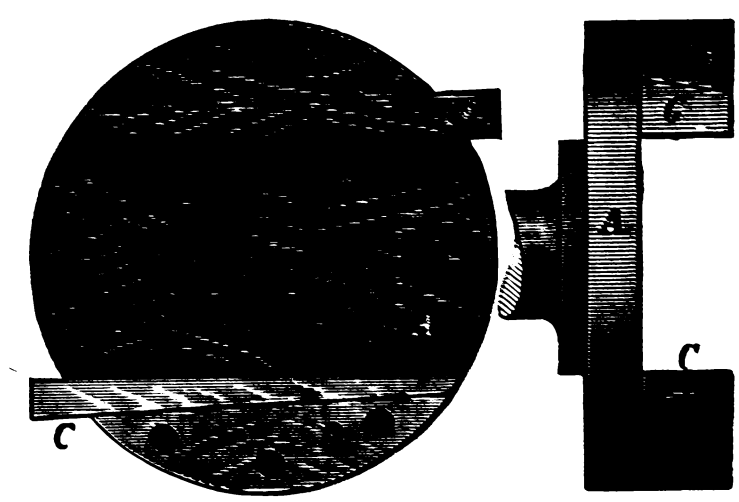

Fig. 859.

them if necessary. The work is fastened to these chucks by means of screws whose heads are sunk beneath the work surface a sufficient depth so that there is no danger of their coming into contact with the turning tools. In other cases the work is glued to the chuck, a piece of paper being interposed between the work and the chuck, which, by being damped, will enable the more ready removal of the work from the chuck.

Another form of chuck used by wood workers is shown in Fig. 859. It consists of a disc of wood A, screwed to the face plate

and carrying the two pieces B,B. The pieces C C are wedges which slide endways to grip the work. This chuck is especially handy for small work of rectangular form.

From the shape of some work, it cannot be chucked in jaw chucks of any description, and this is especially the case with work of large diameter, hence, large lathes, as, say those that will swing more than three feet, are not usually provided with universal chucks, although sometimes provided with independent jaw-chucks. So likewise in small lathes there are many forms of work that cannot be chucked in jaw chucks, and yet other forms that can be more conveniently held or chucked on face or chuck plates, &c.

If, for example, the surface of the chuck requires to be used in

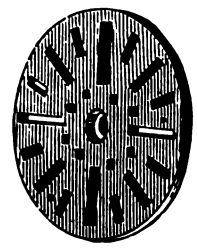

Fig. 860.

setting the work, the jaws will often be in the way of the tools or instruments employed to set the work. Again, there may be projections on the work which will require the body of the work to be held too far from the face of the chuck to enable its jaws to grip the work.

To meet the requirements of these classes of work chucking devices, which may be classified as follows, are employed:—

1st. Chucking by bolting work to the face plate or chuck plate with bolts and plates.

2nd. Chucking between dogs movable about the face chuck plate, and holding the work from that plate.

3rd. Chucking with the aid of the angle plate, or with the angle plate employed in conjunction with the chuck plate.

The chuck plate is simply a face as large in diameter as the

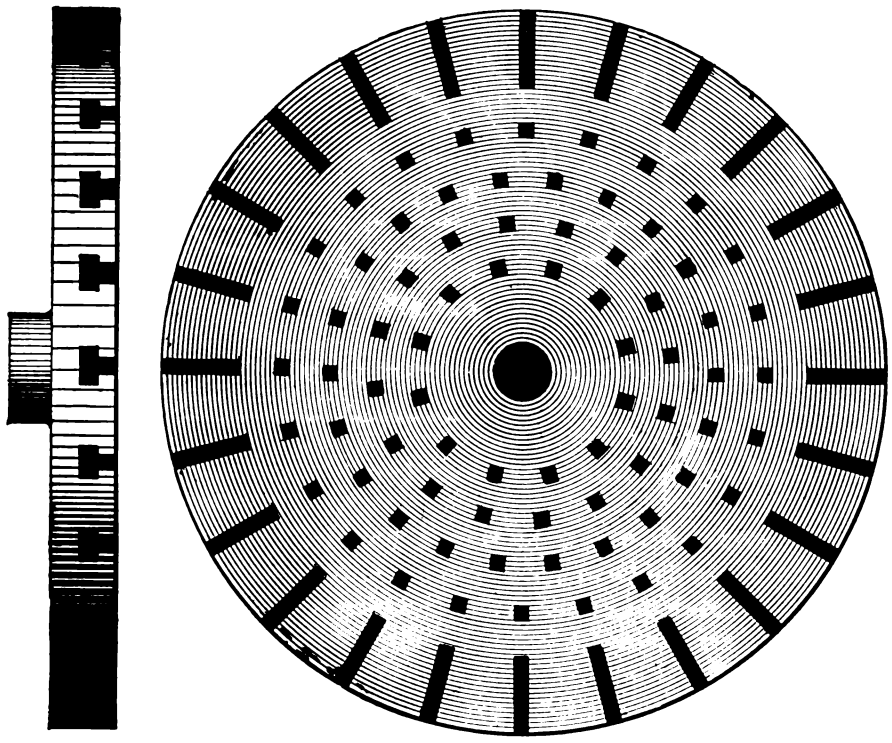

Fig. 861.

lathe will swing, and is sometimes termed the large face plate. Chuck plates for smaller lathes, as 30 inches swing, or less, are sometimes provided with numerous round or square holes to receive the bolts which hold the work, but usually with slots and holes as in Fig. 860. The larger sizes of chuck plates are similarly formed, but are sometimes provided with short slots that meet the circumference of the plate as in Fig. 861, which represents a chuck plate of the Whitworth pattern. The face of the chuck plate must be maintained true in order that true work may be produced, and it is necessary when putting it upon the lathe to carefully clean its threads and those of the live spindle, as, on account of its large diameter, a very little dirt between it and the live spindle will throw it considerably out of truth at the circumference.

It is better if there be any error in a chuck plate or face plate that it be hollow rather than rounding when tested with a straight-edge, because in that case a given amount of error in the plate will produce less error in the work.

In Fig. 862, for example, A represents a chuck plate hollow across the face, and B a link requiring to be bored through its

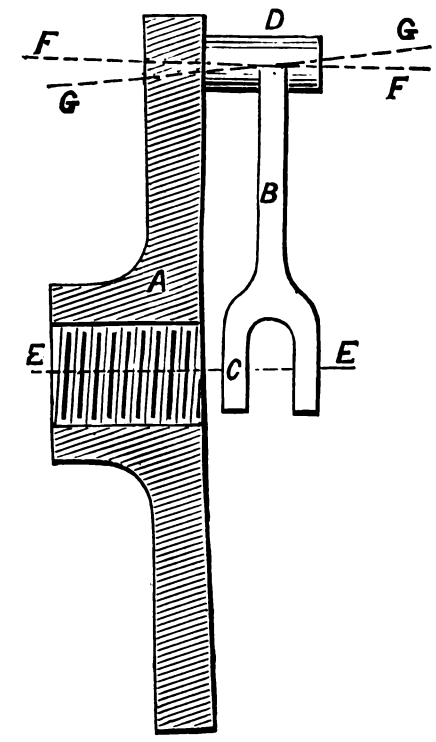

Fig. 862.

double eye C, the centre line of the lathe being line E E, and the centre line of the hole in the hub D of the link being denoted by F, and as E and F are not parallel one to the other it is obvious that the holes will not be parallel. Suppose, now, that the chuck face was rounding, and the centre line of D would stand at G G, and the holes in C and D would be out of true in the opposite direction. In this case the error would be equal, but suppose we have a ring or disc such as B in Fig. 863 to chuck by bolts and plates C,D and it will be chucked true, notwithstanding that the face of the plate

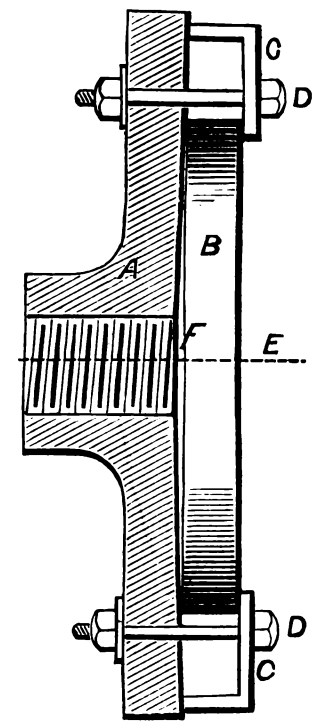

Fig. 863.

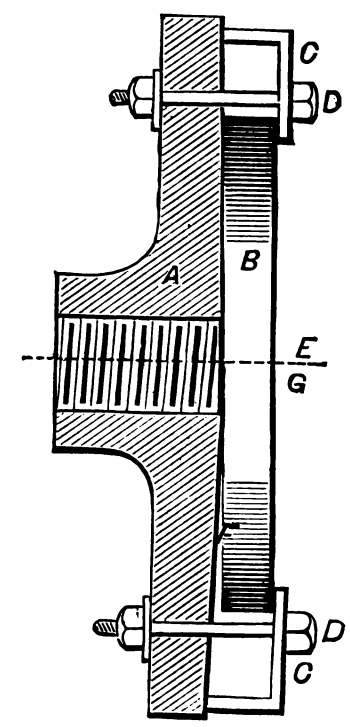

Fig. 864.

is hollow. But were the face of the plate rounding the disc may be chucked as in Fig. 864, the face F of the work not being held at a right angle to the line of centres E as it is in Fig. 863. The truth of the chucking in Fig. 864 depends upon whether the clamps C, were screwed up with equal force upon the work. A hollow chuck plate will lose this advantage in proportion as the work covers more of one side of the chuck plate than it does of the other, but in any event it will chuck more true than a rounding

one. Suppose we have, for example, a ring chucked eccentrically as in Figs. 865 and 866, the chuck being as much hollow in the one case as it is rounding in the other, and that shown in Fig. 866 will stand out of true to an amount greater than the chuck is in an equal amount of its radius. While that shown in Fig. 865 would be nearer true than the chuck is in an equal length of its radius, both amounts being in proportion to the length of the line A to that of line B.

If the chuck plate is known to be either rounding or hollow, pieces of paper of sufficient thickness to remedy the error may be placed at C and D respectively. It is better, however, to true up the faces of plates so that the surface of the work bolted against

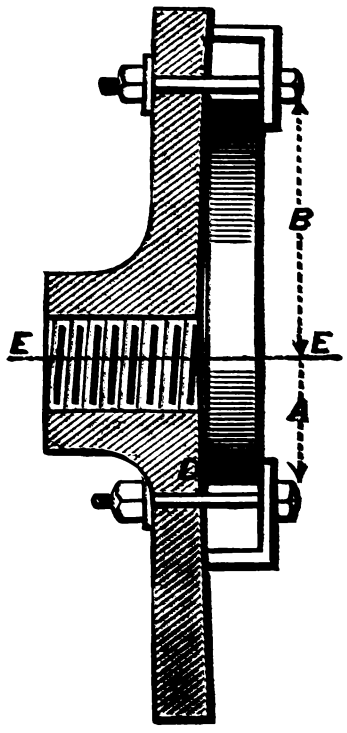

Fig. 865.

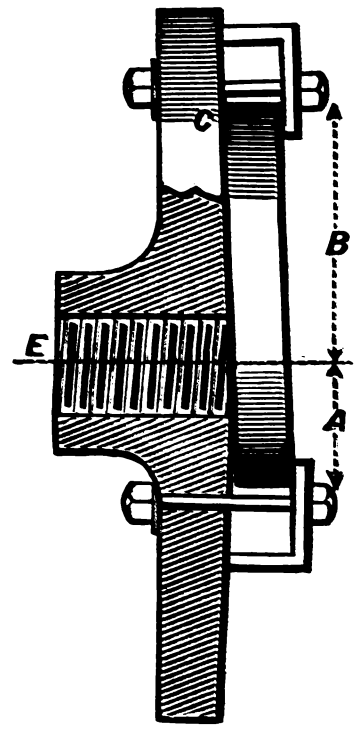

Fig. 866.

it will be true and stand at a right angle to the line of lathe centres.

In truing up a face plate, the bearings of the live spindle should be adjusted so that there is no play on them, and the screw or other device used to prevent end motion to the live spindle should be properly adjusted.

A bar or rod of iron should also be placed between the lathe centres to further steady the live spindle, and the square holes or radial slots should have the edges rounded or bevelled off, as shown in Fig. 867, so that when the tool point strikes the sides A of the holes or slots it will leave its cut gradually and not with a

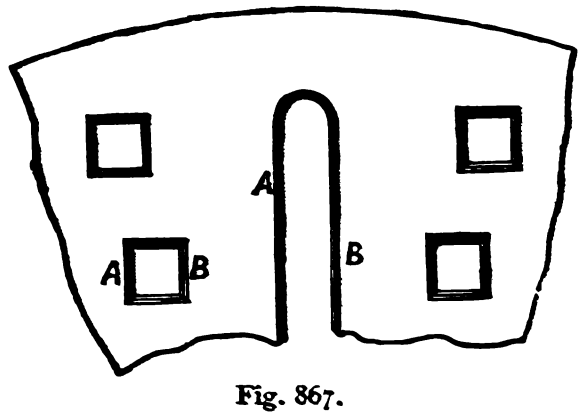

Fig. 867.

sudden jerk or jump, while, when it again takes its cut on the side B, it will also meet it gradually and will not meet the sand or hard skin on the face of the casting, which would rapidly dull the tool.

In facing or truing up a chuck plate, the feed nut should be put in gear with the feed screw or feed spindle, and the cut should be put on by revolving the feed spindle or feed screw. This will take up any lost motion in the feeding mechanism, after which the carriage may, if there are devices for the purpose, be locked to the lathe bed so as to prevent its moving.

It is better that the thread of the chuck be not too tight a fit upon that on the lathe spindle, the radial face of the chuck hub and of the cone spindle collar being relied upon to set the chuck true, because it is somewhat difficult to produce threads so true as to hold the faces true.

To preserve the threads both upon the chuck bore and the lathe spindle from undue wear, the chuck when taken off the lathe should be stood on edge so that falling dust may not accumulate in the thread. Before putting the chuck upon the lathe spindle the threads of both and the radial faces of the chuck hub and cone spindle collar should be carefully cleaned, because the presence of any dirt or dust on those faces will throw the face of the chuck plate out of true to an amount that may be of importance at and near the chuck's circumference.

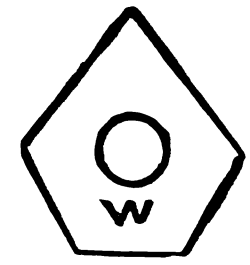

Fig. 868.

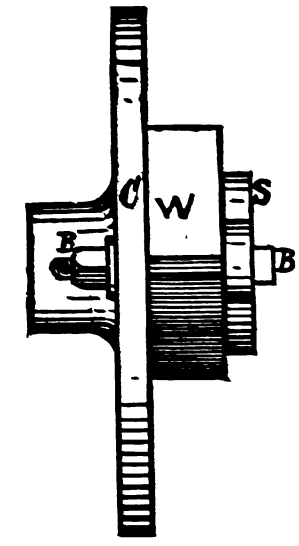

Fig. 869.

As an example of simple chucking on a face plate, or chuck plate, let it be required to bore, cut a thread in the bore, and recess the piece of work shown in Fig. 868, the radial faces being already true planes not requiring to be turned.

This could be held as shown in Fig. 869, in which C is the chuck plate, W the work, S a strap plate, and B, B are bolts and nuts, a face view of the work already chucked being shown in Fig. 870. The surface of the work being bolted direct against the

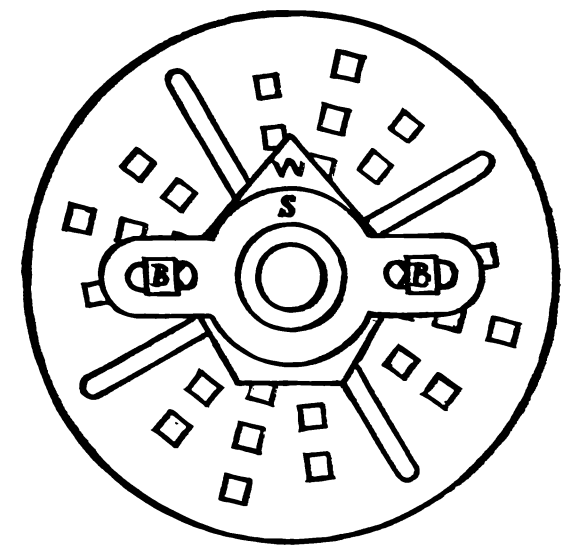

Fig. 870.

face of the chuck plate will be held true to that face, and all that is necessary is to set it true concentrically. While performing this setting, the work should not be bolted too firmly, but just firm enough to permit of its being moved on the chuck plate by light blows, the final tightening of the clamps being effected after the work is set true. The bolts should be tightened upon the work equally, otherwise one end of the plate will grip the work firmly, while the other being comparatively slack, the work will be apt to move under the pressure of a heavy cut.

A form of strap not unusually employed for work chucked in this manner is shown in Fig. 871, its advantage being that it is capable of more adjustment about the chuck plate, because the slots afford a greater range for the bolts to come even with the holes in the chuck plate.

If the work be light, it may be held to the face plate while the holding or clamping plates are applied as shown in Fig. 872, in

which F is the face plate or chuck plate, W the work, P a plate of iron, D a rod, and C the back lathe centre. The latter is forced out by the hand wheel of the tailstock with sufficient force to hold the work by friction while the bolts and plates are applied. It is obvious, however, that if the work has no hole in its centre, the plate P may be dispensed with, and that if a strap plate, such as shown in Fig. 871, be employed, it must first be hung on the tail

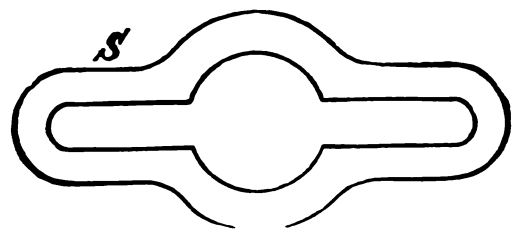

Fig. 871.

spindle so that it may be passed over the rod D to the work. Strap plates are suitable for work not exceeding about 6 inches in diameter. For larger work, bolts and plates are used, as shown, for example, in Fig. 873, which represents a piece of work W held to the chuck plate by plates P and bolts B, there being at E E packing pieces or pieces of iron to support those ends of the clamps or clamping plates P. It is necessary that these packing

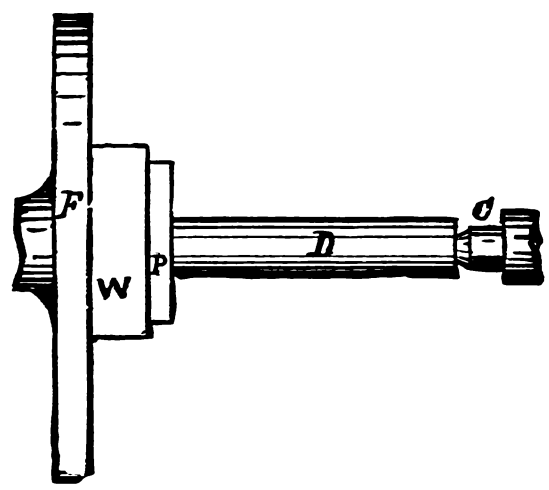

Fig. 872.

pieces E be of such a height as to cause the plates P to stand parallel to the face of the chuck for the following reasons :—

Suppose that in Fig. 874, W is a piece of work clamped to the chuck plate, and that packing piece E is too high, and packing piece E′ is too low, as shown, both pieces throwing the plates P out of level, then in setting the hole in the work to run true it will be found difficult to move it in the direction of the arrow, because

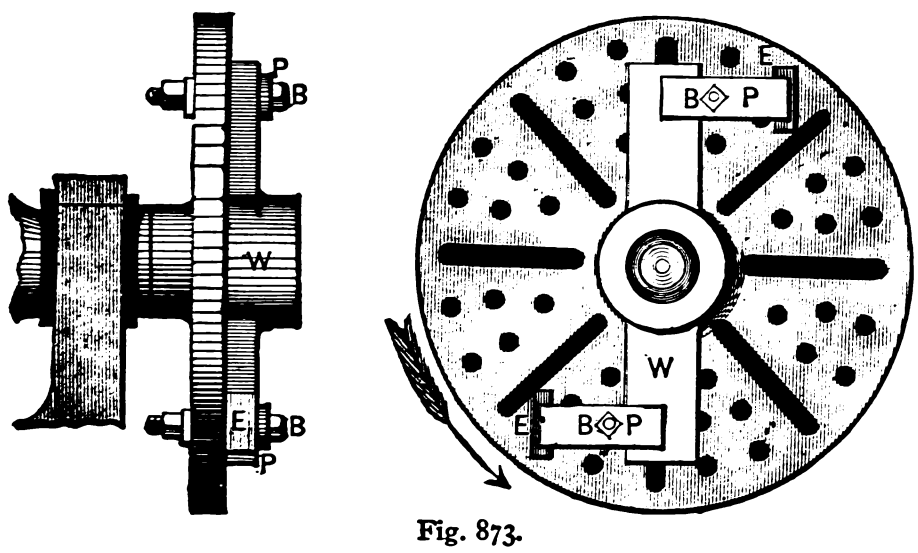

Fig. 873.

moving it in that direction acts to force it farther under plate P′, and therefore to tighten its nut. In the case of plate P, the packing piece E will be gripped by the plate more firmly than the work is, which will be held too loosely, receiving so little of the plate pressure as to be liable to move under the pressure of the tool cut. It is better, however, that the packing piece be slightly above, rather than below the level of the work surface. The position of the plates with relation to the work should be such as to drive rather than to pull it, which is accomplished in narrow work by placing them as in Fig. 873.

The position of the bolts should be as close as possible or convenient to the work, because in that case a larger proportion of its pressure falls upon the work than upon the packing piece. For the same reason, the packing piece should be placed at the end of the plates. This explains one reason why it is preferable that the packing piece be slightly above rather than below the level of the work surface, because, the bolt being nearer to the work than to the packing piece, will offset in its increased pressure on the work the tendency of the packing piece to take the most bolt pressure on account of standing the highest.

If a packing piece of the necessary height be not at hand, two

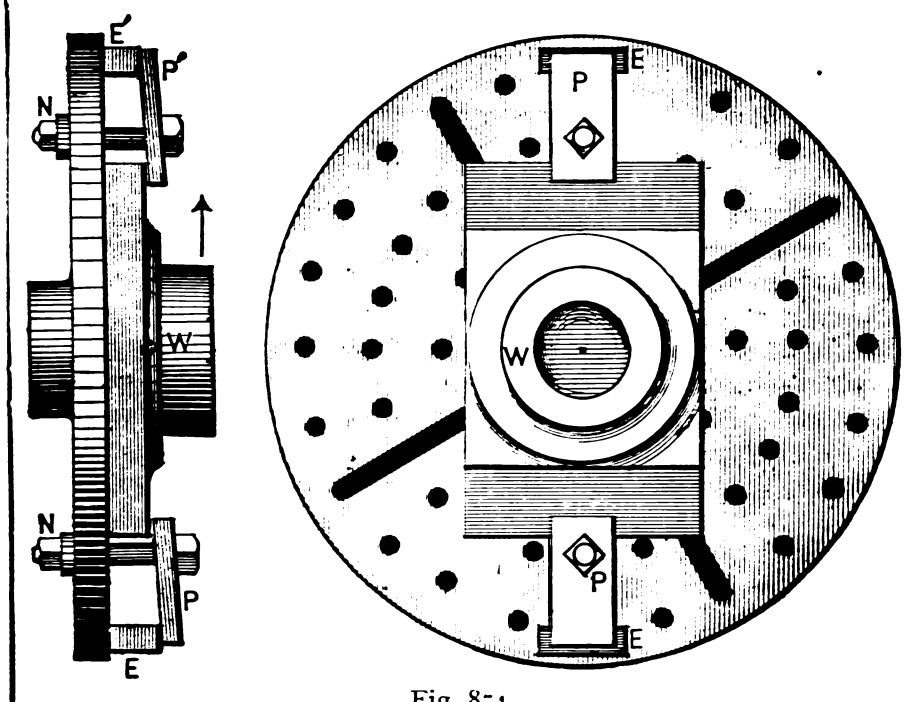

Fig. 874.

or more pieces may be used, one being placed upon the other. Another plan is to bend the end of the clamping plate around, as in Fig. 875, in which case a less number of packing pieces will be required, or, in case the part bent around is of the right length or height, packing pieces may be dispensed with altogether. This is desirable because it is somewhat difficult to hold simultaneously the plate in its proper position and the packing pieces in place while the nut is screwed up, there being too many operations for the operator's two hands. To facilitate this handling, the nuts upon the bolts should not be a tight fit, because, in that case, the bolt will turn around in the bolt holes or slot of the chuck, requiring a wrench to hold the head of the bolt while the nut is screwed up, which, with holding the plate, would be more than one operator could perform. If the holes in the chuck plate are square, as

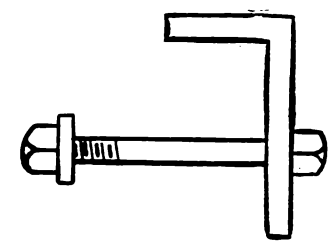

Fig. 875.

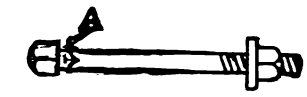

Fig. 876.

they should be, the bolt may be made square under the head, as in Fig. 876 at A, which will prevent it from turning in the hole. This, however, necessitates that the head of the bolt be placed at the back of the chuck, the nut end of the bolt being on the work side, which is permissible providing that the bolt is not too long, for in that case the end of the bolt projecting beyond the nut would prevent the slide rest from traversing close up to the work, which would necessitate that the cutting tools stand farther out from the slide rest, which is always undesirable. Bolts that are not square under the head should, therefore, be placed with the head in the work side of the chuck plate, because it is of little consequence if the bolt ends project beyond the nuts at the back of the chuck plate.

The heads of the bolts should be of larger diameter than the

nuts, because the increased area under the head will tend to prevent the bolt from turning when the nut is screwed up.

It sometimes happens that a projection on the work prevents the surface that should go against the surface of the chuck plate from meeting the latter. In this case, what are known as parallel pieces are employed. These are pieces of metal, such as shown in Fig. 877, the thickness A varying from the width B so as to be suitable for work requiring to stand at different distances from the chuck plate surface, it being always desirable to have the work held as near as possible to the chuck plate so that it may not overhang the live spindle bearings any more than necessary.

An example of chucking with bolts and plates and with parallel pieces is given in Fig. 878, in which the work has projections *a*,*a* and *b*,*b*, which prevent it going against the face of the chuck; E,E

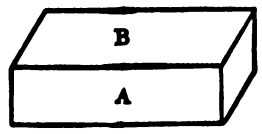

Fig. 877.

are the parallel pieces which, being of equal thickness, hold the inside face of the work parallel to the chuck face.

Another example of the employment of parallel pieces is shown in Fig. 879, which represents a connecting rod strap with its brasses in place, and chucked to be bored. B is a small block of iron inserted so that the key may bind the brasses in the strap and P P is one parallel piece, the other being hidden beneath the key and gib. The object in this case is to chuck the brasses true with the face A of the strap, the plates S being placed directly above or over the parallel pieces. This is a point requiring the strictest attention, for otherwise the pressure of the clamping plates will bend both the work and the chuck plate.

In Fig. 880, for example, the parallel pieces being placed at *p*,*p*, and the clamping plates at P,P, the pressure of the latter will

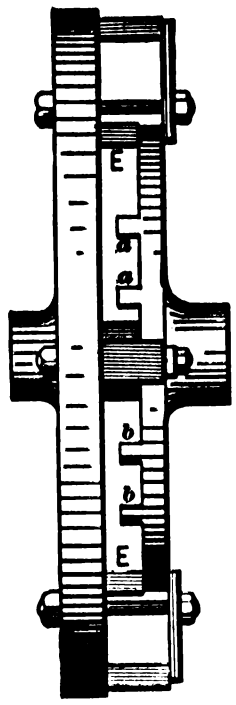

Fig. 878.

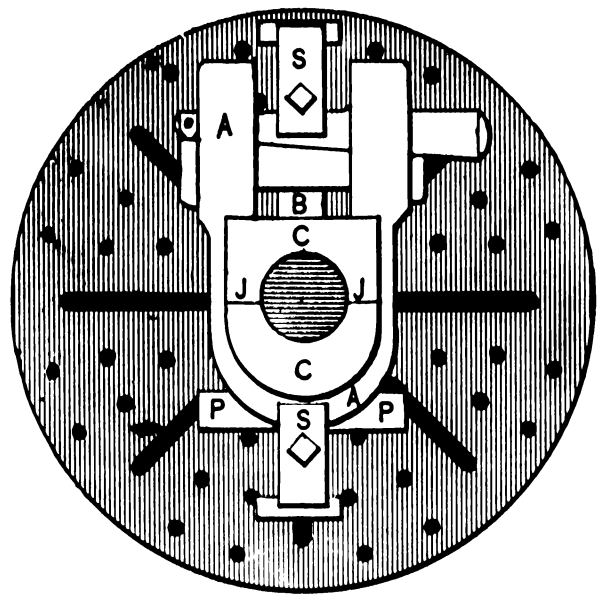

Fig. 879.

bend the work as denoted by the dotted lines, and the chuck plate in the opposite direction, and in this case the work being weaker than the chuck plate will bend the most.

As a result the face of the work will not be true when released from the pressure of the bolts and nuts holding it. Parallel pieces should therefore always be placed directly beneath the clamping plates, especially in the case of light work, because if they be but an inch away the work will be bent, or spring as it is termed, from the holding plate pressure. In very large work the want of truth thus induced would be practically discernible, even though the work be quite thick, as, say, three inches, if the parallel pieces were as much as, say, 6 inches from the holding plates.

Fig. 881 shows an example of chucking by means of parallel strips in conjunction with parallel pieces. B, B are a pair of brasses clamped by the strips S, S, which are bolted together by the bolts A,A; P,P are the parallel pieces.

The strips being thus held parallel to the surface of the chuck plate, all that is necessary is to set the flanges of the work fair against the surface of the strips and true with the dotted circle, and the brass bore will be bored at a true right angle to the inside face of the flange. If the inside face of the brasses was true, the parallel pieces might be omitted, but this is rarely the case.

An excellent example of bolt and plate chucking is given in a

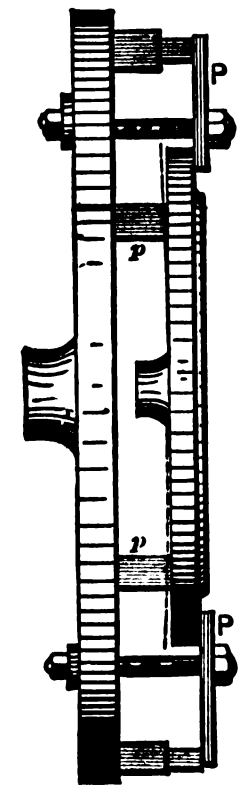

Fig. 880.

heavy ring of, say, three feet diameter, and 5 or 6 inches cross section, requiring to be turned quite true, and of equal thickness all over. This job may be chucked in three different ways; for example, in Fig. 882, A,B,C,D are four-chucking dogs, so holding the work that its two radial faces and outside diameter may be turned. This being done, four more dogs may be placed to grip the diameter of the work, and the inside ones may then be removed and the bore turned out. In this way the work would not be unchucked until finished. There is danger, however, that the

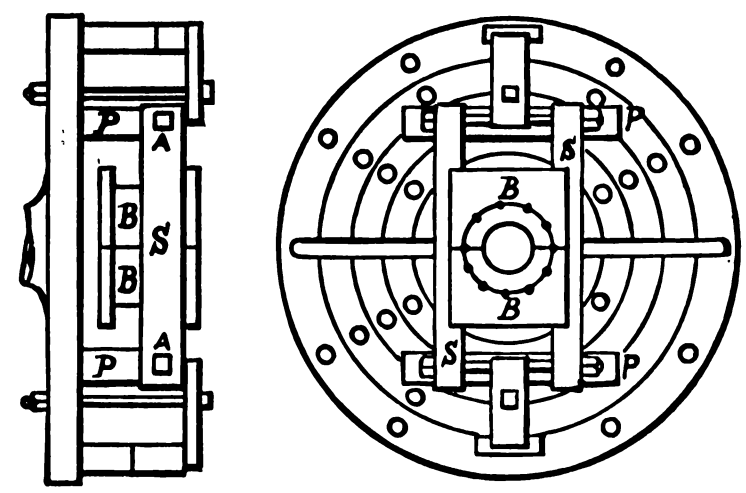

Fig. 881.

dogs applied outside may spring the work out of true, in which case it would require setting by a pointer in the slide rest.

Another plan would be to hold the work by dogs applied on the outside, and turn the bore and both of the faces. To these fasten four plates on the chuck plate, and turn their ends to the size of the bore and place the work on them, as in Fig. 883, in which A, B, C, D are the four plates, and are clamping plates. This plan is often employed, but it is not a desirable one in heavy work, because the weight of the work is quite apt to move the plates during its setting. A better plan than either of these is to

first turn off one face and then turn the work around in the lathe and hold it as in Fig. 884. The bore may then be turned, and all that part of the face not covered by the plates. Four holding plates must then be applied with the bolts within the bore, and when screwed firmly down the outside plates may be removed, leaving the work free to have the remainder of its face and its circumference turned up. In this way the work may be turned more true than by either of the two previously described methods, because it has no opportunity to move or become out of true.

Cylindrical work to be chucked with its axis parallel to the face plate is chucked by wood workers as shown in Fig. 885, in which

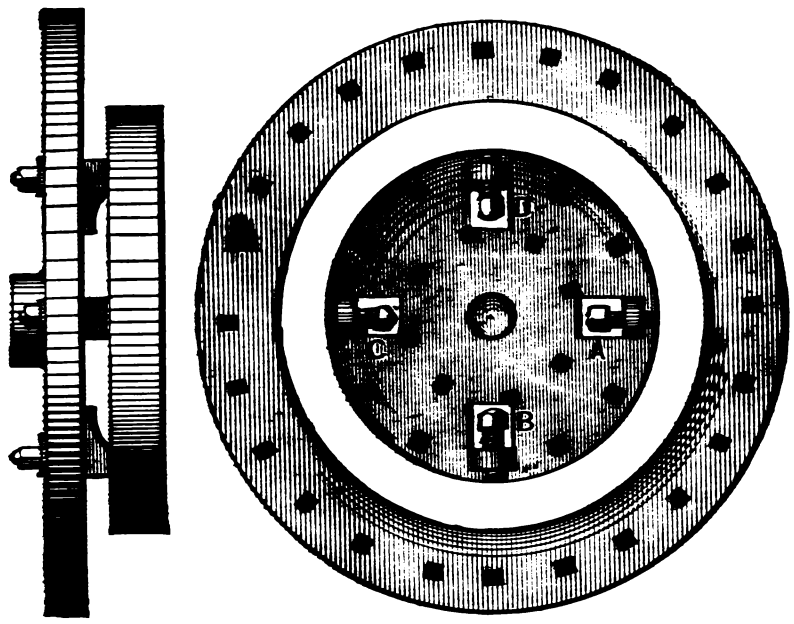

Fig. 882.

B,B are two blocks screwed to the chuck C, and having Vs in to receive the work as shown; the work is held to the blocks B, by means of the straps S,S, which are held to B,B by screws.

An example of a different class of chucking by bolts and clamps may be given in the engine crank. A common method of chucking such a crank is to level the surface of the crank in a planing machine, and to hold that surface to the chuck-plate by bolts and plates, while boring both the holes, merely reversing the crank end for end for the second chucking.

This method has several inherent defects, especially in the case of large cranks. First, it is a difficult matter to maintain large

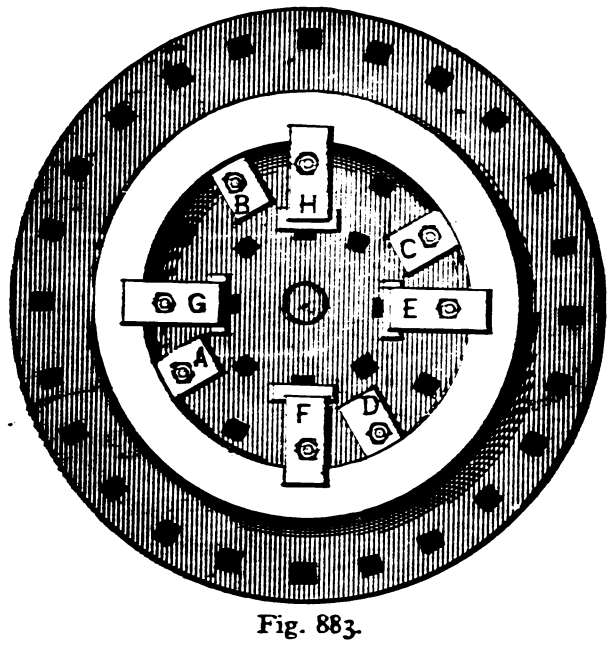

Fig. 883.

chuck plates quite true, and as a result by this method of chucking any want of truth in the surface of the chuck will be doubled in the want of parallelism in the bores of the crank.

Suppose, for example, that the chuck surface is either slightly hollow or rounding as tested with a straight-edge placed across its face, then the axial line of the hole bored in the crank will not be at a true right angle with the planed surface of the crank. When the crank is turned end for end on the chuck-plate and again bolted with its plain surface against the surface of the chuck, the second hole bored will again not stand at a true right angle to the planed surface, and furthermore the error in one hole will be in a directly opposite direction to that of the other hole, so that the error in the crank will be double the amount that it is on the chuck surface. To this it may be answered that if such an error is known to exist it may be corrected by placing a piece of

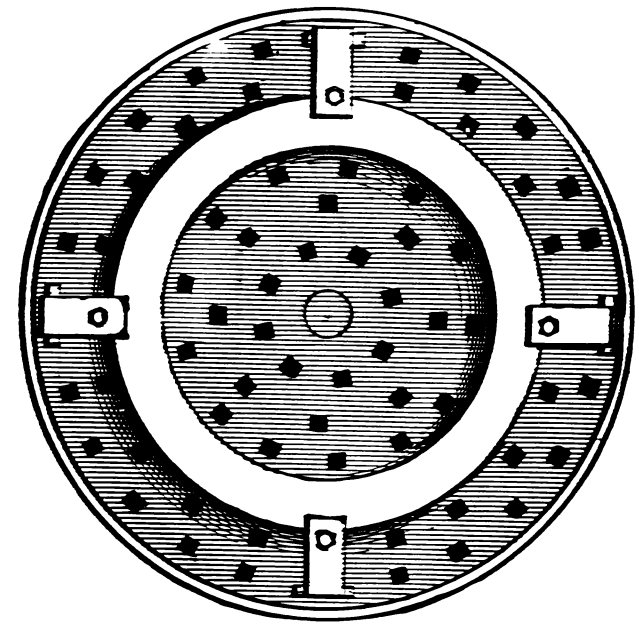

Fig. 884.

paper of the requisite thickness at the necessary end of the crank for both chuckings. But this necessitates testing the chuck on each occasion of using it, and the selection of a sheet of paper of the exact proper thickness, which is labor thrown away so long as an equally easy and more true way of chucking can be found. Furthermore there is a second and more important element than want of truth in the chuck to be found, which is that of the alteration of form which occurs in the crank (as each part of its surface is cut away) as explained in the remarks with which the subject of chucking is prefaced.

First, the planed surface of the crank will alter in truth so soon as the crank is released from the pressure of the holding devices on the planer or planing machine; second, that surface will again alter in form and truth from the removal of the metal around the surface of the hole first bored; and third, the planed surface will be *to some extent* sprung from the pressure of the plates holding the crank to the chuck plate, hence the following method is far preferable.

If it is intended to plane the back surface of the crank let that be done first as before, and let it be held to the face-plate by bolts and plates as before, while the hole and its radial face at

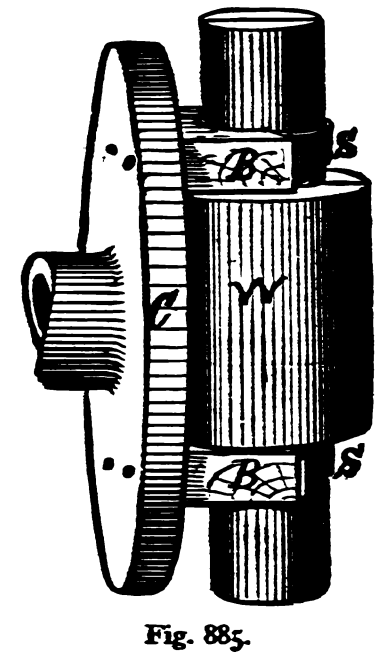

Fig. 885.

the large end of the crank are turned and finished. In doing this, however, first rough out the radial face, and then rough out the hole, so that if the work alters in form a fine finishing cut on both the radial face and the bore will correct the evil. Then release the crank from the pressure of the holding plates; and it

is obvious that however the planed surface may have altered in truth from removing the surface metal, the radial face just turned will be true with the bore turned at the same chucking. Now to chuck the crank to bore the second hole, turn it end for end as in Fig. 886, and bolt the face already turned to the chuck plate (as at A in the figure) with one or more bolts and strap plates. To steady the other end of the crank, and prevent it from moving under the pressure of the cut, take two bolts and plates B, and

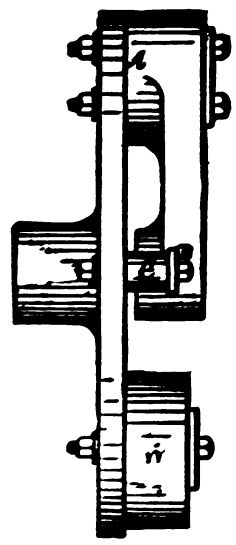

Fig. 886.

place a washer between them and the chuck surface as shown at C, then bolt the plates to the chuck plate, so adjusting them that their ends just have contact with the crank when it is set true. In setting it true it may be moved by striking the outer ends of the plates.

In this method of chucking, we have the following advantages:—

1st. If the chuck plate is not true we may place a piece of paper beneath the crank surface A, to correct the error as in the former method, or if this is neglected, the second hole bored will be out of true to an amount answerable to the want of truth in the chuck, and not to twice as much as in the former method.

2nd. Any alteration of form that may take place during the first chucking does not affect the truth of the second chucking as in the other case.

3rd. The crank being suspended during the second chucking, any alteration of form that may accompany the boring of the second hole will be corrected by the finishing cut, hence the crank will be bored with its two holes as axially true as they can be produced in the lathe.

It now remains to explain the uses of the pieces W in Fig. 886, simply weights termed counterbalances bolted to the chuck plate to balance it against the overhanging weight of the crank on one side of the chuck plate. If these weights are omitted the holes in the work will be bored oval, because the centrifugal force generated by the revolution of the work will take up any lost motion there may be between the cone spindle journal and its bearings, or if there be no such lost motion the centrifugal force will in many cases be sufficient to spring the cone spindle.

In selecting these weights it is well to have them as nearly as possible heavy enough to counterbalance the work when placed at the same distance from the lathe centre as the outer end of the work. The proper adjustment of the weight is ascertained by revolving the lathe and letting it slowly come to rest, when, if the outer end, or overhanging end as it termed, of the work comes to rest at the bottom of the circle of revolution on two or three successive trials the weight of the counterbalance must be increased by the addition of another weight, or the weight may be moved farther from the lathe centre.

To enable a piece of work, such as a crank for example, to have two or more holes bored at one chucking, a class of chuck such as shown in Fig. 887 is sometimes employed. S is a slide in one piece with the hub that screws on the live spindle and standing at a true right angle with the axial line of the cone spindle and made as long as will swing over the lathe bed. It contains a dovetail groove (as shown in the edge view) into which a bar *t*, running across the back of the face plate P, passes. To cause the bar *t* to accurately fit the dovetail, notwithstanding any wear of the surfaces, a slip G is introduced, being set up to *t* by set-screws passing through that side of the dovetailed piece. The work, as the crank C, is bolted to the face plate, and the set-screws on G are eased so that the plate can be moved to set the work true; when true, the set-screws are tightened, and the first hole may be bored. To bore the second hole all that is necessary is to slacken the set-screws on G, move the plate, which will slide in the dovetail groove, and set the work; when the set-screws are again set up tight, the boring may again be proceeded with. In this way both holes may be bored without unclamping the work. The whole truth of the job, *before being unclamped from the chuck plate*, depends in this case upon the dovetail groove being at a true right angle to the axial line of the lathe cone spindle, it being of no consequence whether the face plate stands true or not. But suppose the removal of the metal to have released strains in the casting or forging, then the clamping plates will have prevented the crank from quite assuming its normal shape after the release of those strains, and the crank, when finished, though true while clamped, will change its form the instant the clamping plates are removed, and the holes bored will in all probability not have their axial lines true one with the other. Another objection is that throwing the chuck plate out of balance on the lathe spindle as well as the crank induces the evils due to the centrifugal motion. This may be offset by increased counterbalancing, of course, but the counterbalancing becomes cumbersome, and is not so easy a matter. For these reasons, chucks of this class are not desirable unless it may be for comparatively small and light work. It is obvious that the dovetail groove may be provided with a screw, and the back of the plate with a nut, so as to move the plate along the groove by revolving the screw. This will assist in adjusting or setting the work, but it will increase the amount of weight requiring to be counterbalanced.

When a number of pieces are to be bored with their holes of equal diameters and of the same distance apart, the chucking should be performed as in Figs. 888 and 889; one and the same end of each link should be bored and faced, the links being held by the stem, placed on parallel pieces with plates. A pin such as shown in Fig. 889 should then be provided, its diameter across A being a close sliding fit into the bores of the links; while the length of A should be slightly less than the length of the hole in the link, the part D should be made to accurately fit the hole

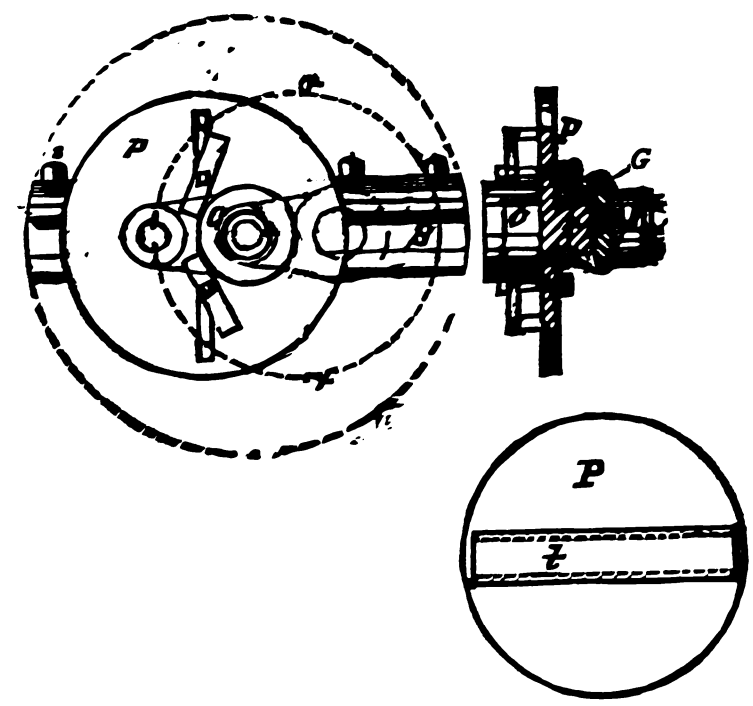

Fig. 887.

bored by any suitably sized reamer; a washer B should be provided, and each end should be threaded to receive nuts. There should then be provided in the chuck plate a hole whose distance from the centre of the chuck must exactly equal the distance apart the holes in the links are required to be, and into whose bore the end D of the pin shown in Fig. 889 must drive easily. The pin should be locked in this hole by a nut as shown in Fig. 889. The bored ends of the links may then be placed on the pin and

fastened by a nut as in Fig. 888, which will regulate the distance apart of the holes.

It is obvious that the pin may be passed through one of the radial slots in the chuck, and set the required distance from the centre, but in this case the pin would be liable to become moved in its position in the slot.

Side plates to prevent the link from moving should of course be applied as at D, D in the figure.

The whole process of the second chucking will thus consist of fastening the links on the pin, and setting the free end to the circle made to mark its location. This is done as shown in Fig. 890, which represents the free end of a link, D is the circle marked to set the link by, and P a pointed tool held firmly in the slide rest

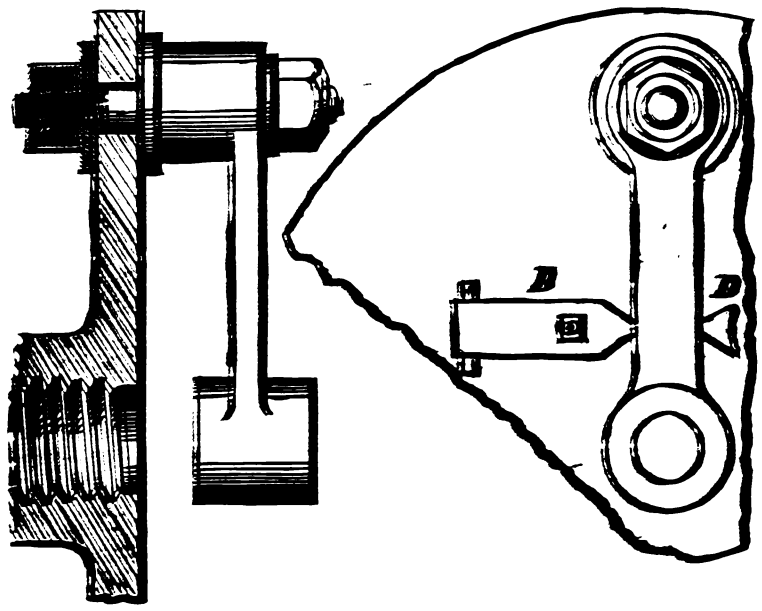

Fig. 888.

tool post. The link is obviously set true when the dotted circle on its end face runs true, the pointer merely serving to test the dotted circle.

When, however, one or two links only require to be turned it will not pay to make the pins shown in Fig. 888, especially if the holes of the different links vary in diameter, hence the work must be set by lines.

In the promiscuous practice of the general workshop, where it may and often does happen that two pieces of work are rarely of the same shape and size, lines whereby to set the work are an absolute necessity, not only to set the work by in chucking it, but also to denote the quantity of metal requiring to be taken off one face in order to bring its distance correct with relation to other

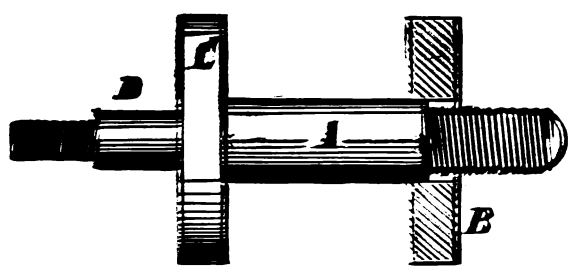

Fig. 889.

faces. An example of this kind is given in Fig. 891, which represents a lever to be bored and faced at the two ends, the radial faces standing at different distances from the centre of the lever stem as denoted by the lines (defined by centre punch dots) E, F, G, H, I, J, K, L. It will be noted that at H, I, F, and E there is but little metal to be taken off, while there is ample at L. Suppose then that the face L were the first one turned, and it was only just trued up, then when F or H were turned there would be no metal to turn, for they may be too near the plane of L already.

The necessity for these lines now being shown, we may proceed to show how they should be located and their services in setting the work. The line A is called the centre line, it passing through the centre of the thickness of the link body on both edges of the link. From it all the other lines, as J, F, I, G, E, K, and H, I, are marked.

The first question that arises in the chucking is, which of the holes B, C, or D, shall be bored first. Now the faces K and L are those that project farthest from the centre line A, hence if the hole at that end be bored and the faces K, L, be turned first, we may bolt those faces against the chuck plate, and thus insure that all three holes shall stand axially true one with the other. If the holes B or C were bored first, L projecting beyond J and F (which are the faces of holes B, C) would prevent the radial face first

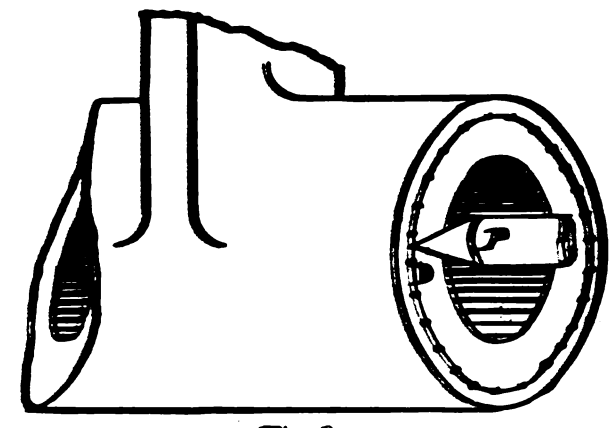

Fig. 890.

turned from serving as a guide in the subsequent chuckings, unless a parallel piece were placed between the face and the chuck. In this case, however, there is not only the extra trouble of using the parallel piece, but there would obviously be more liability of error, as from the parallel piece not being dead true and the amount of the error multiplying in the length of the lever, and so on.

The hole D is the one, therefore, to be bored first, the chucking proceeding as follows:—Two parallel pieces of sufficient thickness to keep L clear of the chuck plate should be placed one on each side of the hub E, and bolts and plates placed directly over them.

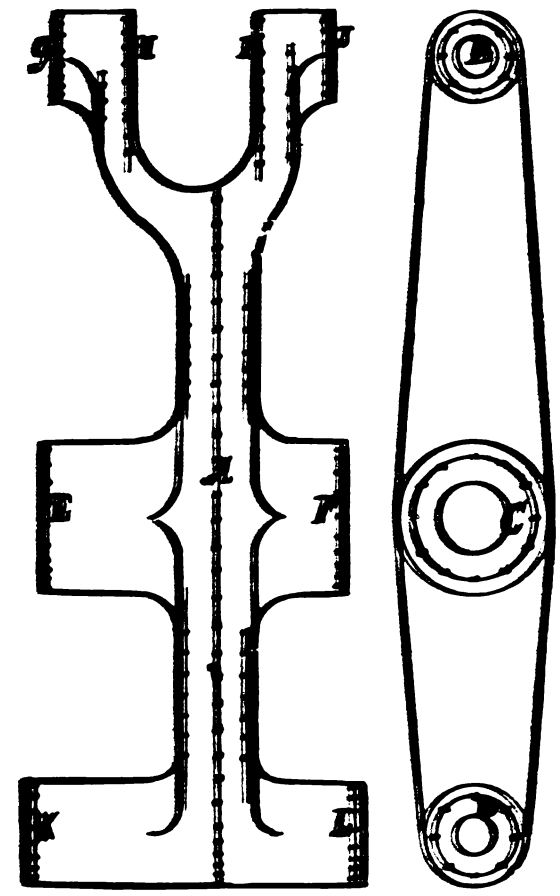

Fig. 891.

The work must be set so that the line A on each side of the link stands exactly parallel with the face of the chuck, the parallelism being tried at each end of the line, because any error that may be made in setting the work by the full length of the line will have a less effect upon the work than the same amount of error in a shorter length of line. For this reason the centre line should always be marked as long as possible and used to set by, unless there is a longer line running parallel to it and marked on both sides of the link, as would be the case if the dotted line at J and

that at L were equidistant from A, in which event they may preferably be used.

The work is set true to the lines by a scribing block, or surface gauge, but as that instrument is more used in setting work with chuck dogs its application will be shown in connection with chucking by dogs; hence to proceed: To set the work true to the line A it may be necessary to place a thickness of paper, a piece of sheet tin, or the equivalent, beneath one of the parallel pieces to bring A parallel with the chuck plate surface. This being

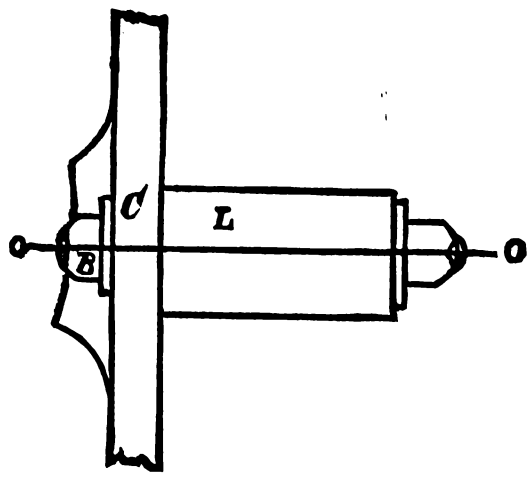

Fig. 892.

done, however, and the circle D being set to run true, the hole may be bored and the radial face L turned off so as to just split the dotted line at L, and this radial face may be used instead of the line A for all subsequent chuckings, so as to avoid the errors that might occur in referring to the line, and from the alterations that might occur in the form of the work from removing the surface metal.

Fig. 892 represents a view of the end L as held for the second chucking. C is a section of the chuck plate, and O O represents

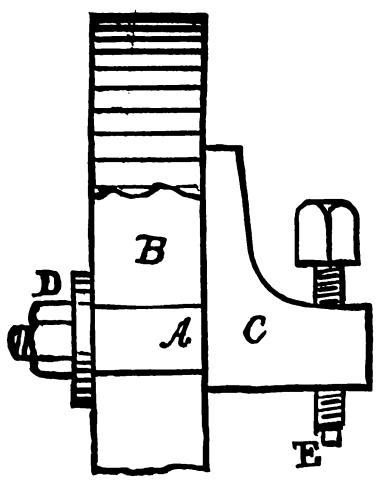

Fig. 893.

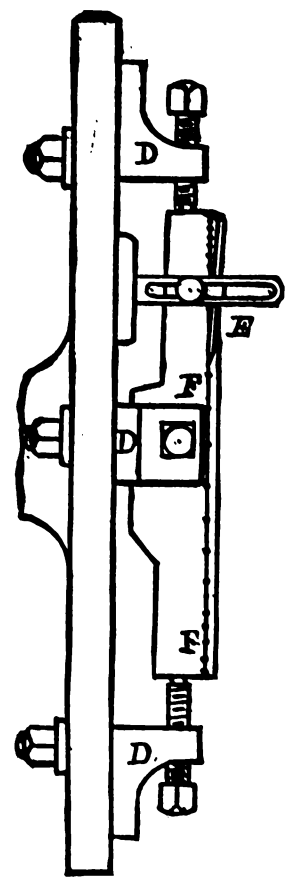

Fig. 894.

the line of centres of the lathe, and it is obvious that the radial face of the lever end (which is here represented by L) being used for all but the first chucking, the holes will all stand axially true one with the other, no matter how many chuckings and holes there may be, hence it becomes obvious that the face that will meet the chuck plate is the one that should be turned at the first chucking. It is of no consequence in the case of a single lever whether the pin fits the hole in the end of L, Fig. 892, or not, because the dotted circles at B, C, D in Fig. 891 form the guides whereby to set the holes for distance apart, and any bolt may be used to clamp the work.

It is usual in an example of this kind to turn the stem of the lever to its proper thickness for a short distance from the hubs, so as to have the stem true with the bores, and form a guide whereby to set the lever in the planer or shaper when cutting down the lever stem to size. The rules of chucking and the balance weighting described with reference to chucking a crank, of course also apply to this example.

It will now be observed that in all cases in which work is chucked by bolts and plates, the whole of the faces cannot be turned at one chucking unless the shape of the work is such that it will permit the plates and the bolts to pass or be below the level of the work surface. It will further be noticed that if one face of the work is held against the chuck surface it cannot be turned at the same chucking that the other face is turned at. Now it may be very desirable that a part or the whole of the back face as well as the front one be turned at the same chucking as that at which the hole is bored, so as to have the hole and those two faces true without incurring the errors that might arise from a second chucking. Again, the diameter of the work may be equal to that of the chuck so as to preclude the possibility of using bolts and plates outside of the circumference, and though there be cavities or slots running through the work through which the bolts might be passed, yet the presence of the plates would prevent the face from being turned.

To meet these and many other requirements that might be named, chucking by the aid of chucking dogs is resorted to, one

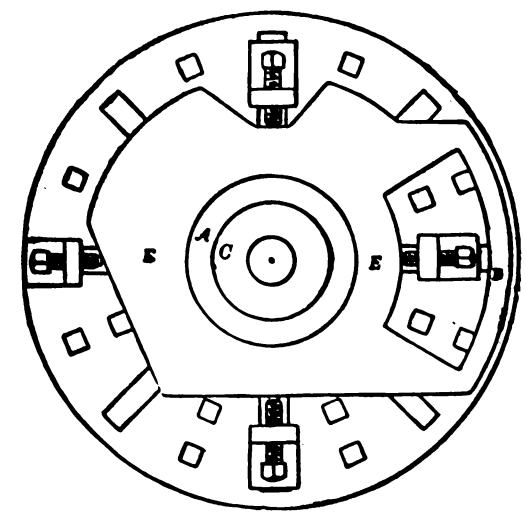

Fig. 895.

of these dogs being shown in Fig. 893. B represents a section of the chuck plate with a piece broken out to show the stem A of the dog, which is squared to prevent its revolving when the nut D, which holds the dog to the chuck plate, is tightened, the holes of the chuck, of course, being square also; E is the set-screw which holds the work, its end at E being turned down below the thread, and the head squared to receive a wrench.

Fig. 894 represents an example of chucking by dogs, it being required to face the work off to the dotted line F F. Three of the four dogs used are shown at D, D, D. To set the work the scribing block shown in the figure is employed, the point of the needle being set to the line at any one spot, and the scribing block or surface gauge carried around the work rested with its base against the chuck plate and the needle point tried for coincidence with the line at various points in the work's circumference. The work is not at first held too firmly by the dogs, so that light blows will suffice to so move the work that the surface gauge needle point applied as shown and at any point around the work will coincide with the line. It will here be observed that using the dogs obviates the necessity for parallel pieces, when the work has projections at the back face as shown in the cut.

Fig. 895 represents another example in chucking by dogs. It is required to surface the whole of the surfaces shown, to bore the hole C and to face a face similar to A, but on the other side or chuck side of the work. Then the work is placed so that its outer face will project beyond the extreme surface of the dogs, and the whole of the operations can be performed at one chucking. It

will be observed that in this case the surface of the chuck plate does not automatically serve to guide the work in the chucking, because there is no contact between the two, but the chuck surface can be used as a guide whereby to chuck the work as has just been shown. Or suppose the work to require to be set as true as can be to its exposed face, then the work end of the surface gauge is applied as shown in Fig. 896 at E.

The surface gauge may indeed be dispensed with if the work is sufficiently light that the lathe can be swung around by pulling the chuck plate with the hand, and the work merely requires to be set to run true on its exposed radial face. A pointer held in the slide rest, and applied as in Fig. 890, will denote the setting of the work, which must be tapped until the pointer touches it equally on four equidistant points of the surface; but if it is essential to take as little as possible off the face while truing it up, the tool point should be held stationary, while the work should be so set that the four most distant points (in that circle on the work which is equivalent in radius to the radius to which the tool point stands from the chuck centre) are equidistant as measured by a rule from the tool point. The philosophy of this will be understood from a reference to Fig. 894 and the remarks thereon, this being a

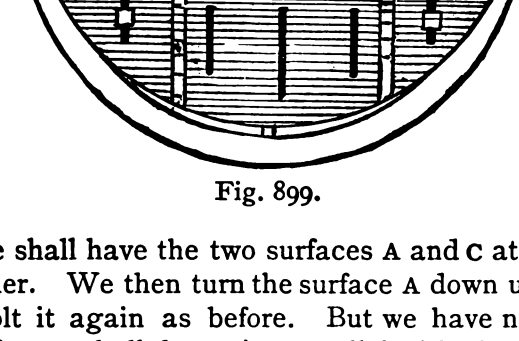

Fig. 897.

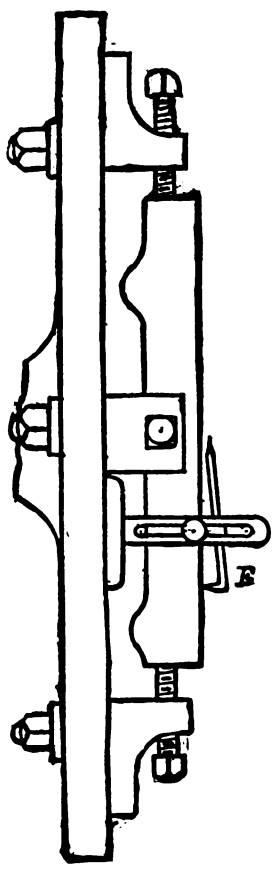

Fig. 896.

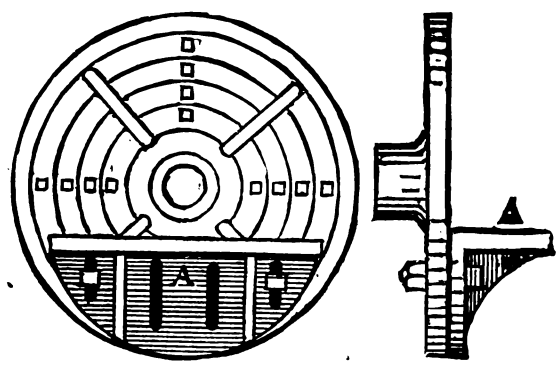

Fig. 898.

parallel case, but applied to a radial face instead of to a circumference.

Now suppose we have the piece of work shown in Fig. 897, which requires to have its surfaces A and B parallel and at a right angle to C and D, the end faces E and F parallel to each other, and at a right angle to both A, B, C, and D, the hole at G is to be axially true with the surfaces A, B, C, and D, as well as with the pin at I, and the hole at H at a dead right angle to that at G.

We may put a plug in G and turn up the surfaces E and F, and turn the pin I; this, however, would leave the hole G unbored, whereas it should be bored when the surface E is turned; again, after these surfaces are turned they are of no advantage as guides in the subsequent chuckings.

We may grip the surfaces E and F in a jaw chuck to turn the surfaces A, B, C and D, but depending upon the face jaws of the dogs to set the work surface true by; but this would not be apt to produce true work on account of the spring of the jaws, as explained in the remarks upon jaw chucks; furthermore, the work, supposing it to be a foot long, could not be held in a dog chuck sufficiently firmly to enable the turning of the end face E or the pin I, and this brings us to that most excellent adjunct to a general chucking lathe, the angle plate shown in Fig. 898.

It is simply a plate of the form shown in the figure, having two flat and true surfaces, one at a right angle to the other; one of these surfaces bolts to the chuck plate, while the other is to fasten the work on. The slots shown are to pass the bolts through to fasten the angle plate to the chuck plate, and the work surface of the plate contains similar slots and holes to receive the bolts used to fasten the work.

Suppose, then, we fasten the piece of work to the angle plate as shown in Fig. 899, and face off the surface C, and bore the hole H, the work being set true with its surface, or to a line, by the aid of a surface gauge, as may be required. We then turn surface C down to meet the surface of the angle plate, fasten it to the same with bolts and plates and setting it as before, and on turning its

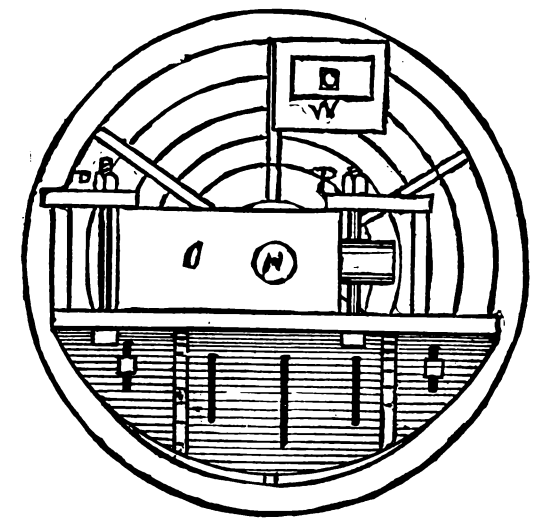

Fig. 899.

surface A we shall have the two surfaces A and C at a right angle to one another. We then turn the surface A down upon the angle plate and bolt it again as before. But we have now to set it so that the surface C shall be quite parallel with the surface of the chuck plate. This we may do by placing one or more parallel strips behind it, as at S S, in the plan view, Fig. 900, setting the work so that it binds the parallel strips tight against the chuck plate along their full lengths; or we may measure the distance of C from the chuck plate surface with a pair of inside calipers; or we may turn the bent end of a surface-gauge needle outwards and gauge the work as shown in the plan view, trying the work

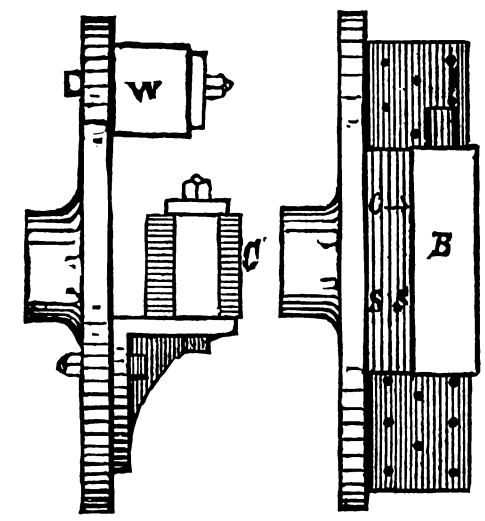

Fig. 900.

all along. On turning the surface D, Fig. 897, we shall have three of the surfaces done at right angles and with C and D parallel.

It is obvious that the surface D may be turned down on the angle plate and bolted as before, the surface A being set parallel to the chuck plate surface as before, and all four of these surfaces will be finished true as required. Next come the two end surfaces and the pin I. For F and the pin I we chuck the work on the angle plate, as shown in the plan view, Fig. 901, P,P representing the clamping-plates. The angle plate will here again serve to hold the work true one way, and all we have to do to set it true the other way is to fasten a pointer in the tool post and bring it up to just touch the corners of the work at the outer end, as at K. Now run the carriage up so as to bring the pointer to position L, and when the work is so set that all four corners just touch the

pointer, tried in their two positions, *without touching the cross-feed screw*, the work is true, and the end surface E and hole G may be turned; E will then be at a true right angle to the four faces, A, B, C, D, while G will be axially true with them.

We may, instead of using the pointer at K and L, or in addition to so using it, apply a square against the chuck plate and bring the blade against the work, as shown at R.

We have now to turn the pin I and end face, and to do this we simply reverse the work, end for end, and bolt it as before. But we may now employ the trued surface E as an aid in setting by causing it to abut against the chuck plate surface, and, as an aid to finding that it abuts fair, we may put two strips of the same piece of paper behind it, one on each side of the square, and, after the work is bolted, see that both are held firm; but

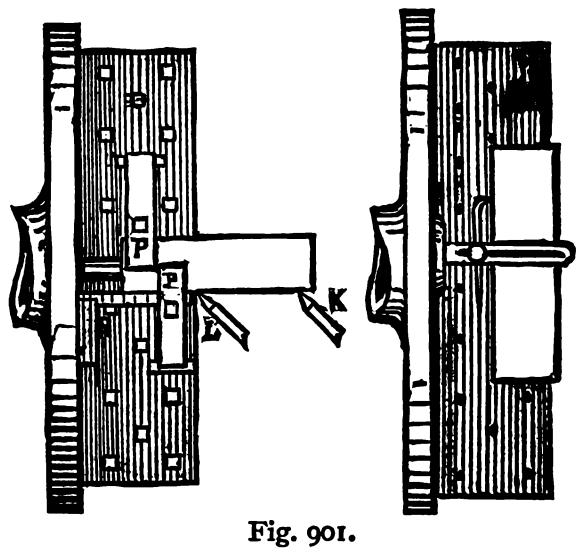

Fig. 901.

it is necessary to test with the pointer as before, as well as with the square.

It is obvious that the angle plate requires counterbalancing, which is done by means of the weight W. (Fig. 900).

An excellent example of angle plate chucking is furnished in a pipe bend requiring both flanges to be turned up. The method of chucking is shown in Figs. 902 and 903, the flanges being simply bolted to the angle plate. The work may be set true to the body of the bend close to the neck of the flange or by the circumference of the flange. The face of the flange will be held true one way by the face on the angle plate, but must be set true the other way. The truest flange should be the one first bolted to the angle plate.

A common but good example of angle plate chucking is shown in Fig. 904, which represents a cross head requiring to have its

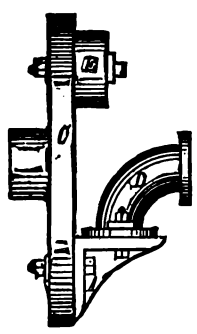

Fig. 902.

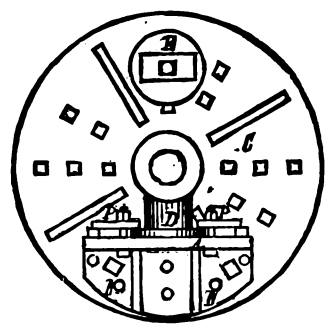

Fig. 903.

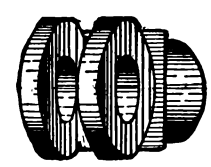

Fig. 904.

two holes bored one at a right angle to the other, the jaws faced inside and outside, and the hub or boss turned.

It would be proper to mark the cross-head out by lines, giving dotted circles to set the work by, and dotted lines to give the thickness of the jaws. In thus marking out two centre lines A A and B B in Fig. 905 would be used to locate the centres of the holes; and the thickness of the jaws would be marked from the line B B. In marking these lines the cross head should be rested upon a table or plate as in Fig. 905, and the line A A should be made with the jaws of the cross head lying flat on the table, that is without the interposition of any packing or paper between them and the plate, so that the edges of the jaws on that side will be true with the line A A, and will therefore serve to apply a square against when chucking to bore the hole through the jaws.

If the jaw edges are not sufficiently true to permit of their lying on the table, they should be made so by filing a flat place on them, so that when a square is applied to them as in Fig. 906, the edges C, C will be parallel with the axis A A of the holes in the chucks or jaws. The first chucking should be as in Fig. 907, the cross head being bolted to an angle plate set true by the circle on the end face of its hub D, and a square being applied to the

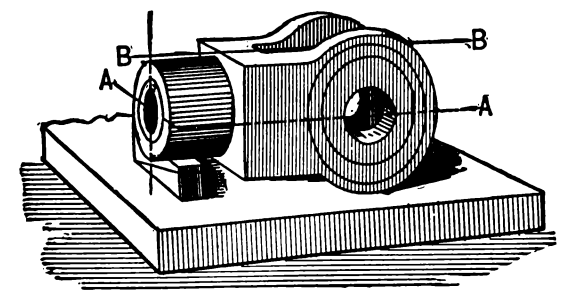

Fig. 905.

centre line A, as in Fig. 908, and to the dotted lines on the jaws as shown in Fig. 909. A balance weight W, Fig. 907, is necessary to counterbalance the weight of the angle plate.

The second chucking to bore the cheeks and face them inside and out to the required thickness would be as in Fig. 910, a single plate and two bolts being used to hold the cross head to the angle

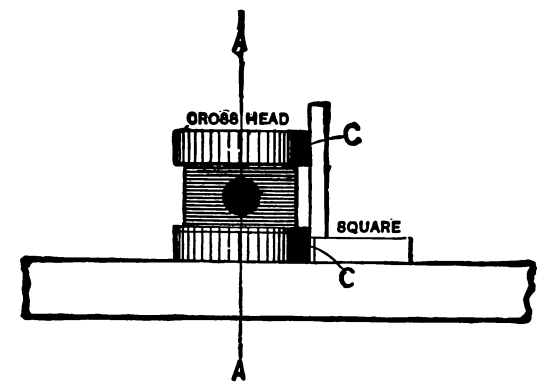

Fig. 906.

plate. To set the cross head true in one direction, the outer circle shown marked upon the face of the cheek is used.

It remains to so set the face of the cheeks that the hole through them shall be central with that already bored through the hub D and all that is necessary to accomplish this is to set the edge true as shown in the top view in Fig. 911, in which S is a square rested against the face of the chuck and applied to the edges of the cheeks, these edges being those that were rested on the plate

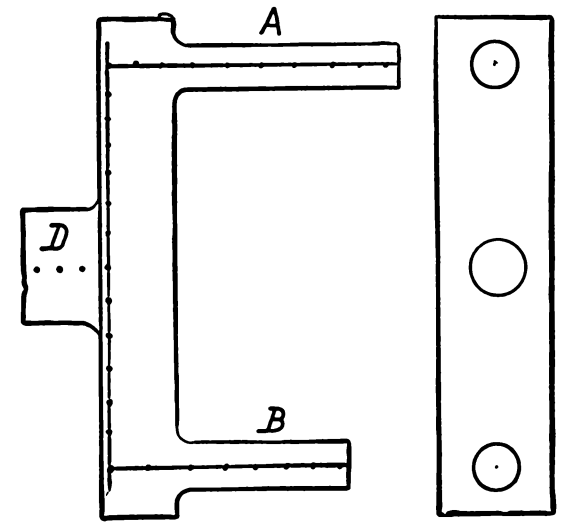

Fig. 912.

when marking the line A A in Fig. 905, or that were filed square if it was found necessary as already mentioned.

The inside faces of the cheeks are turned to the dotted lines shown in Fig. 909, and the outside faces being turned each to the proper thickness measured from the outside ones, the job will be complete and true in every direction.

An excellent example of angle plate chucking is shown in Fig. 912—the actual dimension of the piece, measuring, say, 24 inches

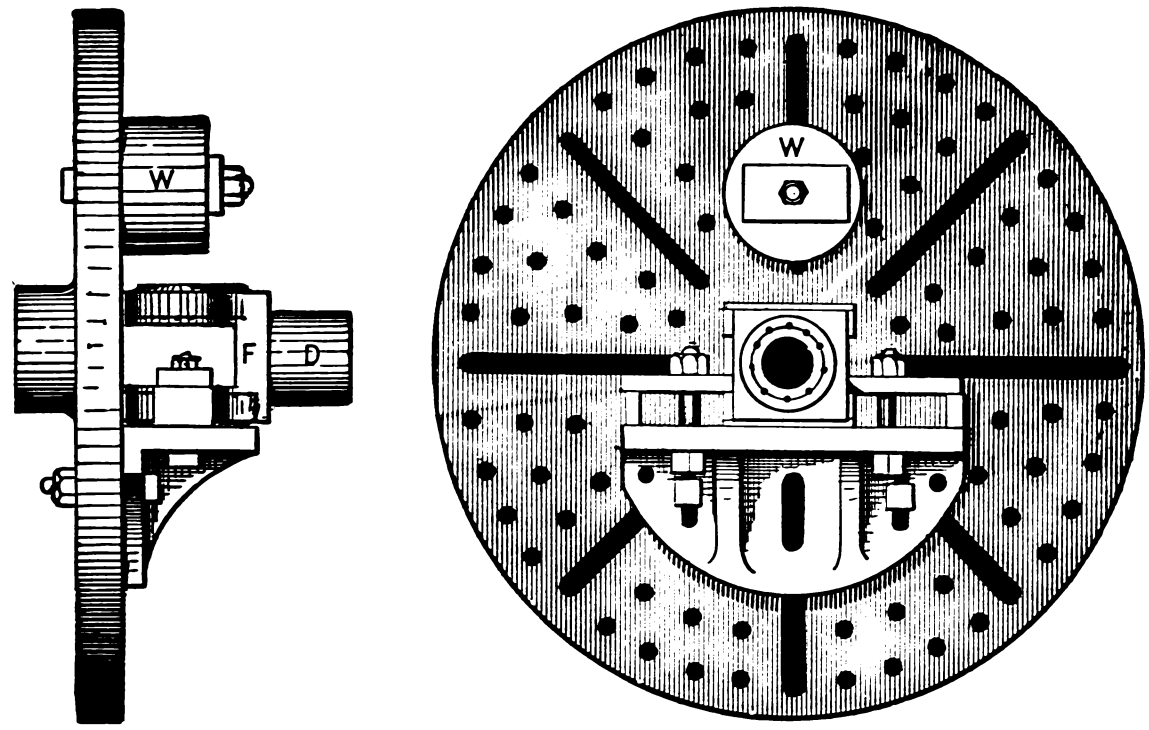

Fig. 907.

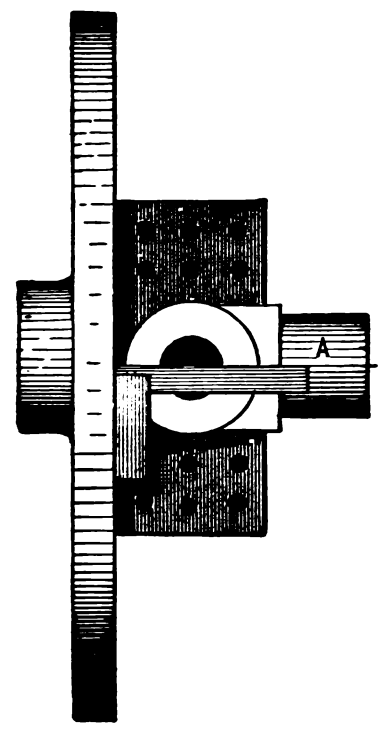

Fig. 908.

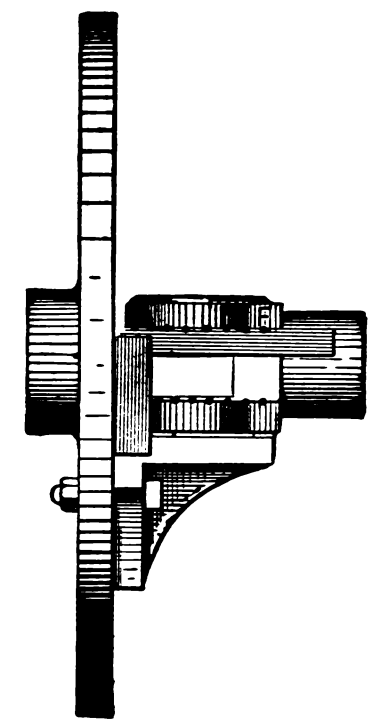

Fig. 909.

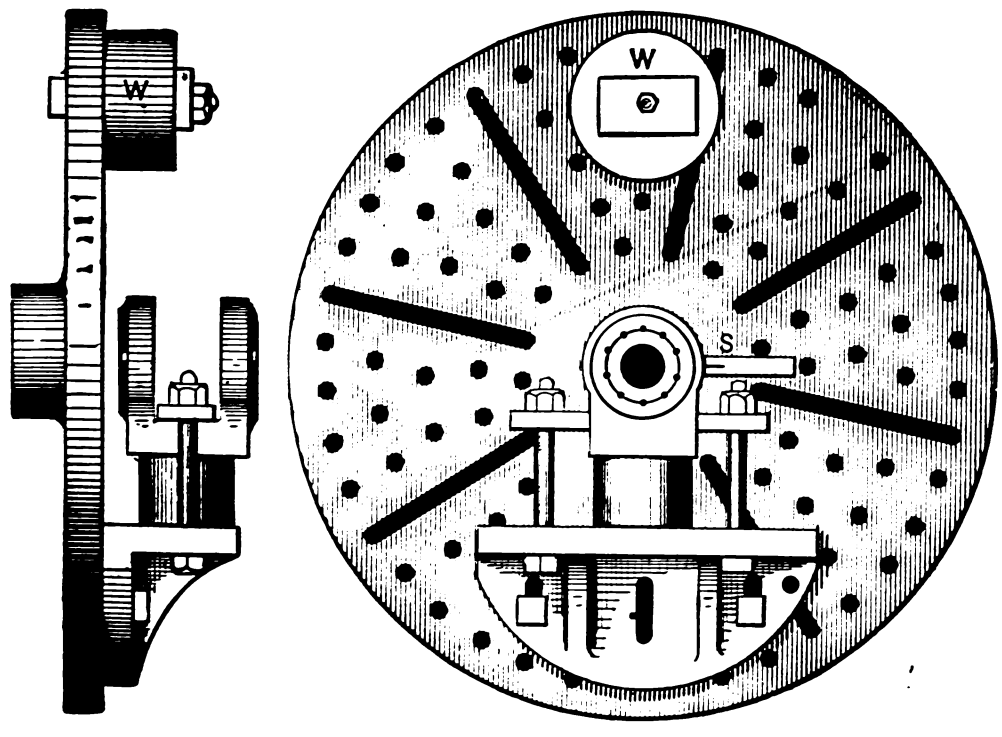

Fig. 910.

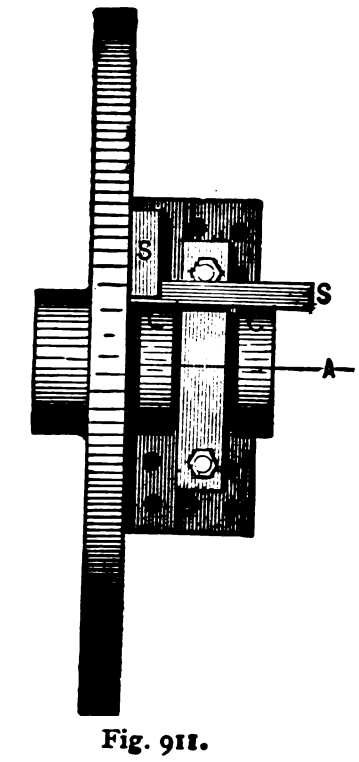

Fig. 911.

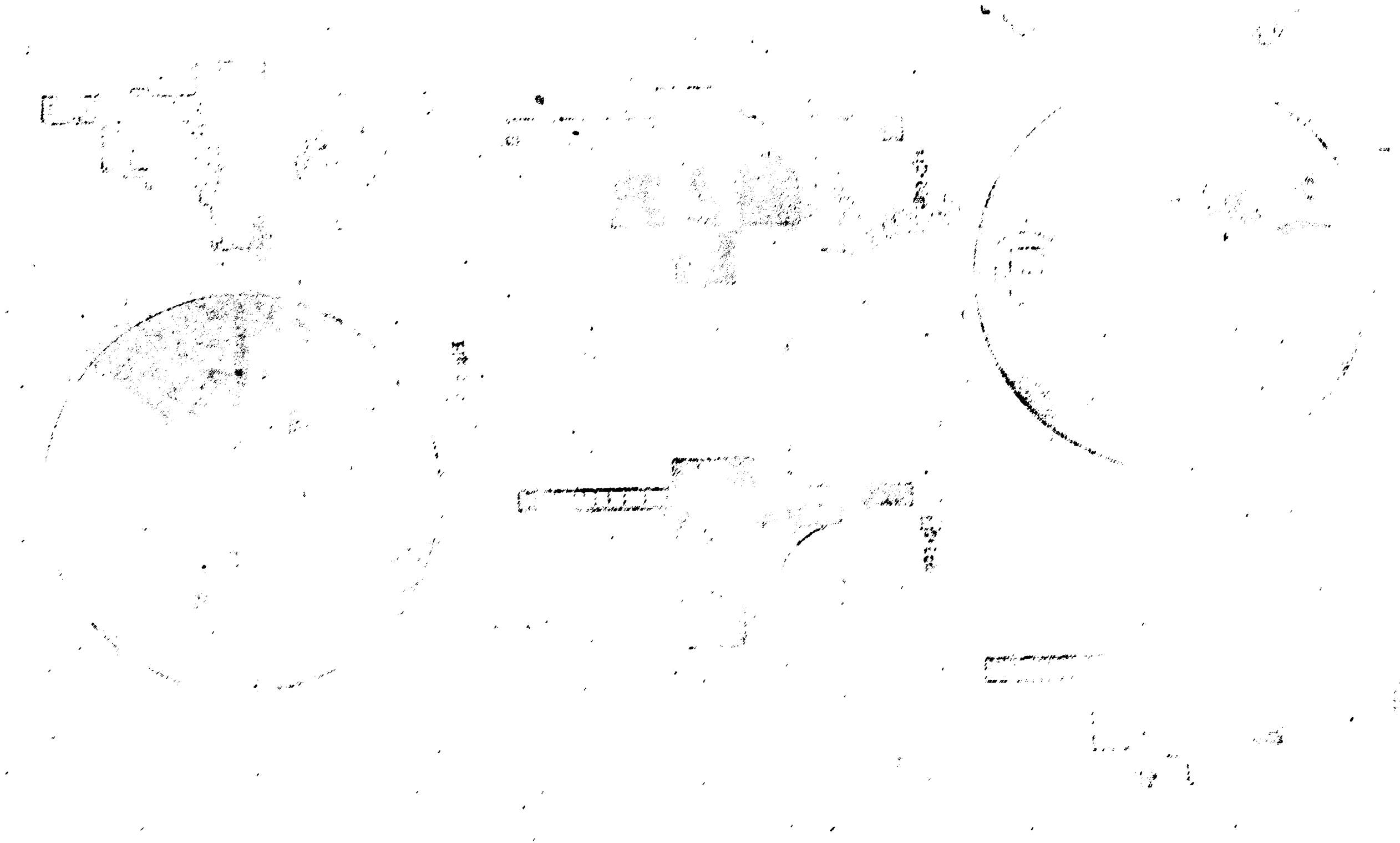

in length. It is required to have the cylindrical stems A, B turned parallel to each other, of equal diameters, equidistant from the central hole C, and true with the hub D. A large piece of work of this kind would be marked off with lines defined by centre-punch dots, as shown. The ends of A, B, D would require dotted circles to set them by. Now, in all work of this kind it is advisable to turn that surface first that will afford the greatest length of finished surface, to serve as a guide for the subsequent chucking, turned. Either inside calipers or a surface gauge may be employed to set E E parallel to the chuck plate surface. It is supposed that the location C is defined by a dotted circle, by which the work may be set for concentricity, as should be the case. At the next chucking it will simply be necessary to move

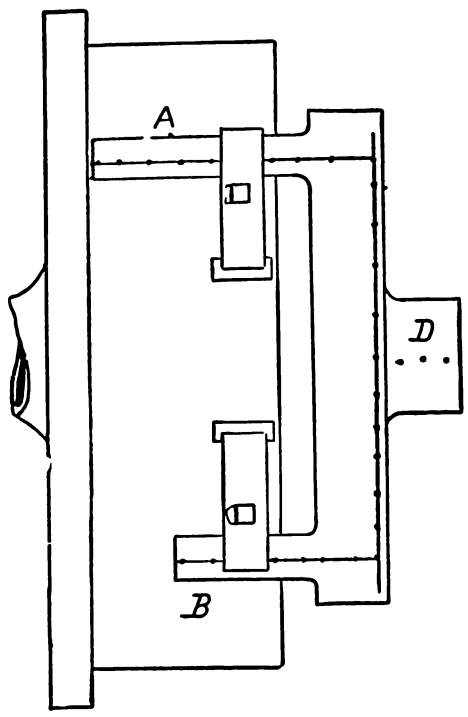

Fig. 913.

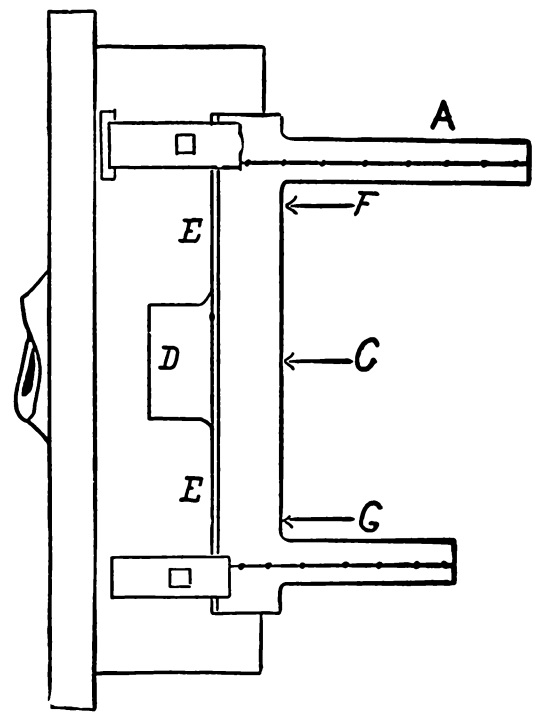

Fig. 914.

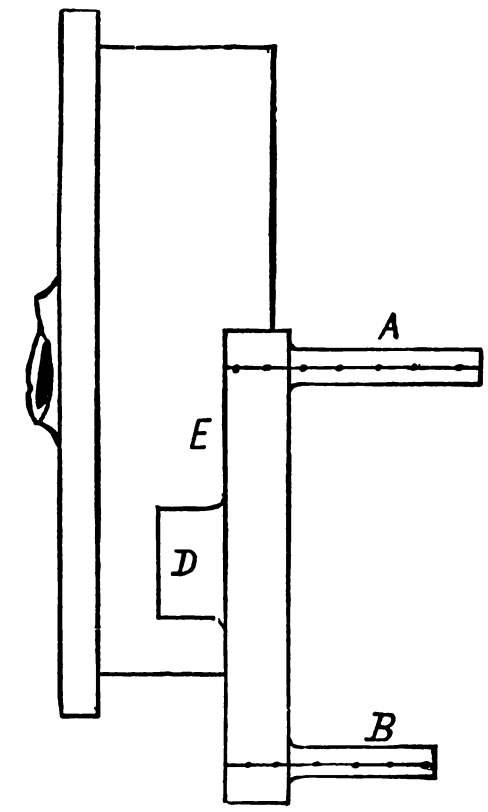

Fig. 915.

which in this case is the hub D, and the face on that side as denoted by the dotted line which has to be cut to that line. The method of chucking would, for this purpose, be as in Fig. 913.

The second chucking would be as in Fig. 914 to bore the hole at C, while, at the same time, the surface from F to G may be

the work on the angle plate to the position shown in Fig. 915, setting the circle on the end of A to run true, and the surface E parallel to the chuck surface as before. The third chucking is made by simply moving the work on the angle plate again, and setting as in the last instance.

Chapter X.—CUTTING TOOLS FOR LATHES.

THE cutting tools for lathes are composed of a fine grain of cast steel termed "tool-steel," and are made hard, to enable them to cut, by heating them to a red heat and dipping them in water, and subsequently reheating them to temper them or lower their degree of hardness, which is necessary for weak tools.

These cutting tools may be divided into two principal classes, viz., slide rest tools, or those held in the slide rest, and hand tools, which are held by hand.

The latter, however, have lost most of their former importance

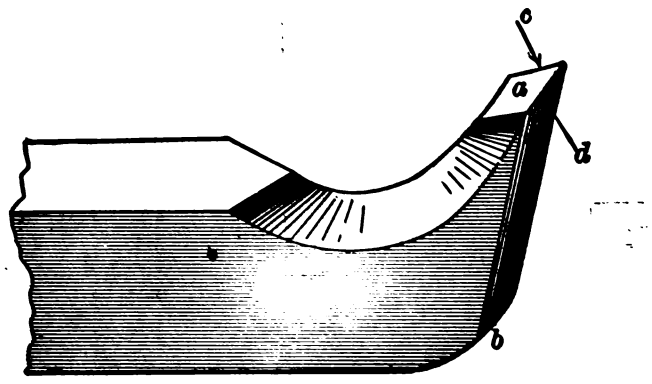

Fig. 916.

in the practice of the machine shop, by reason of the employment of self-acting lathes.

The proper shape for lathe slide rest tools depends upon—

1st. The kind of metal to be cut.

2nd. Upon the amount of metal to be cut off.

3rd. Upon the purpose of the cut, as whether to rough out or to finish the surface.

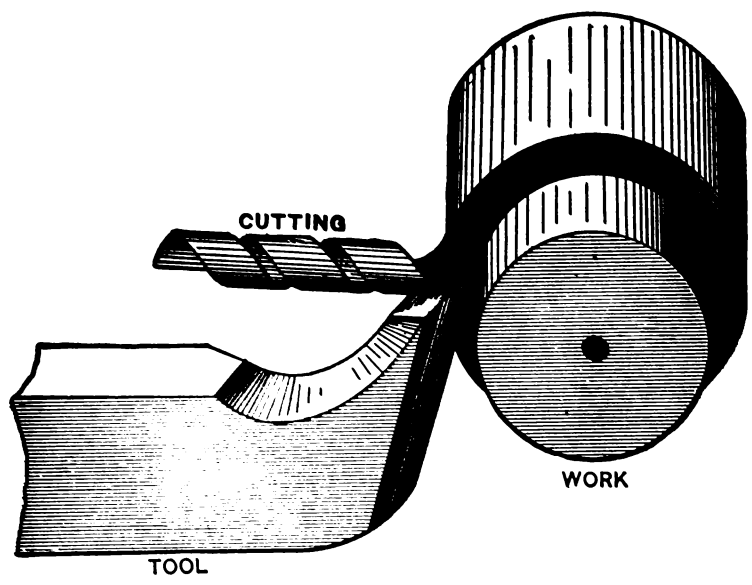

Fig. 917.

4th. Upon the degree of hardness of the metal to be cut.

5th. Upon the distance the tool edge is required to stand out from the tool clamp, or part that supports it.

Lathe tools are designated either from the nature of their duty, or from some characteristic peculiar to the tool itself.

The term "diamond point" is given because the face of the tool is diamond shaped; but in England and in some practice in the United States the same tool is termed a front tool, because it is employed on the front of external work.

A side tool is one intended for use on the side faces of the work, as the side of a collar or the face of a face plate. An outside tool is one for use on external surfaces, and an inside one for internal, as the walls or bores of holes, &c.

A spring tool is formed to spring or yield to excessive pressure rather than dig or jump into the work.

A boring tool is one used for boring purposes.

The principal forms of cutting tools for lathes are the diamond points or front tools, the side tools (right and left), and the cutting off or parting tool. The cutting edges of lathe tools are formed by grinding the upper surface, as *a* in Fig. 916, and the bottom or side faces as *b*, so that the cutting edges *c* and *d* shall be brought to a clean and sharp edge, the figure representing a common form of front tool. The manner in which this tool is used to cut is shown in Fig. 917, in which the work is supposed to be revolved between the lathe centres in the manner already described with reference to driving work in the lathe. The tool is firmly held in the tool post or tool clamp, as the case may be, and is fed into the work by the cross-feed screw taking a cut to reduce the work diameter and make it cylindrically true; the depth to which the tool enters the work is the depth of the cut. The tool is traversed, or fed, or moved parallel to the work axis, and the motion in that is termed the feed, or feed traverse.

The cutting action of the tool depends upon the angles one to the other of faces B, D (Fig. 918), and the position in which they are

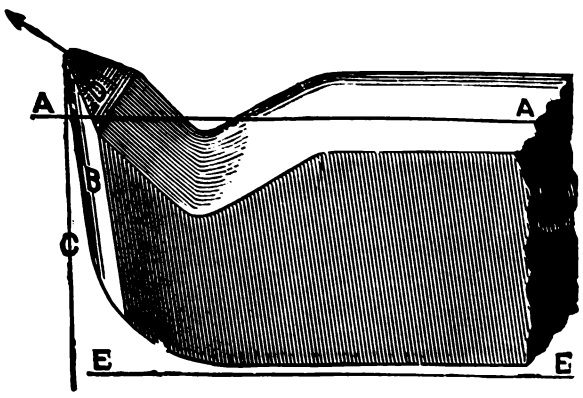

Fig. 918.

presented to the work, and in discussing these elements the face D will be termed the top face, and its inclination or angle above an horizontal line, or in the direction of the arrow in Fig. 918, will be termed the rake, this angle being considered with relation to the top A A, or what is the same thing, the bottom E E of the tool steel. The angle of the bottom face B to the line C is the bottom rake, or more properly, the clearance.

In the form of diamond point or front tool, shown in Fig. 916, there is an unnecessary amount of surface to grind at *b*, hence the

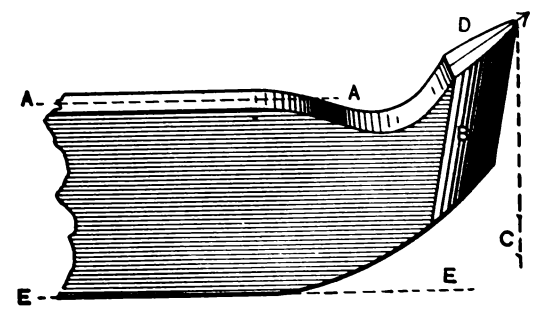

Fig. 919.

form shown in Fig. 919 is also employed on light work, while it is in its main features also employed on large work, hence it will be here employed in preference to that shown in Fig. 916, the cutting action of the two being precisely alike so long as the angles of the faces are equal in the two tools.

The strength of the cutting edge is determined by the angles of the rake and clearance, but in this combination the clearance has the greater strength value. On the other hand the keenness of the tool though dependent in some degree upon the amount of

clearance, is much more dependent upon the angle of the top face.

It follows therefore that for copper, tin, lead, and other metals that may be comparatively easily severed, a tool may be given a maximum of top rake, and it is found in practice that top rake can be employed to advantage upon steel, wrought iron, and cast iron, but the amount must be decreased in proportion as the nature of either of those metals is hard.

For the combinations of copper and tin which are generally termed brass or *composition*, either no top rake or negative top rake is employed according to the conditions.

It may be pointed out, however, that in a given tool the cutting qualification is governed to a great extent by the position in which the tool is presented to the work, thus in Fig. 920, let C represent a piece of work and B, B, B, B, four tools having their

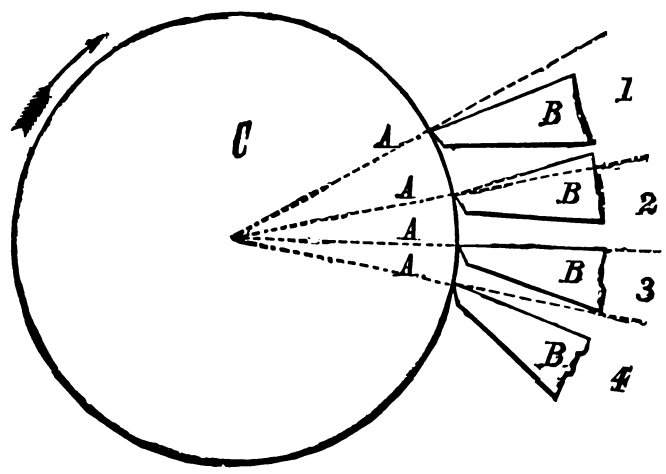

Fig. 920.

top and bottom faces ground at the same angle to each other. In position 1, the top face of the tool is at an acute angle below the radial line A, hence the tool possesses top rake, the amount being about suitable for hard steel or hard cast iron.

In position 2 the top face is at an acute angle above the radial line A, hence the tool has negative top rake, the amount being about suitable for brass work under some conditions.

In position 3 the top face has no rake of any kind, and the tool is suitable (in this respect) for ordinary brass work.

In position 4 the tool possesses an amount of top rake about suitable for ordinary wrought-iron work.

If the tool was presented to brass work in positions 1 or 4 it would rip or tear the metal instead of cutting it, while if the tool was presented to iron or steel (of an ordinary degree of hardness) in positions 2 or 3, it would force rather than cut the metal.

Furthermore it will be readily perceived that though each tool

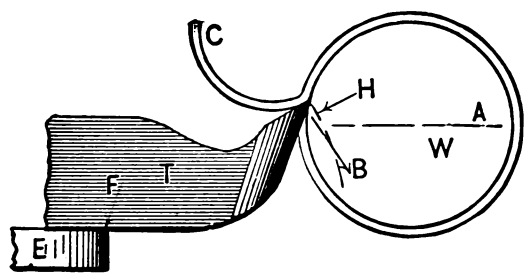

Fig. 921.

may have its faces, whose junction forms the cutting edge, at the same angles, yet the strength of the cutting edge is varied by the position in which the tool is presented to the work, thus the edge in position 2, will be weaker than that in position 4.

We have now to consider another point bearing upon the proper presentment of top rake and the presentment of the tool to the work. It is obvious that the strain of the cut falls upon the top face of the tool, and therefore the direction in which this strain is exerted is the direction in which the tool will endeavour to move if the strain is sufficient to bend the tool and cause motion.

In Fig. 921 let W represent the work having a cut C being taken off by the tool T; let E represent the slide rest, and F the extreme point at which the tool is supported; then the pressure placed by C on the top face of the tool will be at a right angle to the plane of that top face, or in the direction of the arrow B; to whatever amount therefore the tool sprung under the cut pressure (its motion being in an arc of a circle, of which F is the centre) it would enter the work deeper, and as a result, the rough work not being cylindrically true, the tool will dip farthest beyond its proper line of work where the cut is deepest, and therefore will not cut the work cylindrically true; as this, however, naturally leads to a variation in the direction of the top rake, and as the cutting action of the point of such a tool differs from that of the side edge, which also leads to a variation in the direction of the top rake, it becomes

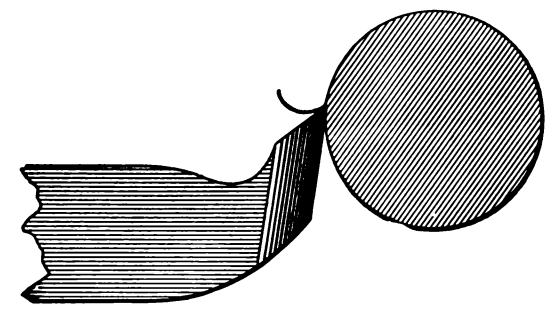

Fig. 922.

necessary to consider just what the cutting action is both at the point and on the side of the tool.

Suppose, then, that the tool carries so fine a cut that it cuts at the point only, and the pressure will be as denoted by the arrow B in Fig. 921.

If the tool be given no traverse, but be merely moved in towards the centre of the work, the cut will move outward and in a line with the body of the tool, the cutting coming off as shown in Fig. 922.

So soon, however, as the tool is fed to its feed traverse the form

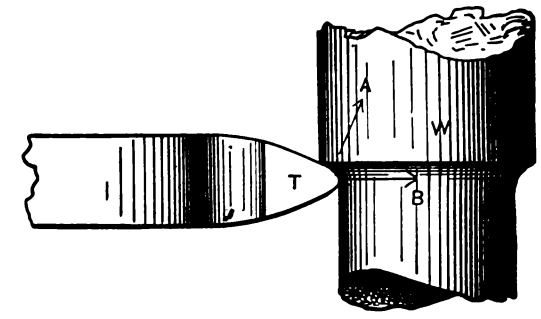

Fig. 923.

of the cutting alters to the special form shown in Fig. 917, and moves to one side of the tool, as well as outwards from the work.

Fig. 923 is a top view of a tool and piece of work, and the arrow A denotes the direction of the resistance of the work to the cut, being at a right angle to plane of the cutting edge.

Now the duty of the side edge is simply to remove metal, while that of the point is to finish the surface, and it is obvious that for finishing purposes the most important part of the tool edge is the point, and this it is that requires to be kept sharp, hence the angle or rake should be in the direction of the point. But when

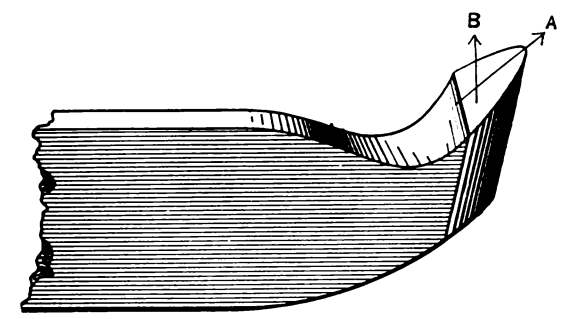

Fig. 924.

the object is to remove metal and prepare the work for the finishing cut the duty falls heavily on the side edge of the tool, and the angle of the top face and the direction of its rake may be varied with a view to increase the efficiency of the side edge, and at the same time to diminish the amount of power necessary to pull the tool along to its feed traverse. This may be accomplished by altering the top rake from front to side rake, which is done in varying degrees according to the nature of the work.

In Fig. 924 the angle of the top face in the direction of A is the front, and that in the direction of B is the side rake.

In small work where the cuts are not great, and where but one roughing cut is taken, it is an object to have the roughing cut leave the work with as smooth a surface as possible, and the amount of side rake may be small as in Fig. 924. For heavy deep cuts, however, a maximum of side rake may be used.

Thus in Fig. 925 is an engraving of a tool used for roughing in the Morgan Iron Works, its top rake being all side rake.

When a tool has side rake, its cutting capacity is obviously increased on one side only, hence it should be fed to cut on that

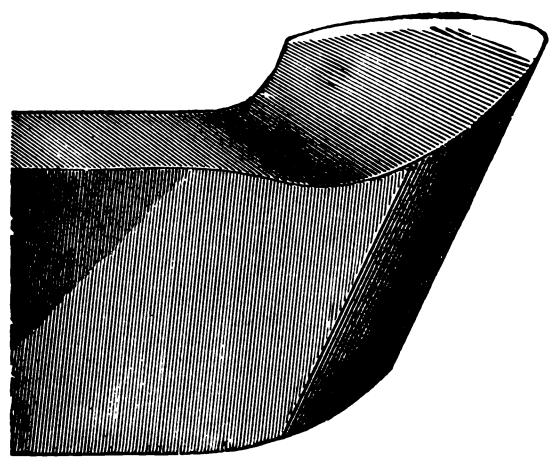

Fig. 925.

side only. It is for this reason that no side rake is given to tools for very small and short work, because it is then more convenient to traverse the tool to cut in either direction at will.

In long and large work, however, where the motion of the slide rest is slow, tools having right and left-hand side rake are used. The tools in Figs. 924 and 925 are right-hand tools, their direction of feed travel being to the left.

In Fig. 926 is a left-hand tool, its direction of feed traverse

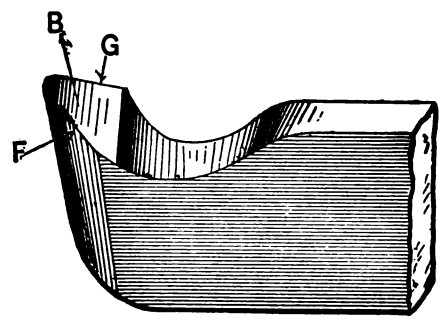

Fig. 926.

being from left to right; hence edge G is the cutting one, edge F being dulled by the side angle B.

It is obvious that various combinations of side rake and front rake may be given to produce the same degree of keenness to the tool. For example, a tool may have its keenness from side rake alone, or it may have the same degree of keenness by using

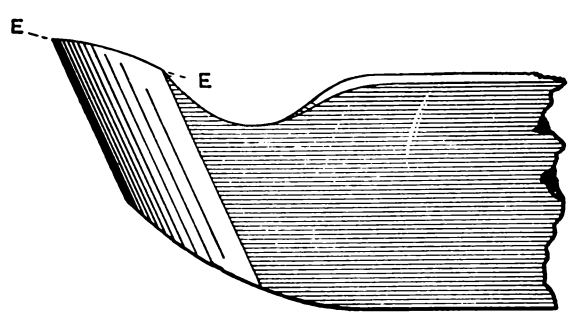

Fig. 927.

less side rake and some front rake. The principles governing the selections of these combinations are as follows :—

Suppose that in addition to say 20 degrees of side rake a tool is given a certain amount of front rake as denoted in Fig. 927 by E E, and suppose that the tool is moved in to its cut by the cross feed screw. During this motion and until the tool point meets the work surface the contact between the cross feed screw and feed nut will be on the sides of the threads facing the line of lathe centres, and all the play between those threads will be on their other sides, but so soon as the tool meets the cut it will jump forward and into the work to the amount that the play between the threads will allow it, and this is very apt to cause the tool to break. Furthermore the point of the tool is apt from its extreme keenness to become dulled quickly.

The amount of side rake may, however, be considerably increased if the heel D, Fig. 928, be made higher than the point A in that

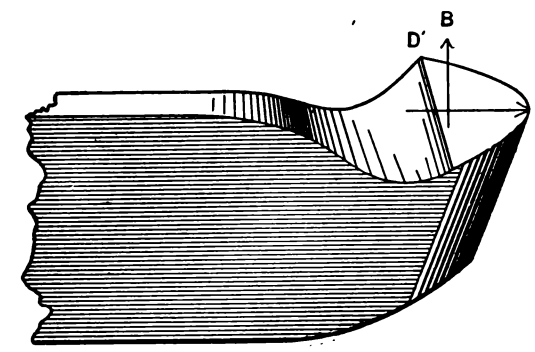

Fig. 928.

figure, the plane of the middle being denoted by the arrow at A; a view of the other side of this tool is shown in Fig. 929, the plane of the cutting edge being denoted by the dotted line.

A tool thus formed will require a slight cross feed screw pressure to force it to its cut, thus causing the cross feed nut to have contact with the sides of the thread in contact when winding the tool into its cut, hence the tendency to jump into the depth of cut

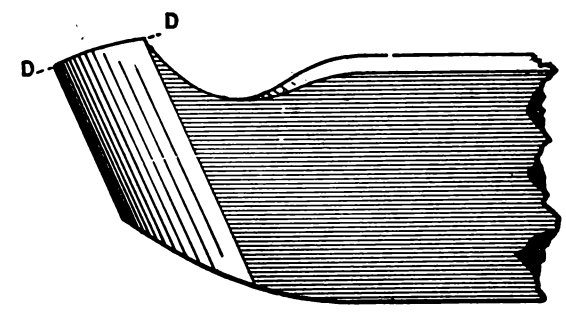

Fig. 929.

is eliminated, and regulating the depth of the cut is much more easily accomplished.

In proportion as a tool is given side rake, it is more easily traversed to its cut, as will be perceived from the following :—

Fig. 930 represents a section of a tool T, whose feed traverse is in the direction of A. Now all the force that is expended in bending the cutting C out of the straight line, or in other words the pressure on the top face of the tool, acts to a great extent to force the tool to the left, and therefore traverse it to its feed. The more side rake a tool has the nearer the thickness of its cutting will accord to the thickness of the feed traverse. For example, if a

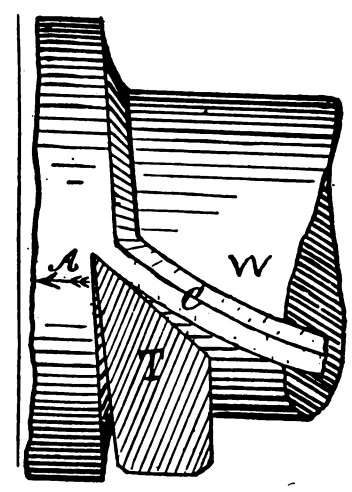

Fig. 930.

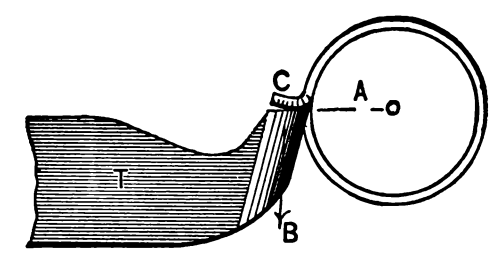

Fig. 931.

tool having a side rake of say 35 degrees of angle feeds forward $\frac{1}{32}$ inch per work revolution, the thickness of the cutting will but slightly exceed $\frac{1}{32}$ inch, but if no top rake at all be given, as shown in Fig. 931, then the cutting will come off nearly straight, will be considerably thicker than $\frac{1}{32}$ inch, and will be ragged and broken up, and it follows that the thickening and the bending of the cutting has required an expenditure of the driving power of the lathe, diminishing the depth of cut the lathe

will be capable of driving. With such a tool the pressure of the cut will fall downwards as denoted by the arrow B.

In the practice of many tool makers in the Eastern States the tool is ground to a point A, Fig. 932, that is, ground sharp and merely rounded off with an oil-stone. This may serve when the lathe has an exceedingly fine feed, and the strain being in that case very slight the tool point may be made to stand well above the level of the body of the steel, as in the figure, and thus save forging; but this is a slow method of procedure, and produces no better work than a tool which is rounded at the point, and therefore capable of producing smoother work with a much coarser feed.

The diameter of the curls of the cutting, shaving, or chip produced by a turning and also the direction in which it moves after

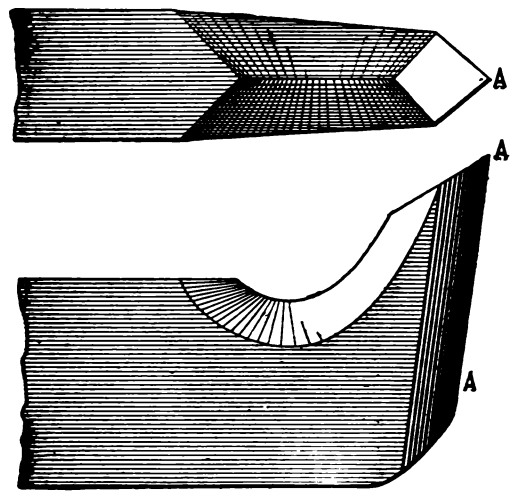

Fig. 932.

leaving the tool, depends upon the amount of the top rake and the direction in which it is provided. The greater the amount of rake, whether it be front or side rake, the larger the coils of the cutting, and, therefore, the less the amount of power expended in bending it. Furthermore, it may be remarked that the thickness of the cutting is always greater than is due to the amount of feed traverse, and it requires power to produce this thickening of the cutting. The larger the coils of the cutting the nearer the thickness accords with the rate of feed.

In these considerations we have referred to the angle of the top face only, but if we consider the angle of the two faces one to the other we shall see that they form a wedge, and that all cutting tools are simply wedges which enter the material the more easily

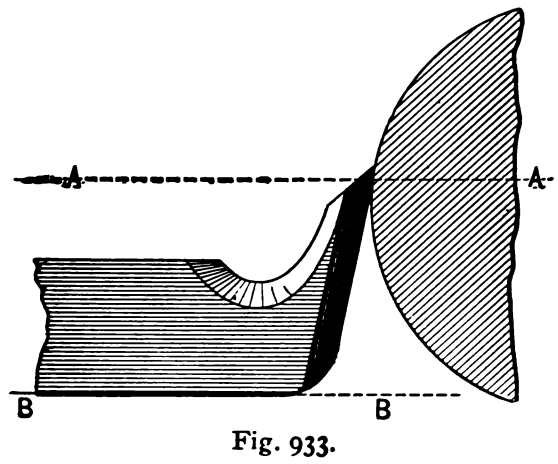

Fig. 933.

in proportion as the angles are more acute, providing always that they are presented to the work in the most desirable position, as was explained with reference to Fig. 920.

We may now consider the degree of a bottom rake or clearance desirable for a tool, and this it can be shown depends entirely upon the conditions of work, diameter, and rate of tool traverse, and cannot, therefore, be made a constant degree of angle. This is shown in Fig. 934, in which a tool T is represented in three positions, marked respectively 1, 2, and 3. Line A A is at a right angle to the axis of the work W, and the side of the tool is given in each case 5° of angle from this line A A. In position 1 the tool has 3° of clearance from the side of the cut; in position 2 it has 2° clearance, but in position 3 it would require to have 2° more clearance given to it to enable the cutting-edge to meet the side of the cut, without even then having the clearance necessary to enable it to cut. This occurs because the side of the cut is not at a right angle to the work axis, but at an angle the degree of which depends upon the rate of feed.

Thus in Fig. 935 the three tools have the same amount of clear-

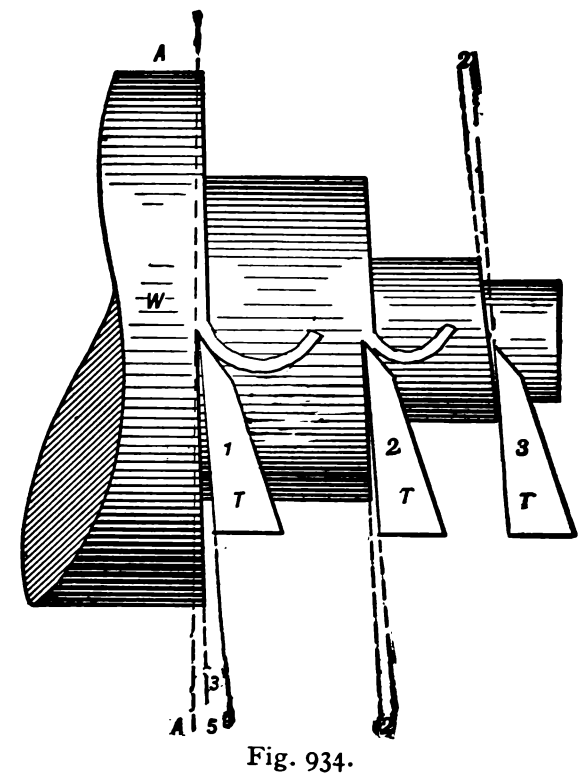

Fig. 934.

ance, and if they are supposed to be facing off the work they will maintain that clearance under all conditions of work, diameter, and rate of feed, but if they were traversed along instead of across the work the angle of the tool (both on the top and bottom face)

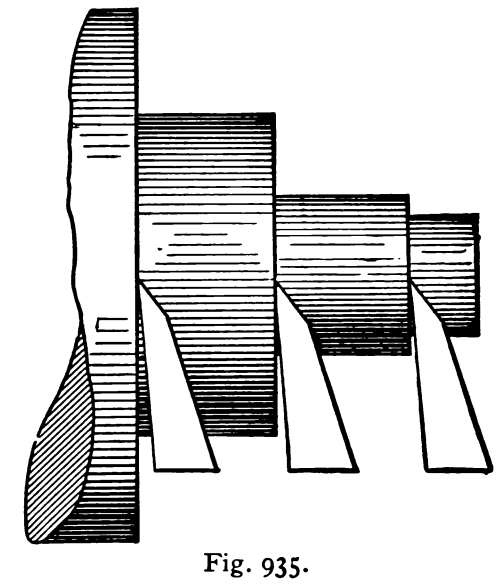

Fig. 935.

to the cut will become changed, and will continue to change with every change of work diameter, so that the same tool stands at a different angle at each successive cut taken off the work, even though the lathe were used at or possessed but one rate of feed.

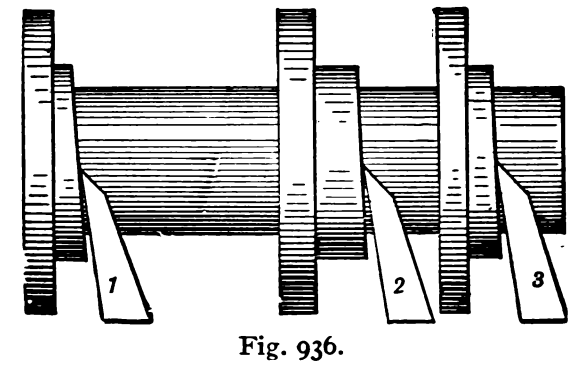

Fig. 936.

But lathe tools are used at widely varying rates of feed, and we may therefore take an example in which a tool is at work taking a cut of the same diameter and depth at different rates of feed.

This is shown in Fig. 936, tool 1 taking the coarsest, and 2 the

finest feed, and it is seen that the finer the rate of feed the more clearance the tool has with a given degree of side clearance (for all the three tools have 7° of side angle). The only way to obtain an equal degree of clearance from the cut, therefore, clearly lies in giving to a tool a different angle for every variation, either in work diameter or in rate of feed traverse, and to show how much this will affect the shape of the tool, we have Fig. 937, in which the same rate of feed is used for all three cuts, and the tool is given in each position 5° of clearance from the cut. In position 1 the tool side stands at 8½° of angle from line A, which is at a right angle to the work axis. In position 2 it stands at 10½°, and in position 3 at 15° of angle from line A, a variation of 6½°. Referring now to the top face of the tool, the variations occur to the same

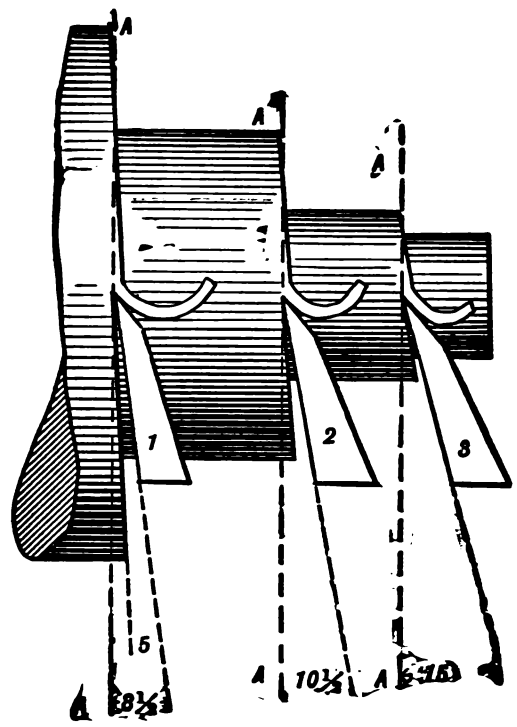

Fig. 937.

extent and from the same causes. It is in a fine degree of perception of these points that constitutes the skill of expert workmen in grinding their lathe tools, varying the angle of the tool at every grinding to suit the varying requirements.

It has been shown that for freedom of cutting and ease of driving a given cut, the direction of top rake as well as its degree needs to be a maximum that the nature of the material and its degree of hardness will admit; but this is not the only consideration, because in a finishing cut the surface requires to be left as smooth and clean cut as possible, and it remains to consider how this may best be accomplished. Now let it again be considered that it is that part of the cutting edge that lies at a right angle to the axial line of the work that removes the metal, while it is that

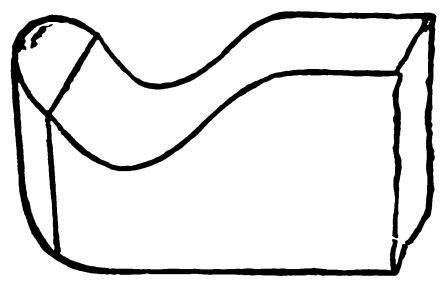

Fig. 938.

part that lies parallel to the work axis (or in other words parallel to the finished work surface) that performs the finishing cutting duty.

Now, in proportion as the length of the cutting edge is disposed parallel to the work axis, the tool has a tendency to spring (under an increase of cut) into the work, and also to dip into soft places or seams in the work, and the amount of its front rake must be decreased, because such rake causes a pressure pulling the tool deeper into its cut, as was explained with reference to Fig. 921. Round-nosed front tools, therefore, such as in Fig. 938, cannot be given so much front rake as ordinary ones, such as in the preceding figures.

Round-nosed tools are used to cut out round corners, and the roughing tools are given a less curvature than that to be formed on the work, thus in Fig. 939 is an ordinary form of small round nose shown operating in what is termed a hollow corner, the directions of tool feed being marked by arrows. The tool may be fed by the feed traverse, and the tool gradually withdrawn, thus forming the work to the required curve.

The amount of cut a lathe will drive, the degree of hardness which the tool may be given, the length of time the tool will last

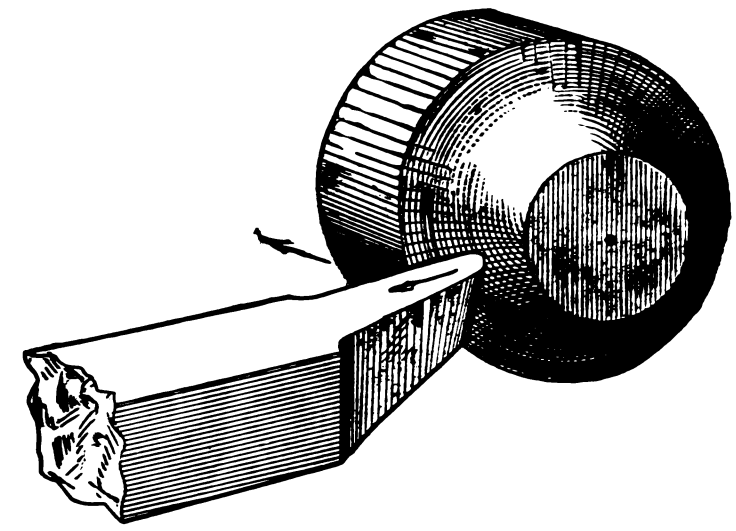

Fig. 939.

without grinding, the speed at which the work may run, and the cleanness and truth of the cut, depend almost entirely upon the perfect adaptability of the tool to the conditions under which it is to be used. Upon the same kind of work, and using the same kind of tools, some workmen will give a tool from 20° to 30° more angle than others.

It is a difficult matter to determine at just what point the utmost duty is being obtained from cutting tools, because the conditions

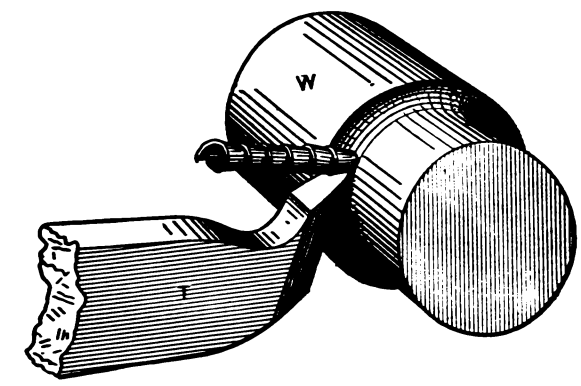

Fig. 940.

of use are so variable; but one good general guide is the speed at which the tool cuts, and another is the appearance of the cuttings or chips.

Both these guides, however, can only be applied to metal not unusually hard, and to tools rigidly held, and having their cutting edges sufficiently close to the tool point or clamp that the tool itself will not bend and spring from the pressure of the cut. The cutting speed for chilled cast-iron rolls, such, for example, as

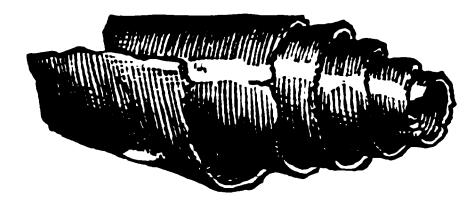

Fig. 941.

calender rolls, is but about 7 feet per minute, and the angles one to the other of the tool faces is about 75 degrees, the top face being horizontally level, and standing level with the axis of the roll.

When a tool has front rake only, the form of its cutting will depend upon the depth of its cut. With a very fine cut the cutting will come off after the manner shown in Fig. 940, while as the depth of the cut is increased, the cutting becomes a coil such as shown in Fig. 941. These coils lie closer together in propor-

tion as the top face of the tool is given less rake, as is necessary for steel and other hard metal. Thus Fig. 940 represents a cutting from steel, the tool having front rake only, while Fig. 941 represents

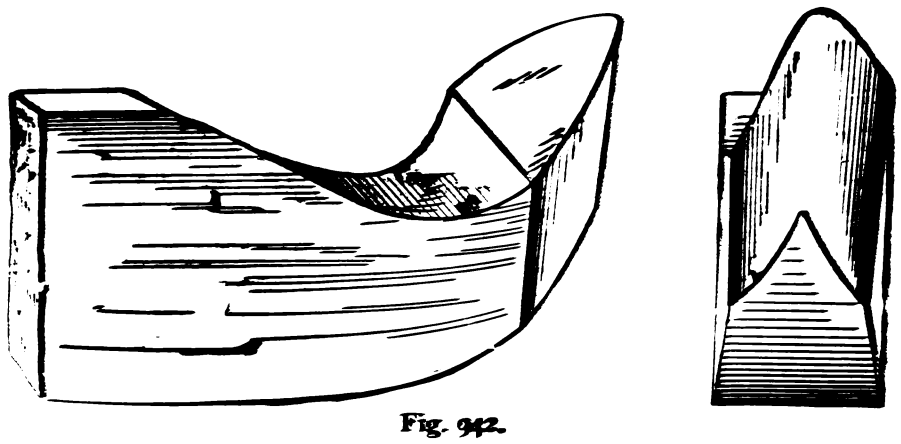

Fig. 942.

a cutting from a steel crank pin, the tool having side rake. The following observations apply generally to the cuttings.

The cleaner the surface of a cutting, and the less ragged its edges are, the keener the tool has cut; thus, in Fig. 941, the raggedness shows that the tool was slightly dulled, although not

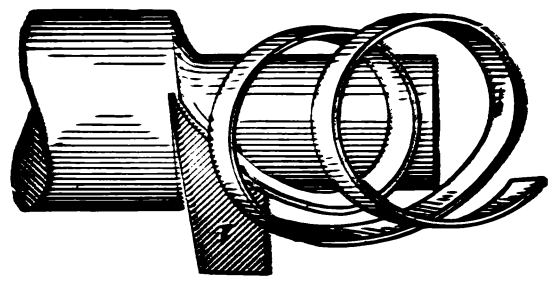

Fig. 943.

sufficiently so to warrant the regrinding of the tool. Such a cutting, however, taken off wrought iron would show a tool too much dulled, or else possessing too little top rake to cut to the best advantage. In wrought iron, the tool having a keener top face, the cuttings will coil larger, and the direction in which they coil and move as they leave the tool will depend upon the shape of the tool and its height to the work.

In Fig. 942, for example, is a tool having front and side angle in about an equal degree, and its cutting is shown in Fig. 943,

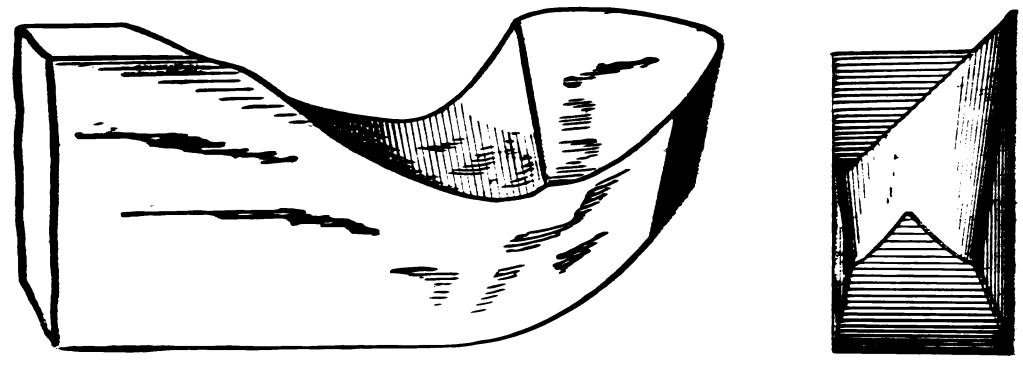

Fig. 944.

the side angle causing it to move to the right, and the front angle causing it to move towards the tool post.

The tool in Fig. 944 has side rake mainly, and the point is slightly depressed, hence its cutting would leave the work moving horizontally and towards the right hand

In Fig. 945 the point of the tool is made considerably lower than the point B, and as a result the cutting would rise somewhat vertically as in Fig. 946. Indeed the heel B may be raised so as to cause the cutting to move but little to the right, but rise up almost vertically, being thrown over towards the work, and in extreme cases the cutting will rub against the surface of the work and the friction will prevent the cutting from moving to the right, hence it will roll up forming a ball, the direction of the rotation occasionally changing.

Whatever irregularities may appear in the coil of the cuttings

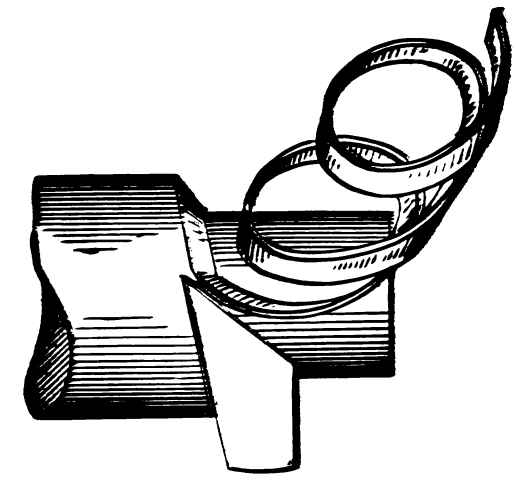

Fig. 946.

will, if the tool is not dulled from use, arise from irregularities in the work and not from any cause attributable to the tool.

The strength of a cutting forms to a great extent a guide as to the quality of the tool, since the stronger the cutting the less it has become disintegrated, and therefore less power has been expended in removing it from the work.

The cutting speed for wrought iron should be sufficiently great that water being allowed to fall upon the work in a quick succession of drops as, say, three per second, the cuttings will leave the work so hot as to be almost unbearable in the hands, if the cut is a heavy one, as, say, reducing the work diameter ½ inch at a cut.

If wrought-iron cuttings break off in short pieces it may occur from black seams in the work, but if they break off short and show no tendency to coil, the tool has too little rake. If the tool

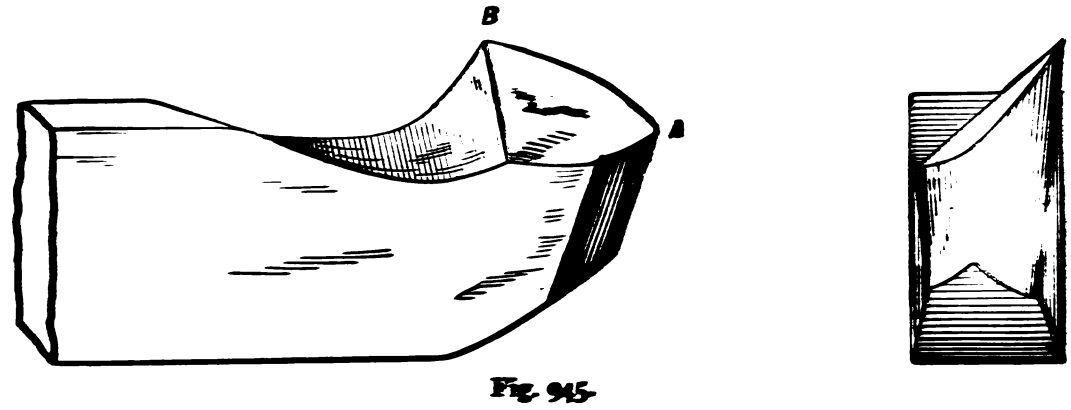

Fig. 945.

gets dull too quickly and the cutting speed is not excessive, then the tool has too much clearance. If the tool edge breaks there is too much rake (providing of course that the tool has not been burnt in the forging or hardening), a fine feed will generally produce longer and closer coiled cuttings (that is of smaller diameter)

than a coarse feed, especially if the work be turned dry or without the application of water.

Aside from these general considerations which apply to all tools, there are peculiar characteristics of particular metals; thus, for example, cast iron will admit of the tool having a greater width of cutting edge in a line with the finished surface of the metal than either steel, wrought iron, copper or brass, which renders it possible to use a finishing tool of the form shown in

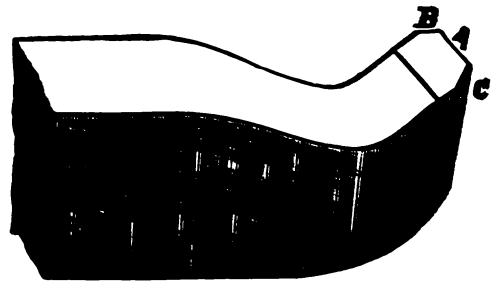

Fig. 947.

Fig. 947, whose breadth of cutting edge A, lying parallel with the line of feed traverse, may always exceed that for other metals, and may in the case of cast iron be increased according to the rigidity of the work, especially when held close in to the tool post.

The corners B C may for roughing the work be rounded so as to be more durable, but for finishing cuts they should be bevelled as shown, because by this means face A can more easily be left straight than would be the case with a rounded corner. In the

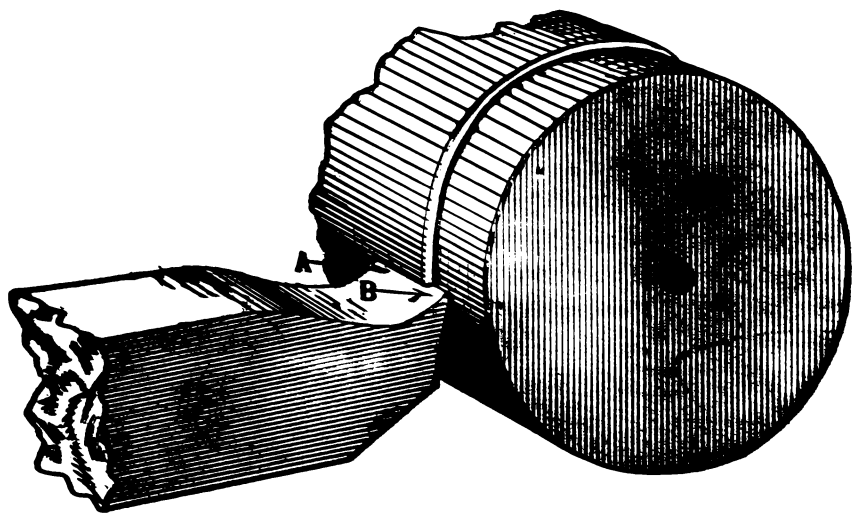

Fig. 948.

absence of the bevels there would be a sharp corner that would soon become dull. For finishing purposes the corners need not be so much bevelled as in figure, but may be very slightly relieved at the corners A and B, in Fig. 948, the width of the flat nose being slightly greater than the amount of feed per lathe revolution. Such tools produce the quickest and best work without chattering when the conditions are such that the work and

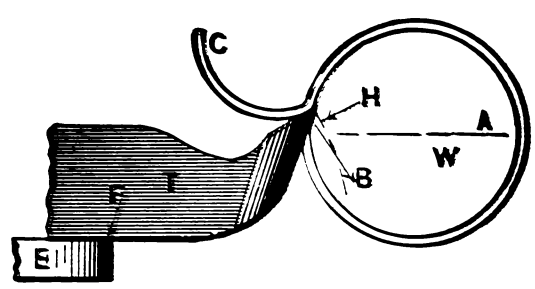

Fig. 949.

the tool are held sufficiently rigid, and in that case may be used for the harder and tougher metals, as wrought iron and steel.

We have now to consider the height of the tool with relation to the work, which is a very important point.

In Fig. 949, for example, let E be the washer or ring under the tool, and F therefore the fulcrum from which the tool will bend. Let the horizontal dotted line A represent the centre of the work, and it is plain that to whatever amount the tool may spring under the pressure of the cut, its motion from this spring will be in the direction of the dotted arc H, causing the tool to dip deeper into the work in proportion as the tool point is set above the work centre line A. Now the amount of tool spring will even under the most rigid conditions vary in a heavy cut with every variation in the depth of cut or in the hardness of the metal. Furthermore, as the cutting edge of the tool becomes dulled from use, its spring will increase, because the pressure required to force it to its cut becomes greater, and as a result when the conditions are such that a perceptible amount of tool spring or deflection occurs, the work will not be turned cylindrically true. Obviously the work under these conditions will be most true when the tool point is set level with the line A, passing through the work axis.

There are two advantages, however, in setting the tool above

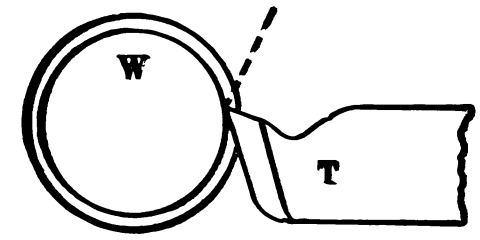

Fig. 950.

the work centre: first it severs the metal easier; and second, it enables the employment of more bottom rake without increasing the bottom clearance.

Thus in Figs. 950 and 951 the diameters of the work W and the top rake of the respective tools are equal, but the tool that is set above the centre, Fig. 950, has more bottom rake but no more clearance, which occurs from the manner in which the cutting edge is presented to the work; the dotted lines represent the line of severance for each, and it is obvious that in Fig. 950, being of the shortest length for the depth of the cut will require least power

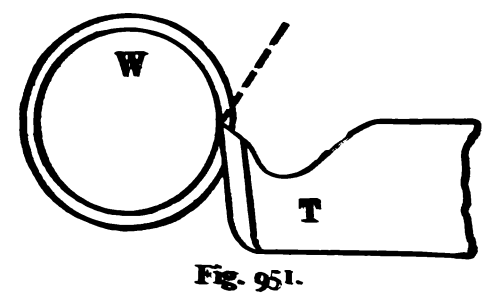

Fig. 951.

to drive, because it is, as presented to the work, the sharpest wedge, as will be perceived by referring to Fig. 952, in which the tool shown in Fig. 950 is simply placed below the work centre, all other conditions as angle, &c., being equal.

From these considerations it appears that while for roughing cuts it is advantageous to set the tool above the centre, it is better where great cylindrical truth is required to set it at the centre for finishing cut.

It may also be observed that if the lathe bed be worn it will usually be most worn at the live centre end, where it is most used, and a tool set above the centre will gradually fall as the cut

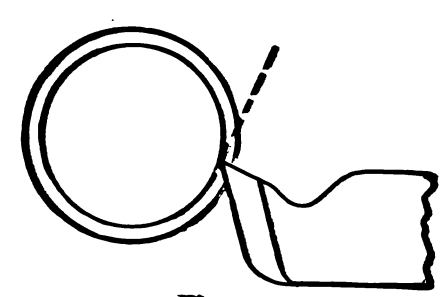

Fig. 952.

proceeds towards the live centre, entering the work farther, and therefore reducing its diameter. This can be offset by setting the tailstock over, but in this case the wear of the work centres is increased, and the work will be more liable to gradually run out of true, as explained with reference to turning taper work. Sir Joseph Whitworth recommends that the tool edge be placed at the "centre" of the work, while at the same time on a line with the middle of the body of the steel. To accomplish this result it is necessary that the form of the tool be such as shown in Fig. 953, in which W represents a piece of work, R the slide rest, A the

fulcrum of the tool support, the dotted line the centre of the work, and the arrow the direction in which the tool point would move from its deflection or spring. Now take the conditions shown in Fig. 954, and it will be perceived at once that the least tool deflection will have an appreciable effect in causing the tool point to advance into the work in the direction denoted by the arrow. This would impair the cylindrical truth of the work, because metals are not homogeneous but contain in forged metals seams and harder and softer places, and in cast metals different degrees of density, that part laying at the bottom of the mould being densest (and therefore hardest) by reason of having supported the weight of the metal above it when cooling in the mould.

This brings us to another consideration, inasmuch as supposing the tool edge to be set level with the work centre (as in Figs. 951

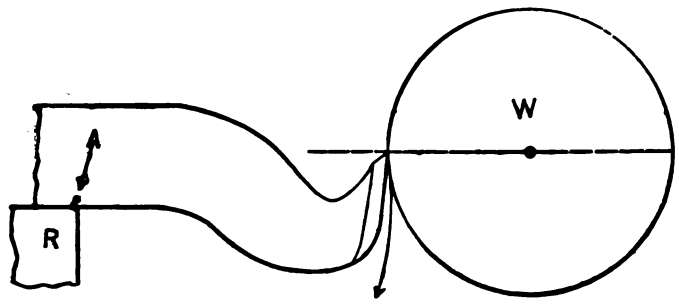

Fig. 953.

and 953), the arc of deflection of the tool point will vary in its direction with relation to the work according to the vertical distance of the top of the tool rest (R in Figs. 953 and 954) from the horizontal centre of the work.

Thus the vertical distance between the point A in Fig. 953 and the work centre is less than that between A and the horizontal work centre in Fig. 954, as may be measured by prolonging the dotted lines in both figures until they pass over A, and then measuring the respective vertical distances between A and those dotted lines. It is to be noted that this distance is governed by the vertical distance of the top of the tool rest R from the work centre, but where this distance is required or desired to be reduced a strip of metal may be placed beneath the tool and between it and the slide rest.

It will now be obvious that to produce work as nearly cylindrical as possible, the tool edge should stand as near to the slide rest

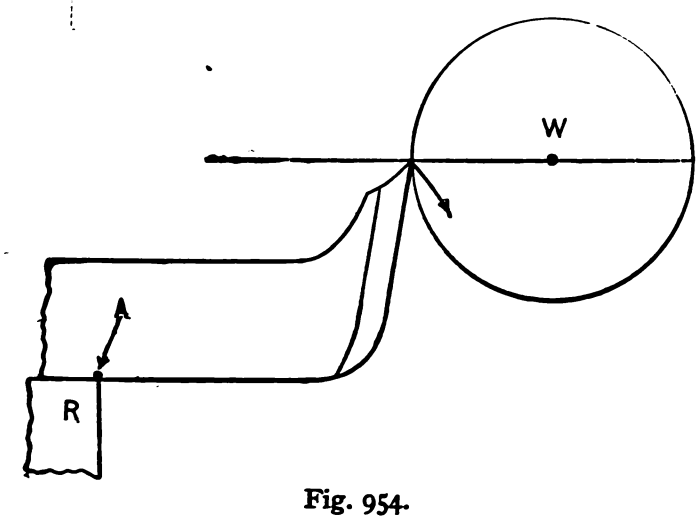

Fig. 954.

as the circumstances will permit, which will hold the tool more firmly and prevent, as far as possible, its deflection or spring from the cut pressure. Both in roughing out and in finishing, this is of great importance, influencing in many cases the depth of cut the tool will carry as well as the cylindrical truth of the work.

We may now present some others of the ordinary forms of tools used in the slide rests on external or outside work, bearing in mind, however, that these are merely the principal forms, and that the conditions of practice require frequent changes in their forms, to suit the conditions of access to the work, &c.

Fig. 955 represents a diamond point tool much used by eastern tool makers. The sides are ground flat and the point is merely oil-stoned to take off the sharp corner. This tool is used with very fine feeds as, say, 180 work revolutions to an inch of tool

traverse, taking very fine cuts, and in sharpening it the top face only is ground; hence as the height of the tool varies greatly before it is worn out, the tool elevating device must have a great range of action.

In Fig. 956 is shown a side tool for use on wrought iron; it is bent around so that its cutting edge A may be in advance of the side of the steel, and thus permit the cutting edge to pass up into

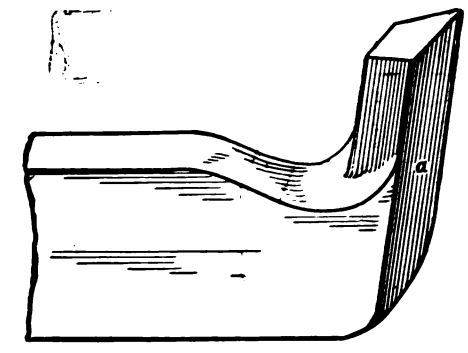

Fig. 955.

a corner. When it is bent to the left as in the figure, it is termed a right-hand side tool, and per contra when bent to the right it is a left-hand tool. The edge A must form an acute angle to edge B, so that when in a corner the point only will cut, or when the edge A meets a radial face, as in Fig. 957, the cutting edge B will be clear of the work as shown.

If the angle of A to B is such that both those edges cut at once, the pressure due to such a broad cutting surface would cause the

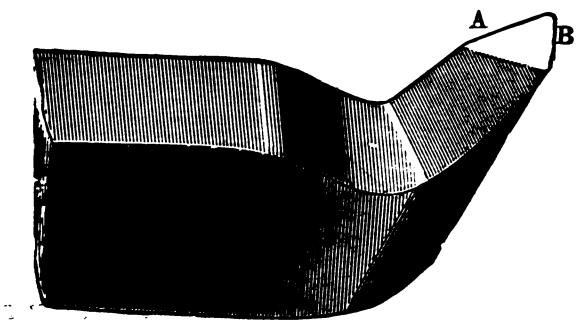

Fig. 956.

tool to spring or dip into the work, breaking off the tool point and perhaps forcing the work from between the lathe centres.

This tool may be fed from right to left on parallel work, or inwards and outwards on radial faces, but it produces the truest work when fed inwards on radial faces, and to the left on parallel work, while it cuts the smoothest in both cases when fed in the opposite direction.

It is a very desirable tool on small work, since it may be used

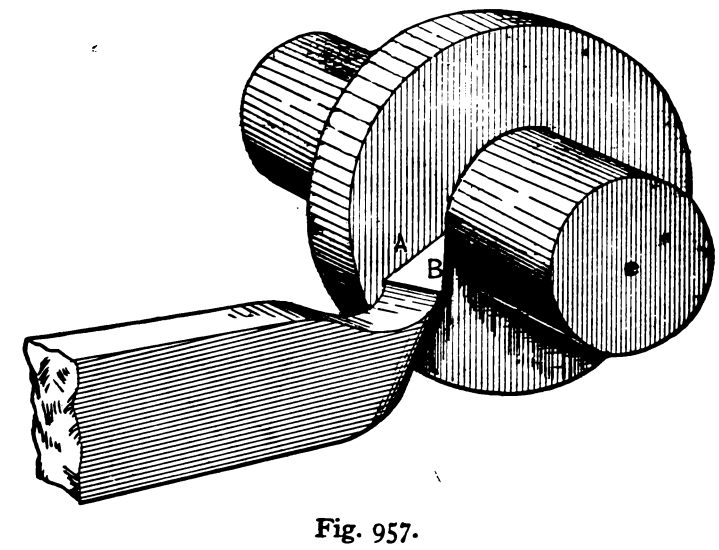

Fig. 957.

on both the stem of the work, and on the radial face, which saves the trouble of having to put in a front tool to turn the stem, and a separate tool for the radial face.

In cutting down a radial face with this tool, it is best (especially if much metal is to be cut off), if the face of the metal is hard, to carry the cut from the circumference to the centre, as shown in the plan view in Fig. 958, in which *a* is the cutting edge of the

tool, B a collar on a piece of work, *c* the depth of the cut, and D a hard skin surface. Thus the point of the tool cuts beneath the hard surface, which breaks away without requiring to be actually cut.

Fig. 959 represents a cutting off or parting tool for wrought iron,

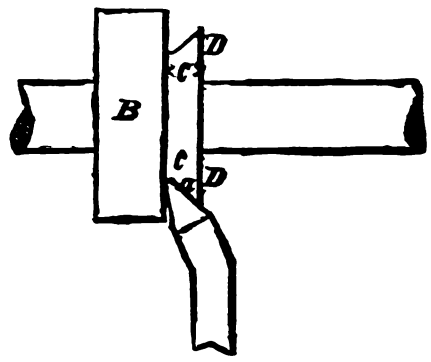

Fig. 958.

its feed being directly into the metal, as denoted by the arrow. This tool should be set exactly level with the work centre when it is desired to completely sever the work. When, however, it is

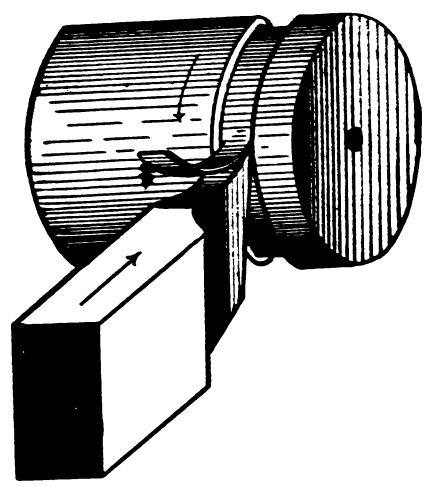

Fig. 959.

used to merely cut a groove, it may be set slightly above the centre.

When the tool is very narrow at *c*, Fig. 960, or long as in Fig.

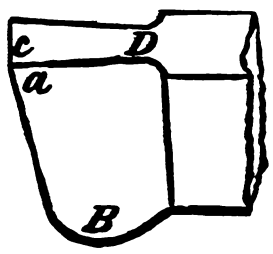

Fig. 960.

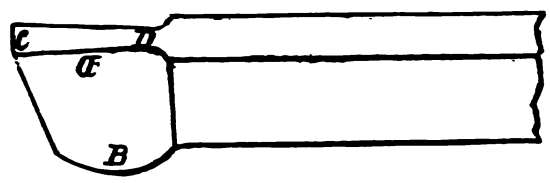

Fig. 961.

961, it may be strengthened by being deepened, the bottom B projecting below the level of the tool steel, which will prevent undue spring and the chattering to which this tool is liable.

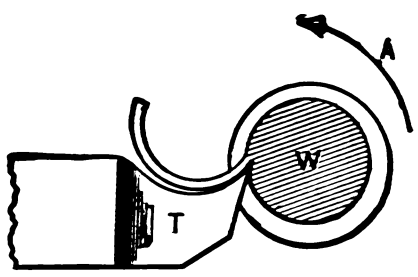

Fig. 962.

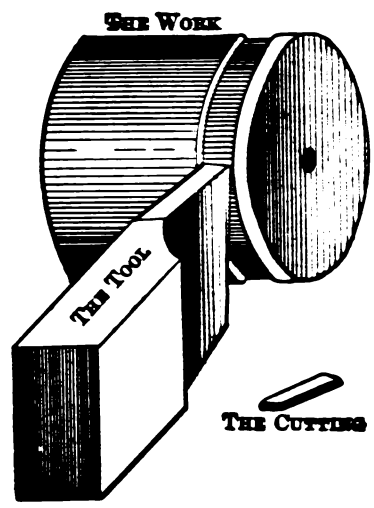

Fig. 963.

To enable the sides of the tool to clear the groove it cuts, the width at *c* should slightly exceed that at D, and the thickness along the top *a* should slightly exceed that at the bottom B.

When the tool is used to cut a wide groove as, say, $\frac{3}{8}$-inch wide, in a small lathe, it is necessary to carry down two cuts, making the tool about $\frac{1}{4}$ inch wide at *c*, which is a convenient size, affording sufficient strength for ordinary uses.

When used on wrought iron the top face may, with advantage, be given top rake as in Fig. 962, which on account of causing the

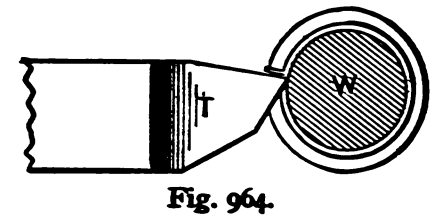

Fig. 964.

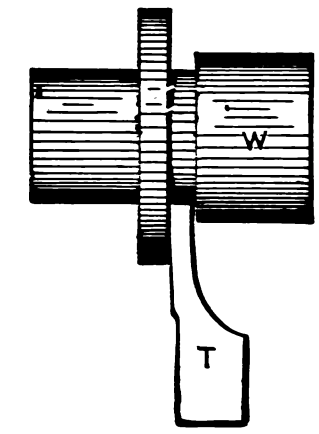

Fig. 965.

tool to cut easier, will reduce the spring of the work W in the direction of arrow A. For brass work, however, the top should be ground in an opposite direction, as in Figs. 963 and 964, which will enable it to cut smoother and with less liability to rip into the metal, especially if the tool requires to be held far out from the

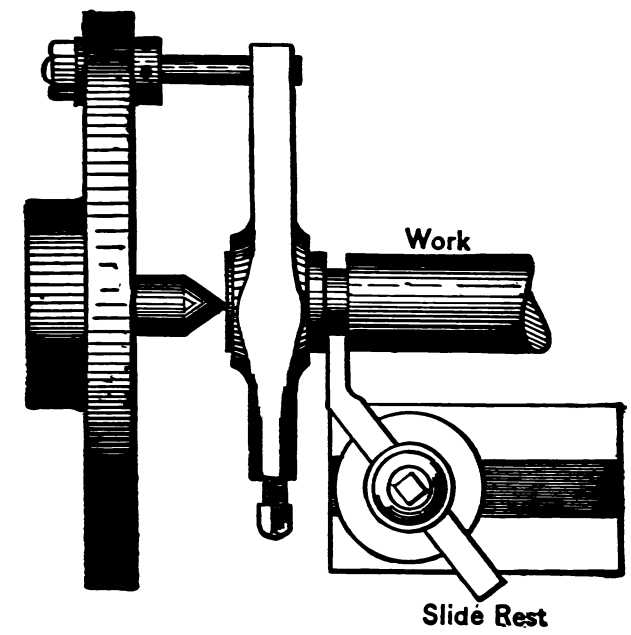

Fig. 966.

tool post. To capacitate the tool to cut a groove close up to a shoulder, it should be forged to the shape shown in Fig. 965. As it is very subject to spring, it should not, unless the conditions are such as to give rigidity to both the work and the tool, be set above the work centres.

When a grooving or parting tool is to be used close up to the

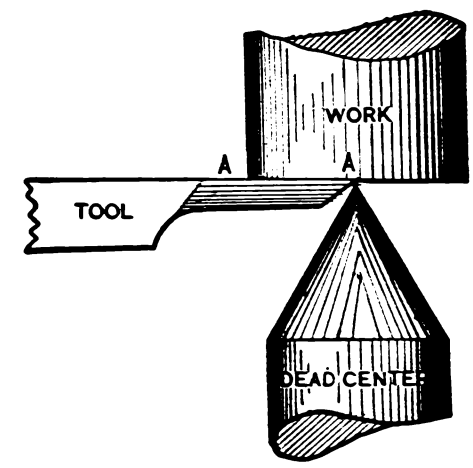

Fig. 967.

lathe dog, its cutting end may be bent at an angle, as in Fig. 966, so that it may be adjusted on the lathe rest, so that the work driver will not strike against the slide rest.

In Figs. 967, 968, and 969, are represented the facing tool, side

tool, or knife tool, as it is promiscuously termed, which is sometimes made thicker at the bottom as in Fig. 969. It is mainly used for squaring up side faces, as upon the ends of work or the sides of heads or collars. A is the cutting edge which may be ground so as to cut at and near the end, for large work in which it is

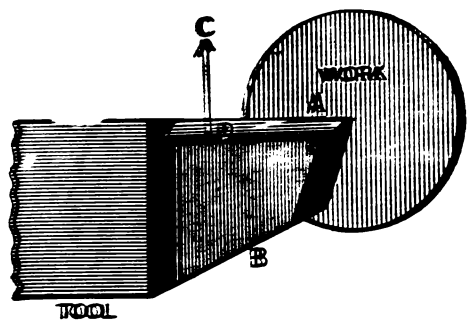

Fig. 968.

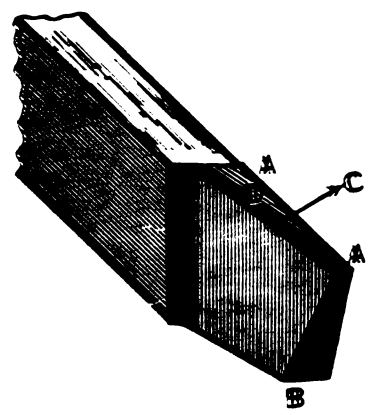

Fig. 969.

necessary to feed the tool in with the cross slide, or to cut along its full length for small work in which the longitudinal feed is used. To facilitate the grinding, the bottom may be cut away, as at B in Fig. 968.

In some practice the bottom B, Fig. 969, of the tool, is made thicker than the top A, which is, however, unnecessary, unless for

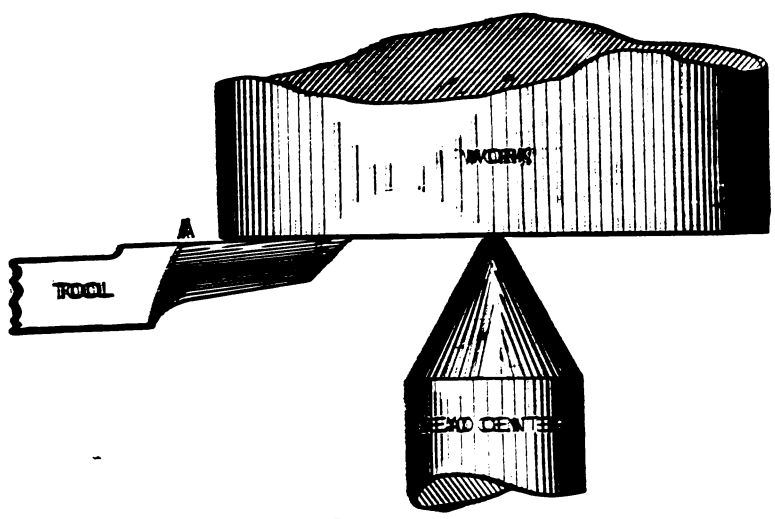

Fig. 970.

heavy cuts, for which the tool would be otherwise unsuitable on account of weakness. For all ordinary facing purposes, it should be made of equal thickness, which will reduce the area to be ground in sharpening the tool.

On small work the edge A A should be ground straight, and set at a right angle to the work, so that it may face off the whole

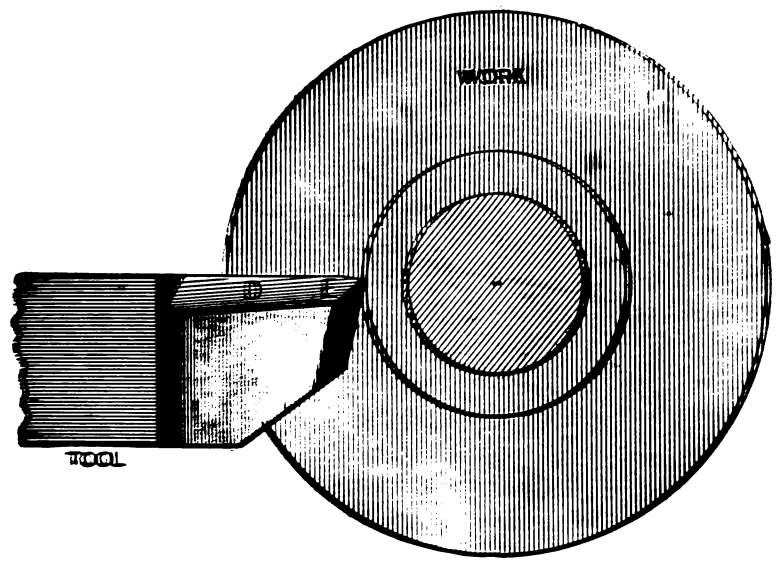

Fig. 971.

surface at once, but for work of large diameter it should be ground and set as in Figs. 970 and 971, so that it will cut deepest at the end E, enabling it to carry a finishing cut from the circumference to the centre, by feeding it with the cross-feed screw.

The cutting edge should be level with the centre of the work, the angle of the top face D being about 35 degrees in the direction of the arrow C for wrought iron, and level if used for brass. When this tool is to be used for a face close to the work driver it should be bent at an angle as in Fig. 972, so as to enable the

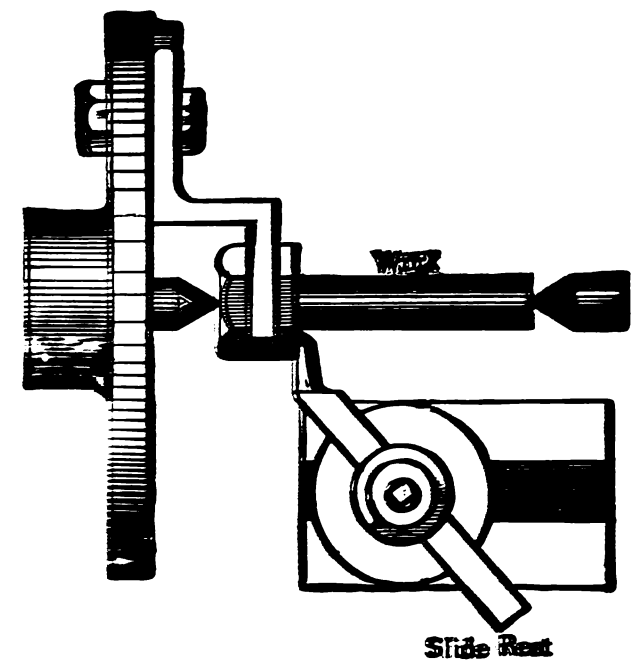

Fig. 972.

driver to clear the slide rest, and when used for countersunk head bolts, it may be bent at an angle as in Fig. 973, so that when it is once set to give the head the correct degree of taper, it will turn successive heads to the correct taper without requiring each head to be fitted to its place.

In Fig. 974 is shown the spring tool which is employed to finish smoothly round corners or sweeps, which it will do to better

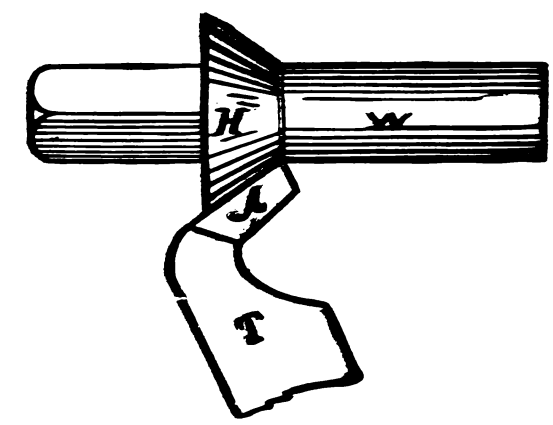

Fig. 973.

advantage than any other slide rest tool, because it is capable of carrying a larger amount of cutting edge in simultaneous operation. This property is due to the shape of the tool, the bend or curve serving as a spring to enable the tool to bend rather than dig into the work.

This form of tool is sometimes objected to on the ground that it does not turn true, but this is not the case if the tool is properly formed and placed at the correct height with relation to the work.

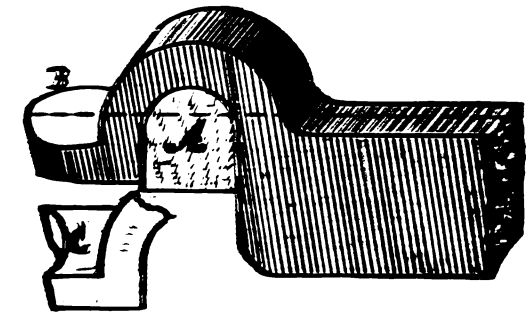

Fig. 974.

In the first place the top face should, even on wrought iron, have but very little top rake, and indeed none at all if held far out from the tool post, while for brass, negative top rake may be employed to advantage. The height of the cutting edge B should be level with the top of the tool steel as denoted by the dotted line in the figure, and in no case should it stand above that level. The

cutting edge should be placed about level with the horizontal centre of the work, but in no case above it. It is from this error that the tool is frequently condemned, because if placed above, the broad cutting edge causes the tool to spring slightly and dig into the metal, whereas when placed at the middle of the height of the work the spring will not have that effect, as already explained when referring to front tools. Furthermore, the spring of the tool (from inequalities in the texture or from seams in the metal) will be in a line so nearly coincident with the work surface that the latter will be practically true, and from the smoothness and the evenness of the curve this tool will produce a much better work than any other tool, unless indeed the curve be of a very small radius, as, say, about $\frac{1}{4}$ inch only, in which case a hand

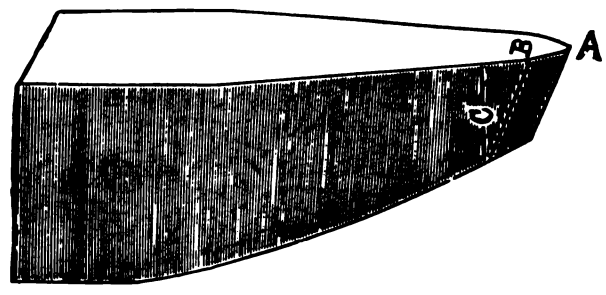

Fig. 975.

tool such as shown in Fig. 1292 may be employed; spring tools are intended to finish only, and not to rough out the work.

The curves, as B in Fig. 974 for a round corner and C for a bead, should be carefully and smoothly finished to the required curve and the top face only ground to sharpen the tool, so as to maintain the curve as nearly as possible; but if the curve is a very large one, the tool will require to be a part of the curve only, and must be operated by the slide rest around the curve.

For finishing the curves or round corners in cast-iron work the spring tool is especially advantageous, as it will produce a polished clean surface of exquisite finish if used with water, and the cutting speed is exceedingly slow, as about 7 feet per minute.

Lathe Slide Rest Tools for Brass Work.

Nearly all the tools used in the slide rest upon iron work may be employed upon brass work, but the top faces should not have rake, that is to say, they should have their top faces lying in the same plane as the bottom plane of the tool steel which rests on

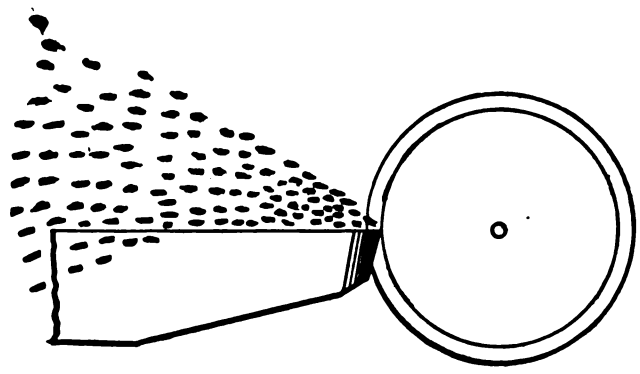

Fig. 976.

the slide rest. For if the top face is too keen it rips rather than cuts the brass, giving it a patchy, mottled appearance.

Fig. 975 represents a front tool for brass, which is used for carrying cuts along outside work or for facing purposes, corresponding, so far as its use is concerned, to the diamond point or front tool for iron. The top face of this tool must in no case be given rake of any kind, as that would cause it to tear rather than to cut the metal, and also to chatter. The point A should be slightly rounded and the width at B and depth at C must be regulated to suit the depth of cut taken, the rule being that slightness in either of these directions causes the tool to chatter. When held far out from the tool post or under other conditions in which the tool cannot be rigidly held, the top face should be ground away towards the end, thus depressing the point A, after the manner shown with reference to the cutting-off tool for brass in Fig. 963. The manner in which the cuttings come off brass work when a front tool is used, depends upon the hardness of the brass and the speed at which the tool cuts.

In the harder kinds of brass, such as that termed gun metal, composition, or bell metal, the cuttings will fly off the tool in short angular grains, such as indicated in Fig. 976, travelling a yard or two after leaving the tool if a fairly quick cutting speed is used. But if the cutting speed is too slow the cuttings will come off slowly and fly but a few inches. In the softer kinds of brass, such as yellow brass, the cuttings are longer and inclined to form

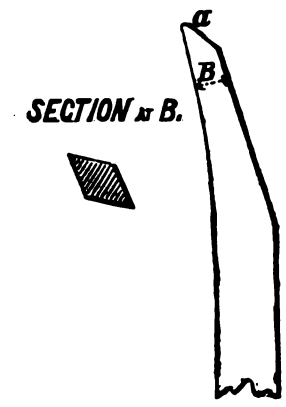

Fig. 977.

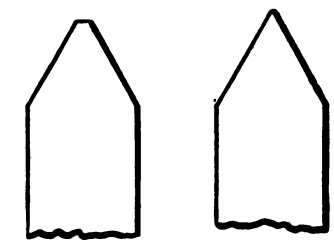

Fig. 978.

short curls, which will, if cut at a high speed, fly a few inches only after leaving the tool.

In Fig. 977 is shown a right-hand side tool for brass work. It is used to carry cuts along short work, and to carry facing cuts at the same time, thus avoiding the necessity to move the position of the tool to enable it to carry a facing cut, as would be necessary if a front tool for brass were used. It is peculiarly adapted, therefore, for brass bolts, or other short work having a head or collar to be faced especially; hence, it may be traversed to its cut in either direction without requiring to be moved in the tool post. It may also be used to advantage for boring purposes. It will be found that this tool will cut smoother and will be less liable to chatter if its top face is ground slightly down towards the point and if it be not forged too slight either in depth or across B. Its clearance on the side is given by forging it to the diamond shape shown in the sectional view. To make the tool a left-handed one it must be bent to the right, the clearance being in any case on the inside of the curve.

The forms of single-pointed slide rest tools employed to cut V-threads in the lathe are shown in Fig. 978, which represents a tool for external, and Fig. 979, which represents one for an

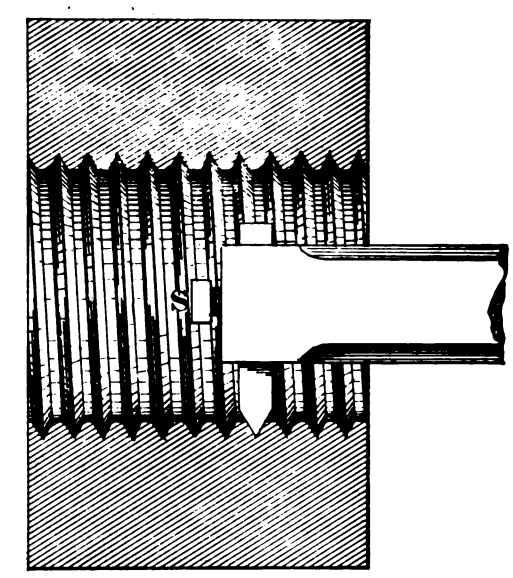

Fig. 979.

internal V-thread, the latter being a tool ground to accurate shape and secured in a holder by the set screw S.

It is obvious that a Whitworth thread might be cut with a single-pointed tool such as shown in Fig. 980, the corner at B being rounded to cut the rounded tops of the thread. It is more usual, however, to employ a chaser set in the tool point in the same manner as a single-pointed tool, or in a holder fixed in the tool post. When a single-pointed tool is employed to cut a thread, the angles of its sides are not the same as the angle of the thread it produces, which occurs because the tool must have clearance to enable it to cut. In Fig. 981, for example, is a single-pointed

tool without any clearance, and, as a result, it cannot enter the work to cut it. In Fig. 982 the tool is shown with clearance, and, as a result, the angle of the cutting edge is not the same angle as the sides of the tool are, because the top face is not at a right angle to the sides of the tool. It is obvious that the angle of the sides of the tool must be taken along the dotted line in Fig. 982.

It follows then that a tool whose sides are at a given angle will cut a different angle of thread for every variation in the amount

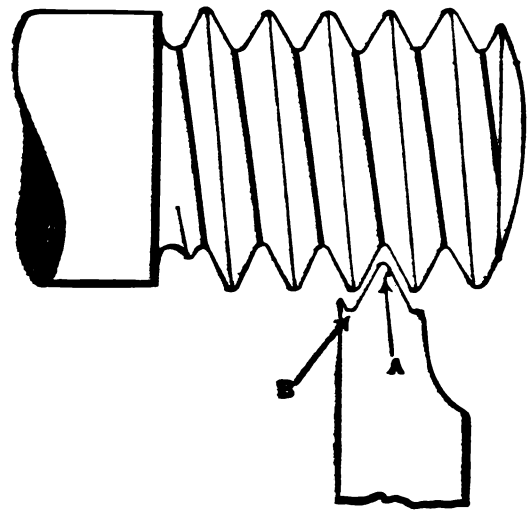

Fig. 980.

of clearance. But whatever the amount of clearance may be, the tool will produce correct results providing that the gauge to which the tool is ground is held level, as in Fig. 983 at A, and not at an angle as at B.

The tool, however, must be set at the correct height with relation to the work, and its top surface must point to the work axis to produce correct results.

Suppose, for example, that in Fig. 984 A is a piece of work, its

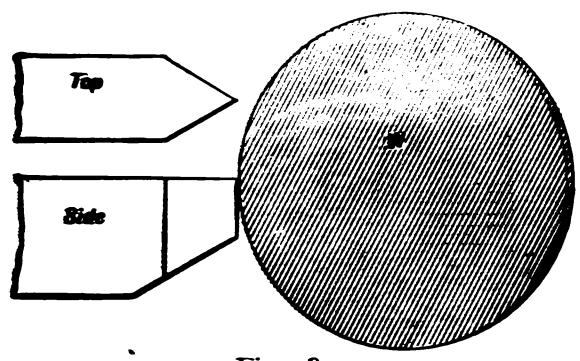

Fig. 981.

horizontal centre being represented by the dotted line C, and its centre of revolution being at C. Now suppose D is a screw-cutting tool cutting a depth of thread denoted by E. G is another lathe tool having teeth of the same form and angle as D, but lifted above the horizontal centre of the work. The depth of thread cut by G is denoted by F, which is shallower, though it will be seen that the point of G has entered the work to the same depth

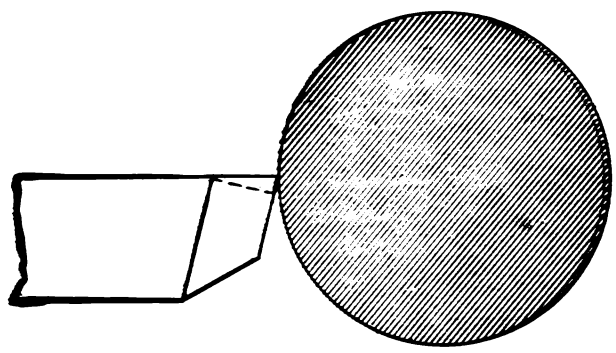

Fig. 982.

or distance (of the tool point) as D has. It is obvious, however, that for any fixed height, a tool suitable to cut any required depth or angle can be made, but it would be difficult to gauge when the tool stood at its proper height.

To facilitate setting the height of the tool, a gauge such as shown in Fig. 985 may be used, the height of the line A from the base equalling the height or distance between the top surface of the cross slides and the axial line of the lathe centres. If the lathe, however, have an elevating slide rest, the rest must be set level before applying the gauge. Or in place of using the gauge, the tool stool or tool holder, as the case may be, may be made of

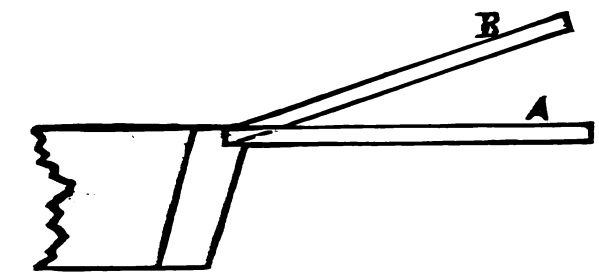

Fig. 983.

such height that when level in the tool post its top face points to the axis of the lathe centre, the tool being sharpened on the angles and not ground on the top face.

But in the case of a tool holder, or of a chaser holder, the tool may be ground on the top face, and adjusted for height by any

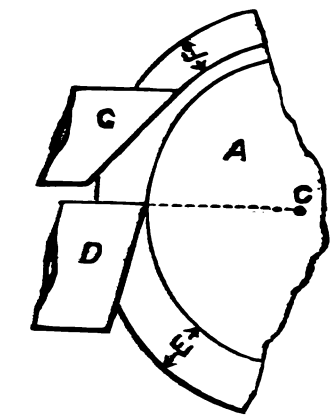

Fig. 984.

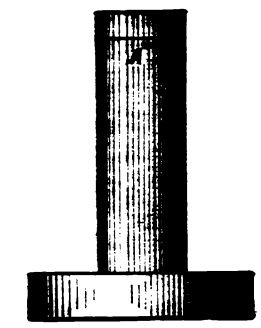

Fig. 985.

suitable means, the top of the holder serving as a guide to set the tool by.

The line of the cutting edge of the tool must, to obtain correct results, be presented to the work in the same manner as it was presented to the gauge to which its angles were ground, so that

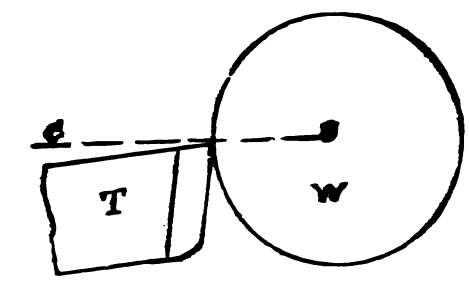

Fig. 986.

if the tool were in position in the tool post, and the gauge were applied, it would point to the axis of the lathe centre, for if this is not the case the thread cut will not be of correct angle or depth. Thus, in Figs. 986 and 987 the tool T would cut threads too shallow, although placed at the correct height, because the cutting edges are at an angle to the radial lines C C.

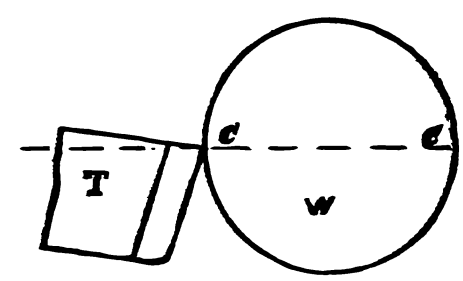

Fig. 987.

It becomes obvious, then, that it is improper to set the height of a screw-cutting tool by means of any tool elevating or setting device that throws it out of the horizontal position. To enable the correct setting of threading tools, and to avoid having to grind the angles correct to gauge every time the tool requires

sharpening, various kinds of tool holders have been designed by means of which the tool may be ground on the top face, and set at correct height and in the proper plane.

To facilitate grinding the tools to a correct angle, the gauge shown in Fig. 988 is employed, the various notches being for the pitches of thread for which they are respectively marked, but, the

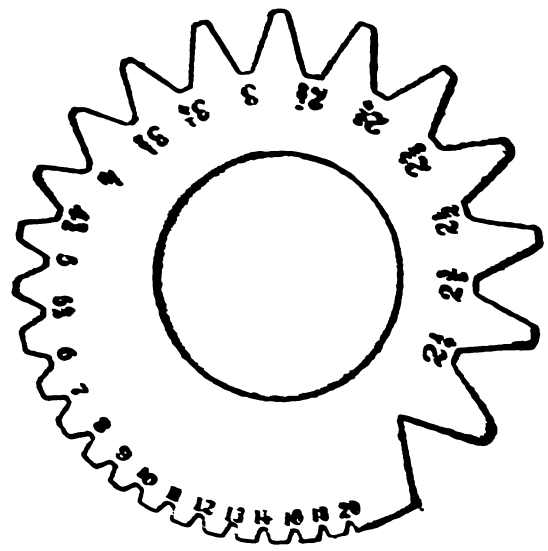

Fig. 988.

edge of the gauge being circular, does not afford much guide to the eye in grinding the angles equal from the sides of the body of the tool; hence the form of gauge shown in Fig. 989 is preferable, because the tool can be so ground that the edge of the gauge stands parallel with the side of the tool steel, so that the tool will, when in correct position, point straight to the work axis. To

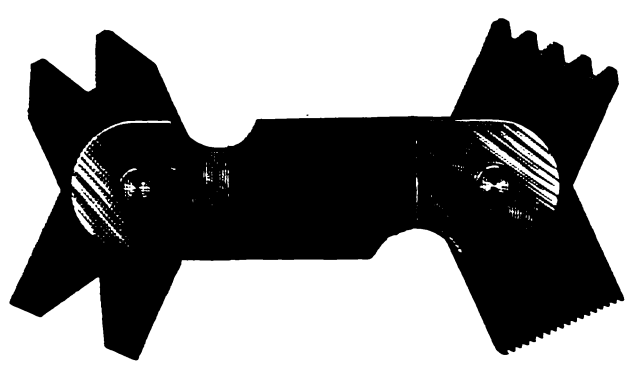

Fig. 989.

insure correctness in setting the tool, it may then be set with a square S in Fig. 990, held firmly with its back against the side of the tool, which may be adjusted in the tool post until the blade B comes fair with the work.

Another method of setting the tool is with a gauge as in Fig. 991, which sets it true with the angle independent of whether the angle is true with the side of the tool or not. In Fig. 992 is a form of gauge that will serve to grind the tool by to correct angle,

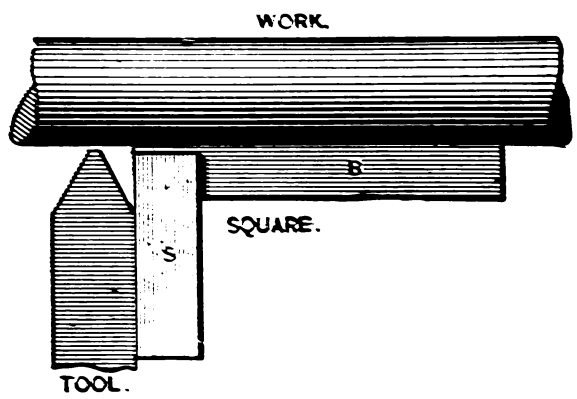

Fig. 990.

and also to set it in the lathe by the angles, independent of the side of the tool.

The same gauge may be used for setting internal threading tools by first facing the work quite true and then applying the gauge as in Fig. 993.

By reason of the comparatively sharp points of thread-cutting tools, they are more readily dulled than the rounder pointed ordinary lathe tool, and by reason of their cutting edges extending along a greater length of the work, and therefore causing it to spring or bend more from the strain of the cut, they cannot be employed to take such heavy cuts as ordinary tools. Hence, in all

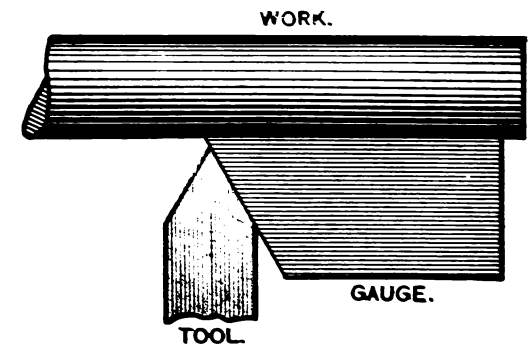

Fig. 991.

thread cutting, it is necessary to turn the work down to the finished diameter before using the threading tool, so that the thread will be finished when it is cut to the proper depth. To test

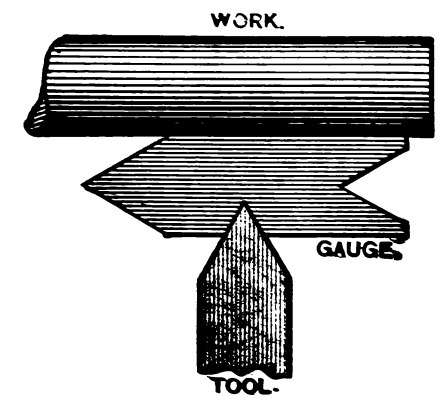

Fig. 992.

that depth on a piece of work having a United States standard, or a sharp V-thread, a gauge such as shown in Fig. 994 may be used, consisting of a piece of sheet steel about $\frac{1}{50}$ inch thick, having a single tooth formed correct for the space of the thread,

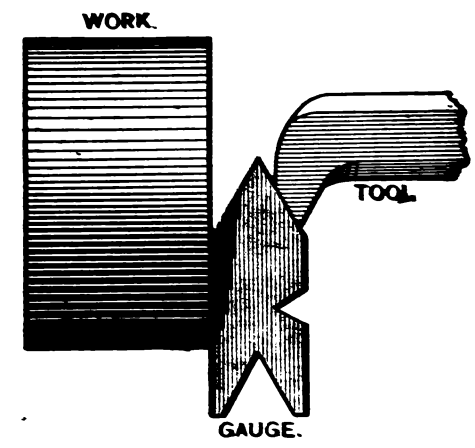

Fig. 993.

so that the edge of the gauge will meet the tops of the thread when the space is cut to admit the tooth on the gauge; the most accurate method of producing such a gauge having been described in the remarks upon screw threads.

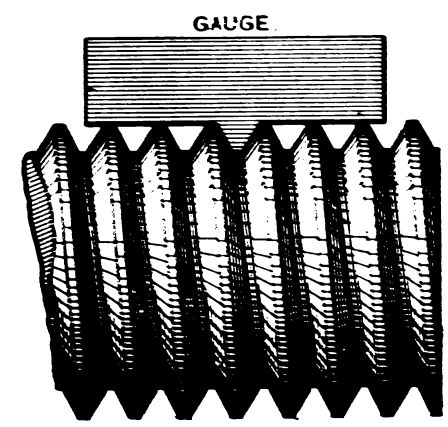

Fig. 994.

If the tool is known to be ground to the correct angle and is set properly, the gauge for depth may be dispensed with by turning the body of the work to correct diameter, and also turning a small

part, as A in Fig. 995, down to the correct diameter for the bottom of the thread, so that when the tool point meets A the thread will be cut to correct depth.

Figs. 996 and 997 represent a method of cutting a round top and bottom, or any other form of thread, by means of a single-pointed circular cutting tool, which is mounted on a holder. On

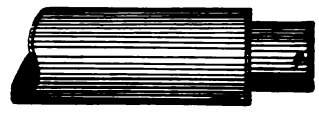

Fig. 995.

the circumference of the cutter is cut a single thread, and a piece is cut out at E to form a cutting edge. To cut a right-hand thread on the work, a left-hand one must be cut on the cutter, so as to make its thread slant in the proper direction. The tool is sharpened by grinding the top face, and moved on the holding

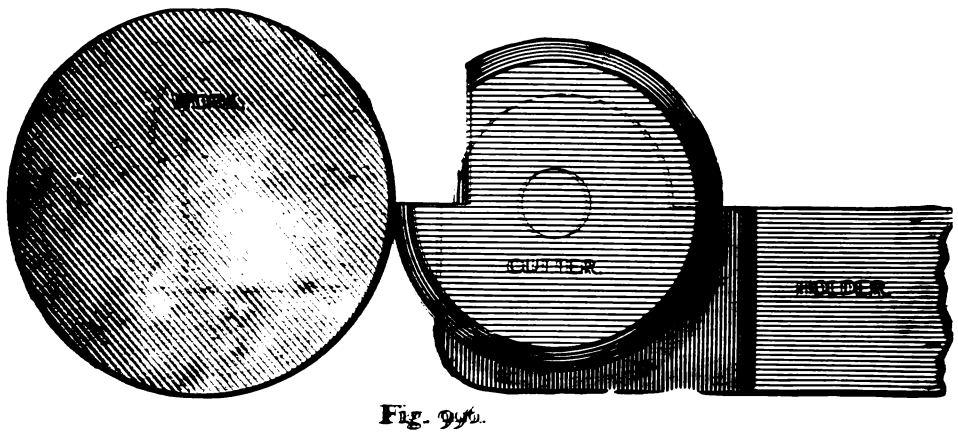

Fig. 996.

pin to set it to the proper height or in position to enable it to cut. A top view of the tool and holder is shown in figure 997.

It is obvious that two gaps may be cut in the wheel or cutter so as to provide two cutting edges, one of which may be used for roughing, and the other for finishing cuts.

In roughing out coarse threads, a single-pointed tool, formed as in Fig. 998, and set considerably above the centre as shown, may

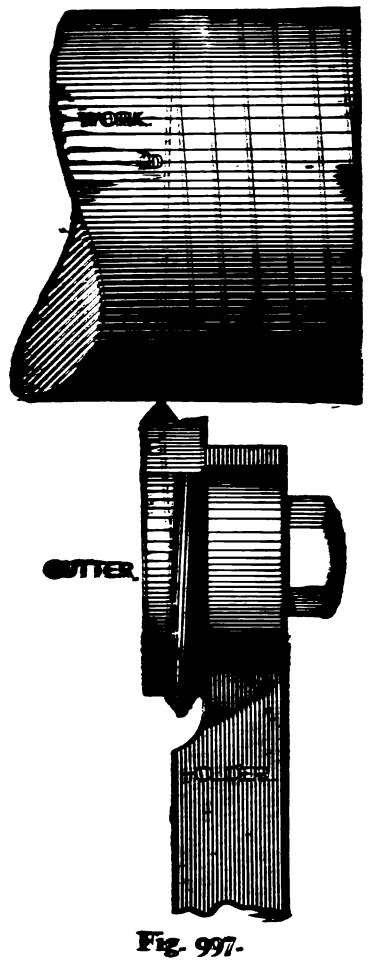

Fig. 997.

be used to great advantage. It will carry a heavy cut and throw off a cutting but very little curved; hence but little power is absorbed in bending the cutting. To preserve the cutting edge, the point of the tool should be slightly rounded. Such a tool, however, requires to be rigidly held, and requires experience to use it to the best advantage.

An English tool holder for a single-pointed tool for cutting coarse pitch threads, such as square threads, is shown in Fig. 999.

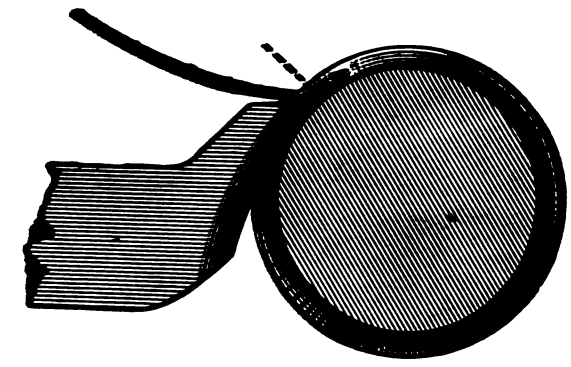

Fig. 998.

The stem of the holder is cylindrical, and is held between two clamping pieces, while the short piece of steel used as a tool (which is thinnest at the bottom, so as to provide for the clearance without grinding it) is clamped in a swiveled post, so that it may be set at the angle sideways required for the particular pitch of thread to be cut, as is shown in the end view.

The difficulty of adjusting the height of threading tools that

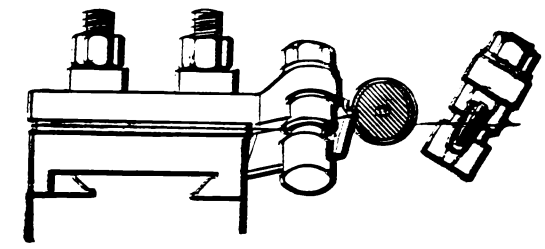

Side View. End View.

Fig. 999.

are ground on their top faces to sharpen them is obviated in a very satisfactory manner by the tool holder patented by the Pratt and Whitney Company, and represented in Figs. 1000 and 1001. A is the body of the holder, C is the tool clamp, and B the set screw for C; D is a pin fast in A and projecting into C to adjust it

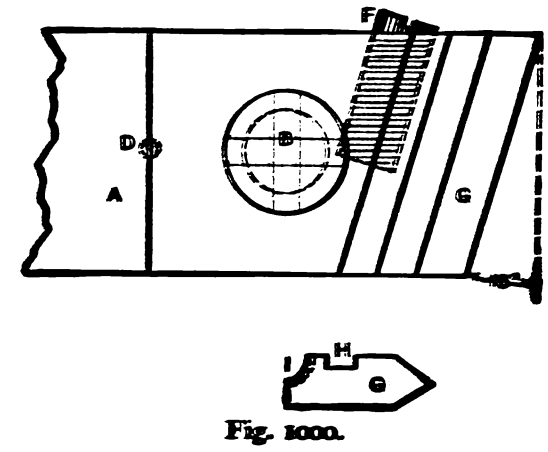

Fig. 1000.

square upon A. The threading tool G has a groove H, into which the projection E fits, so that the tool is held accurately in position. F is the screw which adjusts the height of the tool, being threaded into A and partly into G, as is shown at I. The holder once being

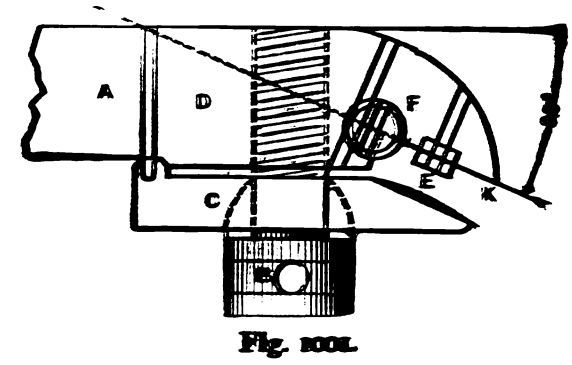

Fig. 1001.

set in correct position, the threading tool may be removed for grinding, and reset with accuracy. The face K of the holder is made at 30° to the front or leading face of the holder, so that the stem or body of the holder will be at an angle and out of the way of the work driver.

If a chaser instead of a single-pointed tool be used to cut a thread, the thread requires to be gauged for its full diameter only, because both the angles of the thread sides and the thread depth are determined by the chaser itself. Chasers are also preferable to a single-pointed tool when the work does not require to be cut to an exact diameter, nor to have a fully developed thread clear up to a shoulder; but when such is the case a single-pointed tool is preferable, because if the leading tooth should happen to

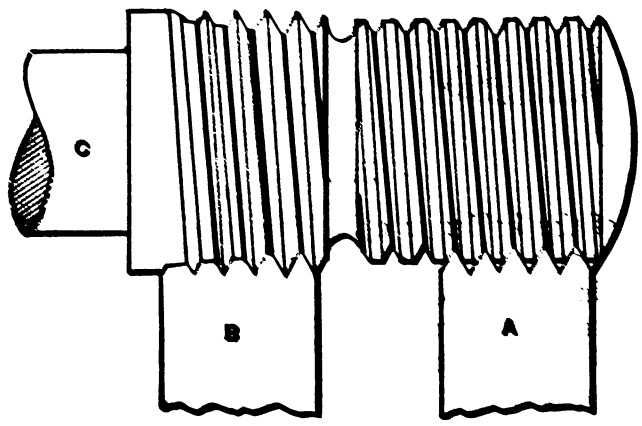

Fig. 1002.

run against the shoulder the whole of the teeth dig into the work, and more damage is done to it than with a single-pointed tool. When the thread does not run up to a shoulder, or in cases where the thread may be permitted to run gradually out, and, again, where the thread is upon a part of enlarged diameter, a chaser may have its efficiency increased in two ways, the first of which is shown in Fig. 1002. When the chaser is set and formed as at A in the figure, the leading tooth takes all the cut, and the following tooth will only cut as it is permitted to do so from the wear of the

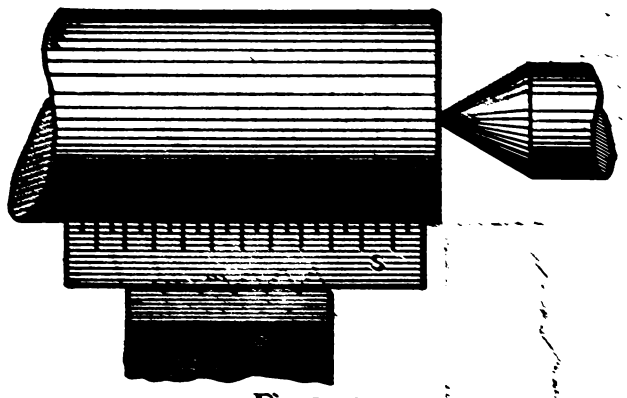

Fig. 1003.

leading bolt. This causes the tooth to wear, but the teeth may be caused to each take a proportion of the cut by chamfering them as at B in the figure, which will relieve the front tooth of a great part of its duty and let the following teeth perform duty, and thus preserve the sharpness of the cutting edges. We are limited in the degree of chamfer that may be given to the teeth, first, because as the cutting edge is broader and the strain of the cut is greater it causes the tool to spring or bend more under the

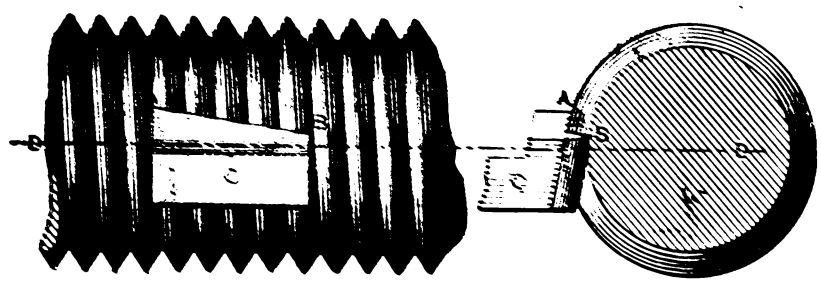

Fig. 1004.

cut pressure; and secondly, because if the tool be given many teeth in order to lengthen the chamfer, then the pitch is altered to a greater extent by reason of the expansion which accompanies the hardening of the chaser.

A chaser thus chamfered may be set square in the tool post by placing a scale against the work as at S in Fig. 1003, and setting the bottoms of the chaser teeth fair with the outer edge of the scale as in the figure.

The second method of increasing the efficiency of a chaser is to grind the top face at an angle as from A to B in Fig. 1004, and set it so that the last tooth B is at or a little above the work axis D. This causes the last tooth B to stand sufficiently nearer the work axis than the other teeth to enable it to take a light scraping cut, producing a smooth cut, because the duty on the last tooth being light it preserves its cutting edge, and therefore its form.

Chasers are often in shops, doing general work, formed in one piece in the same way as an ordinary tool, but it is preferable to use short chasers and secure them in holders.

Figs. 1005 and 1006 show a convenient form of holder, the chaser A being accurately fitted into a recess in the holder D, so

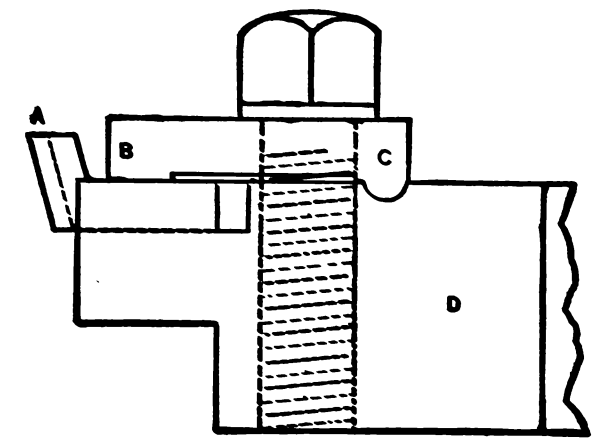

Fig. 1005.

that it may be set square in the holder without requiring to be adjusted to come fair with the thread grooves after having been ground to resharpen it. The short chasers are held by the clamp B, which has at C a projection fitting into a recess in the holder to cause the clamp to adjust itself fairly.

In setting a chaser to correct position in a tool post the points of the teeth may be set to the surface of the work as in Fig. 1007, or if the thread is partly produced and the lathe has a compound slide rest, the tool may be set to the tops of the thread as in Fig. 1008, and then brought into position to meet the thread grooves by operating the slide rest.

It is obvious that the height and position of a chaser require to be as accurately set as a single-pointed tool, but it is more

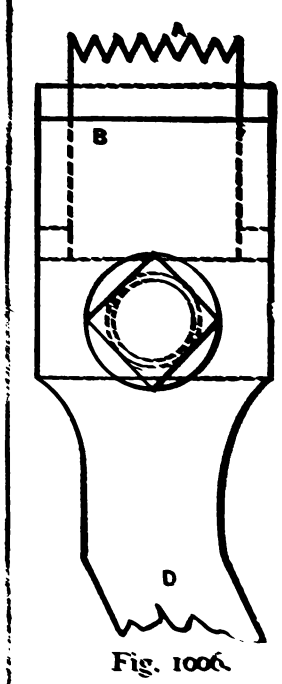

Fig. 1006.

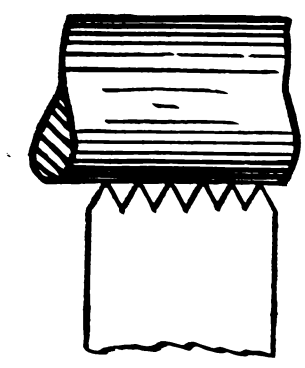

Fig. 1007.

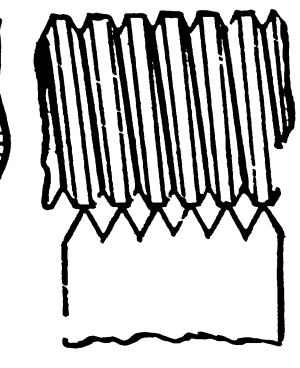

Fig. 1008.

difficult to set it because it can only be sharpened by grinding the top face, and this alters the height at each grinding.

Thus, suppose that when new its teeth are of correct height, when the bottom face I, Fig. 1009, lies upon the rest R, the face H being in line with the centre B B of the work, then as face H is ground the tool must be lifted to adjust its height. On account, however, of the curve of the teeth it is very difficult to find when the chaser is in the exact proper position, which in an ordinary chaser will be when it has just sufficient clearance to enable it to cut, as is explained with reference to cutting up chasers and using them by hand.

To obviate these difficulties, an excellent form of chaser holder is shown in Figs. 1010 and 1011. Its top face C being made of such a height that when the holder rests on the surface of the slide rest and is in the tool box, C will stand horizontally level with the horizontal centre of the work, as denoted by the horizontal line D E; then the tool proper may have long teeth as denoted by A, and the surface of the teeth may always be brought up level with the top surface of the tool holder as tested with a

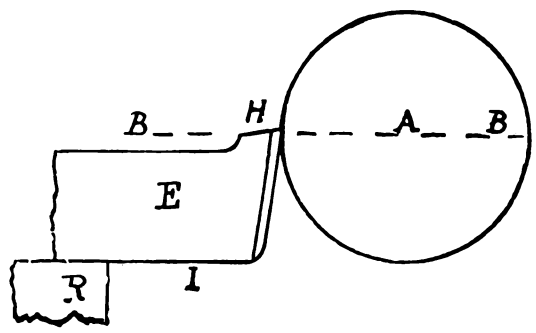

Fig. 1009.

straight-edge. This is a ready and accurate mode of adjustment. A top view of the tool holder is shown in Fig. 1011, in which A is the tool holder, B the threading tool, with a clamp to hold B, and a screw to tighten the clamp.

It may now be pointed out that a common sharp V-chaser may be used to cut a United States standard thread by simply grinding off the necessary flats at the points of the teeth, because when the chaser has entered the work to the proper depth it will leave

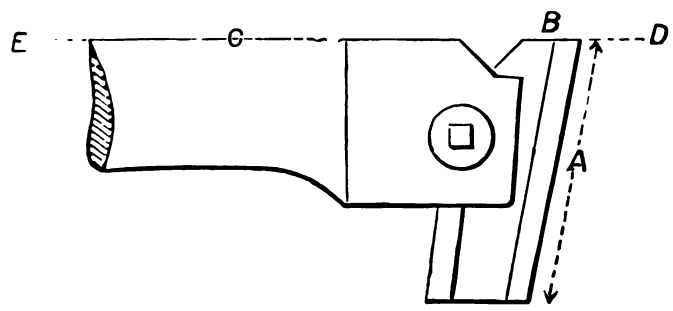

Fig. 1010.

the necessary flat places at the top of the thread, as is shown in Fig. 1012.

In cutting internal, inside, or female threads (these terms being synonymous) the diameter of the bore or hole requires to be made of the diameter of the male thread *at the root*.

Since, however, it is impracticable to measure male threads at the root, it becomes a problem as to the proper size of hole to bore for

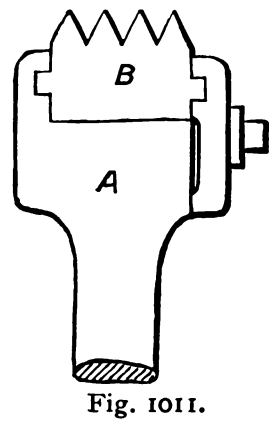

Fig. 1011.

any given diameter and pitch of thread. This, however, may be done by the following rules :—

To find the diameter at the roots or bottom of the thread of United States standard threads :

Rule.—Diameter – (1·299 ÷ pitch) = diameter at root.

Example.—What is the diameter at the root of a United States standard thread measuring an inch in diameter at the top of the thread and having an 8 pitch ?

Here 1·299 ÷ 8 = ·162375.

$$\text{Then } 1 - \cdot 162375 \left(\begin{array}{r} 1\cdot 000000 \\ \cdot 162375 \\ \hline \cdot 837635 \end{array} \right) = \cdot 8376.$$

For the sharp V-thread the following rule is employed :

Rule.—Diameter – (1·73205 ÷ pitch) = diameter at root.

Example.—What is the diameter at the root of a sharp V-thread of 8 pitch, and measuring 1 inch diameter at the top of the thread ?

Here 1·73205 ÷ 8 = ·21650.

$$\text{Then } 1 - \cdot 2165 \left(\begin{array}{r} 1\cdot 0000 \\ \cdot 2165 \\ \hline \cdot 7835 \end{array} \right) = \cdot 7835.$$

For cutting square threads the class of tool shown in Fig. 1013 is employed, being made wider at the cutting point C than at B or at D, so that the cutting may be done by the edge C, and the sides

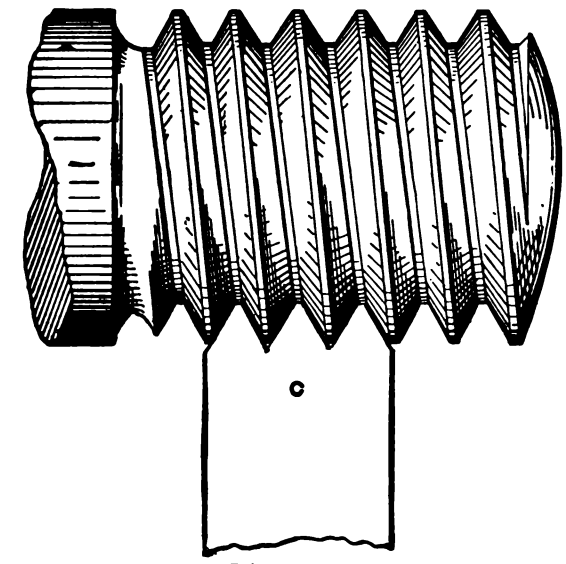

Fig. 1012.

a may clear, which is necessary to reduce the length of cutting edge and prevent an undue pressure of cut from springing the work.

The sides of the tool from *a* to B must be inclined to the body of the tool steel, as shown in Fig. 1014, the degree of the inclina-

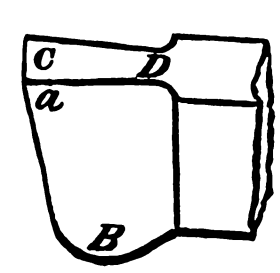

Fig. 1013.

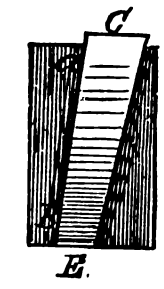

Fig. 1014.

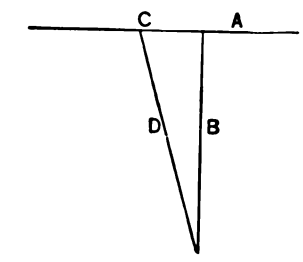

Fig. 1015.

tion depending upon the pitch of thread to be cut. It may be determined, however, by the means shown in Fig. 1015.

Draw the line A, and at a right angle to it line B, whose length must equal the circumference of the thread to be cut and measured at its root. On the line A set off from B the pitch of thread to be cut as at C, then draw the diagonal D, which will represent the

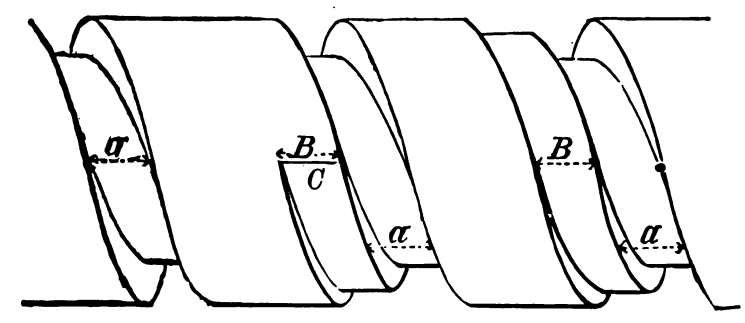

Fig. 1016.

angle of the bottom of the thread to the work axis, and the angle of the tool sides must be sufficiently greater to give the necessary clearance. The width of the point C of the tool should be made sufficiently less than the width of the thread groove to permit of the sides of the thread being pinched (after the thread is cut to depth) with a tool such as was shown in Fig. 968.

For coarser pitches the thread is cut as shown in Fig. 1016.

The tool is made one-half the width of the thread groove, and a groove, *a*, *a*, *a*, is cut on the work. The tool is then moved laterally and a second cut as at B B is taken, this second cut being shown in the engraving to have progressed as far as C only for clearness of illustration. When the thread has in this manner been cut to its proper depth, the side tools are introduced to finish the sides of the thread. If the thread is a shallow one each side

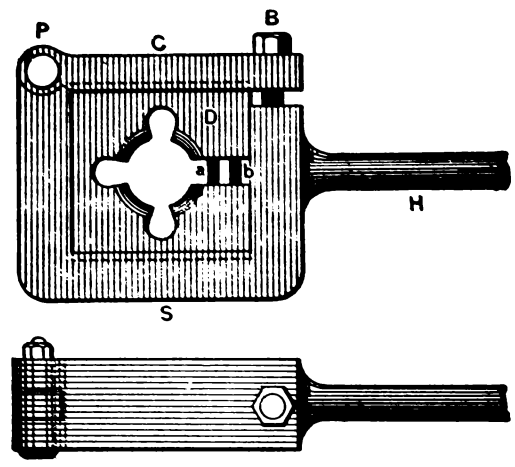

Fig. 1017.

may be finished at one cut by a side tool ground and set very true; but in the case of a deep one the tool may be made to cut at and wear its end only, and after taking a cut, the tool fed in and another cut taken, and so on until, having begun at the top of the thread, the tool operated or fed, after each traverse, by the cross feed, finally reaches the bottom of the thread. If a very fine or small amount of cut is taken, both sides of the thread may

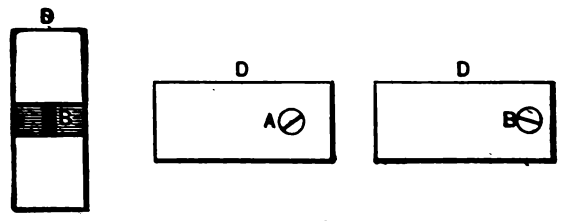

Fig. 1018.

in this way be finished together, the tool being made to the exact proper width.

When used on wrought iron the tool is sometimes given top rake, which greatly facilitates the operation, as the tool will then take a heavier as well as a cleaner cut.

After the first thread cut is taken along the work, it is usual to remove it from the lathe and drill, at the point where it is desired

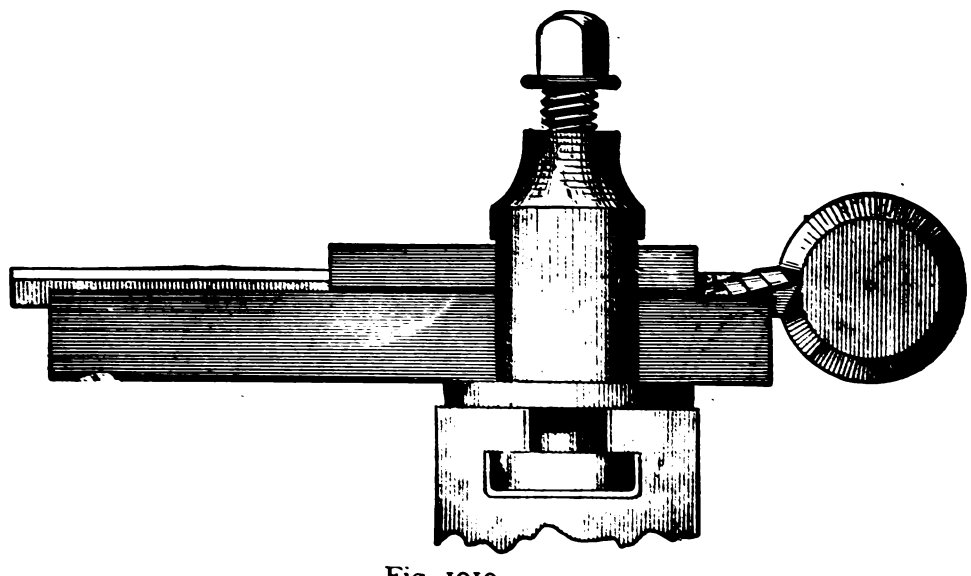

Fig. 1019.

that the thread shall terminate, a hole equal in diameter to the width of the thread groove, and in depth to the depth of the thread. This affords relief to the cutting tool at the end of the cut, enables the thread to end abruptly, and leaves a neat finish.

On account of the broad cutting edge on a screw-cutting tool, the lathe is always run at a slower speed than it would be on the same diameter of work using an ordinary turning tool. After the tool is set to just clear the diameter of the work it is moved (for a right-hand thread) past the end of the work at the dead centre, and a cut is put on by operating the cross-feed screw. The feed nut is then engaged with the feed screw and the tool takes its cut as far along the work as the thread is to be, when the tool is rapidly withdrawn from the work and the lathe carriage traversed back again, ready to take another cut. If, however, the thread to be cut runs close up to a shoulder, head, or collar, the lathe may be run slower as the tool approaches that shoulder by operating the belt shipper and moving the overhead belt partly off the tight

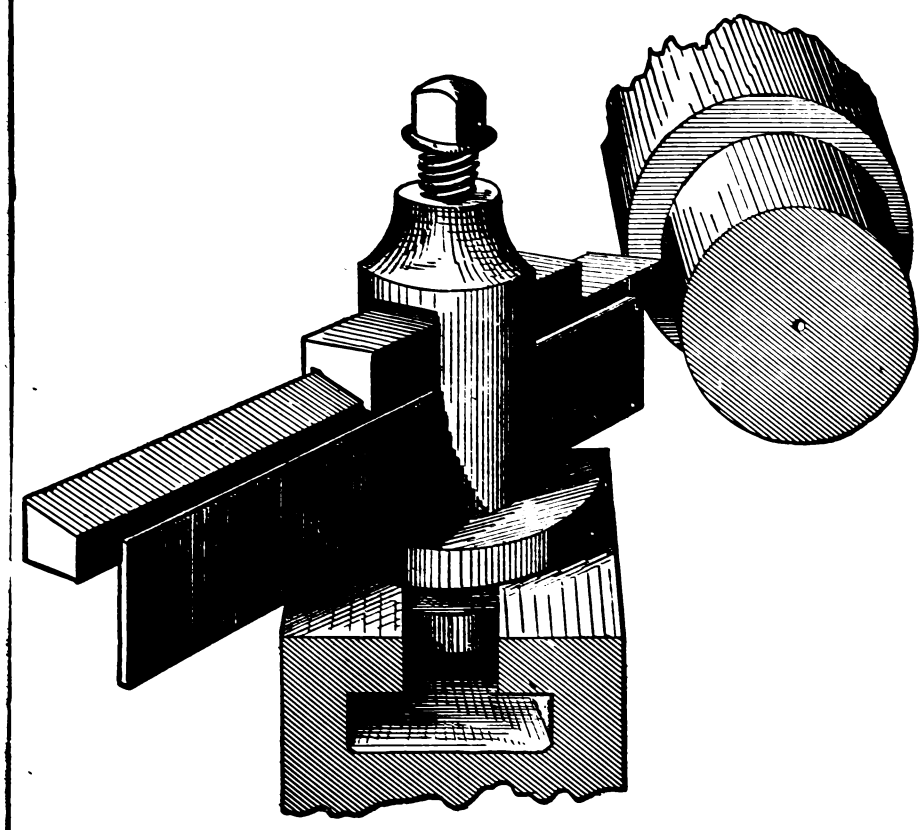

Fig. 1020.

pulley and on to the loose one, or the lathe may be stopped when the tool is near the shoulder and the belt pulled by hand.

An excellent method of finishing square threads after having cut them in the lathe to very nearly the finished dimensions is with an adjustable die in a suitable stock, such as in Figs. 1017 and 1018, in which S is a stock having handle H, and containing a die D, secured by a cap C, pivoted at P. To adjust the size of the die, two screws, *a* and *b*, are used, *a* passing through the top half of the die and threading into the half below the split, while *b* threads into the lower half and abuts against the face of the split in the die, so that, by adjusting these two screws, the wear may be taken up and the size maintained standard. This device is used to take a very light finishing cut only, and is found to answer very well, because it obviates the necessity of fine measurement in finishing the thread. The die D is seated in a recess at the top and at the bottom so as to prevent it moving sideways and coming out.

LATHE TOOL HOLDERS FOR OUTSIDE TOOLS.—When a lathe cutting tool is made from a rectangular bar of steel it requires to be forged to bring it to the required shape at the cutting end, and to avoid this labor, and at the same time attain some other advantages which will be referred to presently, various forms of tool holders are employed.

These holders fasten in the tool post, or tool clamp, and carry short tools, which, from their shapes and the manner in which they are presented to the work, require no forging, and maintain their shapes while requiring a minimum of grinding.

Fig. 1019 represents a side view of Woodbridge's tool holder at work in the lathe, and Fig. 1020 is a view of the same set at an angle to the tool rest. Fig. 1021 is an end view of the tool and holder removed from the lathe.

The tool seat A is at an angle of about 4 degrees to the base of holder (a greater degree being shown in the cut for clearness of illustration), so that the side J of the tool will stand at an angle and have clearance without requiring such clearance to be produced by grinding. The seat B of the cap C upon the tool is curved, so that the cap will bind the middle of the tool and escape

the edges, besides binding the tool fair upon its seat A. The top face is formed at the angle necessary for free and clean cutting, and the tools are, when the cutting edge is provided at one end only, hardened for half their length.

The holder, and therefore the tool, may obviously be swung at any chosen angle of the work or to suit the requirements.

Fig. 1022 shows a right and left-hand diamond-point tool in position in the holder with the cap removed, the cutting edge

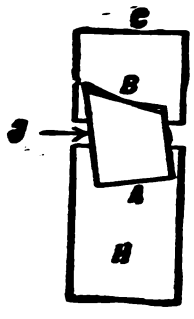

Fig. 1021.

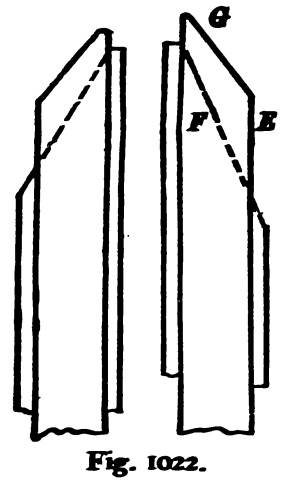

Fig. 1022.

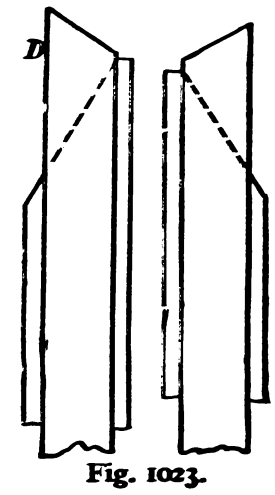

Fig. 1023.

being at G, the angle of the top face being from F to E. The tool, it will be observed from the dotted line, is supported close up to its cutting corner.

Fig. 1023 shows a right and left-hand side tool in position, the dotted line showing that it is supported as close to the cutting edge D as the nature of facing work will permit. When left-hand tools are used the holder is turned end for end, so as to support the tools in the same manner as for right-hand ones, and for this purpose it is that the holder is beveled off at each end.

By grinding both ends of one tool, however, to the necessary shape and angle, one tool may be made to serve for both right and left, the tool holder being simply reversed end for end in the tool post. There are, however, furnished with each holder a right and left-hand diamond point and a right and left-hand side tool, each being hardened for half its full length.

It is obvious, however, that there is no front rake to the tool, and that it therefore derives its keenness from the amount of side rake, which may be regulated to suit the conditions.

When tool holders of this class are employed, the end face only of the tool requires grinding to resharpen the cutting edges; hence the area of metal requiring to be ground is much less than that on forged tools, and therefore the grinding occupies less time; and if the workman grinds the tools, he is enabled to run more lathes and not keep them idle so long while grinding the tool. Or if the tools are kept ground in stock (about 200 of the tools or cutters serving to run 24 lathes a week) the workman has but to slip in a new tool as the old one becomes dull, no adjustment for height being necessary as in the forged tool.

When the tool requires to be set to an exact position, as in the case of screw cutting, it is desirable that the tool holder be so constructed that the tool may be removed therefrom and replaced without disturbing the position of the tool holder in the tool post or tool clamp; and means must therefore be provided for securing the tool to the holder independently of the tool post or clamp screw. Fig. 1024 represents a tool holder possessing these features: H is the holder provided with a clamp C, secured by a screw B, T representing the tool, which is in this case a chaser, having teeth down the full length of its front face; K is a key or feather fast in the holder H, and fitting into a groove provided in the side of the tool. The vertical angle of this feather obviously determines the angle of clearance at which the tool shall stand to the work.

The Pratt and Whitney Company, who are the manufacturers of this holder, make this angle of clearance 15 degrees. The height of the tool in the holder is adjusted by the screw S, which has journal bearing in the holder, and threads to the end edge of the tool.

Now it is obvious that the holder H, once being set to its proper position in the tool post, the tool T may be removed from and replaced in the exact same position, both in the holder and with reference to the work.

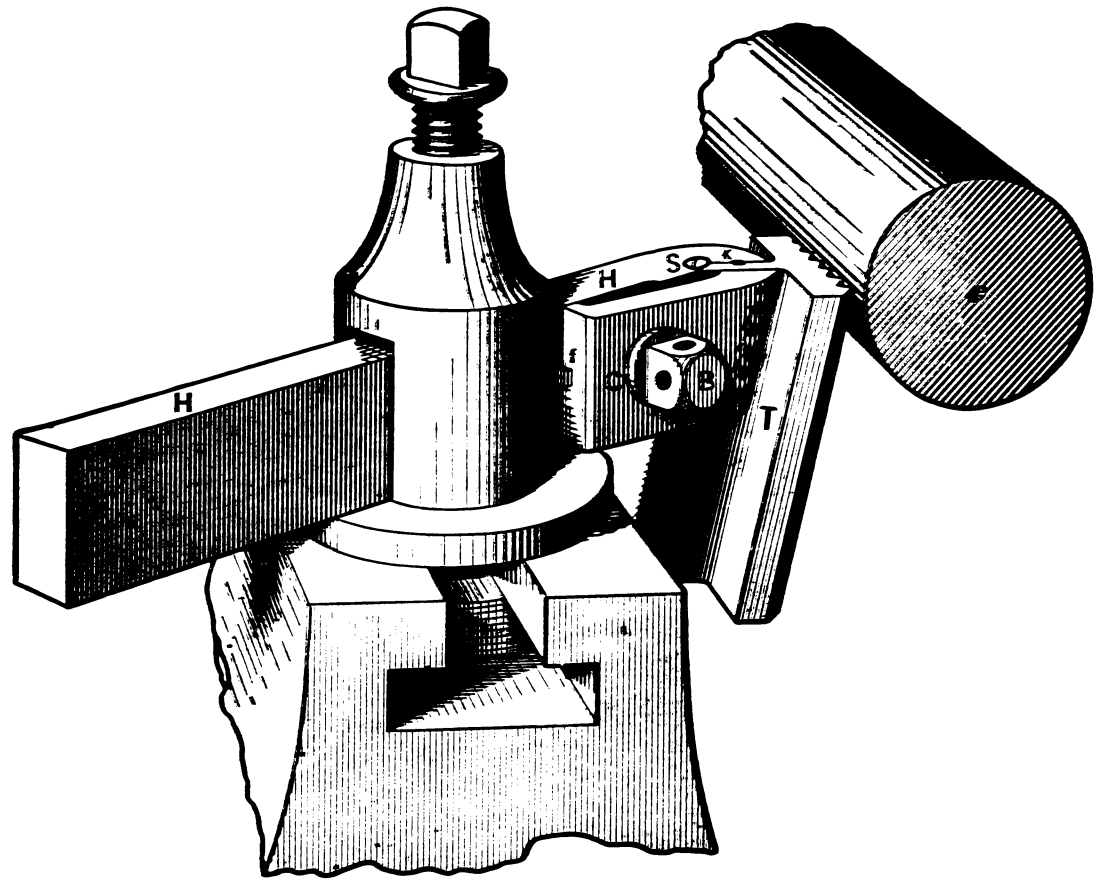

Fig. 1024.

In Fig. 1025, for example, is a top view of the holder with a single-pointed threading tool T in place. W represents a piece of work supposed to be in the lathe, and G a tool-setting gauge; and it is obvious that, if the holder is not moved, the tool T may be removed, ground up, and replaced with the assurance that it will stand in the exact same position as before, producing the exact same effect upon the work, providing that the height is maintained equal, and the tool is not altered in shape by the grinding. To maintain the height equal, all that is necessary is to have the upper face (H, Fig. 1024) of the holder horizontally level and in line with the line of centres of the lathe, and to set the top face of the tool level with that of the holder. In sharpening the tool the top face only is ground; hence the angles are not altered.

Fig. 1026 represents the holder with a tool in position to true up a lathe centre, the angle of the tool holder to the line of centres being the same as in Fig. 1025; and Fig. 1027 represents various forms of tools for curves. All these serve to illustrate the advantages of such a tool holder.

If, for example, a piece of work requires the use of two or more such tools, and the holder is once set, the tools may be removed and interchanged with a certainty that each one put into place

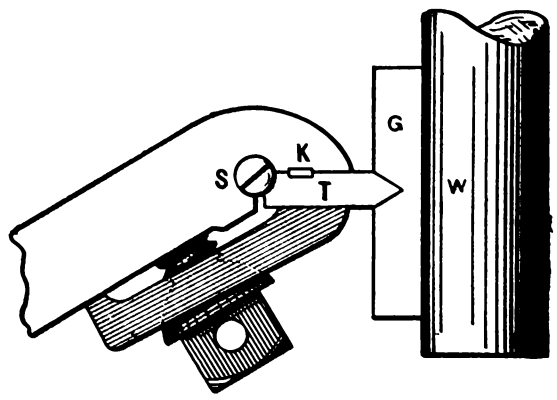

Fig. 1025.

will stand at the exact angle and position required, not only with relation to the work, but also in relation to the other tools that have preceded it. Each hollow or round will not only be correct in its sweep, but will also stand correct in relation to the other sweeps and curves, no matter how often the tools may be changed. Inasmuch as the tool is ground at the top only for the purpose of resharpening, it maintains a correct shape until worn out.

The pin shown at *f* in Fig. 1024 is fast in the holder, and fits

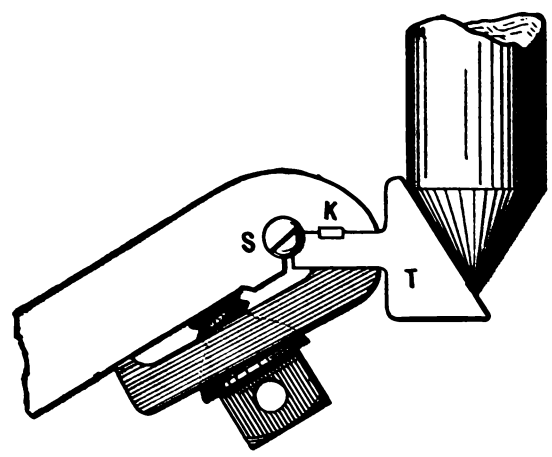

Fig. 1026.

loosely in clamp C to prevent it from swinging around on B when B is loosened.

When the tool requires to preserve its exact shape it may also be made circular with the required form for the cutting edge formed round the perimeter. Thus Figs. 1028 and 1029, which are extracted from *The American Machinist*, represent tool holders with circular cutting tools.

The holder A fits the lathe tool post, carrying the cutting tool B,

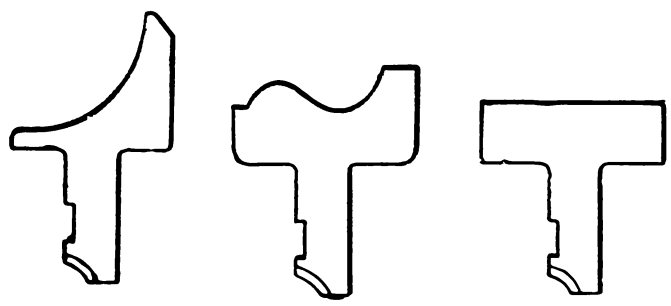

Fig. 1027.

which is bolted to the holder and has at F a piece cut out to form the cutting edge.

To facilitate the grinding, holes are drilled at intervals through B. A plan view of this tool and holder is shown at C, the shape of the cutting edge being shown at D. The cutting edge is shown in the side view to be level with the centre of the tool holder height, but it may be raised to the level of the top of the tool steel by raising the hole to receive the bolt that fastens the cutter, as is shown at E; or the cutter may be mounted on top of the holder as shown at H, having a stem passing down through the holder, and capable of being secured by the taper pin I. A plan view of this arrangement is shown at J.

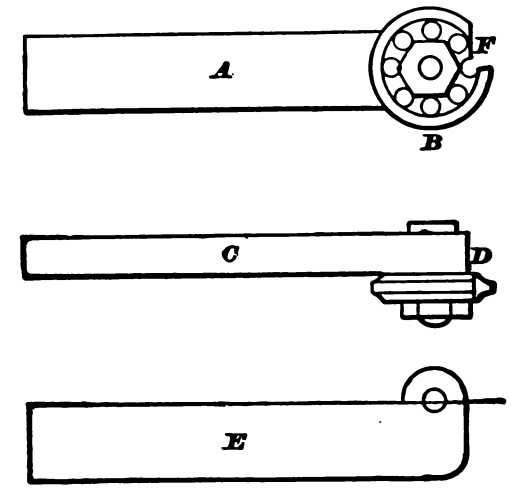

Fig. 1028.

Another form of circular cutter is shown in Fig. 1030. It consists of a disk or cutter secured to a holder fitted to the tool post, the cutter edge being formed by a gap in the disk, as shown in

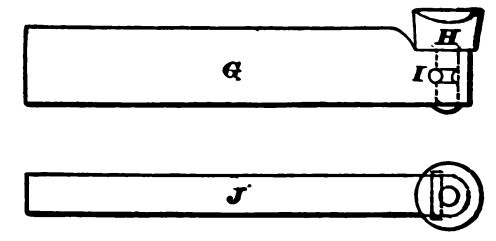

Fig. 1029.

the figure, which represents a cutter for a simple bead or round corner. The front end of the holder has a face A, whose height is level with the line of lathe centre when the holder is set level in

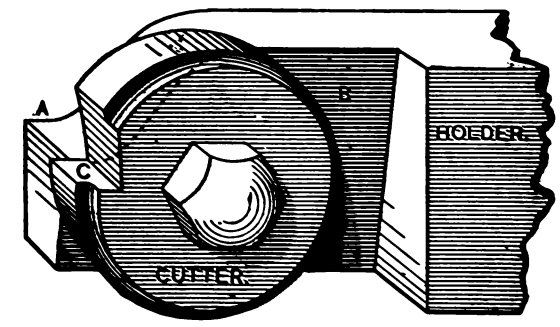

Fig. 1030.

the tool post. Hence the top face of the cutting edge may be known to be set level with the line of centres when it is fair with the face A of the holder. The bottom clearance is given by the

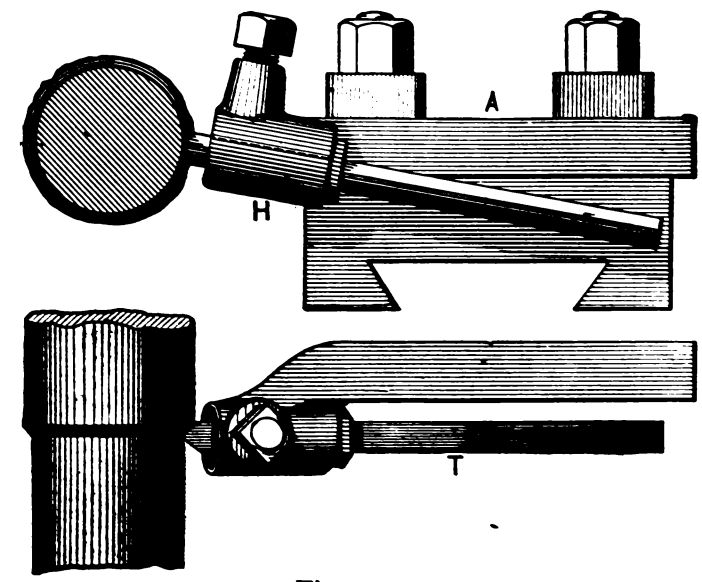

Fig. 1031.

circular shape of the cutter, while side clearance may be given by inclining the face B of the holder (against which the face of the cutter is bolted) to the necessary angle from a vertical line. The

face C is ground up to resharpen the cutting edge, and may be reground until the circumference of the wheel is used up.

Figs. 1031, 1032, 1033, and 1034 represent lathe tool holders by Messrs. Bental Brothers, of Fullbridge Works, Maldon, England. The holder consists of a bar A, having at the front end a hub H, containing a bush in two halves, through which the tool T passes; this tool consisting of a piece of V-shaped steel. A set screw on top of the hub clamps the two half-bushes together, and these, as their faces do not meet, grip the tool.

The advantage possessed by this form of holder is that the top face of the tool may be given any desired degree of side rake or

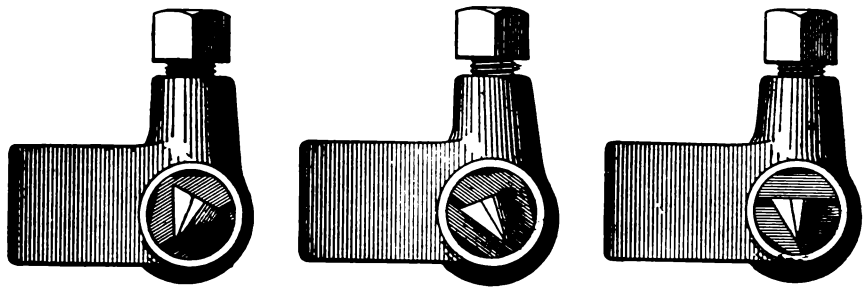

Fig. 1032. Fig. 1033. Fig. 1034.

angle required by the nature of the work by simply revolving the bushes in the hub of the holder. Thus, in Fig. 1034 the top face of the tool stands level, as would be required for brass work; in Fig. 1032 the tool is canted over, giving its top face angle a rake in the direction necessary when cutting wrought iron and feeding toward the dead centre; and in Fig. 1033 the tool is in position for carrying a cut on wrought iron, the feed being toward the live centre of the lathe. This capacity to govern the angle of the top face of the tool is a great advantage, and one not possessed by ordinary tool holders, especially since it does not sensibly alter

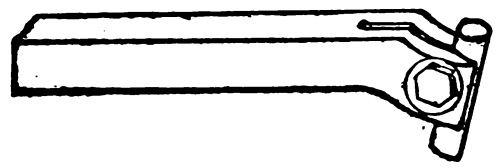

Fig. 1035.

the height of the tool point with relation to the work. Again, the V-shape of the tool steel causes the bushes to grip and support the tool sideways, and, by reducing the area of tool surface requiring to be ground, facilitates the tool grinding to that extent. Altogether, this is an exceedingly handy device. It is obvious, however, that it cannot be moved from side to side of the tool rest unless a right and left-hand tool holder be used; that is to say, there must be two holders having the hub on the opposite side of the body A.

Figs. 1035, 1036, 1037, and 1038 represent tool holders in which the tools consist of short pieces of steel held end-wise and at a

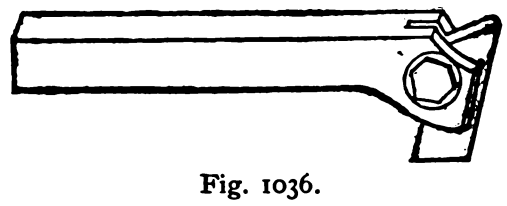

Fig. 1036.

given angle, so that the amount of clearance is constant. The holders Figs. 1035 and 1036 are split, and the tool is secured by the screw shown. Fig. 1037 represents a tool holder in which the tool is held by a clamp, whose stem passes through the body of the holder so as to bring the fastening nut out at the end, where it is more convenient to get at than are the screw heads in Figs. 1035 and 1036. It is obvious, however, that such a holder is weak and unsuitable for any tools save those used for very light duty indeed, while all this class of holders is open to the objection that the side of the holder prevents the tool from passing up into a corner, hence the cut cannot be carried up to a shoulder on the work. This may, however, be accomplished by bending the end of the holder round; but in this case two holders, a right and a left, will be necessary.

Fig. 1038 represents a form of tool holder of this kind in which the tool may be set for height by a set screw beneath it.

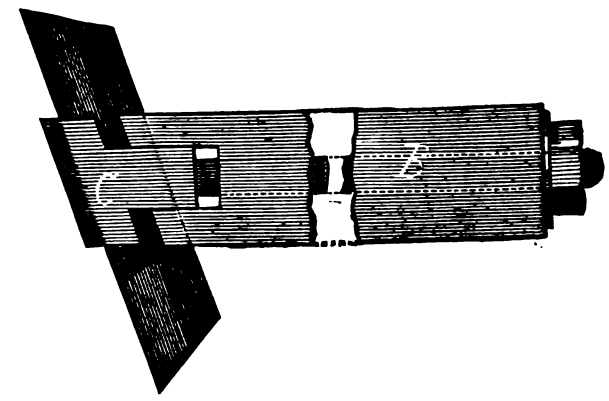

Fig. 1037.

Fig. 1039 represents a tool holder and work-steadying device combined. The holder is held in the lathe tool rest in the usual manner, and affords slideway to a slide operated by the handle shown at the right-hand end.

The tool is carried at the other end of this slide, there being

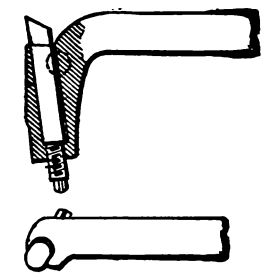

Fig. 1038.

shown in the figure a cutting-off tool in position. At the end of the holder is a hub and three adjusting screws whose ends steady the work, and which are locked in their adjusted position by the chuck nuts shown.

THE POWER REQUIRED TO DRIVE CUTTING TOOLS.—From experiments made by Dr. Hartig, he concluded that by multiplying

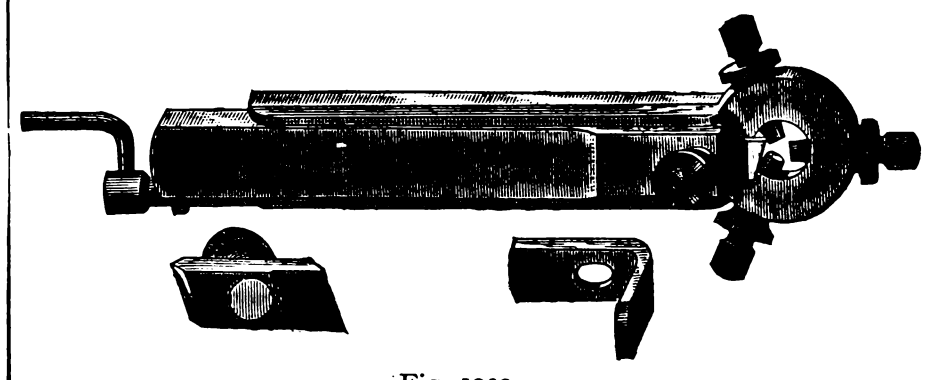

Fig. 1039.

the weight of the metal cuttings removed per hour by certain decimal figures (or constants) the horse-power required to cut off that quantity of metal might be obtained. These decimal constants are as follows:

Lbs. of metal cut off per hour,	cast iron	× ·0314 =	horse-power required to drive the lathe.
,, ,, ,,	wrought iron	× ·0327 =	,,
,, ,, ,,	steel	× ·4470 =	,,

FOR PLANING TOOLS.

Lbs. of steel cut off per hour		× ·1120 =	horse-power required to drive planer.
,, wrought iron	,,	× ·0520 =	,, ,,
,, gun metal	,,	× ·0127 =	,, ,,

Chapter XI.—DRILLING AND BORING IN THE LATHE.

FOR drilling in the lathe, the twist drill is employed not only on account of its capacity to drill true, straight, and smooth holes, but also because its flutes afford free egress to the cuttings and obviate the necessity of frequently withdrawing the drill to clear the hole of the cuttings.

In the smaller sizes of twist drill, the stem or shank is made parallel, as in Fig. 1040, while in the larger sizes it is made taper, as in Fig. 1041, for reasons which will appear hereafter.

Fig. 1040.

The taper shanks of twist drills are given a standard degree of taper of $\frac{5}{8}$ inch per foot of length, which is termed the Morse taper. A former standard, termed the American standard, is still used to a limited extent, its degree of taper being $\frac{9}{16}$ inch per foot.

Parallel shanked twist drills are driven by chucks, while taper, shanked ones, are driven by sockets, such as in Fig. 1042, from C to D, fitting into the lathe centre hole, while the bore at the other end is the Morse standard taper, to receive the drills E E, which have a projection such as shown at A, which by fitting into a slot that meets the end of the taper holes in the socket, lock the drill and prevent its revolving in the socket, while affording a means of forcing the drill out by inserting a key K, as shown in the figure.*

Each socket takes a certain number of different sized drills, the shanks of the smaller drills being in some cases longer than the drill body.

Number	1	socket receives drills from		$\frac{1}{8}$	to	$\frac{19}{32}$	inch inclusive.
,,	2	,,	,,	$\frac{5}{8}$	,,	$\frac{29}{32}$	,, ,,
,,	3	,,	,,	$\frac{15}{16}$	,,	$1\frac{1}{4}$	,, ,,
,,	4	,,	,,	$1\frac{9}{32}$	,,	2	,, ,,
,,	5	,,	,,	$2\frac{1}{32}$	,,	$2\frac{1}{8}$	,, ,,

These sockets are manufactured ready to receive the drills, but are left unturned at the shank end so that they may be fitted to the particular lathe or machine in which they are to be used, no standard size or degree of taper having as yet been adopted.

Fig. 1041.

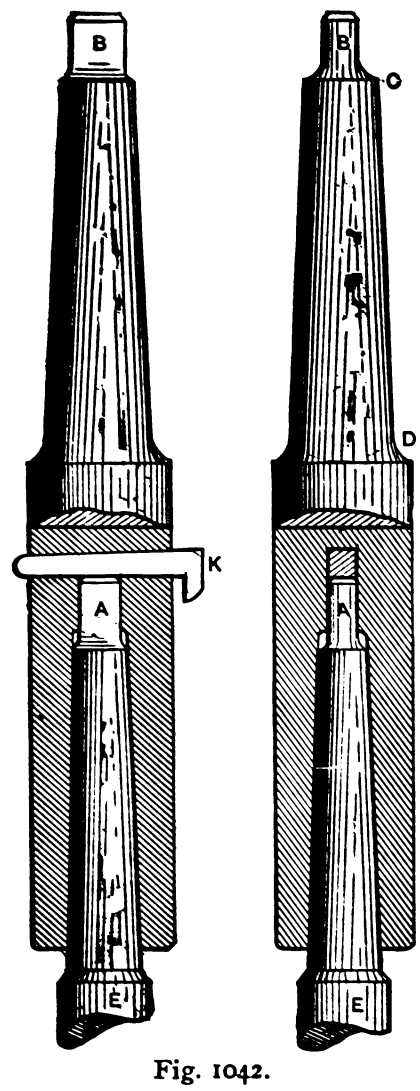

Fig. 1042.

A twist drill possesses three cutting edges marked A, B, C respectively in Fig. 1043, and of these C is the least effective, because it cannot be made as keen as is desirable for rapid and clean cutting, and therefore necessitates that the drill be given an unusually fine rate of feed as compared with other cutting tools.

The *land* of the drill—or, in other words, the circumference between the flutes—is backed off to give clearance, as is shown in Fig. 1044, a true circle being marked with a dotted line, and the drill being of full diameter from A to B only. The object of this clearance is to prevent the drill from seizing or grinding against the walls of the hole, as it would otherwise be apt to do when the outer corner wore off, as is likely to be the case.

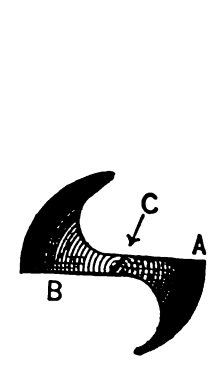

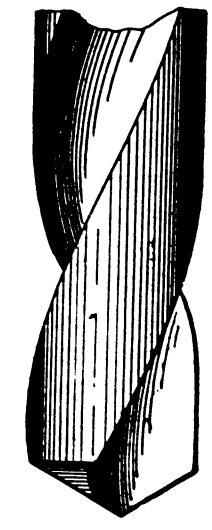

Fig. 1043.

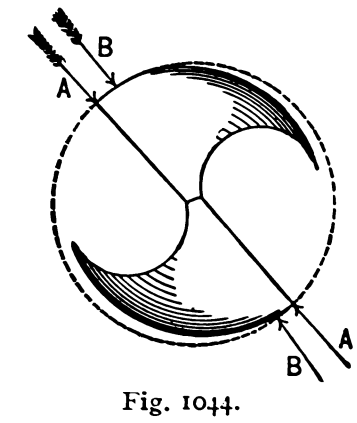

Fig. 1044.

Twist drills having three and more flutes have been devised and made, but the increased cost and the weakness induced by the extra flutes have been found to more than counterbalance the gain due to an increase in the number of cutting edges. Further, the increase in the number of flutes renders the grinding of the drill a more delicate and complicated operation.

* See also Shanks and Sockets for Drills used in the Drilling Machine.

The keenness and durability of the cutting edge of a twist drill are governed by the amount of clearance given by the grinding to the cutting edge, by the angle of one cutting edge to the other, and by the degree of twist of the flute. Beginning with the angle of the front face, we shall find that it varies at every point in the diameter of the drill, being greatest at the outer corner and least at the centre of the drill, whatever degree of spirality the groove or flute may possess. In Fig. 1045, for example, we may con-

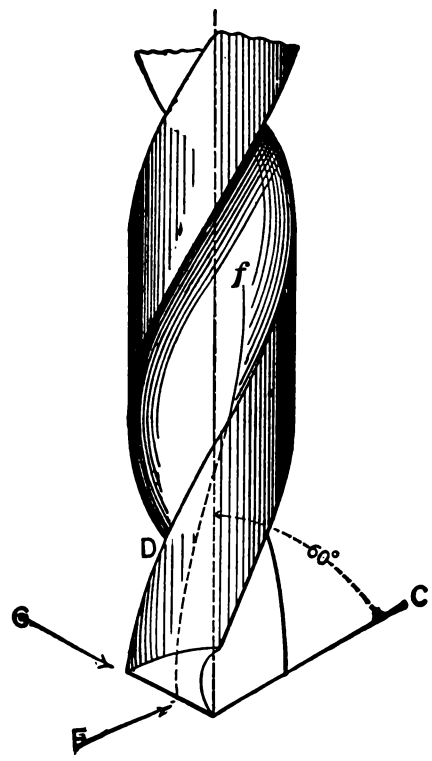

Fig. 1045.

sider the angle at the corner C and at the point F in the length of the cutting edge. The angle or front rake of the corner C is obviously that of the outer edge of the spiral C D, while that of the point F is denoted by the line F *f*, more nearly parallel to the drill axis, and it is seen that the front rake increases in proportion as the corner C is approached, and diminishes as the drill centre or point is approached.

It follows, then, that if the angle of the bottom face of the drill be the same from the centre to the corner of the drill, and we

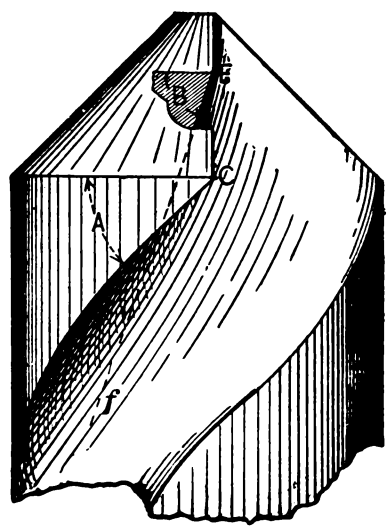

Fig. 1046.

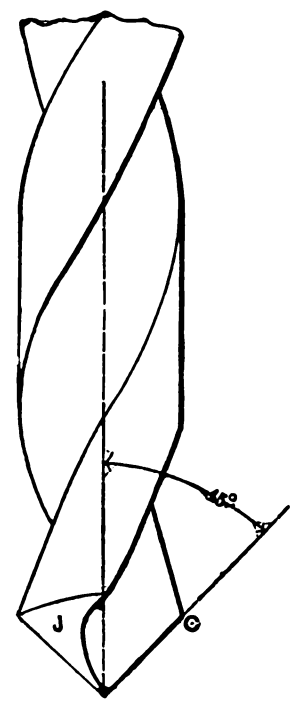

Fig. 1047.

consider the cutting edge simply as a wedge and independent of its angle presentation to the work, we find that it has a varying degree of acuteness at every point in its length. This may be seen from Fig. 1046, in which the end face is ground at a constant angle from end to end to the centre line of the drill, and it is seen that the angle A represents the wedge at point C and the angle B the wedge at the point F in the length of the cutting edge, and it follows that the wedge becomes less acute as the centre of the drill is approached from the point C. If, then, we give to the end face a degree of clearance best suited for the corner C, it will be an improper one for the cutting edge near the drill point; or if we adopt an angle suitable for the point, it will be an improper one for the corner C.

This corner performs the most cutting duty, because its path of revolution is the longest, or rather of the greatest circumference, and it operates at the highest rate of cutting speed for the same reason, hence it naturally wears and gets dull the quickest.

As this wear proceeds the circumferential surface near this corner grinds against the walls of the hole, causing the drill to heat and finally to cease cutting altogether.

For these reasons it is desirable that the angle of the end face, or the angle of clearance, be made that most suitable to obtain endurance at this corner. It may be pointed out, however, that the angle of one cutting edge to the other, or, what is the same thing, its angle to the centre line of the drill, influences the keenness of this corner. In Fig. 1045, for example, each edge is at an angle of 60° to the drill axis, this being the angle given to drills by the manufacturers as most suitable for general use. In Fig. 1047, the angle is 45°, and it will be clearly seen that the corner C is much less acute; an angle of 45° is suitable for brass work or for

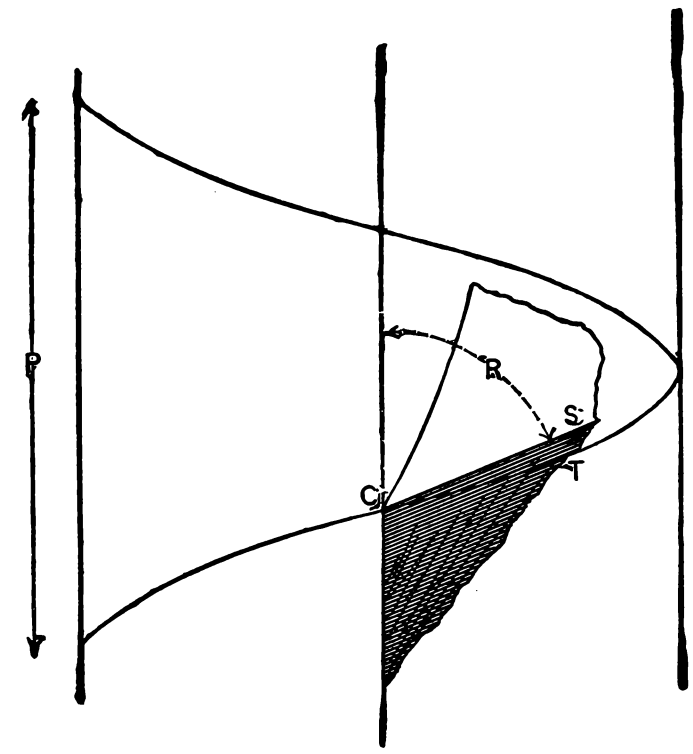

Fig. 1048.

any work in which the holes have been cored out and the drill is to be used to enlarge them.

Referring again to the angle of clearance of the end faces, it can be shown that in the usual manner of grinding twist drills the conditions compel the amount of clearance to be made suitable for the point of the drill, and therefore unsuitable for the corner C, giving to it too much clearance in order to obtain sufficient clearance for the remainder of the cutting edge. Suppose, for example, that we have in Fig. 1048 a spiral representing the path of corner C during one revolution, the rate of feed being shown magnified by the distance P, and the spiral will represent the inclination of that part of the bottom of the hole that is cut by corner C, and the angle of the end face of the drill to the drill axis will be angle R. The actual clearance will be represented by the angle between the end face S of the drill and the spiral beneath it, as denoted by T. But if we take the path of the point F, Fig. 1045, during the same revolution, which is represented by the spiral in Fig. 1049, we find that, in order to clear the end of the hole, it must have more angle to the centre line of the drill, as is clearly shown, in order to have the clearance necessary to enable the point F to cut, because of the increased spiral. It follows that, if the same degree of clearance is given throughout the full length of the cutting edge, it must be made suitable for the point of the drill, and will therefore be excessive for the corner C.

This fault is inseparable from the method of grinding drills in ordinary drill-grinding machines, which is shown in Fig. 1050,

the line A A representing the axis of the motion given to the drill in these machines. It is obvious that the line A A being parallel to the face of the emery-wheel, the angle of clearance is made equal throughout the whole length of the cutting edge. This is, perhaps, made more clear in Fig. 1051, in which we have supposed the drill to take a full revolution upon the axis A A, and as a result it would be ground to the cylinder represented by the

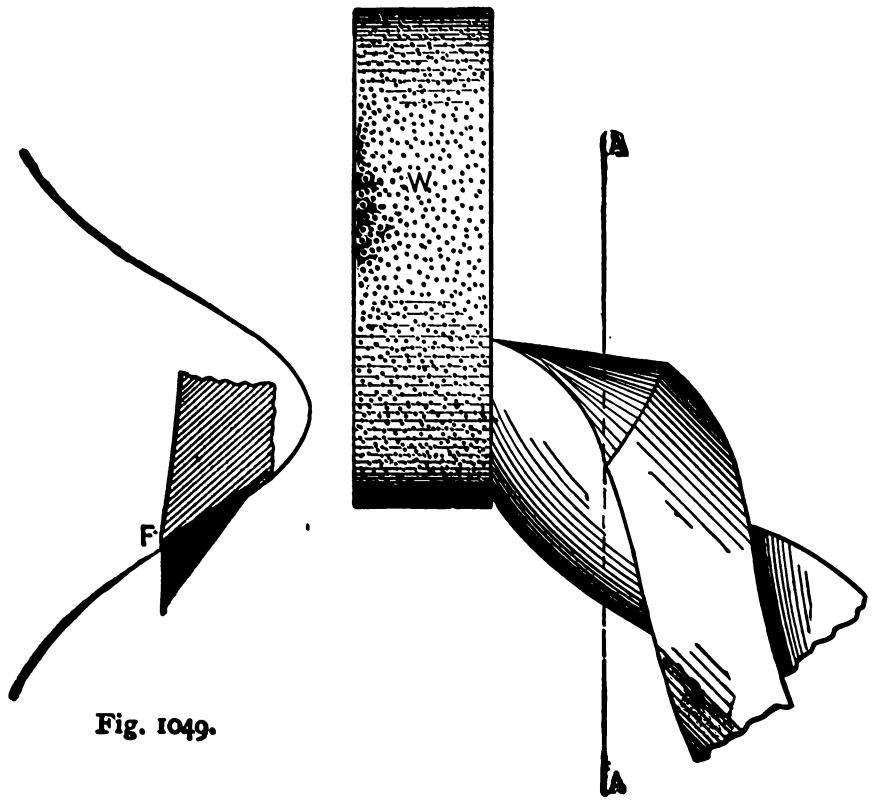

Fig. 1049.

Fig. 1050.

dotted lines. We may, however, place the axis on which the drill is moved to grind it at an angle to the emery-wheel face, as at B, Fig. 1052, and by this means we shall obtain two important results: (1) The angle of B may be made such that the clearance will be the same to the actual surface it cuts at every point in the length of the cutting edge, making every point in that length equally keen and equally strong, the clearance being such as it is

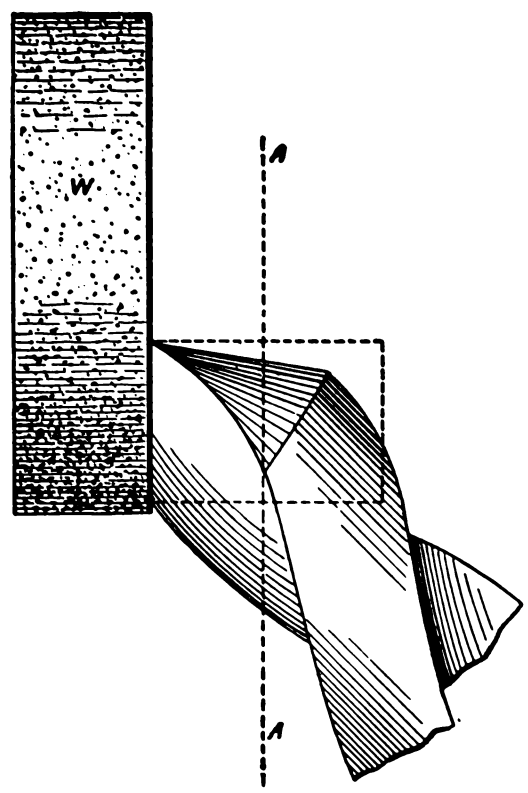

Fig. 1051.

determined is the most desirable. (2) The clearance may be made to increase as the heels of each end face are approached from the cutting edge. This is an advantage, inasmuch as it affords freer access to the oil or other lubricating or cooling material. If we were to prolong the point of the drill sufficiently, and give it a complete revolution on the axis B, we should grind it to a cone, as shown by the dotted lines in Fig. 1052.

In Fig. 1053 we have a top, and in Fig. 1054 a sectional, view of a conical recess cut by a drill, with a cylinder R lying in the same. P represents in both views the outer arc or circle which would be described by the outer corner, Fig. 1045, of the drill, and Q the

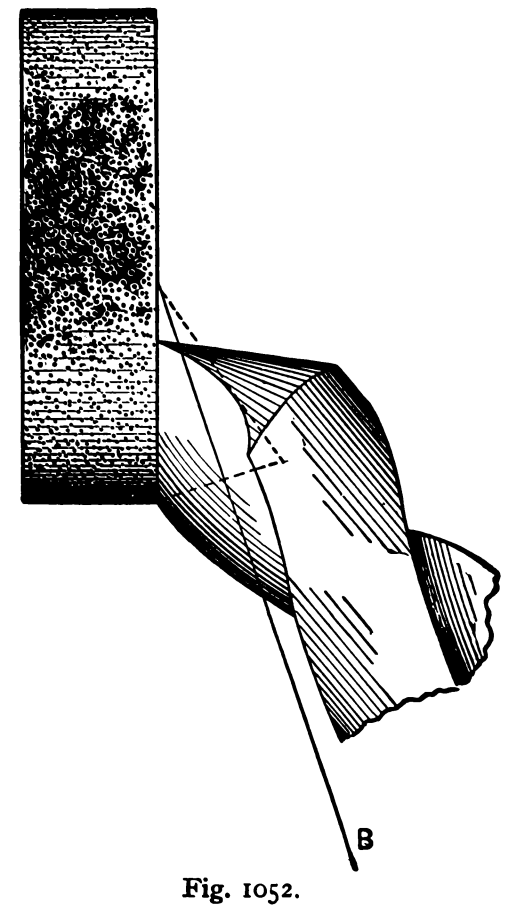

Fig. 1052.

path or arc described or moved through by the point at F, Fig. 1045, of the drill. At V and W are sectional views of the cylinder R, showing that the clearance is greater at V than at W. The cylinder obviously represents the end of a drill as usually ground.

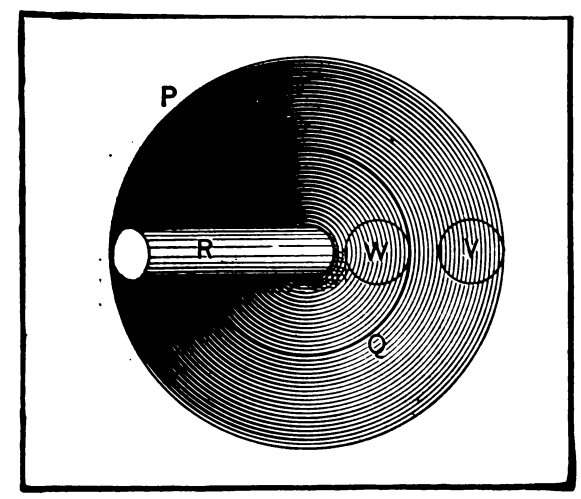

Fig. 1053. Top View.

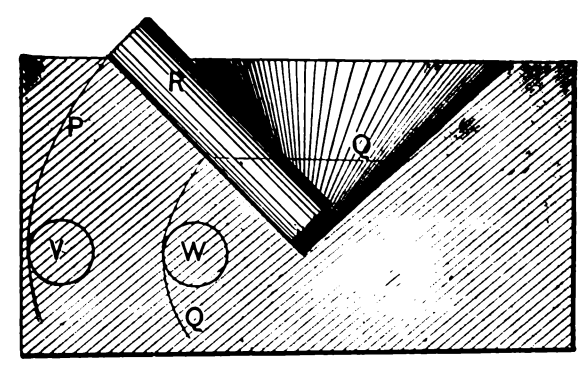

Fig. 1054. Sectional View.

In Figs. 1055 and 1056 we have two views of a cone lying in a recess cut by a drill, the arcs and circles P and Q corresponding to those shown in Fig. 1055, and it is seen that in this case the amount of clearance between V and P and between W and Q are equal, V representing a cross-section of the cone at its largest end,

and W a cross-section at the point where the cone meets the circle Q. It follows, therefore, that drills ground upon this principle may be given an equal degree of clearance throughout the full length of each cutting edge, or may have the clearance increased or diminished towards the point at will, according to the angle of the line B in Fig. 1052.

In order that the greatest possible amount of duty may be obtained from a twist drill, it is essential that it be ground perfectly

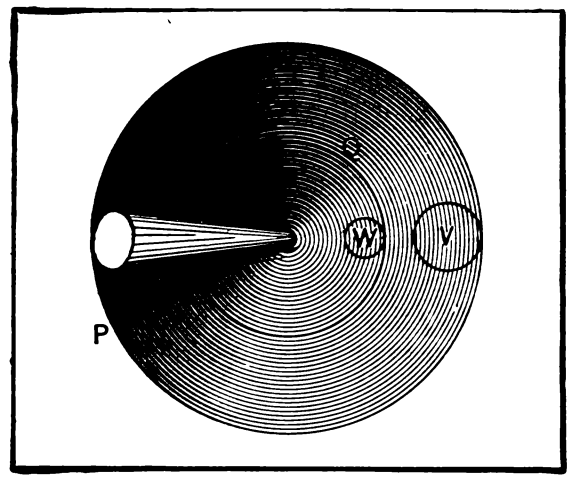

Fig. 1055. Top View.

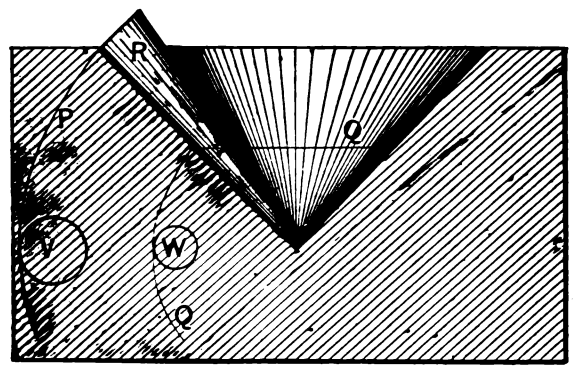

Fig. 1056. Sectional View.

true, so that the point of the drill shall be central to the drill and in line with the axis on which it revolves. The cutting edges must be of exactly equal length and at an equal degree of angle from the drill axis. To obtain truth in these respects it is necessary to grind the drill in a grinding machine, as the eye will not form a sufficiently accurate guide if a maximum of duty is to be obtained. The cutting speeds and rates of feed recommended by the Morse Twist Drill and Machine Company are given in the following table.

The following table shows the revolutions per minute for drills from $\frac{1}{16}$ in. to 2 in. diameter, as usually applied :—

Diameter of Drills.	Speed for Steel.	Speed for Iron.	Speed for Brass.	Diameter of Drills.	Speed for Steel.	Speed for Iron.	Speed for Brass.
inch.				inch.			
$\frac{1}{16}$	940	1280	1560	$1\frac{1}{16}$	54	75	95
$\frac{1}{8}$	460	660	785	$1\frac{1}{8}$	52	70	90
$\frac{3}{16}$	310	420	540	$1\frac{3}{16}$	49	66	85
$\frac{1}{4}$	230	320	400	$1\frac{1}{4}$	46	62	80
$\frac{5}{16}$	190	260	320	$1\frac{5}{16}$	44	60	75
$\frac{3}{8}$	150	220	260	$1\frac{3}{8}$	42	58	72
$\frac{7}{16}$	130	185	230	$1\frac{7}{16}$	40	56	69
$\frac{1}{2}$	115	160	200	$1\frac{1}{2}$	39	54	66
$\frac{9}{16}$	100	140	180	$1\frac{9}{16}$	37	51	63
$\frac{5}{8}$	95	130	160	$1\frac{5}{8}$	36	49	60
$\frac{11}{16}$	85	115	145	$1\frac{11}{16}$	34	47	58
$\frac{3}{4}$	75	105	130	$1\frac{3}{4}$	33	45	56
$\frac{13}{16}$	70	100	120	$1\frac{13}{16}$	32	43	54
$\frac{7}{8}$	65	90	115	$1\frac{7}{8}$	31	41	52
$\frac{15}{16}$	62	85	110	$1\frac{15}{16}$	30	40	51
1	58	80	100	2	29	39	49

To drill one inch in soft cast iron will usually require: For $\frac{1}{4}$ in. drill, 125 revolutions; for $\frac{1}{2}$ in drill, 120 revolutions; for $\frac{3}{4}$ in. drill, 100 revolutions; for 1 in. drill, 95 revolutions.

The rates of feed for twist drills are thus given by the same Company :—

Diameter of drill.	Revolutions per inch depth of hole.
$\frac{1}{16}$ inch	125
$\frac{1}{4}$,,	,,
$\frac{3}{8}$,,	120 to 140
$\frac{1}{2}$,,	,, ,,
$\frac{3}{4}$,,	1 inch feed per minute
1 ,,	,, ,, ,,
$1\frac{1}{2}$,,	,, ,, ,,

Taking an inch drill as an example, we find from this table that the rate of feed is for iron $\frac{1}{100}$th inch per drill revolution, and as the drill has two cutting edges it is obvious that the rate of feed for each edge is $\frac{1}{200}$th inch per revolution. But it can be shown that this will only be the case when the drill is ground perfectly true; or, in other words, when the drill is so ground that each edge will take a separate cut, or so that one edge only will cut, and that in either case the rate of feed will be diminished one-half.

In Fig. 1057, for example, is shown a twist drill in which one cutting edge (*e*) is ground longer than the other, and the effect this would produce is as follows. First, suppose the drill to be fed automatically, the rate of feed being $\frac{1}{100}$th inch, and the whole of this feed would fall on cutting edge *e*, and, being double what it should be, would in the first place cause the corner *c* to dull very rapidly, and in the second place be liable to cause the drill to break when *c* became dull.

In the second place the drill would make a hole of larger diameter than itself, because the point of the drill will naturally be forced by the feed to be the axis or centre of cutting edge revolution, which would therefore be on the line *b b*. This would cause the diameter of hole drilled to be determined by the radius of the cutting edge *e* rather than by the diameter of the drill. Again,

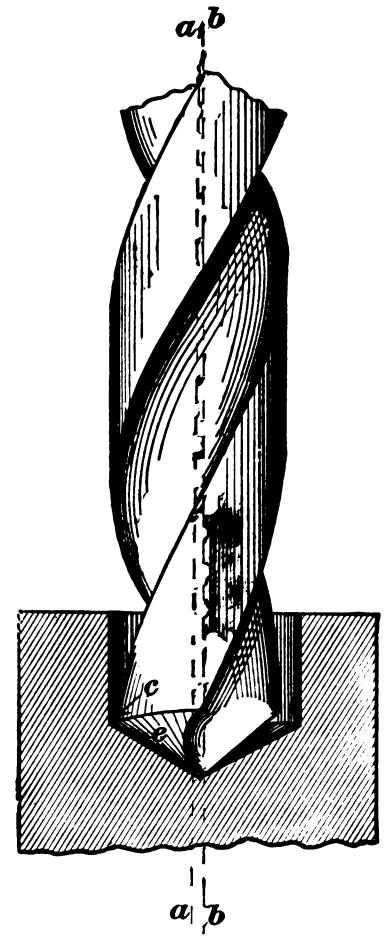

Fig. 1057.

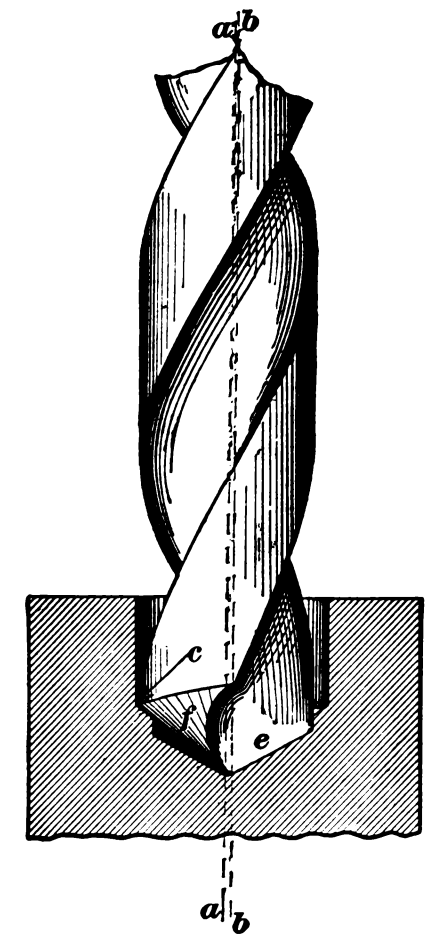

Fig. 1058.

the side of the drill in line with corner *c* would bind against the side of the hole, tending to grind away the clearance at the corner *c*, which, it has been shown, it is of the utmost importance to keep sharp. But assuming $\frac{1}{200}$th inch to be the proper feed for each cutting edge, and the most it can carry without involving excessive grinding, then the duty of the drill can only be one-half what it would be were both cutting edges in action.

In Fig. 1058 is shown a twist drill in which one cutting edge is ground longer than the other, and the two cutting edges are not at the same angle to the axis *a a* of the drill.

Here we find that the axis of drill rotation will be on the line *b* from the point of the drill as before, but both cutting edges will perform some duty. Thus edge *e* will drill a hole which the outer end of *f* will enlarge as shown. Thus the diameter of hole drilled will be determined by the radius of corner *c*, from the axis of drill revolution, and will still be larger than the drill. A drill thus ground would drill a more true and round hole than one ground as in Fig. 1057, because as both cutting edges perform duty the drill would be steadied.

The rate of feed, however, would require to be governed by that length of cutting edge on *f* that acts to enlarge the hole made by *e*,

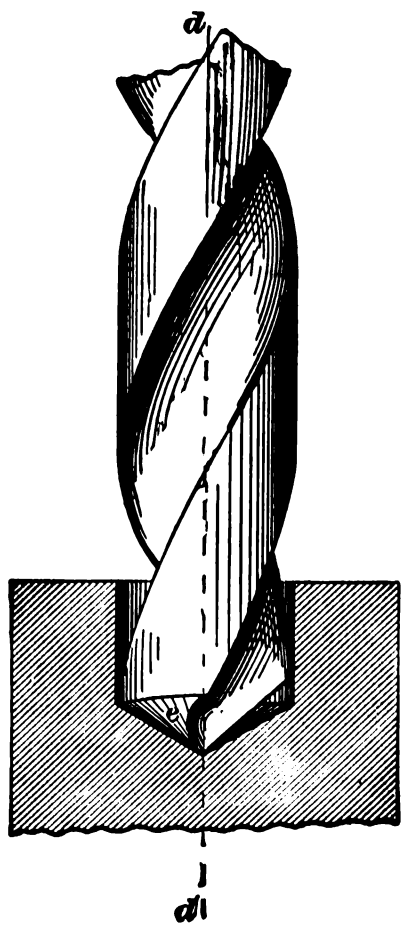

Fig. 1059.

and therefore would be but one-half what would be practicable if the drill were ground true. Furthermore, the corner *c* would rapidly dull because of its performing an undue amount of duty, or in other words, because it performs double duty, since it is not assisted by the other corner as it should be. In both these examples the drill if rigidly held would be sprung or bent to the amount denoted by the distance between the line *a a*, representing the true axis of the drill, and line *b b*, representing the line on which the drill point being ground and one-sided compels the drill to revolve ; hence one side of the drill would continuously rub against the walls of the hole the drill produced, acting, as before observed, to grind away the clearance that was shown in figure and also to dull corner *c*.

Fig. 1059 shows a case in which the point of the drill is central to the drill axis *d d*, but the two cutting edges are not at the same angle. As a result all the duty falls on one cutting edge, and the hole drilled will still be larger in diameter than the drill is, because there is a tendency for the cutting edge *e* to push or crowd the drill over to the opposite side of the hole.

Fig. 1059*a* represents a drill designed by Mr. John Worth Heyer for the Pratt and Whitney Co., for boring deep holes straight, say ¼ inch in diameter and several feet deep. The step at *b* breaks the cuttings, enabling them to pass through groove *a*, and serving to keep the drill central. The point *c* is a trifle to the left of the centre *d*, *d*. The cutting edge must be central to the drill body. Oil is forced through the passage *e*, carrying the cuttings out through the groove *a*.

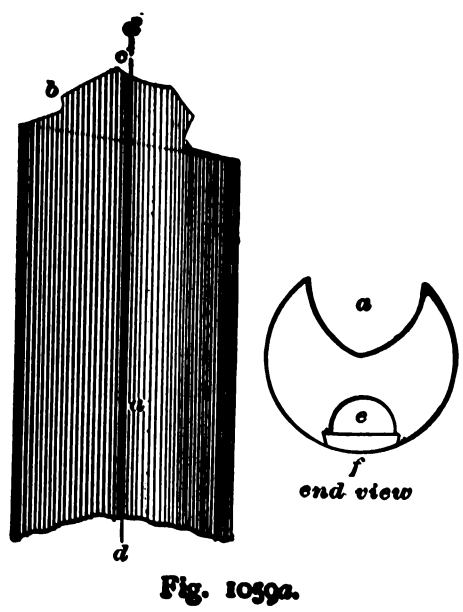

Fig. 1059a.

Professor John E. Sweet advocates grinding twist drills as in Fig. 1060 (which is from *The American Machinist*), the object being to have a keener cutting edge at the extreme point of the drill.

In a paper on cutting tools read before the British Institution of Mechanical Engineers the following examples of the efficiency of the twist drill are given—

Referring to a ½ inch twist drill, it is said :

"The time occupied from the starting of each hole in a hammered scrap-iron bar till the drill pierced through it varied from 1 minute 20 seconds to 1½ minutes. The holes drilled were perfectly straight. The speed at which the drill was cutting was nearly 20 feet per minute in its periphery, and the feed was 100 revolutions per inch of depth drilled. The drill was lubricated with soap and water, and went clean through the 2¾ inches without being withdrawn, and after it had drilled each hole it felt quite cool to the hand, its temperature being about 75°. It is found that 120 to 130 such holes can be drilled before it is advisable to resharpen the twist drill. This ought to be done immediately the drill exhibits the slightest sign of distress. If carefully examined after this number of holes has been drilled, the prominent cutting parts of the lips which have removed the metal will be found very slightly blunted or rounded to the extent of about $\frac{1}{100}$th inch, and on this length being carefully ground by the machine off the end of the twist drill, the lips are brought up to perfectly sharp cutting edges again.

"The same sized holes, ½ inch diameter and 2¾ inches deep, have been drilled through the same hammered scrap-iron at the extraordinary speed of 2¾ inches deep in 1 minute and 5 seconds, the number of revolutions per inch being 75. An average number of 70 holes can be drilled in this case before the drill requires resharpening. The writer considers this test to be rather too severe, and prefers the former speed.

"In London, upward of 3000 holes were drilled ⅝ inch diameter and ⅜ inch deep through steel bars by one drill without regrinding it. The cutting speed was in this instance too great for cutting steel, being from 18 to 20 feet per minute, and the result is extraordinary. Many thousands of holes were drilled ⅛ inch diameter, through cast iron $\frac{7}{16}$ths inch deep with straight-shank twist drills gripped by an eccentric chuck in the end of the spindle of a quick-speed drilling machine. The time occupied for each hole was from 9 to 10 seconds only. Again, ¼-inch holes have been drilled through wrought copper 1⅜ inches thick at the speed of one hole in 10 seconds. With special twist drills, made for piercing hard Bessemer steel, rail holes, $\frac{13}{16}$ths inch deep and $\frac{29}{32}$nds inch diameter, have been drilled at the rate of one hole in 1 minute and 20 seconds in an ordinary drilling machine. Had the machine been stiffer and more powerful, better results could have been obtained. A similar twist drill, $\frac{29}{32}$nds inch in diameter, drilled a hard steel rail $\frac{13}{16}$ths inch deep in 1 minute, and another in 1 minute 10 seconds. Another drill, ⅝ inch diameter, drilled ¾ inch deep in 38 seconds, the cutting speed being 22 feet per minute. This speed of cutting rather distressed the drill; a speed

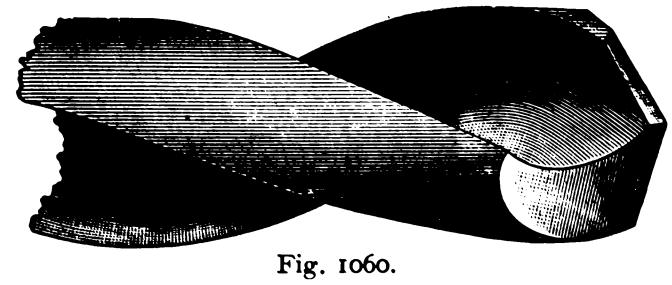

Fig. 1060.

of 16 feet per minute would have been better. The steel rail was specially selected as being one of the hardest of the lot."

Drills ground by hand may be tested for angle by a protractor, as in Fig. 1061, and for equal length of cutting edge by resting them upon a flat surface, as B in Fig. 1062, and applying a scale as at S in the figure. In the case of very small drills, it is difficult to apply either the protractor or the scale, as well as to determine the amount of clearance on the end face. This latter, however, may be known from the appearance of the cutting edge at the point A in Fig. 1063, for if the line A is at a right angle to F, there is no clearance, and as clearance is given this line inclines as shown at B in the figure, the inclination increasing with increased clearance, as is shown at C. When this part of the edge inclines in the opposite direction, as at D in the figure, the curved edges *e f* stand the highest, and the drill cannot cut. The circum-

ferential surface of a drill should never be ground, nor should the front face or straight side of the flute be ground unless under

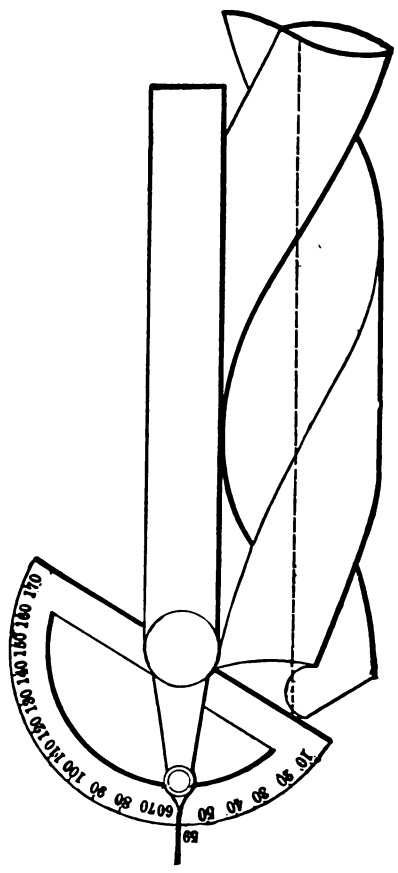

Fig. 1061.

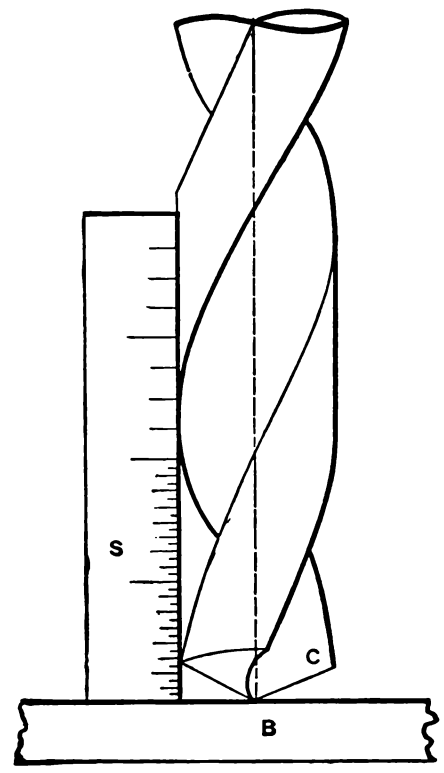

Fig. 1062.

unusual conditions, such as when it is essential, as in drilling very thin sheet metal, to somewhat flatten the corner (*c* in Fig. 1062), in

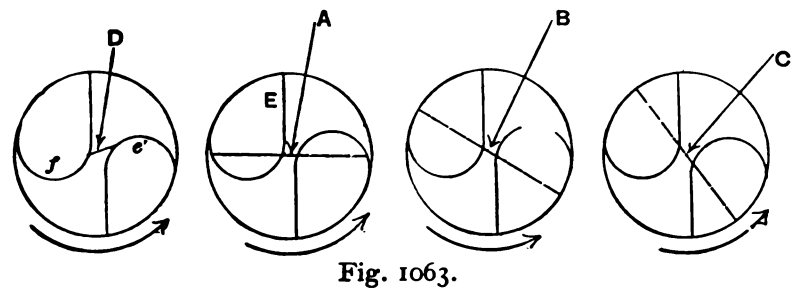

Fig. 1063.

order to reduce its tendency to run forward, in which case care must be taken not to grind the front face sufficiently to reduce the full

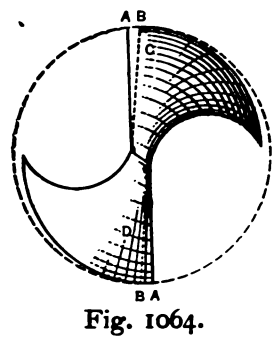

Fig. 1064.

diameter. In Fig. 1064, for example, that part of the circumference lying between A and B being left of full circle, the faces

Fig. 1065.

of the flutes might be ground away as denoted by the dotted lines C D without affecting the drill diameter.

When a twist drill is to be used for wood and is driven by a machine it is termed a bit, and is provided with a conical point to steady it, and two wings or spurs, as in Fig. 1066, which sever the fibres of the wood in advance of their meeting the

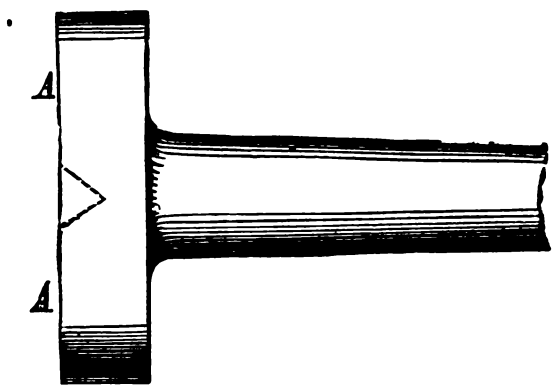

Fig. 1067.

main cutting edges and thus produce a smooth hole. The sharp conical point is used in place of the conical screw of the ordinary wood auger to avoid the necessity of revolving the drill or bit backwards to release the screw in cases in which the hole is not bored entirely through the work.

When the drill revolves and the work is to be held in the hands

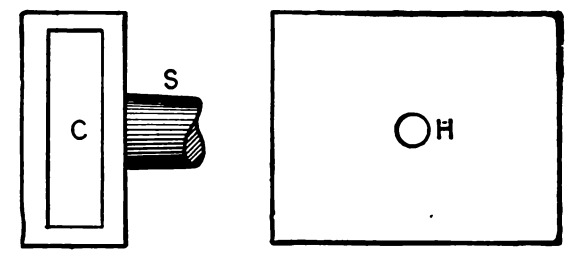

Fig. 1068.

a rest or table whereon to rest the work and hold it fair is shown in Fig. 1067, the taper shank fitting in the dead centre hole and the tailstock spindle being fed up by hand to feed the drill to its cut. The face A A of the chuck is at a right angle to the shank, and a coned recess is provided at the centre, as denoted by

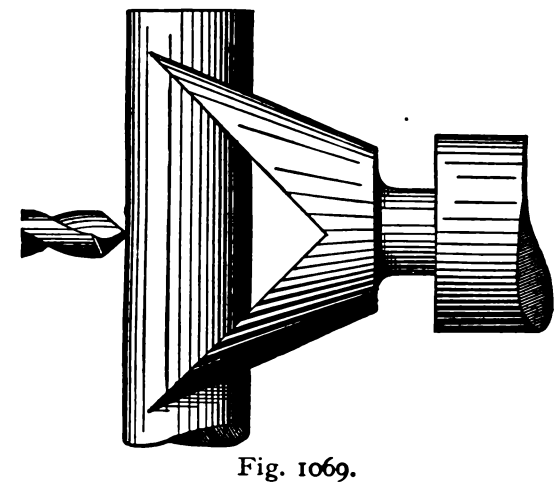

Fig. 1069.

the dotted lines, to permit the drill point to pass through the work without cutting the chuck.

For larger work a table, such as shown in Fig. 1068, is used, the cavity C permitting the drilling tool to pass through the work, there being a hole H provided for that purpose. The stem S fits in place of the dead centre. For cylindrical work the rest or chuck shown in Figs. 1069 and 1070 may be employed. It consists of a piece fitted to the tail spindle in place of the dead centre, its end being provided with V-grooves. These grooves

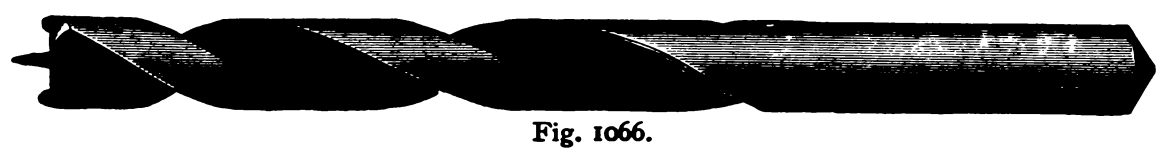

Fig. 1066.

Fig. 1065 represents the Farmer lathe drill, in which the flutes are straight and not spiral, by which means the tendency to run forward when emerging through the work is obviated.

are made true with the line of centres of the lathe, so that when the work is laid in them it will be held true. It is obvious that one groove would be sufficient, but two are more convenient—one

for large work and one for small work—so that the side of the shaft to be drilled shall not pass within the fork, but will protrude, so that the progress of the work can be clearly seen. In Fig. 1070 an end view of this chuck is shown It may be observed, however, that when starting the drill care must be taken to have it start true, or the drill may bend, and thus throw the work out of the true. For this reason the drills should be as short as possible when their diameters are small.

For square work this class of work table or chuck may be formed so as to envelop the work and prevent its revolving, thus relieving the fingers of that duty, and it may be so formed as to carry the work back or off the drill when the latter is retired after the drilling is performed.

Another and quite convenient method of holding work to be drilled by a revolving drill in the lathe is shown in Fig. 1071. It

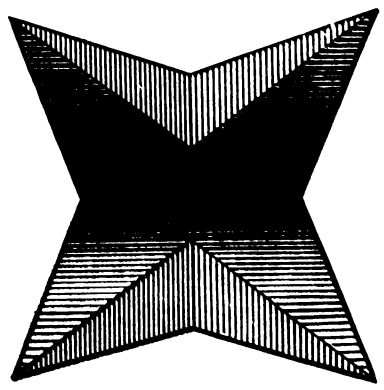

Fig. 1070.

consists of simply a bracket, *a b*, fitted to the tool-box of the slide rest, carrying a spindle with one end screwed to receive any face plates or chucks that fit the lathe live spindle. The bracket is kept in position by two pins in the under side of it, fitting into holes in the bottom piece of tool-box. If it be required to drill a straight row of holes, the spindle is fixed by the set-screws in its bracket, and the work is bolted to the face plate at the proper level, and traversed across opposite the drill in the lathe mandrel, by the cross screw of the slide rest, while it is fed up to the drill by the upper screw or the rack and pinion.

For circular rows of holes the centre line of the spindle is adjusted parallel with and at a proper distance from that of the mandrel. For holes in the edge of the work, the whole top of slide rest is turned round till the spindle is at right angles with the mandrel.

Work merely requiring to be held fast for drilling is bolted on one side of the face plate, and can then be adjusted exactly to

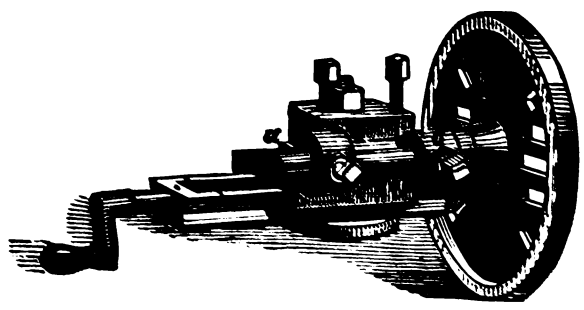

Fig. 1071.

the drill by the combined motions of the cross screw and the face plate on its centre. Small round work, while drilled in the end, can be held in a scroll chuck screwed on the spindle the same as a face plate.

The convenience of this device consists in this, that the work turned on the chuck may be drilled without moving it from the chuck, which may be so set as to cause the drilled holes to be at any required angle to the work surface, which is quite difficult of accomplishment by other ordinary means.

On account of the readiness with which a flat drill may be made to suit an odd size or employed to recess work with a flat or other required shape of recess, flat drills are not uncommonly used upon lathe work, and in this case they may be driven in the drill chucks already shown. A very convenient form of drill chuck for small drills is shown in Fig. 1072. It consists of a cylindrical chuck fitting from A to B into the coned hole in the live spindle so as to be driven thereby. At the protruding end C there is drilled a hole of the diameter of the wire forming the drill. At the end of this hole there is filed a slot D extending to the centre of the chuck. The end of the drill is filed half round and slightly taper, as shown in Fig. 1073 at D, so that the half-round end of the drill will pass into the slot of the chuck, therefore forming a driving piece which effectually prevents the drill from slipping, as is apt to occur with cylindrical stem or shank drills. If one size of wire be used for all drills, and the drill size be determined by the forging, the drill will run true,

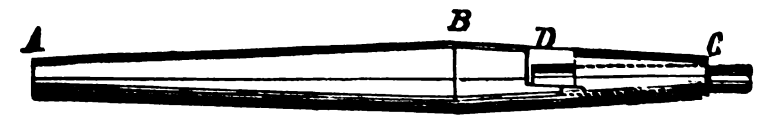

Fig. 1072.

being held quite firmly, and may be very readily inserted in or removed from the chuck.

But the flat drill possesses several disadvantages: thus, referring to figure, it must be enough smaller at A than at B to permit the cuttings to find egress, and this taper causes the diameter of the drill to be reduced at each drill grinding. The end B may, it is true, be made parallel for a short distance, but in this case the cuttings will be apt to clog in the hole unless the drill be frequently removed from deep holes to clear the cuttings. For these reasons the fluted drill or the twist drill is preferable, especially as their diameters are maintained without forging. For deep holes, as, say, those having a depth equal to more than twice the diameter, the flat drill, if of small diameter, as, say, an

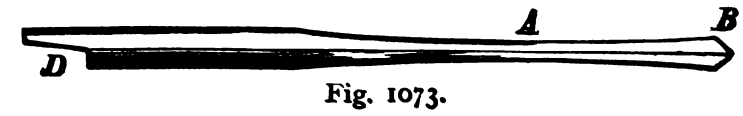

Fig. 1073.

inch or less, is unsuitable because of the frequency with which it must be removed from the hole to clear it of cuttings.

For fluted or twist drills the lathe may run quicker than for a flat drill, which is again an advantage. It sometimes becomes convenient in the exigencies which occur in the work of a general machine shop to hold a drill in a dog or clamp and feed it into the work with the lathe dead centre. In this case the drill should be held very firmly against the dead centre, or otherwise the drill may, when emerging through the back of the hole, feed itself forward, slipping off the dead centre, and causing the drill to catch and break, or moving the work in the chuck, to avoid which the drill should have a deep and well countersunk centre.

A very effective drill for holes that are above two inches in diameter and require enlarging is shown in Fig. 1074. It con-

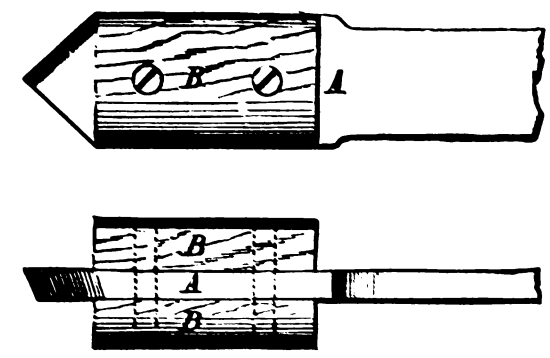

Fig. 1074.

sists of a piece of flat steel A, with the pieces of wood B fastened on the flat faces, the wood serving to steady the drill and prevent it from running to one side in the work. This drill is sometimes used to finish holes to standard size, in which case the hole to be bored or drilled should be trued out a close fit to the drill for a distance equal to about the diameter of the drill, and the face at the entrance of the hole should be true up. This is necessary to enable the drill to start true, which is indispensable to the proper operation of the drill.

This drill is made by being turned up in the lathe, and should have at the stock end a deep and somewhat large centre, so that

when in use it may not be liable to slip off the dead centre of the lathe. The drill is held at the stock end by being placed in the lathe dead centre and is steadied, close to the entrance of the hole in the work, by means of a hook which at one end embraces

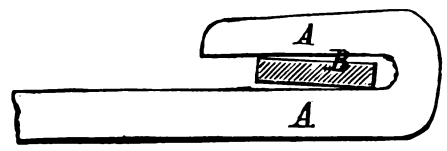

Fig. 1075.

the drill, as shown in Fig. 1075, in which A represents the hook and B the drill.

This drill will bore a parallel hole, but if the same be a long or a deep one it is apt to bore gradually out of true unless the bore of the hole is first trued from end to end with a boring tool before

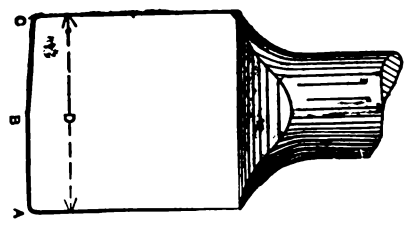

Fig. 1076.

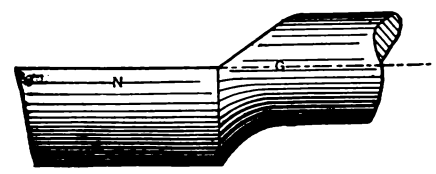

Fig. 1077.

using the drill. It is often employed to enlarge a hole so as to admit a stout boring tool, and to remove the hard surface skin from which the boring tool is apt to spring away.

HALF-ROUND BIT OR POD AUGER.—For drilling or enlarging holes of great depth (in which case it is difficult to drill straight holes with ordinary drills), the half-round bit—Figs. 1076

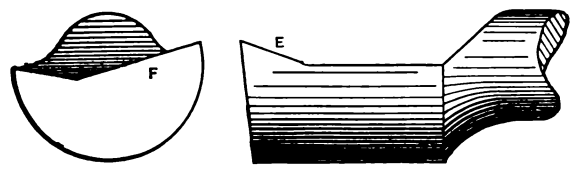

Fig. 1078.

and 1077—is an excellent tool. Its diameter D is made that of the required hole, the cutting being done at the end only from A to B, from B to C being ground at a slight angle to permit the edge from A to B to enter the cut. When a half-round bit is to be used on iron or steel, and not upon brass, it may be made

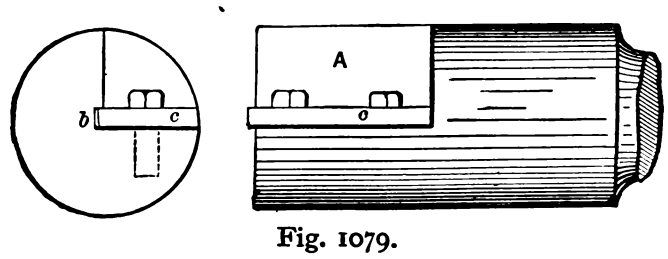

Fig. 1079.

to cut more freely by giving the front face rake as at E F, Fig. 1078.

To enable a bit of this kind to be adjusted to take up the wear, it may be formed as in Fig. 1079, in which a quarter of the circumference is cut away at A, and a cutter *c* is bolted in position projecting into a recess at *b* to secure the cutter in addition to the bolts. Pieces of paper may be inserted at *b* to set out the cutter.

An excellent form of boring bar and cutter is shown in Figs. 1080 and 1081.

Fig. 1082 shows a side view of the cutter removed from the bar; Fig. 1081 an end, and Fig. 1080 a side view of the bar and cutter. The cutter is turned at A and B to fit the bore of the bar. The cutting edge C extends to the centre of the bar, while that at D does not quite reach the centre. These edges are in a line as shown in the end view. On account of the thickness of the cutter not equaling the diameter of the bore through the bar there is room for a stream of water to be forced through the bar, thus keeping it cool and forcing out the cuttings which pass through the passages G and H in the bar. The cutter drives lightly into the bar. By reason of one cutting edge not extending clear to the centre of the cutter there is formed a slight projection at the centre of the hole bored which serves as a guide to keep the cutter true, causing it to bore the hole very true.

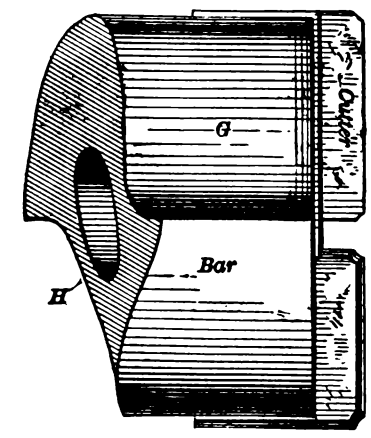

Fig. 1080.

For finishing the walls of holes more true, smooth, and straight, and of more uniform diameter than it is found possible to produce them with a drill, the reamer, or rymer, is employed. It consists of a hardened piece of steel having flutes, at the top of which are the cutting edges, the general form of solid reamer for lathe work being shown in Fig. 1083. The reamer is fed end-ways into the work at a cutting speed of about 15 to 18 feet per minute.

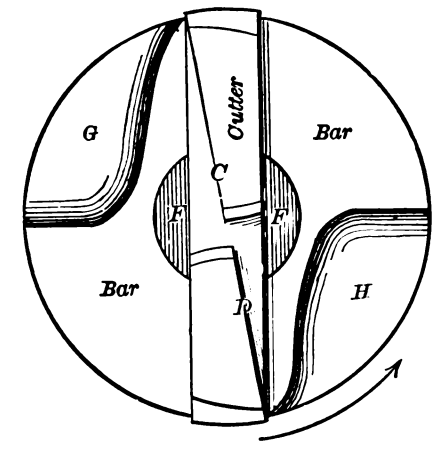

Fig. 1081.

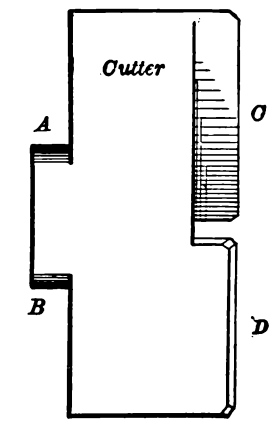

Fig. 1082.

The main considerations in determining the form of a reamer are as follows:—

1. The number of its cutting edges.
2. The spacing of the teeth.
3. The angles of the faces forming the cutting edges.
4. Its maintenance to standard diameter.

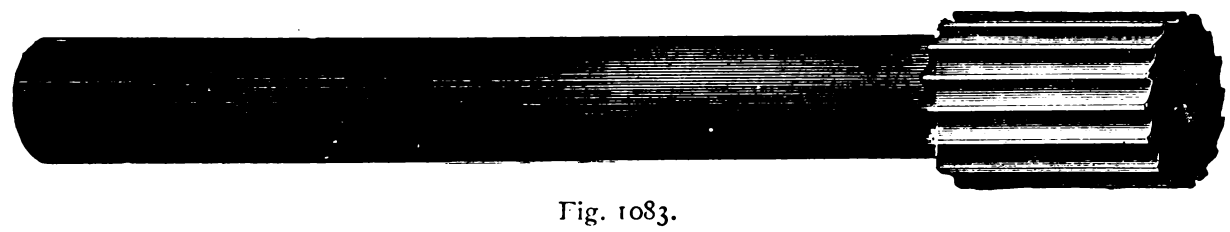

Fig. 1083.

As to the first, it is obvious that the greater the number of cutting edges the more lines of contact there are to steady it on the walls of the hole; but in any case there should be more than three teeth, for if three teeth are used, and one of them is either relieved of its cut or takes an excess of cut by reason of imperfections in the roundness of the hole, the other two are similarly affected and the hole is thus made out of round.

An even number of teeth will not work so steadily as an odd one, for the following reasons.

In Fig. 1084 is represented a reamer having 6 teeth and each of these teeth has a tooth opposite to it; hence, if the hole is out of round two teeth only will operate to enlarge its smallest diameter. In Fig. 1085 is a reamer having 7 teeth, and it will be seen that if any one tooth cuts there will be two teeth on the opposite side of the reamer that must also cut; hence, there are three lines of contact to steady the reamer instead of two only as in the case of the 6 teeth. An even number of teeth, however,

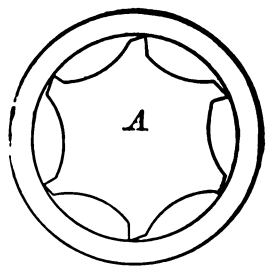

Fig. 1084.

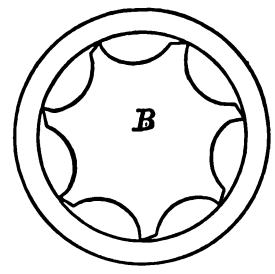

Fig. 1085.

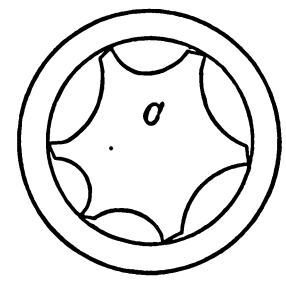

Fig. 1086.

may be made to operate more steadily by spacing the teeth irregularly, and thus causing three teeth to operate if the hole is out of round. Thus, in Fig. 1086 the teeth are spaced irregularly, and it will be seen that as no two teeth are exactly opposite, if a tooth on one side takes a cut there must be two on the opposite side that will also cut. The objection to irregular spacing is that the diameter of the reamer cannot be measured by calipers. Another method of obtaining steadiness, however, is to make the flutes and the cutting edges spiral instead of parallel to the axis, but in this case the spiral must be left-handed, as in Fig.

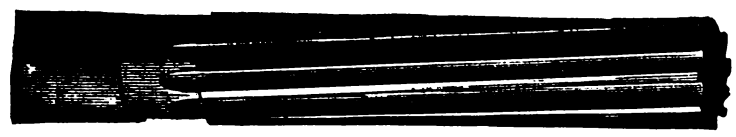

Fig. 1087.

1087, or else the cutting edges acting on the principle of a screw thread will force the reamer forward, causing it to feed too rapidly to its cut. If, however, a reamer have considerable degree of taper, it may be given right-hand flutes, which will assist in feeding it.

Referring to the second, the spacing of the teeth must be determined to a great extent by the size of the reamer, and the facility afforded by that size to grind the cutting edges to sharpen them.

The method employed to grind a reamer is shown in Fig. 1088, in which is shown a rapidly-revolving emery-wheel, above the

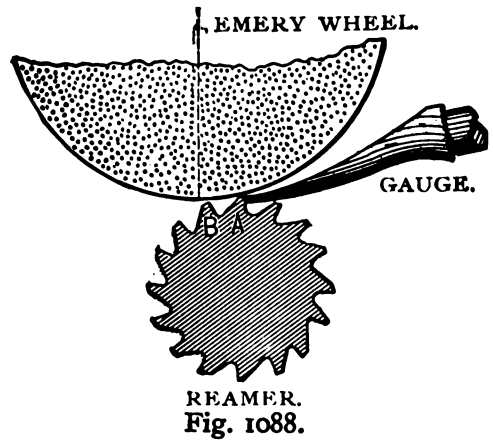

Fig. 1088.

reamer, and also a gauge against which the front face of each tooth is held while its top or circumferential face is being sharpened. The reamer is held true to its axis and is pushed end-ways beneath the revolving emery-wheel. In order that the wheel may leave the right-hand or cutting edge the highest (as it must be to enable it to cut), the axis of the emery-wheel must be on the left hand of that of the reamer, and the spacing of the teeth must be such that the periphery of the emery-wheel will escape tooth B, for otherwise it would grind away its cutting edge. It is obvious, however, that the less the diameter of the emery-wheel the closer the teeth may be spaced; but there is an objection to this, inasmuch as that the top of the tooth is naturally ground to the curvature of the wheel, as is shown in Fig. 1089, in which two different-sized emery-wheels are represented operating on the same diameter of reamer. The cutting edge of A has the most clearance, and is therefore the weakest and least durable; hence it is desirable to employ as large a wheel as the spacing of the teeth will allow, there being at least four teeth, and preferably six, on small reamers, and their number increasing with the diameter of the reamer.

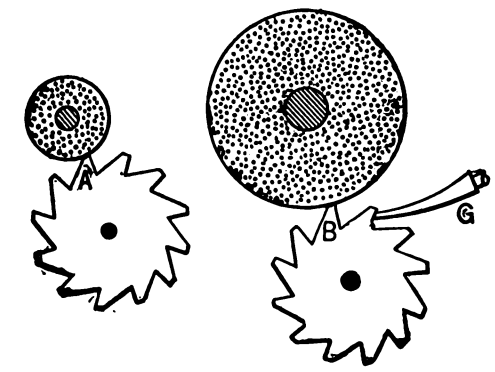

Fig. 1089.

It would appear that this defect might be remedied by placing the emery-wheel parallel to the teeth as in Fig. 1090; but if this were done, the wear of the emery-wheel would cause the formation of a shoulder at S in the figure, which would round off the cutting edge of the tooth. This, however, might be overcome by giving the emery-wheel enough end motion to cause it to cross and recross the width of the top facet; or the reamer R may be presented to the wheel W at an angle to the plane of wheel rotation, as in Fig. 1091, which would leave a straight instead of a curved facet, and, therefore, a stronger and more durable cutting edge.

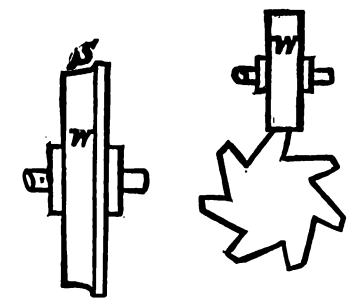

Fig. 1090.

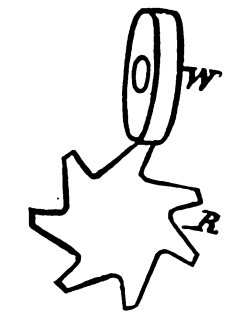

Fig. 1091.

Another method of accomplishing the same object would be to mount the emery-wheel as in Fig. 1092, using its side face, which might be recessed on the side, leaving an annular ring of sufficient diameter to pass clear across the tooth, and thus prevent a shoulder from forming on the side face of the wheel.

Yet another method is to use an emery-wheel bevelled on its edge, and mount it as in Fig. 1093, in which case it would be preferable to make the bevel face narrow enough that all parts would cross the facet of the tooth.

Referring to the third, viz., the angles of the faces forming the

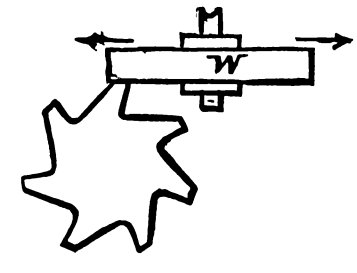

Fig. 1092.

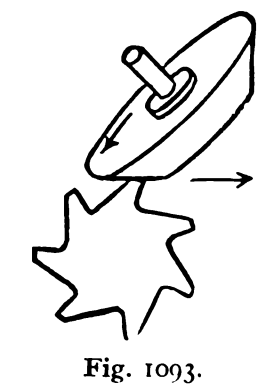

Fig. 1093.

cutting edges, it is found that the front faces, as A and B in Fig. 1094, should be a radial line, for if given rake as at C, the tooth will spring off the fulcrum at point E in the direction of D, and cause the reamer to cut a hole of larger diameter than itself, an action that is found to occur to some extent even where the front face is a radial line. As this spring augments with any increase

of cut-pressure, it is obvious that if a number of holes are to be reamed to the same diameter it is essential that the reamer take the same depth of cut in each, so that the tooth spring may be equal in each case. This may be accomplished to a great extent

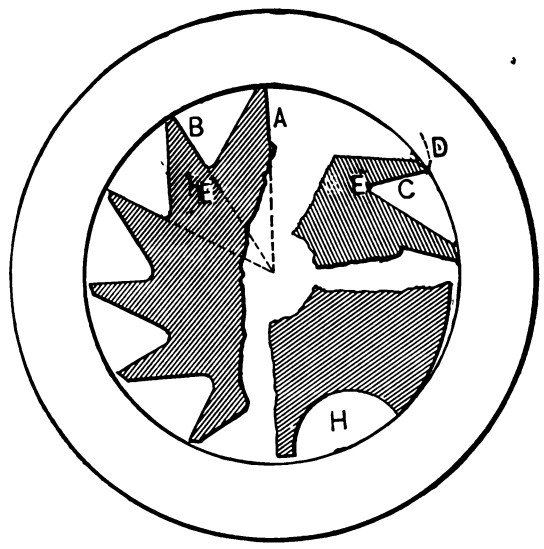

Fig. 1094.

by using two reamers, one for equalizing the diameters of the holes, and the other for the final finishing. The clearance at the top of the teeth is obviously governed by the position of the reamer with relation to the wheel, and the diameter of the wheel, being less in proportion as the reamer is placed farther beneath the wheel, and the wheel diameter is increased. In some forms of reamer the

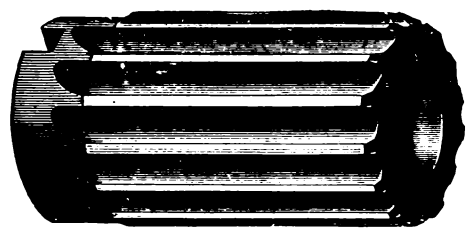

Fig. 1096.

teeth are formed by circular flutes, such as at H in Fig. 1094, and but three flutes are used. This leaves the teeth so strong and broad at the base that the teeth are not so liable to spring; but, on the other hand, the clearance is much more difficult to produce and to grind in the resharpening.

As to the maintenance of the reamer to standard diameter, it is a matter of great importance, for the following reasons: The great advantage of the standard reamer is to enable holes to be made and pieces to be turned to fit in them without requiring any particular piece to be fitted to some particular hole, and in order to accomplish this it is necessary that all the holes and all the pieces be exactly alike in diameter. But the cutting edges of the reamer begin to wear—and the reamer diameter, therefore, to reduce—from the very first hole that it reams, and it is only a question of time when the holes will become too small for the turned pieces to enter or fit properly. In all pieces that are made a sliding or a working fit, as it is termed when one piece moves upon the other, there must be allowed a certain latitude of wear before the one piece must be renewed.

One course is to make the reamer when new enough larger than the proper size to bore the holes as much larger as this limit of wear, and to restore it to size when it has worn down so that the holes fit too tightly to the pieces that fit them. But this plan has the great disadvantage that the pieces generally require to have other cutting operations performed on them after the reaming, and to hold them for these operations it is necessary to insert in them tightly-fitting plugs, or arbors, as they are termed. If, therefore, the holes are not of equal diameter the arbor must be fitted to the holes, whereas the arbor should be to standard diameter to save the necessity of fitting, which would be almost as costly as fitting each turned piece to its own hole. It follows, therefore, that the holes and arbors should both be made to a certain standard, and the only way to do this is to so construct the reamer that it may be readily adjusted to size by moving its teeth.

It is obvious that a reamer must, to produce parallel holes, be held axially true with the holes, or else be given liberty to adjust itself true. Fig. 1095 shows a method of accomplishing this object. The reamer is made to have a slight freedom or play in the sleeve, being $\frac{1}{32}$ inch smaller, and the hole for the pin is also made large so that the reamer may adjust itself for alignment.

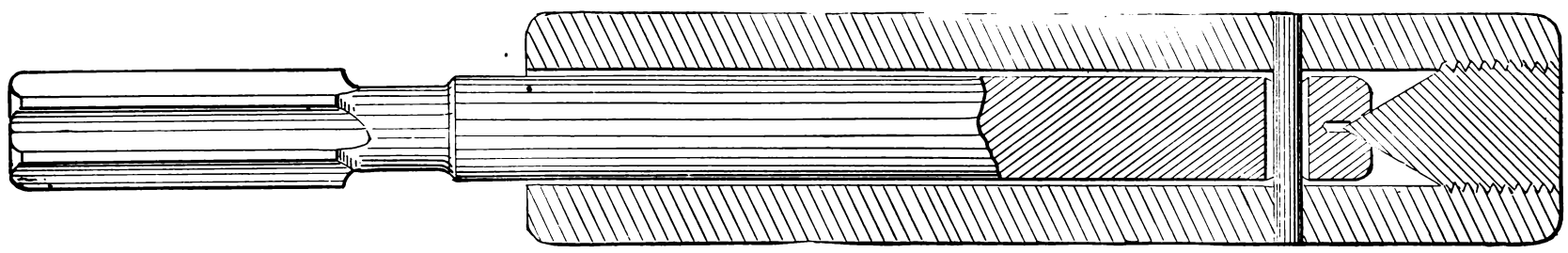

Fig. 1095.

For short holes the shell reamer shown in Fig. 1096 may be employed. Its bore is coned so that it will have sufficient friction upon its driving arbor to prevent its coming off; when it is to be withdrawn from the work it is provided with two slots into which fit corresponding lugs on the driving arbor. Fig. 1097 shows the the Morse Twist Drill and Machine Company's arbor.

The rose reamer, or rose bit, has its cutting edges on the end only, as shown in Fig. 1098, the grooves being to supply lubricating material (as oil or water) only, and, as a result, will bore a more parallel hole than the ordinary reamer in cases in which the reamer has liberty to move sideways, from looseness in the mechanism driving it. Furthermore, when the work is composed of two parts, the outer one, through which the reamer must pass before it meets the inner one, guides the reamer without becoming enlarged by reason of the reamer having cutting edges, which is especially advantageous when the inner hole requires to be made true with the outer one, or in cases where a piece has two holes with a

Fig. 1097.

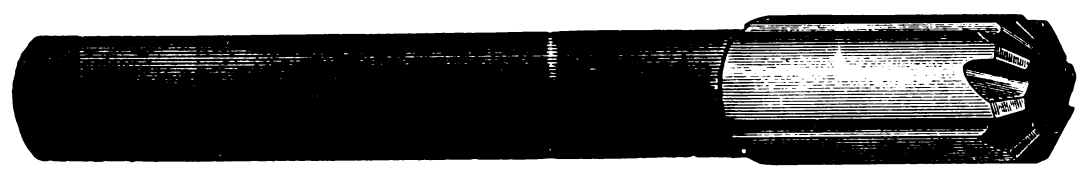

Fig. 1098.

space between them, and one hole requires to be made true with the other, and both require to be made to the same diameter as the reamer.

Fig. 1099 represents the Morse Twist Drill Company's shell rose reamer for short holes, corresponding in principle to the solid rose reamer, but fitting to an arbor for the same purposes as the shell reamer.

Instead of having upon a reamer a flat tooth top to provide clearance, very accurate and smooth work may be produced by letting the back of the tooth, as A in Fig. 1100, proceed in a straight line to B, leaving the reamer, when soft, too large, so that after hardening it may be ground by an emery-wheel to size; and the clearance may be given by simply oilstoning the top of each tooth lengthwise, the oilstone marks barely effacing the emery marks at the cutting edge and removing slightly more as the back of the tooth is approached from the cutting edge. This produces cutting edges that are very easily fed to the cut, which must

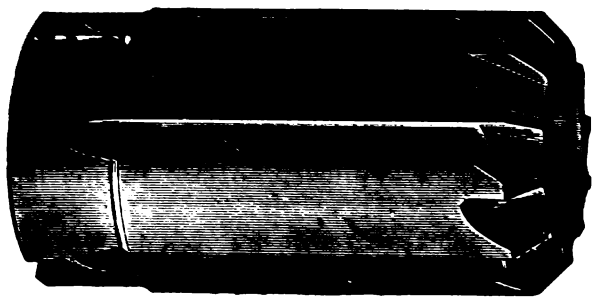

Fig. 1099.

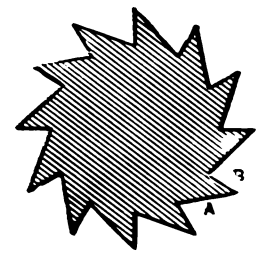

Fig. 1100.

obviously, however, be a light one, as should always be the case for finishing, so that the wear of the teeth may be a minimum, and the reamer may therefore maintain its standard diameter as long as possible.

When a solid reamer has worn below its required diameter, the same may be restored by upsetting the teeth with a set chisel, by driving it against the front face; and in determining the proper diameter for a reamer for work to be made to gauge under the interchangeable system the following considerations occur.

Obviously the diameter of a reamer reduces as it wears; hence there must be determined a limit to which the reamer may wear before being restored to its original diameter. Suppose that this limit be determined as $\frac{1}{1000}$ inch, then as the reamer wears less in diameter the bolts to fit the holes it reams must also be made less as the reamer wear proceeds, or otherwise they will not enter the reamed holes. But it is to be observed that while the reamer

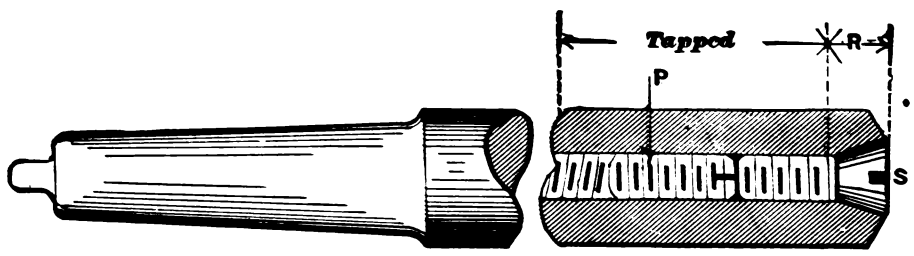

Fig. 1101.

wears smaller, the standard gauges to which the pins or bolts are turned wear larger, and the wear is here again in a direction to prevent the work from fitting together. It is better then to make the reamer when new too large to the amount that has been determined upon as the limit of wear, so that when the work begins to go together too tight, the reamer requires resharpening and restoring.

A still better plan, however, is to use reamers adjustable for diameter, so that the wear may be taken up, and also the reamer sharpened, without being softened, which always deteriorates the quality of the steel.

Reamers that are too small to be made adjustable for size by a combination of parts may be constructed as in Fig. 1101, in which the reamer is drilled and threaded, and countersunk at the end to receive a taper-headed screw S, which may be screwed in to expand the reamer, which contains three longitudinal splits to allow it to open. To cause S to become locked in its adjusted position a plug screw P is inserted for the end of S to abut against. It is obvious that in this form the reamer is expanded most at the end.

Fig. 1102 represents a single-tooth adjustable reamer, in which the body A is ground to the standard diameter, and the wear of the cutter C is taken up by placing paper beneath the cutter. In this case the reamer cannot, by reason of the wear of the cutting edge, ream too small, because the body A forms a gauge of the smallest diameter to which the reamer will cut. The cutter may, however, be set up to the limit allowed for wear of cutting edge, which for work to fit should not be more than $\frac{1}{5000}$ inch.

An adjustable reamer designed and used by the author for holes not less than 1½ inches in diameter, is shown in Fig. 1103, in which A represents the body of the reamer containing dovetail

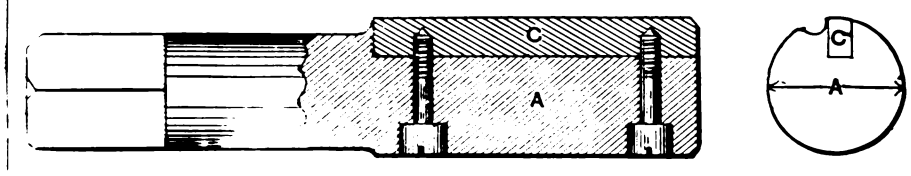

Fig. 1102.

grooves tapered in depth with the least depth at the entering end. The grooves receive cutters B, having gib heads. C is a ring or washer interposed between the gib heads of the cutter and the face or shoulder of A, the cutters being locked against that face by a nut and a washer E. By varying the thickness of C, the cutters are locked in a different position in the length of the grooves, whose taper depth therefore causes the cutters to vary in diameter. Suppose, for example, that with a given thickness of washer C, the cutters are adjusted in diameter so as to produce a hole a tight working fit to a plug turned to a 2-inch standard gauge: a slightly thinner washer may be used, setting the cutters so as to bore a hole an easy working fit to the plug; or a slightly thicker washer may be employed so as to produce a hole a driving fit to

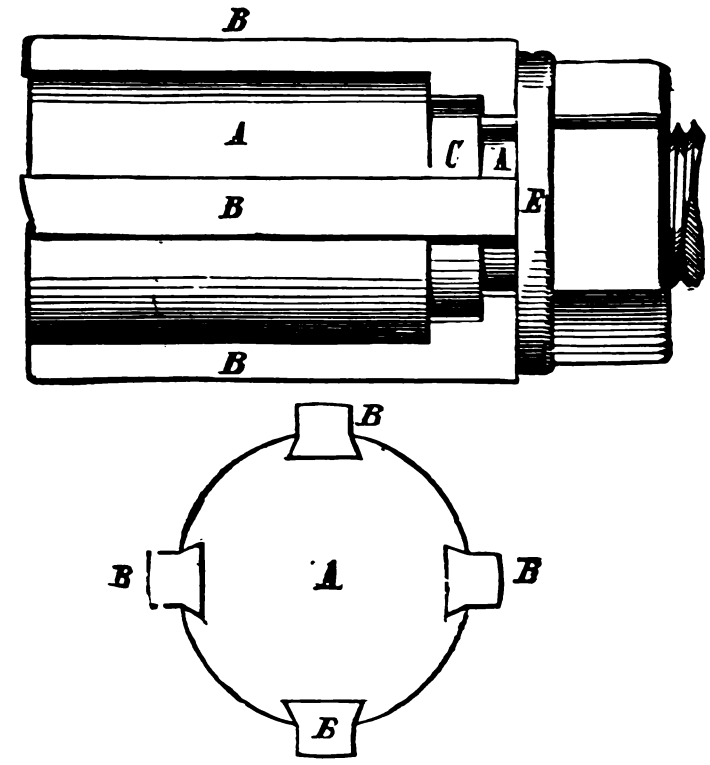

Fig. 1103.

the same plug. Three or more washers may thus be used for every standard size, their thickness varying to suit the nature of the fit required.

It will be noted that it is mentioned that three *or more* washers may be used, and this occurs because a diameter of fit that would be a driving fit for a hole of one length would be too tight for a driving fit of a much longer hole, the friction of course increasing with the length of hole, because of the increase of bearing area.

For large sizes, a reamer of this description is an excellent tool, because if it be required to guide the reamer by means of a plain cylindrical shank, a washer, or sleeve, having a bore to fit the shank at the termination of the thread, may be used, but such a

reamer is not suitable for small diameters, because of the reduction of shank necessary to provide for the nut and thread.

Reamers for roughing out taper holes may be made with steps, as in Fig. 1104, which is taken from *The American Machinist*, there being a cutting edge where each step meets a flute. Such a reamer may be used to enlarge parallel holes, or to rough out

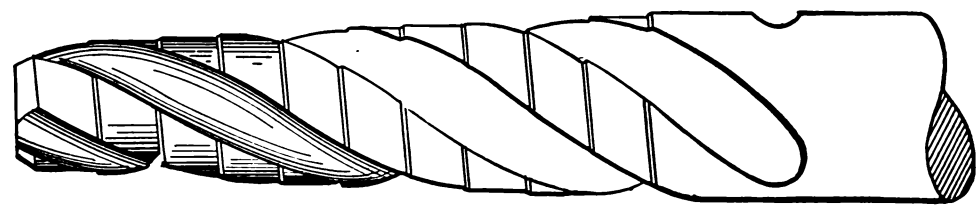

Fig. 1104.

taper ones, and the flutes (if not to be used for brass work) may be spiral, as in the figure. The end step being guided by the hole serves as a guide to the first cutting edge; the second step serves as a guide for the cutting edge that follows it, and so on.

The steps are best turned a trifle larger, say $\frac{1}{1000}$ inch larger, at the cutting end. Half-round taper reamers, such as shown in

Fig. 1105.

Fig. 1105, are used for finishing holes. The flat face is cut down, leaving rather more than a half circle; the clearance being filed or ground on the cutting side so as to enable the reamer to cut, and extending from the cutting edge to nearly half-way to the bottom of the reamer.

For holes, however, that are large enough to admit a tool of sufficient strength, the single-pointed boring tool produces the most true work.

Brass finishers use square taper reamers, which produce upon brass more true work than the half-round reamer.

For reaming the bores of rifles, a square reamer, such as shown

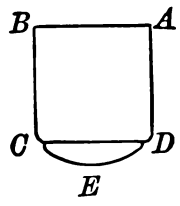

Fig. 1106.

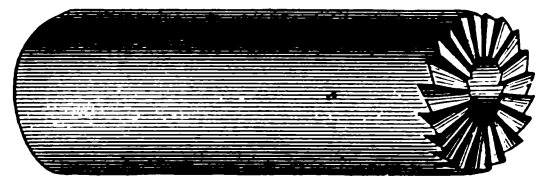

Fig. 1107.

in Fig. 1106, is employed; the edges A B are the cutting ones, the edges C D being rounded off; E is a piece of wood, beneath which slips of paper are placed to restore the size as the wear proceeds. The entering end of the reamer is slightly tapered. On account of the extreme length of this reamer in proportion to its diameter, it is fed to its cut by being pulled instead of pushed as is usually the case, the pull placing the rod of the reamer under tension and thus stiffening it; the line of pull is of course true with the

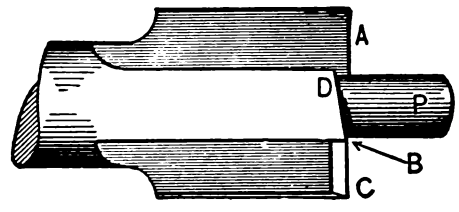

Fig. 1108.

axis of the rifle bore. The reamer is revolved at high speed and freely supplied with oil.

By means of the slips of paper successive cuts and minute increases of diameter may be taken with the same reamer.

Fig. 1107 represents a class of rose bit employed to reduce pins to a uniform diameter, and face off the shoulder under the head, or it may be used to cut a recess round a pin, or to cut a recess and leave a pin.

For making a recess round a hole, or, in other words, for cutting a flat-bottom countersink, a facing countersink, Fig. 1108,

may be used, its cutting edges being at A, B, C, &c. The clearance is given at the ends of the teeth only, being shown from B to D. The pin P steadies the tool, and is made a working fit to the hole in the work. Or if too small, a ferrule may be placed upon it, thus increasing the capacity of the tool. When a tool of this kind is to be used on iron, steel, or copper, and not upon brass, the front face of the teeth may be given rake by cutting the grooves at an angle, as in Fig. 1109.

BORING TOOLS FOR LATHE WORK.—The principal object in forming a boring tool to be held in a slide rest is to have the body of the tool as large as can be conveniently got into the size of the hole to be bored; hence the cutting edge should not stand above the level of the top of the steel. By this means the tool will be as stiff as possible, and less liable to spring away from its cut, as boring tools are apt to do, especially when the cut or hole is a long one.

It is so difficult a matter to bore a long hole parallel with a long boring tool that cutters of various forms are usually preferred, and these will be described hereafter.

The boring tool is, upon cast iron and brass, exceedingly liable

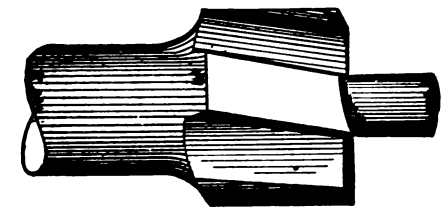

Fig. 1109.

to chatter, but this may always be avoided by making the angles forming the cutting edge less acute: thus, in Fig. 1110 are three boring tools, A, B, C, operating in a piece of work D. Now the lateral pressure of a cut is exerted upon the tool at a right angle to the length of the cutting edge; hence (in addition to the vertical pressure) the lateral pressure of the tool A will be in the direction of the dotted line and arrow A, that on B in the direction of dotted line and arrow B, and that on C in the direction of dotted

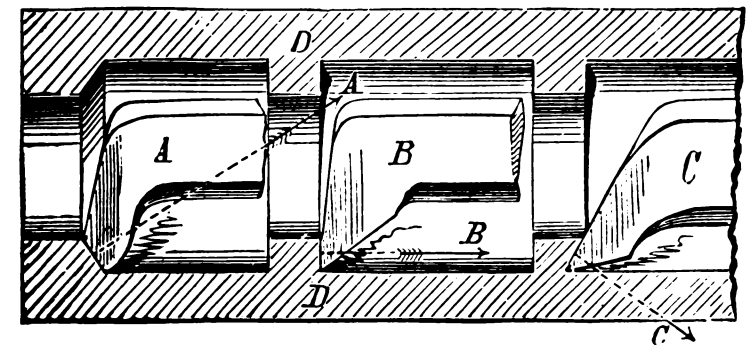

Fig. 1110.

line and arrow C; hence the pressure of the cut would tend to force A towards the centre of the hole and off or away from its cut, B back from its cut, and C deeper into its cut. Now as the cut proceeds, the tool edge dulls, hence it would appear that a compromise between C and B would be the most desirable, as giving to the tool enough of the tendency to deepen its cut to compensate for the tendency to spring away from its cut, as the cutting edge dulls (which it does from the moment the cut begins)

This is quite practicable in tools to be used on wrought iron, as shown in Fig. 1111, which represents the most desirable form.

In this form the part of the cutting edge performing duty under a deep cut will be mainly in front of the tool, but in light cuts the cutting edge would be farther back, where it is more nearly parallel to the line of the work bore, and will hence cut smoother.

Where a boring tool is intended for light cuts only on wrought

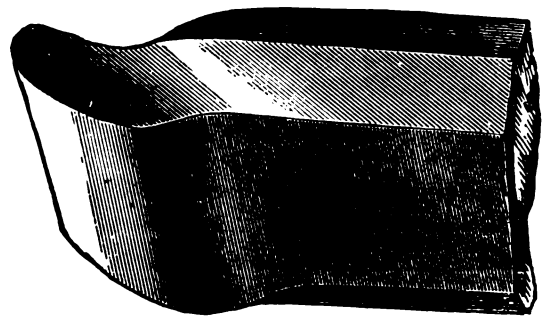

Fig. 1111.

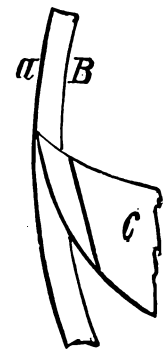

Fig. 1112.

iron it may have all, or nearly all, its rake at the top, as shown in Fig. 1112, from *a* to B representing the cut, and C the tool.

Under ordinary conditions that in the form of tool shown in Fig. 1113* is best for brass work, the face A being horizontal or slightly depressed towards the point. Boring tools require very little bottom rake, and the cutting points should be as rounded as they can be made without chattering. On wrought iron the top rake may be as much as is consistent with strength, and water should be freely applied to the cut. For cast iron the best form of tool is that shown in Fig. 1114, the edge A being parallel

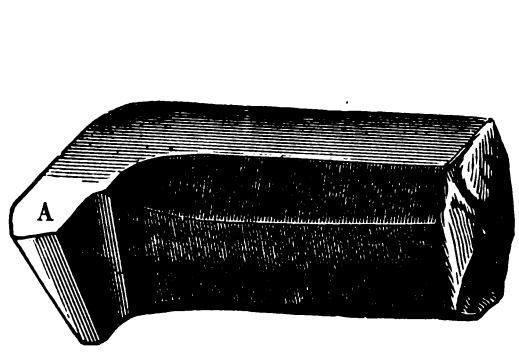

Fig. 1113.

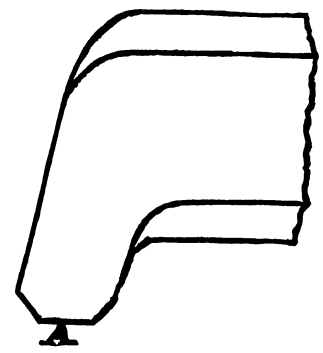

Fig. 1114.

with the bore of the hole, and the feed being a coarse one, taking a very light cut when finishing.

In cases, however, where the tool point requires to cut up to a sharp corner, the form of tool shown in Fig. 1115 (which represents a top and end view) may be used. Its end face C is at an obtuse angle to the length of the tool, so that on passing up a bore and meeting a radial face the point only will meet that face. This angle, however, gives to the tool a keenness that will cause chattering on brass work unless the top face be bevelled to the tool body, as is A to B in the figure.

It frequently happens in boring cast iron that the skin or the

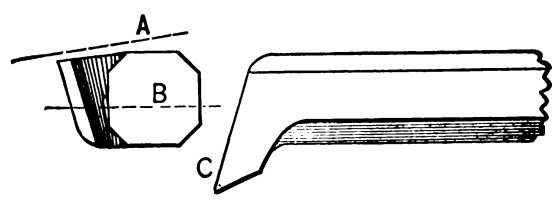

Fig. 1115.

surface of the metal is very hard, rapidly dulling the tool and forcing it away from its cut, unless the cut is deep enough to allow the point of the tool to cut beneath it, as shown in Fig. 1116, in which the hardness is supposed to extend from the bore to the dotted line.

In this case a tool formed as at C is employed, the point cutting in advance of the rest of the tool, and entering the soft metal beneath the hard metal; the hard metal will then break away in lumps or pieces, without requiring to be absolutely cut into chips or turnings, because of being undercut, as shown at B.

* From "The Complete Practical Machinist."

The cross slider or tool rest of a lathe should be adjusted to closely fit the cross slide of the lathe if true and parallel work is to be bored, because any lost motion that may exist in the slide is multiplied by the length the tool stands out from the tool post. Thus the centre of motion of the rest if it has play, as at B, Fig. 1117, and the direction of motion at the tool point, will be an arc of a circle of which B is the centre, the bend of the tool from the pressure of the cut will have its point of least motion or fulcrum at A; hence, both tend to cause the tool point to dip and spring unequally under the varying cut pressure that may arise from hard or soft places in the metal, and from inequalities in the cut depth.

The pressure of the cut increases as the tool point loses its sharpness, and this makes sufficient difference for the amount of

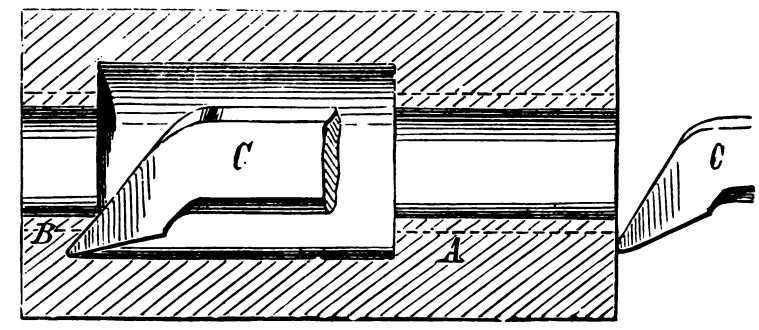

Fig. 1116.

tool spring in light boring tools or in long holes to cause the tool to bore a larger hole at the beginning than it does at the end of its feed traverse; or, in other words, to bore a taper hole, whose largest end is that at which the cut was started. If, therefore, the cut is traversed from the front to the back of the hole the latter will be of the smallest diameter at the back, and conversely if the cut proceeds from the back to the front of the hole the front will be of smallest diameter. The amount of the taper so caused (or in other words the error from parallelism) will obviously increase with the length of the hole.

To obviate this taper, the slide of the rest should for the finishing cut be set up firmly, and the tool after being sharpened should take a finishing cut through the hole, and then let traverse

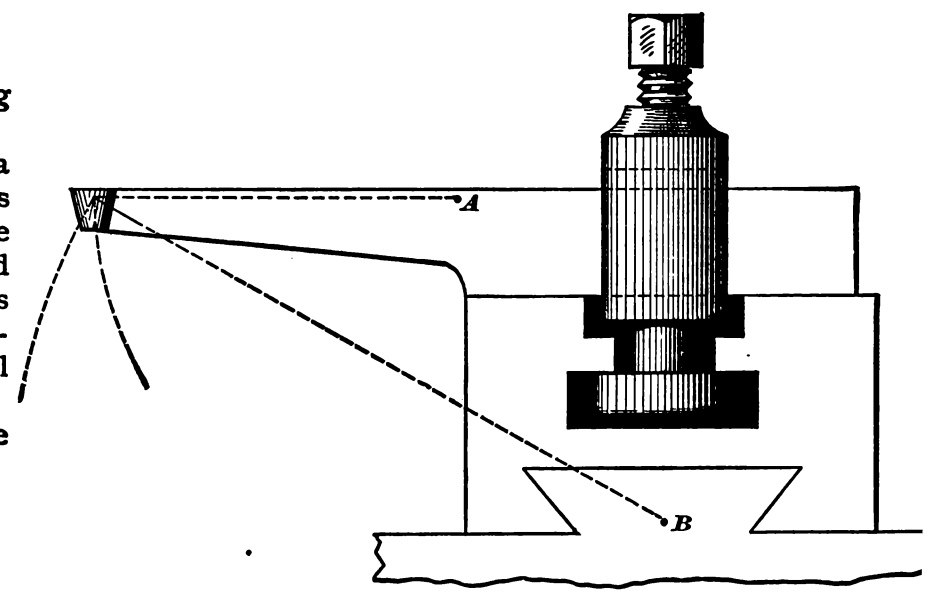

Fig. 1117.

back, which can be done providing that care be taken not to bore the hole too large.

A boring tool will take a smoother cut and chatter less if the final cut be from the back to the front of the hole, and for the following reasons: When the tool is fed in, the strain or pressure of the cut is in a direction to partly compress and partly bend the steel which is being pushed to its cut, but when it is fed in the opposite direction it is pulled to its cut and the strain is in a direction to stretch the steel, and this the tool is more capable of resisting, hence it does not so readily vibrate to cause chattering.

In consequence, however, of the liability of a boring tool to spring away from its cut, it is far preferable to finish holes with standard cutters, reamers, or bits, in which case the boring tool may be

employed to rough out and true up the hole, leaving a *fine* cut for the finishing cutter or bit, so as to wear its cutting edge as little

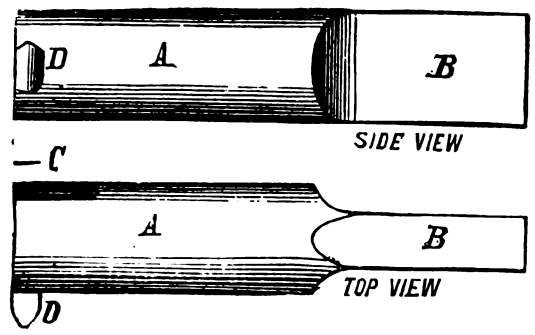

Fig. 1118.

as possible. To further attain this latter object, the cutter or bit should be used at a slow cutting speed and with a coarse feed.

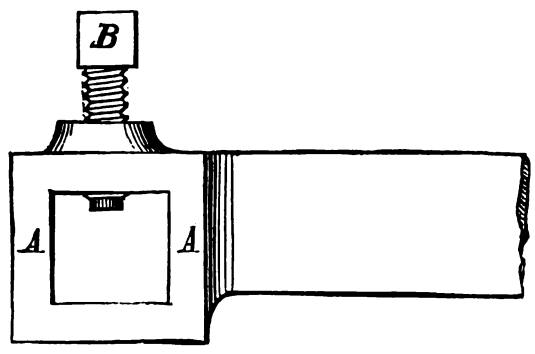

Fig. 1119.

If cutters or bits are not at hand, tool holders are desirable, and the forms of these depend upon the nature, or rather the diameter,

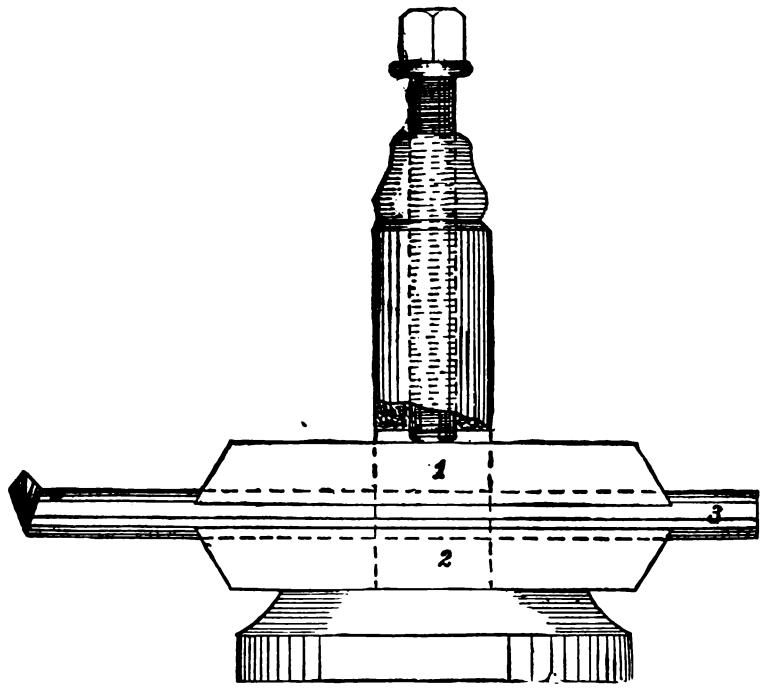

Fig. 1120.

of the hole to be bored. In all cases, however, the best results will be obtained when the diameter of the tool holder is as near that of the hole to be bored as will give it clearance. This occurs on account of the rigidity of the holder being greater than that of the tool.

For large work tool holders are desirable, in that the tools, being short, are easier to forge, to handle, and to grind.

For example, a tool holder of a cross section of two inches square may contain a tool whose cross section is 1 by $\frac{3}{4}$ inch, in which case it is necessary to forge, grind, &c., the small tool only, whereas in the absence of the holder the tool would require to be of a cross section equal to that of the holder to obtain an equal degree of rigidity.

A boring tool holder suitable for holes of from 2 to 4 or 5 inches is shown in Fig. 1118, in which A represents a round bar shaped at the end B to fit into the tool post of the slide rest, and having a groove across the diameter of the end C D to receive a short tool. The slot and tool may be either square or V-shaped, the tool being locked by a wedge. It is obvious that instead of shaping the end B as shown, the bar may be held (if the slide-rest head is provided with a clamp instead of a tool post) by two diametrically opposite flat faces.

For holes of a greater diameter a holder such as shown in Fig. 1119 should be used, the body being a square bar, and the tool being held in the box A A by two set screws B. For holes of small diameter, as, say, less than $1\frac{1}{2}$ inches, a tool holder is especially desirable, because when a boring tool is forged out of a piece of tool steel, its length is determined, and in order to have tools suitable for various depths of hole a number of tools of varying lengths are requisite. Suppose, for example, that a piece of steel be forged into a boring tool suitable for a hole of an inch diameter, and 4 inches deep, then the steel must be forged round for a distance of at least 4 inches from the cutting end, and if such a tool were applied to a hole, say, two inches deep, the cutting edge would stand out from the tool post at least two inches more than is necessary, which would cause the employment of a tool weaker than necessary for the work. To enable the use of one tool for various depths of work, and yet hold it in each case as close to the tool post as the work depth admits, tool-clamping devices, such as in Fig. 1120 (which are extracted from *The American Machinist*), are employed. 1 and 2 are pieces of steel fitting in the tool post and clamping the tool, which for very small holes is made of octagon or round forged steel. The tool may be passed to any required distance through the clamp, so as to project only to the amount necessary for the particular depth of hole requiring to be bored. These clamping pieces 1 and 2 should bed upon the tool fairly along their full length; or, what is better, they may bed the firmest at their extremities, which will insure that the tool is gripped firmly as near to the cutting edge as possible.

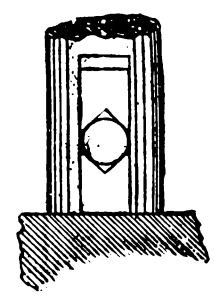

In place of a steel tool, a tool holder turned cylindrically true and parallel may be used to carry a short boring tool, as shown in Fig. 1121, in which A is the tool secured by the set-screw B into the holder C. The latter may be provided with a line running true longitudinally, and may have a fine groove similar to a thread, and having a pitch measuring some part of an inch, as $\frac{1}{8}$, $\frac{1}{4}$, $\frac{1}{2}$ inch, &c., so that the distance the tool projects from the holder may be known without measuring the same. But when a tool and holder of this description are used, the tool cannot be employed unless the hole passes entirely through the work, which occurs because of the presence of the set-screw B.

It is obvious that for a tool-holding bar such as this, a clamping device such as shown in Fig. 1120 is requisite, and that the position of the clamping device may be adjusted to suit the work by setting it more or less through the tool post.

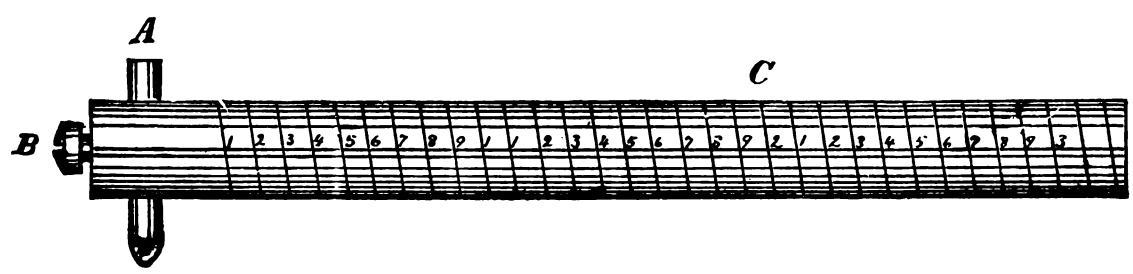

Fig. 1121.

The manner in which the deflection of a boring tool will affect the bore of the work depends upon the height of the boring tool in the work. If the tool is above the horizontal centre of the work, as in Fig. 1122, the spring vertically will cause it to leave the cut, and bore the hole to a corresponding amount smaller; and since the tool gets duller as the wear proceeds, it will spring more at the

latter end of each tool traverse, leaving the end of the hole last cut of smallest diameter.

If, on the other hand, the tool be below the horizontal centre, as in Fig. 1123, the vertical spring will be in a direction to increase the amount of the cut, and thus offset the tapering effect of the increased tool spring due to the wear of the tool. Furthermore, the shaving will be easier bent if the tool be below than if above the horizontal centre, because the metal will be less supported by the metal behind it. It is always desirable therefore to have the cutting edge of a boring tool used on small work below rather than above the horizontal centre of the work. On large work, however, as say, having a bore of

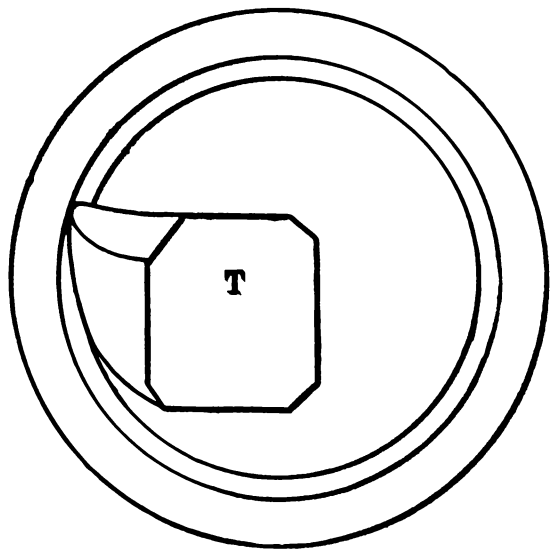

Fig. 1122.

6 inches and over, the curve of the bore in the length of the circumference affected by the cut or bending of the cut is so small, that the height of the tool is of less consequence.

To enable the use of a stout-bodied boring tool, while keeping its cutting edge below the centre, the top face of the tool may be depressed, as shown in Fig. 1123.

An excellent attachment for boring parallel holes is shown in Figs. 1124 and 1125, in which there is fixed to the cross slide A the bracket B, which is bored to receive a number of bushes C, whose bores are made to suit varying diameters of boring-bars or reamers D. The hub of the bracket is split on one side to enable

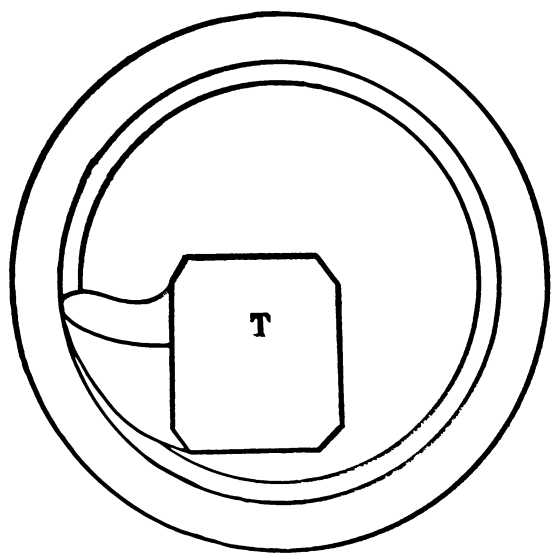

Fig. 1123.

it to be closed (by the bolt *e*) upon the bush C and grip it firmly, the bush also being split at *f*. The bracket B is provided with a taper pin G, which brings it in position upon the slide so that the bushes C are true with the line of lathe centres. It is also provided with the screws H, which lock it firmly to the cross slide and prevent any spring or movement from play or looseness.

When the bracket is adjusted and the bar fastened up (by screw *e*), the lathe-carriage feeds the boring tool to the cut in the usual manner. Now suppose that, as shown in our illustrations, a pulley P requires to be bored, and the boring tool or reamer may be set to have its cutting end stand out just as far as the length of the hub requires, and no farther, so that the bar will be held and supported as close to the pulley hub as is possible from the nature of the job. There need not be a separate bush for every size of reamer, because the bodies of several size bars may fit to one size of bush, especially if the set of reamers for every size of bush be

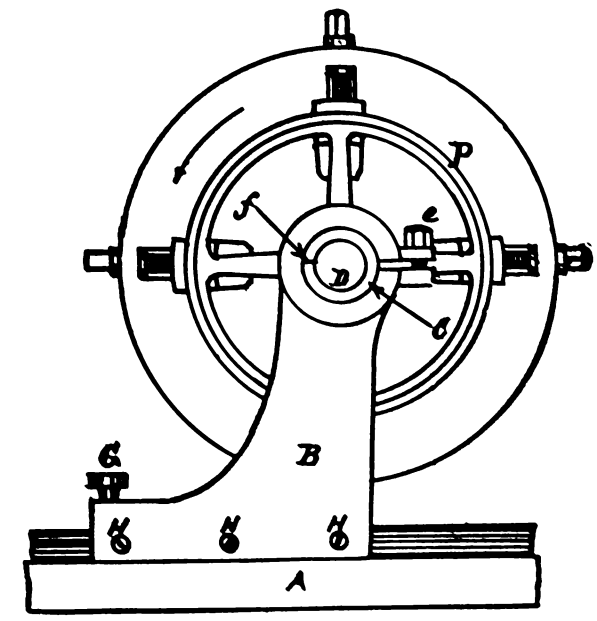

Fig. 1124.

made with its smallest size equal to the bore of the bush; because in that case the whole of the set may be adjusted to bore any required depth of hole by sliding the reamer through the bush to the required distance. If there are a number of lathes in a shop, each lathe may have its own bracket B, all these brackets being

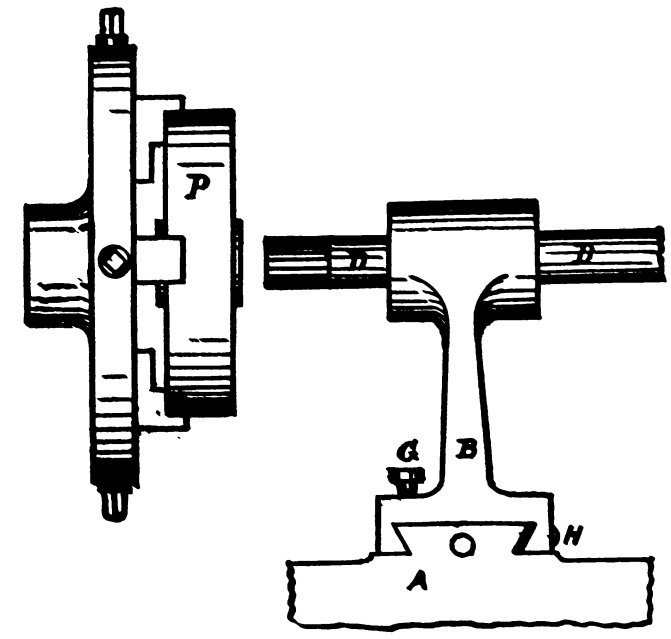

Fig. 1125.

bored to receive the same bushes, and therefore the same boring-bars or reamers.

A bracket or stand of this kind may obviously be used to carry a bar, having a head such as is shown in Fig. 1126, each dovetail groove carrying a cutting tool, and for wrought iron or steel

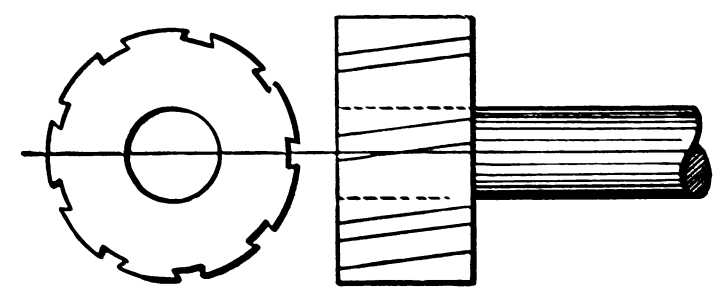

Fig. 1126.

work these grooves may be at an angle to the bar axis, as in the figure, to give each cutter front rake, and increase its keenness.

BORING BARS FOR LATHE WORK.—Boring bars for lathe work are of two kinds, those in which the cutters are held in a fixed position in the length of the bar, and those in which the cutters are held in a head which traverses along the work. The former

are the least desirable, because they require to be more than twice the length of the work, which must be on one side of the cutter at the commencement of the cut, and on the other at the termination of the same. But to traverse the head carrying the tools along the bar necessitates a feed screw either within the bar or outside of it. If within, the metal removed to give it place weakens the bar, while in small holes there is no room for it; hence solid bars with fixed cutting tools are used for small holes, and tools held in a traversing head for those sufficiently large to give room for a head without weakening the bar too much. A boring bar is best driven from both ends.

"The boring bar is one of the most important tools to be found in a machine shop, because the work it has to perform requires to be very accurately done; and since it is a somewhat expensive tool to make, and occupies a large amount of shop room, it is necessary to make one size of boring bar answer for as many sizes of hole as possible, which end can only be attained by making

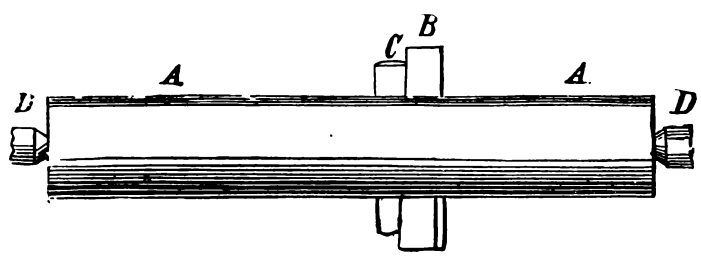

Fig. 1127.

it thoroughly stiff and rigid. To this end a large amount of bearing and close fitting, using cast iron as the material, are necessary, because cast iron does not spring or deflect so easily as wrought iron; but the centres into which the lathe centres fit are, if of cast iron, very liable to cut and shift their position, thus throwing the bar out of true. It is, therefore, always preferable to bore and tap the ends of such bars, and to screw in a wrought-iron or steel plug, taking care to screw it in very tightly, so that it shall not at any time become loose. The centres should be well drilled and of a comparatively large size, so as to have surface enough to suffer little from wear, and to well sustain the weight of the bar. The end surface surrounding the centres should be turned off quite true to keep the latter from wearing away from the high side, as they would do were one side higher than the other."*

The common form of the smaller sizes of boring bar is that shown in Fig. 1127. A A being the bar, D D the lathe centres, B

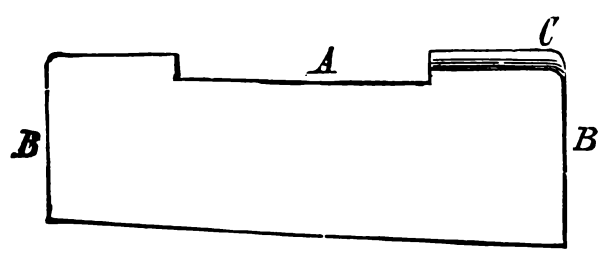

Fig. 1128.

the cutter passing through a slot or keyway in the bar, and C a key tapered (as is also the back edge of the cutter) to wedge or fasten the cutter to the bar. It is obvious that, if the cutter is turned up in the bar, and is of the exact size of the hole to be bored, it will require to stand true in the bar, and will therefore be able to cut on both ends, in which case the work may be fed up to it twice as fast as though only one edge were performing duty. To facilitate setting the cutter quite true, a flat and slightly taper surface should be filed on the bar at each end of the keyway, and the cutter should have a recess filed in it, as shown in Fig. 1128, the recess being shown at A, and the edges B B forming the diameter of the cutters. The backing off is shown at C, from which it will be observed that the cutting duty is performed by the edge C, and not along the edge B, further than is shown by the backing off. The recess must be made taper, and to fit closely to the flat places filed on the bar. Such a cutter, if required to be adjustable, must not be provided with the recess A, but must be left plain, so that it may be made to extend out on one side of the bar to cut

* From "The Complete Practical Machinist."

any requisite size of bore; it is far preferable, however, to employ the recess and have a sufficient number of cutters to suit any size of hole, since, as already stated (there being in that case two cutting edges performing duty), the work may be fed up twice as fast as in the former case, in which only one cutting edge operates.

Messrs. Wm. Sellers and Co. form the cutters for their celebrated car wheel boring bar machine as in Fig. 1129, the bottom or plain edge performing the cutting. By this means the recess to fit the bar is not reduced in depth from sharpening the tool. The tool is sharpened by grinding the ends of the lower face as shown by the unshaded parts, and the cutter is said to work better after the cutting part has begun to be oblique from grinding.

The cutter is hardened at the ends and left soft in the middle, so that the standard size of the cutter may be restored when

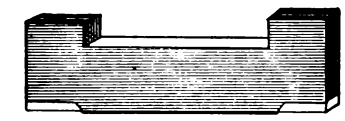

Fig. 1129.

necessary, by pening and stretching the soft metal in the middle. These cutters will bore from 50 to 250 car wheels, without appreciable reduction of size.

The description of bar shown in Fig. 1127 may be provided with several slots or keyways in its length, to facilitate facing off the ends of work which requires it. Since the work is fed to the cutter, it is obvious that the bar must be at least twice the length of the work, because the work is all on one side of the cutter at the commencement, and all on the other side at the conclusion of the boring operation. The excessive length of bar, thus rendered necessary, is the principal objection to this form of boring bar, because of its liability to spring. There should always be a keyway, slot, or cutter way, near to the centre of the length of the bar, so as to enable it to bore a hole as long as possible in proportion to the length of the boring bar, and a keyway or cutter way at each end of the bar, for use in facing off the end faces of the work.

If a boring bar is to be used only for work that does not require facing at the ends, the cutter, slot, or keyway should be placed in such position in the length of the bar as will best suit the work (keeping in mind the desirability of having the bar as short as possible), and the bar should be tapering from the middle towards each end, as shown in Fig. 1130. This will make the bar stronger in proportion to its weight, and better able to resist the pressure of the cut and the tendency to deflect. The parallel part at A is to receive the driving clamp, but sometimes a lug cast on at that end is used instead of a clamp.

For bores too large to be bored by the bar alone, a tool-carrying head is provided, being sometimes fixed upon the bar by means

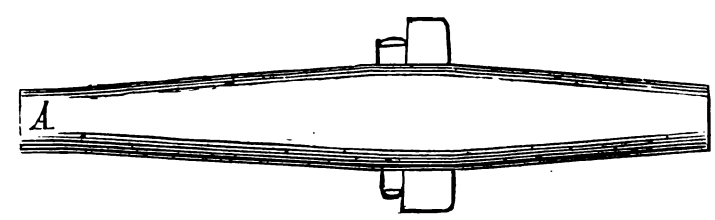

Fig. 1130.

of a locking key, and at others fed along the bar by a feed screw provided on the bar.

When the head is fixed on the bar the latter must be twice as long as the bore of the work, as the work is on one side of the head at the beginning, and on the other at the end of a cut; hence it follows that the sliding or feeding head is preferable, being the shortest, and therefore the most rigid, unless the bar slides through bearings at each end of the head.

Fig. 1131 represents a bar with a fixed head in operation in a cylinder, and having three cutting tools, and it will be observed that if tool A meets a low spot and loses its cut, the pressure on tools B and C, both being on the opposite side of the head, would cause the bar to spring over towards A, producing a hole or bore out of round, and it follows that four tools are preferable.

Fig. 1132 is a side view of a bar with four cutters, and Fig. 1133 an end view of the same shown within a cylinder, and it will

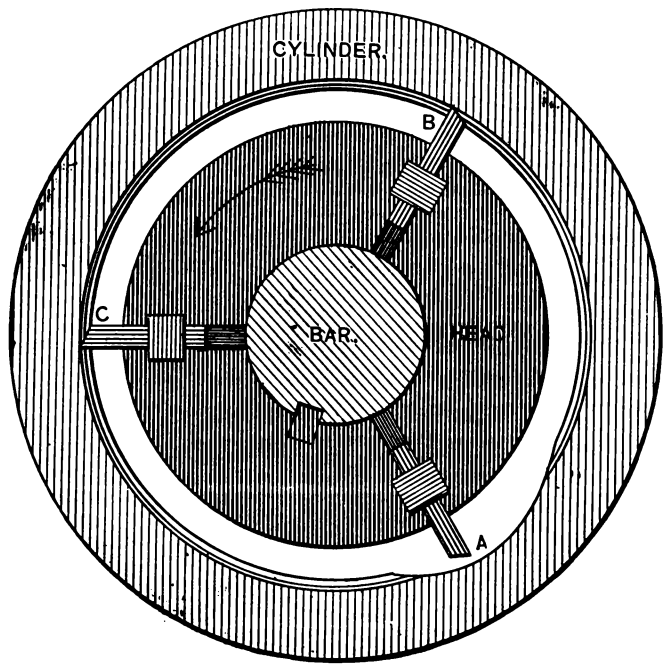

Fig. 1131.

be seen that should one of the cutters lose its cut, the two at right angles to it will steady the bar.

When the cutters require to stand far out from the head, the

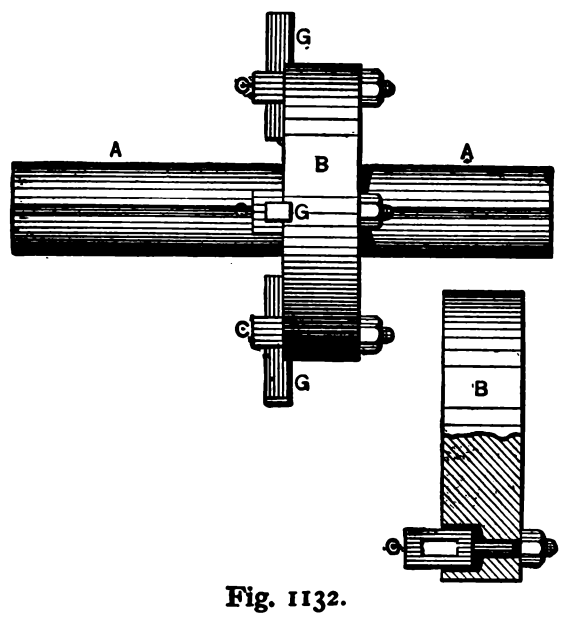

Fig. 1132.

bar will work more steadily if the cutters, instead of standing radially in the head, are placed as in Fig. 1134, so that they will be pulled rather than pushed to their cut.

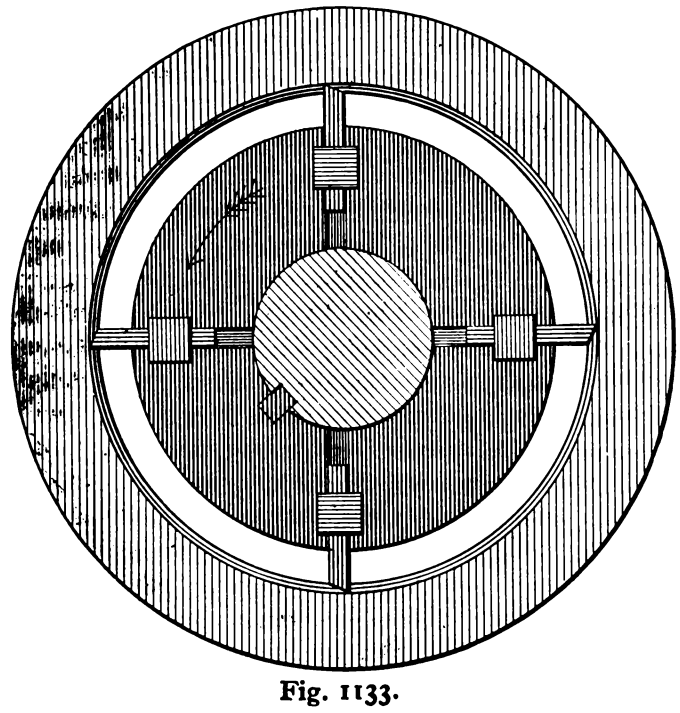

Fig. 1133.

An excellent form of boring bar fixed head, employed by Messrs. Wm. Sellers and Co. on their horizontal cylinder boring machine, is shown in Fig. 1135. The boring head is split at A, so that by means of the bolt B it may be gripped firmly to the bar D, or readily loosened and slid along it. The head is

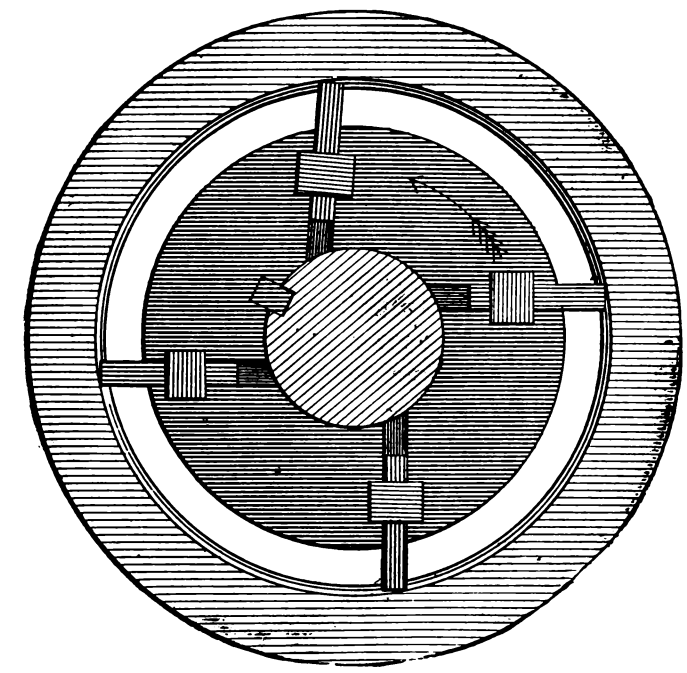

Fig. 1134.

provided with cutters C (of which there are four in the latest design of bar), fitting into the radial slots E. These cutters are secured to the head by the clamps and nuts at G.

Fig. 1136 represents a boring bar, with a sliding head fed by a feed screw running along the bar, and having at its end a pinion that meshes upon a gear or pinion upon the dead centre of the lathe.

The tools employed for the roughing cuts of boring bars should,

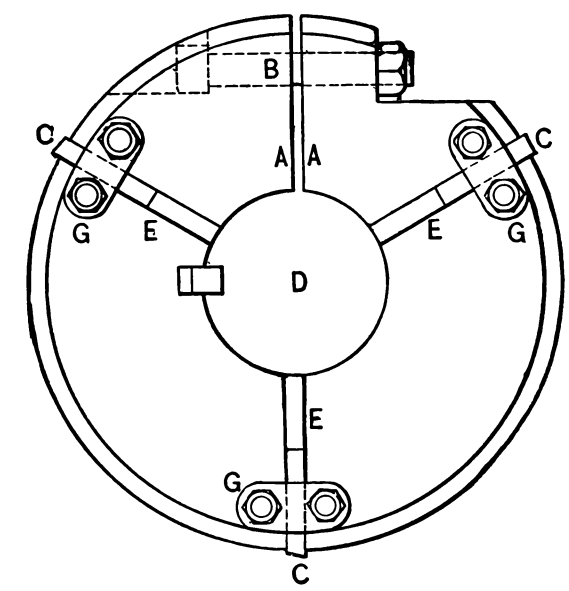

Fig. 1135.

for wrought iron, cast iron, steel, or copper, have a little front rake, the cutting corner being at A in Fig. 1137.

If the cutters are to be used for one diameter of bore only, they will work more steadily if but little or no clearance is given them on the end B, Fig. 1138, but it is obvious that if they are to be used

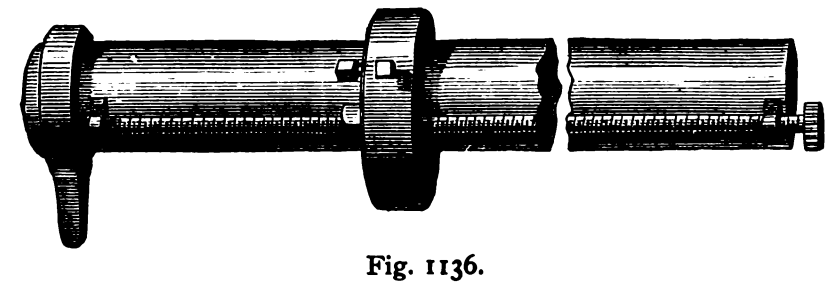

Fig. 1136.

on different diameters of bores they must have clearance on these ends. The same tool may be used both for roughing and finishing cuts.

The lip or top rake must, in case the bar should tremble during the finishing cut, be ground off, leaving the face level; and if,

from the bar being too slight for its duty, it should still either chatter or jar, it will pay best to reduce the revolutions per minute of the bar, keeping the feed as coarse as possible, which will give the best results in a given time. In cases where, from the excessive length and smallness of the bar, it is difficult to prevent it from springing, the cutters must be made as in Fig. 1139, having no lip, and but a small amount of cutting surface; and the corner A should be bevelled off as shown. Under these conditions, the tool is the least likely to chatter or spring into the cut.

The shape of the cutting corner of a cutter depends entirely upon the position of its clearance or rake. If the edge forming the diameter has no clearance upon it, the cutting being performed by the end edges, the cutter may be left with a square, slightly rounded, or bevelled corner; but if the cutter have clearance on its outside or diametrical edge, as shown on the cutters in Fig. 1137, the cutting corner should be bevelled or rounded off, otherwise it will jar in taking a roughing cut, and chatter in taking a

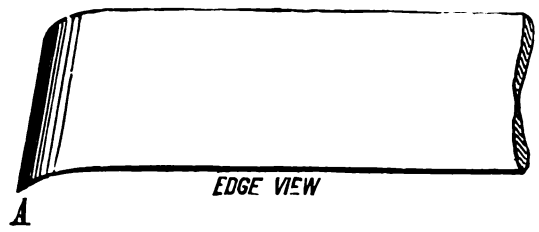

Fig. 1137.

moderate cut. The principle is that bevelling off the front edge of the cutter, as shown in Fig. 1139, tends greatly to counteract a disposition to either jarring or chattering, especially as applied to brass work.

The only other precaution which can be taken to prevent, in exceptional cases, the spring of a boring bar is to provide a bearing at each end of the work, as, for instance, by bolting to the end of the work four iron plates, the ends being hollowed to fit the bar, and being so adjusted as to barely touch it; so that, while the bar will not be sprung by the plates, yet, if it tends to spring out of true, it will be prevented from doing so by contact with the hollow ends of the plates, which latter should have a wide bearing, and be kept well lubricated.

It sometimes happens that, from play in the journals of the machine, or from other causes, a boring bar will jar or chatter at the commencement of a bore, and will gradually cease to do so as the cut proceeds and the cutter gets a broader bearing upon the work. Especially is this liable to occur in using cutters having

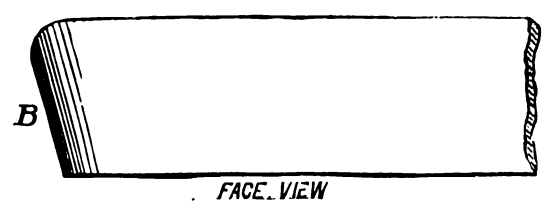

Fig. 1138.

no clearance on the diametrical edge; because, so soon as such a cutter has entered the bore for a short distance, the diametrical edge (fitting closely to the bore) acts as a guide to steady the cutter. If, however, the cutter has such clearance, the only perceptible reason is that the chattering ceases as soon as the cutting edge of the tool or cutter has lost its fibrous edges. The natural remedy for this would appear to be to apply the oil-stone; this, however, will either have no effect or make matters worse. It is, indeed, a far better plan to take the tool (after grinding) and rub the cutting edge into a piece of soft wood, and to apply oil to the tool during its first two or three cutting revolutions. The application of oil will often remedy a slight existing chattering of a boring bar, but it is an expedient to be avoided, if possible, since the diameter or bore cut with oil will vary from that cut dry, the latter being a trifle the larger.

The considerations, therefore, which determine the shape of a cutter to be employed are as follows: Cutters for use on a certain and unvarying size of bore should have no clearance on the diametrical edges, the cutting being performed by the end edge only. Cutters intended to be adjusted to suit bores of varying diameter should have clearance on the end and on the diametrical edges. For use on brass work the cutting corner should be rounded off, and there should be no lip given to the cutting edge. For wrought iron the cutter should be lipped, and oil or soapy water should be supplied to it during the operation. A slight lip should be given to cutters for use on cast iron, unless, from slightness in the bar or other cause, there is a tendency to jarring, in which case no lip or front rake should be given.

"In boring work chucked and revolved in the lathe, such, for instance, as axle boxes for locomotives, the bar shown in Fig. 1140 is an excellent tool. A represents a cutter head, which slides

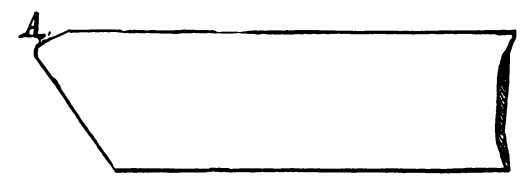

Fig. 1139.

along, at a close working fit, upon the bar D D, and is provided with the cutters B, B, B, which are fastened into slots provided in the head A by the keys shown. The bar D D has a thread cut upon part of its length, the remainder being plain, to fit the sliding head. One end is squared to receive a wrench, which resting against the bed of the lathe, prevents the bar from revolving upon the lathe centres F, F, by which the bar is held in the lathe. G, G, G are plain washers, provided to make up the distance between the thread and plain part of the bar in cases where the sliding head A requires considerable lateral movement, there being more or less washers employed according to the distance along which the sliding head is required to move. The edges of these washers are chamfered off to prevent them from burring easily. To feed the cutters, the nut H is screwed up with a wrench.

"The cutter head A is provided in its bore with two feathers, which slide in grooves provided in the bar D D, thus preventing the head from revolving upon the bar. It is obvious that this bar will, in consequence of its rigidity, take out a much heavier cut than would be possible with any boring tool, and furthermore that, there being four cutters, they can be fed up four times as fast as would be possible with a single tool or cutter. Care must, however, be exercised to so set the cutters that they will all project true radially, so that the depth of cut taken by each will be equal, or practically so; otherwise the feeding cannot progress any faster than if one cutter only were employed." *

For use on bores of a standard size, the cutters may be made with a projecting feather, fitting into a groove provided in the

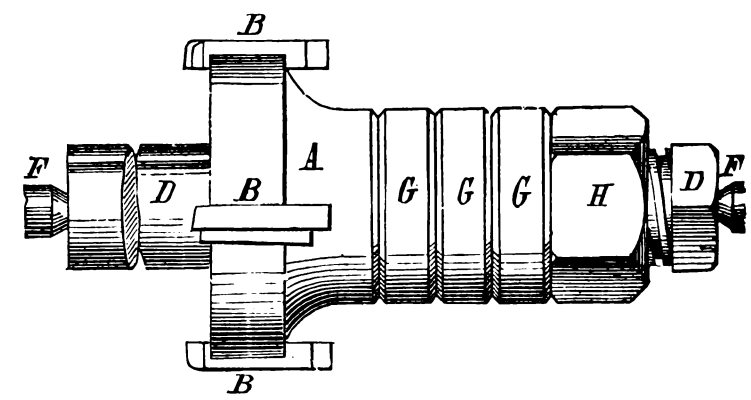

Fig. 1140.

head to receive it, as shown in Fig. 1141, which shows the boring bar and head, the nuts and washers being removed. A, A represent cutters, B the bar, C the sliding head, and D, D keys which fasten the cutters in the head. The cutters should be fitted to their places, and each marked to its place; so that, if the keyways should vary a little in their radius from their centre of the bar, they will nevertheless be true when in use, if always placed in the slot in which they were turned up when made. By fitting in several sets of cutters and turning them up to standard sizes, correctness in the size of bore may be at all times insured, and the feeding may be performed very fast indeed.

* From Rose's "Complete Practical Machinist."

For boring cannon the form of bar shown in Fig. 1142 is employed. The cannon is attached to the carriage or saddle of the lathe and fed to the boring bar. The working end only of the

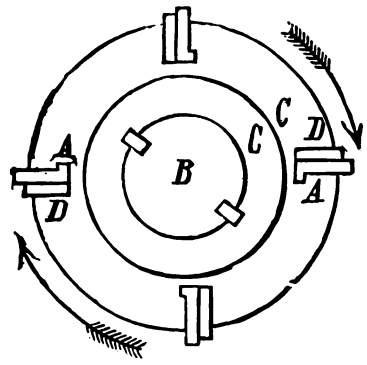

Fig. 1141.

bar is shown in the figure, the shank stem or body of the bar being reduced in diameter to afford easy access to the cuttings. The cutters occupy the positions indicated by the letters A,A,A, being

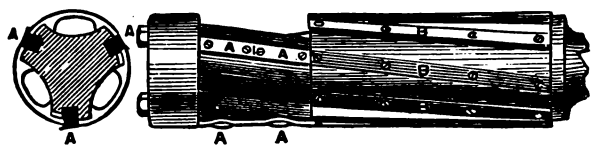

Fig. 1142.

carefully adjusted as to distance from the axis of the bar by packing them at the back with very thin paper. As may be observed they are arranged in two sets of three each, of which the first set

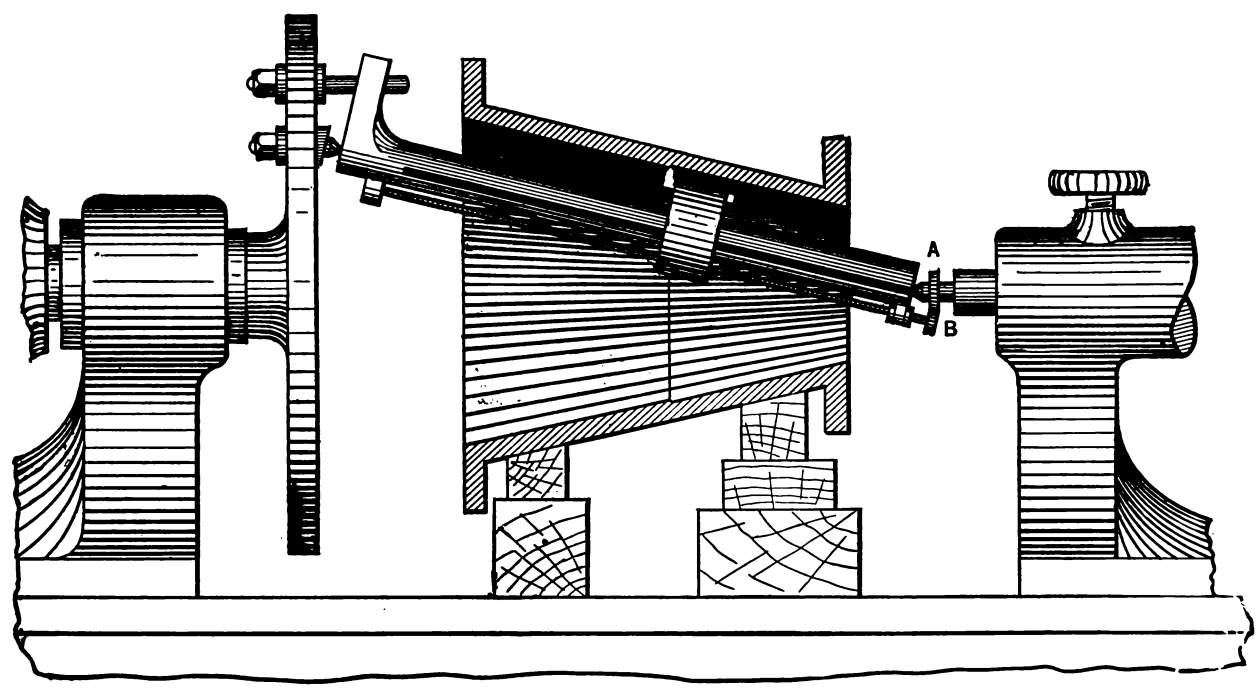

Fig. 1143.

performs almost the whole of the work, the second being chiefly added as a safeguard against error in the size of the bore on account of wear of the cutting edges, which takes place to a small

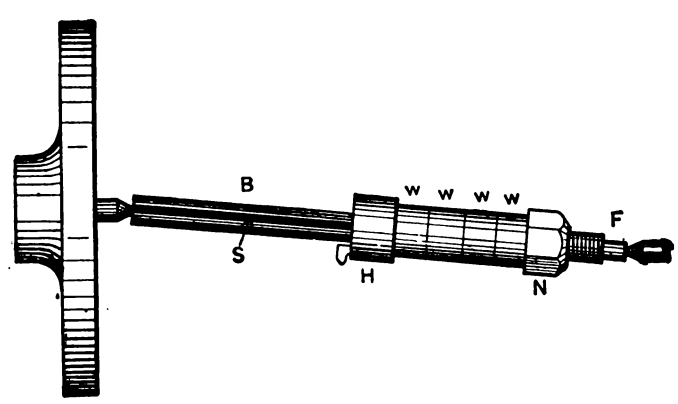

Fig. 1144.

but an appreciable extent in the course of even a single boring. Following the cutters is a series of six guide-bars (B B B), arranged spirally, which are made exactly to fit the bore. Provided that the length of these is sufficient, and their fit perfect, it is evident that the cutters cannot advance except in a straight line. The spiral arrangement of the cutters is employed to steady the bar and to give it front rake.

Boring Tapers with a Boring Bar or Attachment.—In cases where the degree of taper is very great a live centre may be bolted to a chuck plate, as in Fig. 1143, by which means any degree of taper may be bored. Instead of a star feed, a gear feed

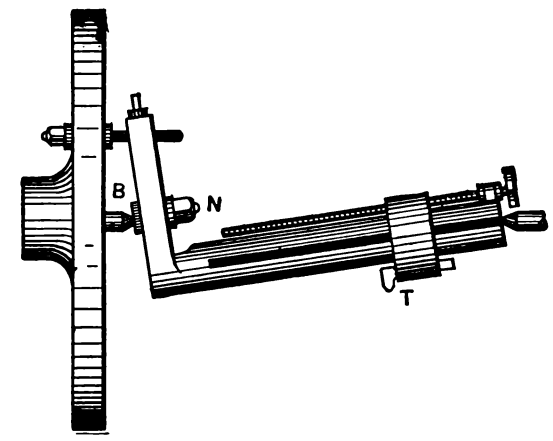

Fig. 1145.

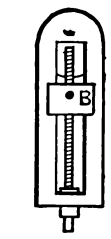

Fig. 1146.

may be provided by fastening one gear, as A, on the dead centre, and another, as B, on the feed-screw. The cutting tool must stand on the side of the sliding-head—that is, farthest from the line of lathe centres.

Small holes may readily be bored taper with a bar set over as in Fig. 1144, the work being carried by a chuck. The head H carries the cutting tool, having a feather which projects into the spline S to prevent the head from rotating on the bar. To prevent the bar from rotating, it is squared on the end F to receive a wrench. The head is fed by the nut N, which is screwed upon the bar. W, W, W, W, are merely washers used to bring the nut N at the end of the thread when the head is near the mouth of the work, their number, therefore, depending upon the depth of the work. A bar of this kind is more rigid than a tool held in the tool post.

Instead of setting the dead centre of the lathe over, the bar may be set over, as in Fig. 1145, in which the boring tool is carried in the sliding head at T, and is fed by a screw having a star feed on its end. At B is a block sliding in the end of the bar and capable of movement along the same, to adjust the degree of taper by means of the screw shown in the end view, Fig. 1146. N is a nut to secure B in its adjusted position.

In this case the work must be bolted to the lathe carriage, and the tool feeds to the cut, and the largest end of the hole bored will be at the live spindle end of the lathe.

But we may turn the bar around, as in Fig. 1147, driving the work in a chuck, and holding the dead centre end of the bar stationary, feeding the sliding head to the cut by the feed screw F.

To increase the steadiness of the sliding head it may with

advantage, be made long, as in Fig. 1148, in which S is a long sleeve fitting to the bar B at the head end H, and recessed as denoted by the dotted lines. The short cutting tool C may be fastened to H by a set-screw in the end of H, or by a wedge, as may be most desirable. The bar may obviously set over

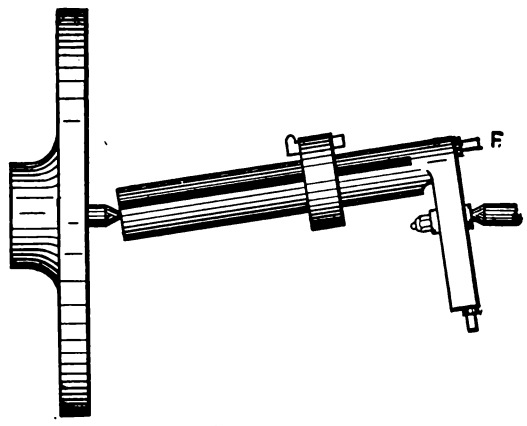

Fig. 1147.

to bore tapers as in the cut, and the sliding head may be prevented from turning by a driver resting on the top of the tool rest, and pushed by a tool secured to the tool post, the self-acting carriage feed being put in operation.

It is obvious that when a boring bar is set over to bore a taper,

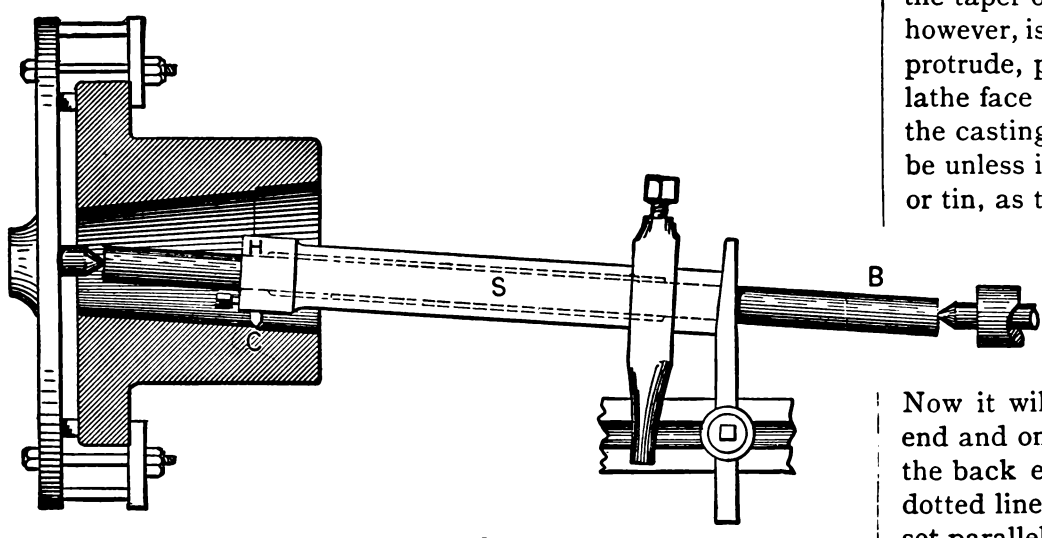

Fig. 1148.

the lathe centres do not bed fair in the work centres, hence the latter are subject to excessive wear and liable to wear to one side more than to another, thus throwing the bar out of true and altering the taper it will bore. This, however, may be prevented by fitting to the bar at each end a ball-and-socket centre, such as shown in section in Fig. 1149. A spherical recess is cut in the bar, a spherical piece is fitted to this recess and secured therein

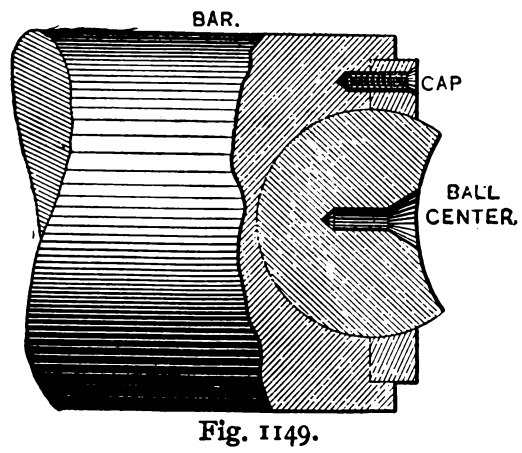

Fig. 1149.

by a cap as shown, the device having been designed by Mr. George B. Foote.

BORING DOUBLE TAPERS.—To prevent end play in journal bearings where it is essential to do so, the form of journal shown in Fig. 1150 is sometimes employed, hence the journal bearing requires to be bored to fit.

Fig. 1151 represents a bearing box for such a journal, the brasses A, B having flanges fitting outside the box as shown. The ordinary method of doing such a job would be to chuck the box on the face plate of the lathe, setting it true by the circle (marked for the purpose of setting) upon the face of the brasses, and by placing a scribing point tool in the lathe tool post and revolving the box, making the circle run true to the point, which would set the box one way, and then setting the flanges of the box parallel with the face plate of the lathe to set the box true the other way; to then bore the box half way through from one side and then turn it

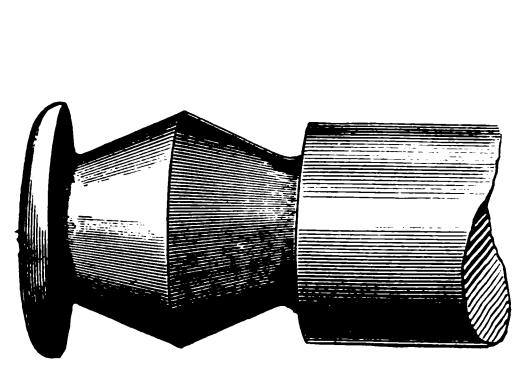

Fig. 1150.

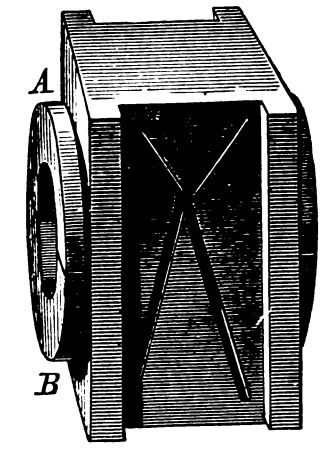

Fig. 1151.

round upon the face plate, reset it and bore the other half; thus the taper of the slide rest would not require altering. This plan, however, is a tedious and troublesome one, because, as the flanges protrude, parallel pieces have to be placed between them and the lathe face plate to keep them from touching; and as the face of the casting may not be parallel with the slide ways, and will not be unless it has been planed parallel, pieces of packing, of paper or tin, as the case may be, must be placed to true the ways with the face plate, and the setting becomes tedious and difficult. But the two tapers may be bored at one chucking, as shown in Fig. 1152, in which A represents the lathe chuck, and B is a sectional view of the bearing chucked thereon, C,C being the parallel pieces. Now it will be observed that the plane of the cone on the front end and on one side stands parallel with the plane of the cone on the back end at an exactly opposite diameter, as shown by the dotted lines D and E. If then the top slide of the lathe rest be set parallel with those lines, we may bore the front end by feeding the tool from the front of the bore to the middle as marked from

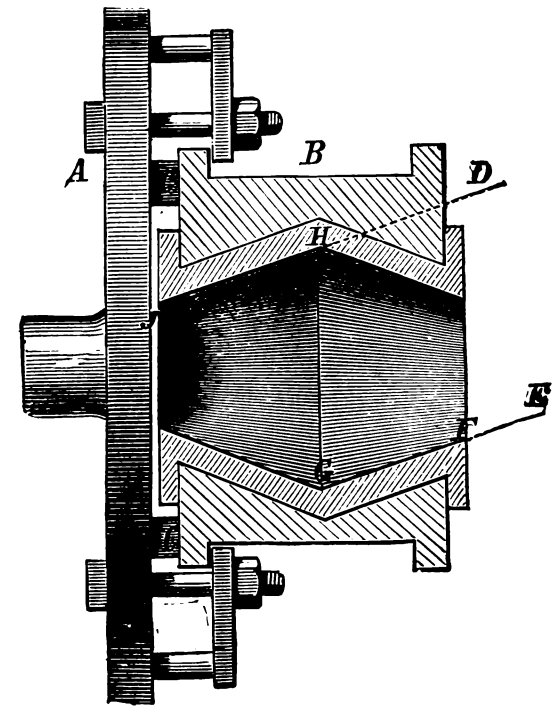

Fig. 1152.

F to G, and then, by turning the turning tool upside down, we may traverse or feed it along the line from H to J, and bore out the back half of the double cone without either shifting the set of the lathe rest or chucking the box after it is once set.

In considering the most desirable speed and feed for the cutting tools of lathes, it may be remarked that the speeds for boring tools

are always less than those for tools used on external diameters, and that when the tool rotates and the work is stationary, the cutting speed is a minimum, rarely exceeding 18 feet per minute, while the feed, especially upon cast iron, is a maximum.

The number of machines or lathes attended by one man may render it desirable to use a less cutting speed and feed then is attainable, so as to give the attendant time to attend to more than one, or a greater number of lathes. In the following remarks outside work and a man to one lathe is referred to.

The most desirable cutting speeds for lathe tools varies with the rigidity with which the tool is held, the rigidity of the work, the purpose of the cut, as whether to remove metal or to produce finish and parallelism, the hardness of the metal and stoutness of the tool, the kind of metal to be cut, and the length the tool may be required to carry the cut without being reground. The more rigid the tool and the work the coarser the feed may be, and the more true and smooth the work requires to be the finer the feed. In a roughing cut the object is to remove the surplus metal as quickly as possible, and prepare the work for the finishing cut, hence there is no objection to removing the tool to regrind it, providing time is saved. Suppose, for example, that at a given speed and feed the tool will carry a cut 12 inches along the work in 20 minutes, and that the tool would then require regrinding, which would occupy four minutes, then the duty obtained will be 12 inches turned in 24 minutes; suppose, however, that by reducing the speed of rotation, say, one-half, the tool would carry a cut 24 inches before requiring to be reground, then the rate of tool traverse remaining the same per lathe revolution, it would take twice as long (in actual cutting time) to turn a foot in length of the work. If we take the comparison upon two feet of work length, we shall have for the fast speed 24 inches turned in 40 minutes of actual cutting time, and 10 minutes for twice grinding the tool, or 24 inches in 50 minutes; for the slow speed of rotation we shall have 24 inches turned in 80 minutes.

In this case therefore, it would pay to run the lathe so fast that the tool would require to be ground after every foot of traverse. But in the case of the finishing cut, it is essential that the tool carry the cut its full length without regrinding, because of the difficulty of resetting the tool to cut to the exact diameter. It does not follow from this that finishing cuts in all cases require to be taken at a slower rate of cutting speed, because, as a rule, the opposite is the case, because of the lightness of the cut; but in cases where the work is long, the rate of cutting speed for the finishing cut should be sufficiently slow to enable the tool to take a cut the whole work length without grinding, if this can be done without an undue loss of time, which is a matter in which the workman must exercise his judgment, according to the circumstances. In tools designed for special purposes, and especially upon cast iron the work being rigid the tool may be carried so rigidly that very coarse feeds may be used to great advantage, because the time that the cutting edge is under cutting duty is diminished, and the cutting speed may be reduced and still obtain a maximum of duty; but the surfaces produced are not, strictly speaking, smooth ones, although they may be made to correct diameter measured at the tops of the tool marks, or as far as that goes at the bottom of the tool marks also, if it be practicable.

In the following table of cutting feeds and speeds, it is assumed that the metals are of the ordinary degree of hardness, that the conditions are such that neither the tool nor the work is unduly subject to spring or deflection, and that the tool is required to carry a cut of at least 12 inches without being reground; but it may be observed that the 12 inches is considered continuous, because on account of the tool having time to cool, it would carry more than the equivalent in shorter cuts, thus if the work was 2 inches long and the tool had time to cool while one piece of work was taken out and another put in the lathe, it would probably turn up a dozen such pieces without suffering more in sharpness than it would in carrying a continuous cut of 12 inches long. The rates of feed here given are for work held between the lathe centres in the usual manner.

CUTTING SPEEDS AND FEEDS.

For Wrought Iron.

Work diameter. Inches.	Roughing cuts. Feet per minute.	Roughing cuts. Lathe revolutions per minute.	Feed or lathe revolutions per inch of tool travel.	Finishing cuts. Lathe revolutions per minute.	Finishing cuts. Lathe revolutions per inch tool travel.
½	40	305	30	305	60
1	35	133	30	133	60
1½	30	76	30	76	60
2	28	53	25	53	60
2½	28	42	25	42	50
3	28	35	25	35	50
3½	26	28	25	30	50
4	26	24	20	26	50
5	25	18	20	21	50
6	25	15	20	16	50
		Cast Iron.			
1	45	163	30	163	40
1½	45	135	25	135	30
2	40	76	25	76	25
2½	40	61	20	61	20
3	35	44	20	50	16
3½	35	38	18	43	16
4	35	33	18	38	16
4½	30	25	16	28	14
5	30	22	16	26	14
5½	30	20	14	24	12
6	30	19	14	22	12
		Brass.			
½	120	910	25	910	40
¾	110	556	25	556	40
1	100	382	25	382	40
1¼	90	275	25	275	40
1½	80	203	25	203	40
1¾	80	174	25	174	40
2	75	143	25	143	40
2½	75	114	25	114	40
3	70	89	25	89	40
3½	70	76	25	76	40
4	70	66	25	66	40
4½	65	55	25	55	40
5	65	50	25	50	40
5½	65	45	25	45	40
6	65	41	25	41	40
		Tool Steel.			
¼	24	245	60	245	60
½	24	184	60	184	60
¾	24	147	50	147	60
1	24	122	40	122	60
1¼	20	87	30	87	60
1½	20	76	30	76	60
1¾	20	61	25	61	50
2	18	45	25	45	50
2½	18	34	25	34	50
3	18	27	25	27	50
3½	18	22	25	22	40
4	18	19	25	19	40
4½	18	17	25	17	40
5	18	15	25	15	40

These cutting speeds and feeds are not given as the very highest that can be attained under average conditions, but those that can be readily obtained, and that are to be found used by skilful workmen. It will be observed that the speeds are higher as the work is smaller, which is practicable not only on account of the less amount of work surface in a given length as the diameter decreases, but also because with an equal depth of cut the tool endures less strain in small work, because there is less power required to bend the cutting, as has been already explained.

When it is required to remove metal it is better to take it off at a single cut, even though this may render it necessary to reduce the cutting speed to enable the tool to stand an increase of feed better than excessive speed. Suppose, for example, that a pulley requires ¼ inch taken off its face, whose circumference is 5 feet and width 8 inches. Now the tool will carry across a cut reducing the diameter ⅛ inch, at a cutting speed of 40 feet per minute, or 10 lathe revolutions per minute; but if the speed be reduced to about 35 feet per minute, the tool would be able to stand the full depth of cut required, that is, ¼ inch deep, reducing the diameter

of the pulley ¼ inch. Now with the fast speed two cuts would be required, while with the slow one a single cut would serve; the difference is therefore two to one in favor of the deep cut, so far as depth of cut is concerned.

The loss of time due to the reduced rotative speed of work would of course be in proportion to that reduction, or in the ratio of 35 to 50. It is apparent then that the tool should, for roughing cuts, be set to take off all the surplus metal at one cut, whenever the lathe has power enough to drive the cut, and that the cutting speed should be as fast as the depth of cut will allow.

Concerning the rate of feed, it is advisable in all cases, both for roughing and finishing cuts, to let it be as coarse as the conditions will permit, the rates given in the table being in close approximation of those employed in the practice of expert lathe hands.

It is to be observed, however, that under equal conditions, so far as the lathe and the work is concerned, it is not unusual to find as much difference as 30 per cent. in the rate of cutting speed or lathe rotation, and on small work 50 per cent. in the rate of tool traverse employed by different workmen, and here it is that the difference is between an indifferent and a very expert workman.

An English authority (Mr. Wilson Hartnell), who made some observations (in different workshops and with different workmen) on this subject, stated that taking the square feet of work surface *tooled* over in a given time, he had often found as much as from 100 to 200 per cent. difference, and that he had found the rate of *tooling* small fly-wheels vary from 2 to 8 square feet per hour without any sufficient reason. The author has himself observed a difference of as much as 20 feet of work rotation per minute on work of 18 and less inches in diameter, and as much as 50 per cent. in the rate of tool traverse per lathe revolution.

It is only by keeping the speed rotation at the greatest consistent with the depth of cut, and by exercising a fine discretion in regulating the rotations of feed and cutting speed, that a maximum of duty can under any given conditions be obtained.

It has hitherto been assumed that the workman's attention is confined to running one lathe, but cases are found in practice where the lathes, having automatic feed and stop motions, one man can attend to several lathes, and in this case the feeds and speeds may be considerably reduced, so as to give the operator time to attend to a greater number of lathes. As an example, in the use of automatic lathes, several of which are run by one man, the following details of the practice in the Pratt and Whitney Company's tap and die department are given.

Lathe Number 1.—Lathe turning tool steel ⅜ inch in diameter and 1¼ long, reducing the diameter of the work ⅛ inch. Revolutions

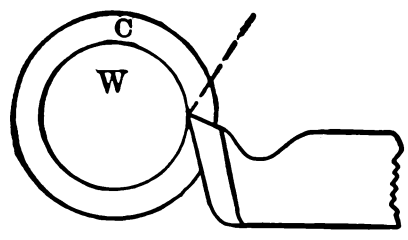

Fig. 1153.

of work per minute 125. Feed one inch of tool travel to 200 lathe revolutions.

Lathe Number 2.—Turning tool steel 2 inches long and ½ inch diameter, reducing diameter ⅛ inch. Revolutions of work 100 per minute. Feed 200 lathe revolutions per inch of tool travel.

Lathe Number 3.—Turning tool steel 4 inches long and ⅞ inch in diameter, reducing the diameter ⅛ inch. Revolutions of work 40 per minute. Feed 200 lathe revolutions per inch of tool travel.

Lathe Number 4.—Turning tool steel 6 to 8 inches long and 1 3/16 diameter, reducing work ⅛ inch in diameter. Revolutions of work 35 per minute. Feed 200 lathe revolutions per inch of tool travel.

Lathe Number 5.—Turning tool steel 8 to 10 inches long, and 2 inches in diameter, reducing diameter ⅛ inch. Lathe revolutions 30 per minute. Feed 200 lathe revolutions per inch of tool travel.

Lathe Number 6.—Turning tool steel 5 inches long and 3½ inches diameter, reducing diameter 3/16. Lathe revolutions 19 per minute. Feed 200 lathe revolutions per inch of tool travel.

The power required to drive the work under a given depth of cut varies greatly with the following elements :—

1st. The diameter of the work, all other conditions being equal.

2nd. The degree of hardness of the metal, all other conditions being equal.

3rd. Upon the shape of the cutting tool; and—

4th. Upon the quality of the steel composing the cutting tool, and the degree of its hardness.

That the diameter of the work is an important element in small work may be shown as follows :—

In Fig. 1153 let W represent a piece of work having a cut taken off it, and the line of detachment of the metal from the body of

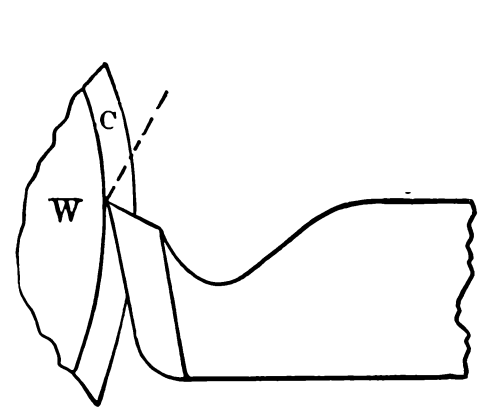

Fig. 1154.

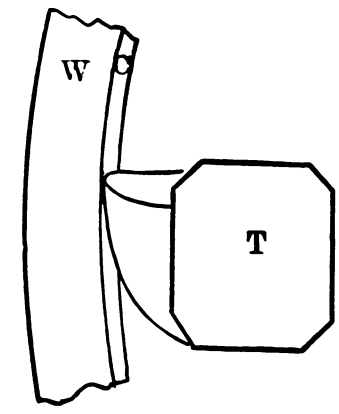

Fig. 1155.

the work will be represented by the part of the dotted line passing through the depth of the cut (denoted by C). Let Fig. 1154 represent a similar tool with the same depth of cut on a piece of work of larger diameter, and it will be observed that the dotted line of severance is much longer, involving the expenditure of more power.

In boring these effects are magnified: thus in Fig. 1155 let W represent a washer to be bored with the tool T, and let the same depth of cut be taken by the tool, the diameter of the work being simply increased. It is manifest that the cutting would require to be bent considerably more in the case of the small diameter of work than in that of the large, and would thus require more power for an equal depth of cut.

Again, from a reference to Figs. 950 and 952, it will be observed that the height of the tool will make a difference in the power required to drive a given depth of cut, the shaving being bent more when the tool is above the centre in the case of boring tools, and below the centre in the case of outside tools. But when the diameter of the work exceeds about 6 inches, it has little effect in the respects here enumerated.

The following, however, are the general rules applicable when considering the power required for the cutting of metal with lathe or planer tools. The harder the metal, the more power required to cut off a given weight of metal. The deeper the cut the less power required to cut off a given weight of metal. The quicker the feed the less power required to cut off a given weight of metal. The smaller the diameter of outside work, and the larger the diameter of inside or bored work, the less power required.

Copper requires less power than brass; yellow, and other brass containing zinc, less than brass containing a greater proportion of tin. Brass containing lead requires less power than that not containing it. Cast iron requires more power than brass, but less than wrought iron; steel requires more power than wrought iron.

Chapter XII.—EXAMPLES IN LATHE WORK.

Technical Terms used with Reference to Lathe Work.—Work held between the lathe centres is said to run true, when a fixed point set to touch its perimeter will have an equal degree of contact all around the circumference, and at any part of the length of the same when the work is cylindrical and is rotated. When such a fixed point has contact at one part more than at another of the work circumference, it is said to run "out of true," "out of truth," or not to run true.

Radial or side faces (as they are sometimes called) also run true when a fixed point has equal contact (at all parts of the revolution) with the work surface.

Work that is held in chucks is said to be set true when it is adjusted in the intended position.

To true up is to take off the work a cut of sufficient depth to cause a fixed point to touch the work surface equally at each point in the revolution.

To clean work up is to take off it a cut sufficiently deep to cause it to run true, and at the same time removes the rough surface or scale from the metal.

Roughing out work is taking off a cut which reduces it to nearly the finishing size, leaving sufficient metal to take a finishing cut, and reduce it to the proper size.

Facing a piece of work is taking a cut off its radial face.

When a radial face or surface is convex, it is said to be *rounding* or *round*, and when it is concave it is said to be *hollow*.

When a radial face is at a right angle to a cylindrical parallel surface, it is said to be *square*; but in taper work, it is said to be *square* when it is at a right angle to the axis of the taper.

Outside work includes all operations performed on a piece of work except those executed within the bores of holes or recesses, which is termed inside or internal work.

Jarring or *chattering* is the term applied to a condition in which the tool does not cut the work smooth, but leaves a succession of elevations and depressions on it, these forming sometimes a regular pattern on the work. In this case the projections only will have contact with the measuring tools, or with the enveloped or enveloping work surface, when the two pieces are put together.

Jarring or chattering more commonly occurs in the bores of holes or upon radial surfaces, than upon plain cylindrical surfaces, unless the latter be very long and slender. It occurs more also upon brass than upon iron work, and more upon cast than upon wrought iron or steel. It is caused mainly by vibrations of either the work or the tool.

It is induced by weakness (or want of support) in the work, by weakness in the tool, or by its being improperly formed for the duty. Thus, if a tool have too broad a cutting surface it will jar; if it be held out far from the tool post it may jar; if it have too keen a top face for the conditions it will jar.

Jarring may almost always be remedied on brass work by reducing the keenness of the top face, giving it if necessary negative rake, as shown in Fig. 964. On iron or steel work it may be avoided by using as stiff a cutting tool as possible, holding its cutting edge as close to the tool post as convenient, and reducing the length of cutting edge to a minimum.

It may be prevented sometimes by simply placing the finger or a weight upon the tool, or by applying oil to the work, but if this be done it should be supplied continuously throughout the cut, as a tool will cut to a different depth when dry from what it will when lubricated.

In using hand tools such as scrapers, too thin a tool may cause jarring, which may be obviated by keeping the tool rest as close to the work as possible, and placing a piece of leather between the work and the rest.

Examples in Lathe Work.—The simplest class of lathe work is that cut from rods or short lengths of rod metal, which may be turned by being held in a small chuck, or between the lathe centres.

Such work is usually of small diameter and short length, and is therefore difficult to get at if turned between the lathe centres, because the dog that drives it, the lathe face plate, and the dead centre are in the way; such work may be more conveniently driven by a small chuck.

It is usually made of round wire or rod, cut into lengths to suit the conditions; thus if the lathe have a hollow spindle, the rod lengths may be so long as to pass entirely through the spindle, otherwise the lengths may be passed through the chuck, and as far as possible into the live spindle centre hole.

In any event it is desirable to let the rod project so far out from the chuck as to enable its being finished and cut off, without removal from or moving it in the chuck, because such chucks are apt in course of time to wear, so that the jaws do not grip the work quite concentric to the line of centres; hence, if the work be moved in the chuck after having been turned, it is apt to run out of true.

Sometimes, however, the existence of a collar on the work prevents it from being trued for fit at both ends without being cut off from the rod, in which case, if it requires correction after being cut off, it must be rechucked, and it may be necessary at this rechucking to grip it in several successive positions (partly rotating it in the chuck at each trial) before it will run true.

Sometimes the length of work that may advantageously be driven by such a chuck is so great as to render the use of the dead centre to support one end necessary, in which case the rod should be removed from the chuck before each piece is turned, so as to centre drill the dead centre end.

There is one special advantage in driving small work in a chuck of this kind, inasmuch as the work can be tried for fit without removing it from the lathe, while in some cases operations can be performed on it which would otherwise require its removal to the vice; suppose, for example, a thread of very small diameter and pitch requires to be cut on the work end, then a pair of dies or a screw plate may be placed on it, and the lathe pulled round by the belt; after the dies have commenced to start the thread, they may be released and allowed to rotate with the lathe, which will show if they are starting the thread true upon the work.

In cases also where the end of the work requires fitting to a seat, or where it requires turning to a conical point, there is the advantage that the work can be tried to the seat, or turned to the point without taking from the lathe, or without any subsequent operations, whereas in the case of a conical point, the existence of a work centre would necessitate turning the cone some distance from the end, and cutting off the work centre.

As the size of the work increases, the form of the chuck is varied to make it more powerful and strong to resist the strains, but when the size of the chuck becomes so large that it is as much in the way as the face place would be, it is better to turn the work between the lathe centres.

For work to be turned between the lathe centres, it is essential that those centres run true, and be axially in line, and that both centres be turned to the same degree of angle or cone, which is usually for small lathes an angle of 60°, and for lathes of about 30 inches swing and over an angle of about 70°. Both centres should be of an equal angle, for the following reasons.

It is obvious that the work centres wear to fit the dead centre, because of the friction between the two. Now in order to turn a piece of work from end to end, it is necessary to reverse it in the

lathe, because at the first turning one end is covered by the carrier or driver driving it. At the first turning one work centre only will have worn to fit the lathe centre; hence when at the second, the other work centre wears to fit the dead centre and in the process of such wearing moves (as it always does to some degree) its location, the part first turned will no longer run true. To obviate this difficulty it is proper at the first turning to cut the work down to nearly the finished size, and then reverse it in the lathe and turn up the other end. At this second turning the work will have had both work centres worn to fit the dead centre, hence if it be of the same angle as the live centre, the work will properly bed to both centres, otherwise it will plainly not bed well to the live centre, and in consequence will be apt to run in some degree out of true at the live centre end.

The lathe centres should, for parallel work, stand axially true one with the other, and this can only be the case when the live centre runs true. If the live centre does not run true the following difficulties are met with.

If one end only of the work requires to be turned and it can be completely finished without moving the work driver, the work will be true (assuming the live spindle to run true in its bearings and to fit the same). It will also run true if the work be taken from the lathe and replaced without moving the driver or carrier, providing that the driver be so placed as to receive the driving pressure at the same end as it did when the work was driven; and it is therefore desirable, on this account alone, to always so place the work in the lathe that the driver is driven by its tail end, and not from the screw or screw head. But if the work be turned end for end it will not run true, because the work centre at the unturned end of the work will not be true or central to the turned part of the work.

It is obvious then that lathe centres should run true. But this will not be the case unless the holes into which they fit in the lathe are axially true one with the other and with the lathe spindles. If these holes are true, and the centres are turned true and properly cleaned before insertion, the centres may be put into their places without any adjustment of position. Otherwise, however, a centre punch mark is made on the radial or end face of the live spindle, and another is made on the live centre, so that both for turning up and for subsequent use the centre will run true when these centre punch marks are exactly opposite to each other.

The best way to true lathe centres is with an emery-wheel. In some lathes there are special fixtures for emery grinding, while in others an attachment to go in the tool post is used. Fig. 1156 shows such an attachment.

In the figure A is a frame to be fastened in the slide rest tool post at the stem A'. It affords journal bearing to the hand wheel B, to the shaft of which is attached the gear-wheel C, which drives a pinion D, on a shaft carrying the emery-wheel E, the operation being obviously to rotate wheel B, and drive the emery-wheel E, through the medium of the multiplying gear-wheels C, D.

The emery-wheel is fed to its depth of cut on the lathe centre P, by the cross feed screw of the lathe, and is traversed by pulling or pushing the knob F, the construction of this part of the device being as follows: G and H are two bushes, a sliding fit in the arms of frame A, but having on top flat places I and J, against which touch the ends of the two set-screws *k*, *l*, to prevent them from rotating. The emery-wheel and gear pinion D are fast together, and a pin passes through and holds G and H together. Hence the

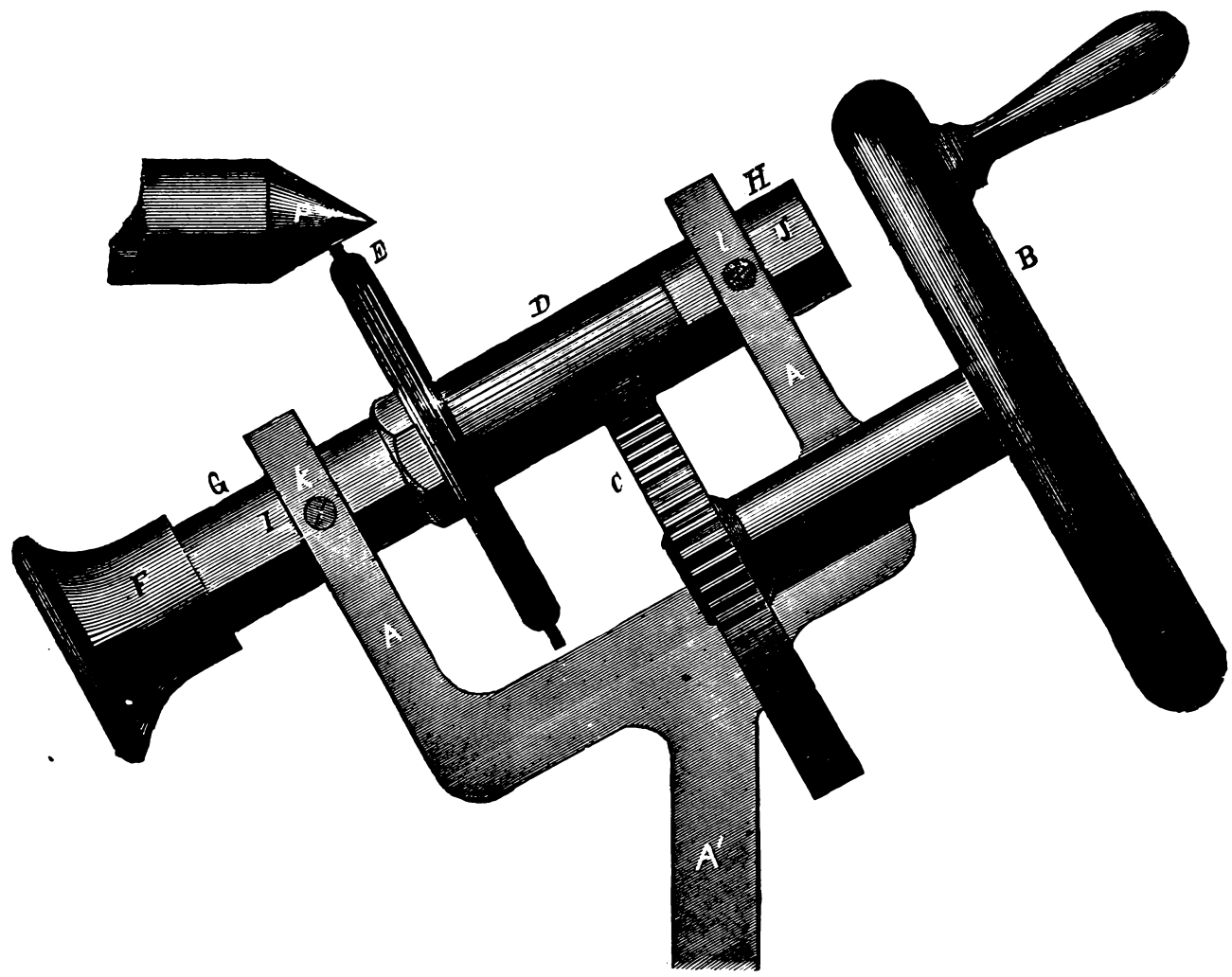

Fig. 1156.

knob F pushes or pulls, as the case may be, the bushes through the bearings G, H, in the frame A, the pinion and emery-wheel traversing with them. Hence pinion D is traversed to and fro by hand, and it is to admit of this traverse that it requires its great length. The stem A is at such an angle that, if it be placed true with the line of cross feed, the lathe centre will be ground to the proper angle.

Fig. 1157 represents a centre grinding attachment by Trump Brothers, of Wilmington, Delaware. In this device the emery-wheel is driven by belt power as follows. A driving wheel A is bolted to the lathe face plate, and a stand carries at its top the over-head belt pulleys, and at its base the emery-wheel and spindle. This stand at C sets over the tool post, and is secured by a bar passing through C and through the tool post, whose set-screw therefore holds the stand in position. On the end of the emery-wheel spindle is a feed lever, by means of which the emery-wheel may be fed along the lathe centre. Cup piece B is for enabling wheel A to be readily set true on the lathe face plate, one end of B fitting the hub of A, while the other receives the dead centre which is screwed up so that B will hold A in place, while

it is bolted to the lathe face plate, and at the same time will hold it true.

In the absence of a centre grinding attachment, lathe centres may be turned true with a cutting tool, and finished with water applied to the tool so as to leave a bright and true surface. They should not, for the finest of work, be finished by filing, even though the file be a dead smooth one, because the file marks cause undue wear both to the lathe centres and the work centres.

The dead centres should be hardened to a straw color, and the live centre to a blue; the former so as to have sufficient strength to resist the strain, and enough hardness to resist abrasion, and the latter to enable it to be trued up without softening it.

When, after turning them up, the centres are put into their places, the tailstock may be moved up the bed so that the dead centre projects but very little from the tailstock, and is yet close to the live centre, and the lathe should be run at

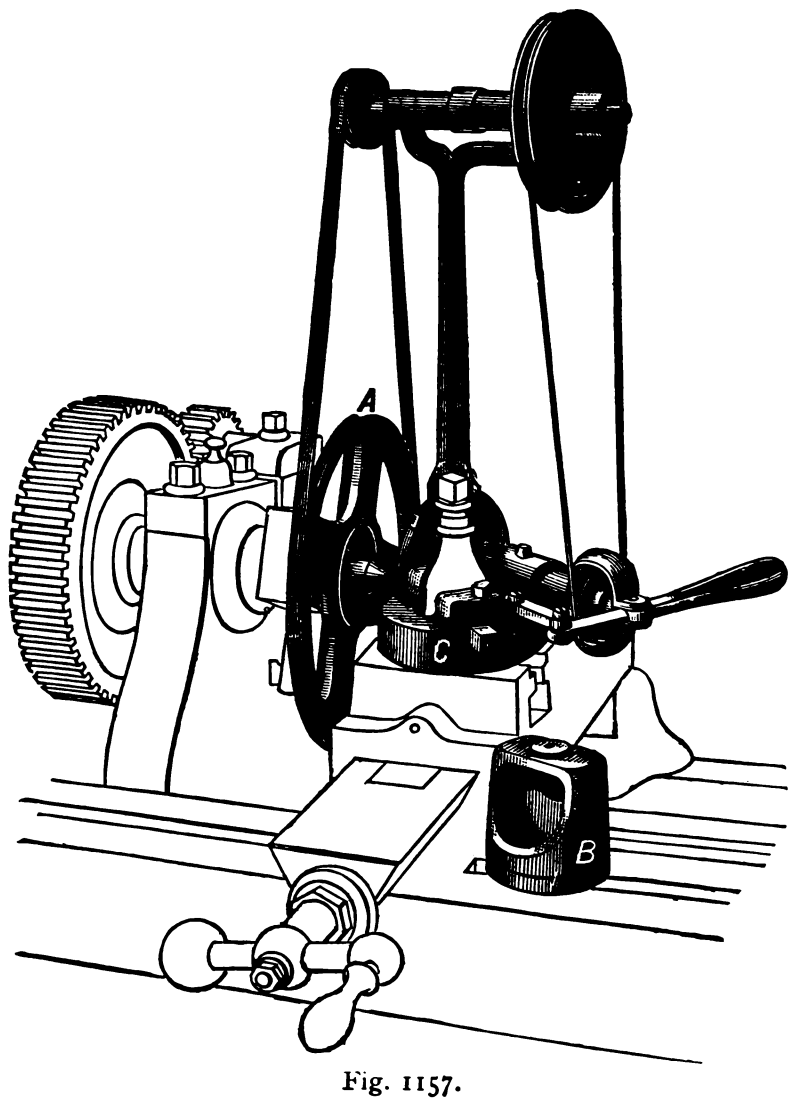

Fig. 1157.

its fastest speed to enable the eye to perceive if the live centre runs true, and whether the dead centre is in line with the live one, and the process repeated so that both centres may be tested.

A more correct test, however, may be made with the centre indicator.

CENTRE INDICATORS.—On account of the difficulty of ascertaining when a centre runs quite true, or when a very small hole

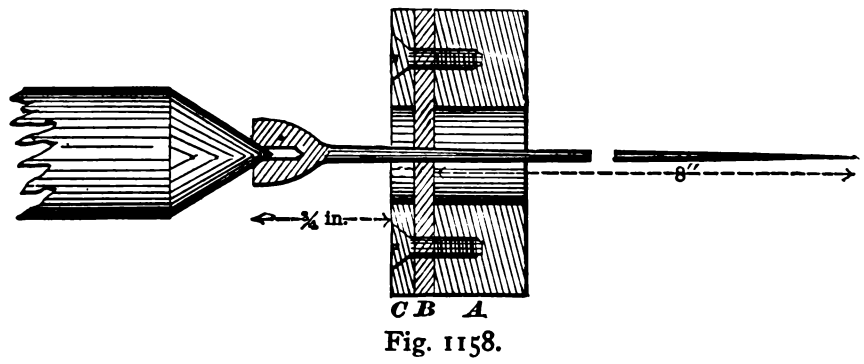

Fig. 1158.

or fine cone as a centre punch mark runs true when chucked in a lathe, the centre indicator is used to make such tests, its object being to magnify any error, and locate its direction. Fig. 1158, from *The American Machinist*, represents a simple form of this tool, designed by Mr. G. B. Foote, for testing lathe centres. A is a piece of iron about 8 inches long to fit the lathe tool post, B is a leather disk secured to A by a plate C, and serving to act as a holding fulcrum to the indicator needle, which has freedom of movement on account of the elasticity of the leather washer, and on account of the hole shown to pass through A. It is obvious

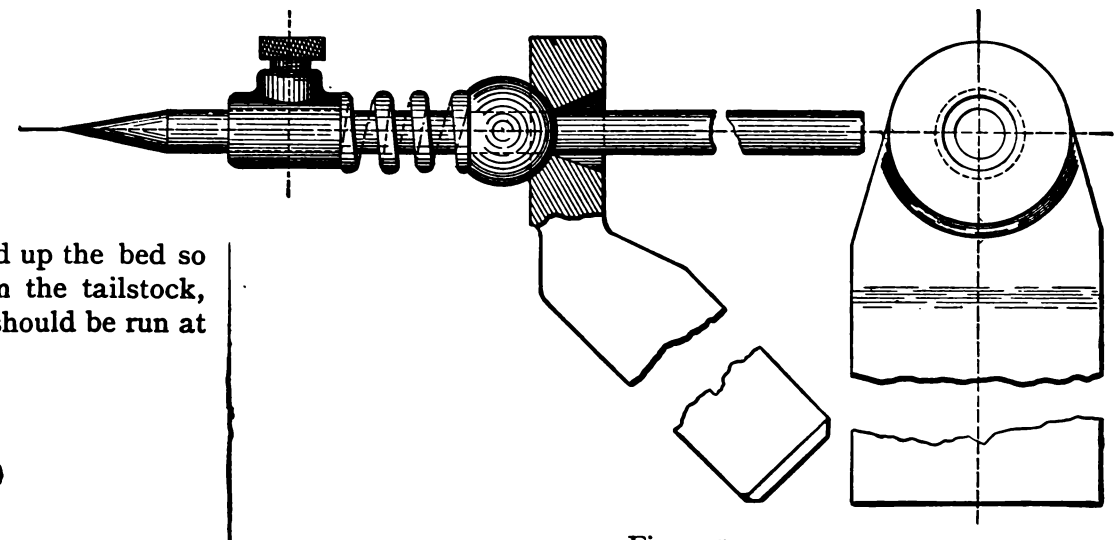

Fig. 1159.

that if the countersunk end of the needle does not run true, the pointed end will magnify the error by as many times as the distance from the needle point to the leather washer is greater than that from the leather washer to the countersunk end of the needle. It is necessary to make several tests with the indicator, rotating the lathe centre a quarter turn in its socket for each test, so as to prove that the centre runs true in any position in the lathe spindle. If it does not run true the error should be corrected, or the centre and the lathe spindle end may be marked by a centre punch done to show in what position the centre must stand to run true.

The tension of the leather washer serves to keep the countersunk against the lathe centre without a very minute end adjustment. Or the same end may be attained by the means shown in Fig. 1159, which is a design communicated by Mr. C. E. Simonds to *The American Machinist*. The holder is cupped on one side to receive a ball as shown, and has a countersink on the other to permit a free vibration of the needle. The ball is fitted to slide easily upon the needle, and between the ball and a fixed collar is

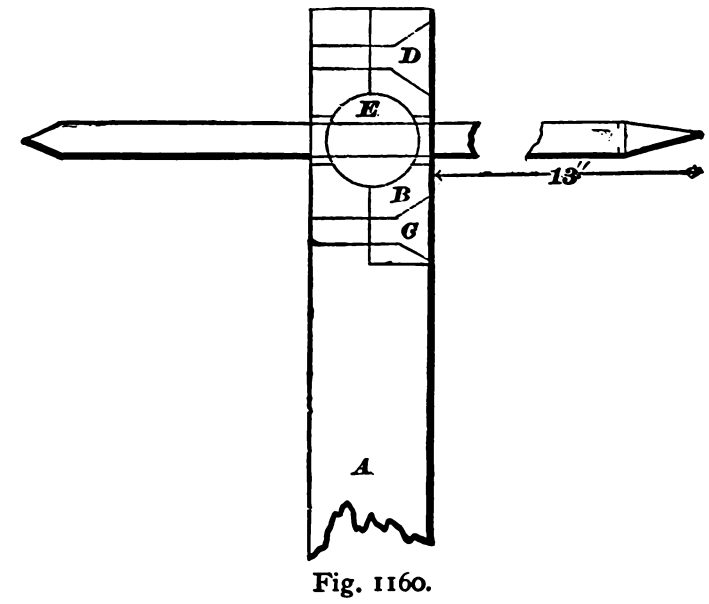

Fig. 1160.

a spiral spring that keeps the ball in contact with its seat in the holder.

One end of the needle is pointed for very small holes or conical recesses, while the other is countersunk for pointed work, as lathe centres. The countersink of the needle may be made less acute than the lathe centre, so that the contact will be at the very point of the lathe centre, the needle not being centre-drilled. The end of the needle that is placed against the work should be as near to the ball or fulcrum as convenient, so as to multiply the errors of work truth as much as possible.

In some forms of centre indicators the ball is pivoted, so that the needle only needs to be removed to reverse it end for end, or

for adjusting its distance, it being made a close sliding fit through the ball. Thus, in Fig. 1160 the ball E is held in a bearing cut half in the holder A, and half in cap B, which is screwed to A by screws C D.

Or the ball may be held in a universal joint, and thus work more frictionless. Thus, in Fig. 1161 it is held by the conical points of two screws diametrically opposite in a ring which is held by the conical points of two screws threading through an outer ring, these latter screws being at a right angle to those in the inner ring.

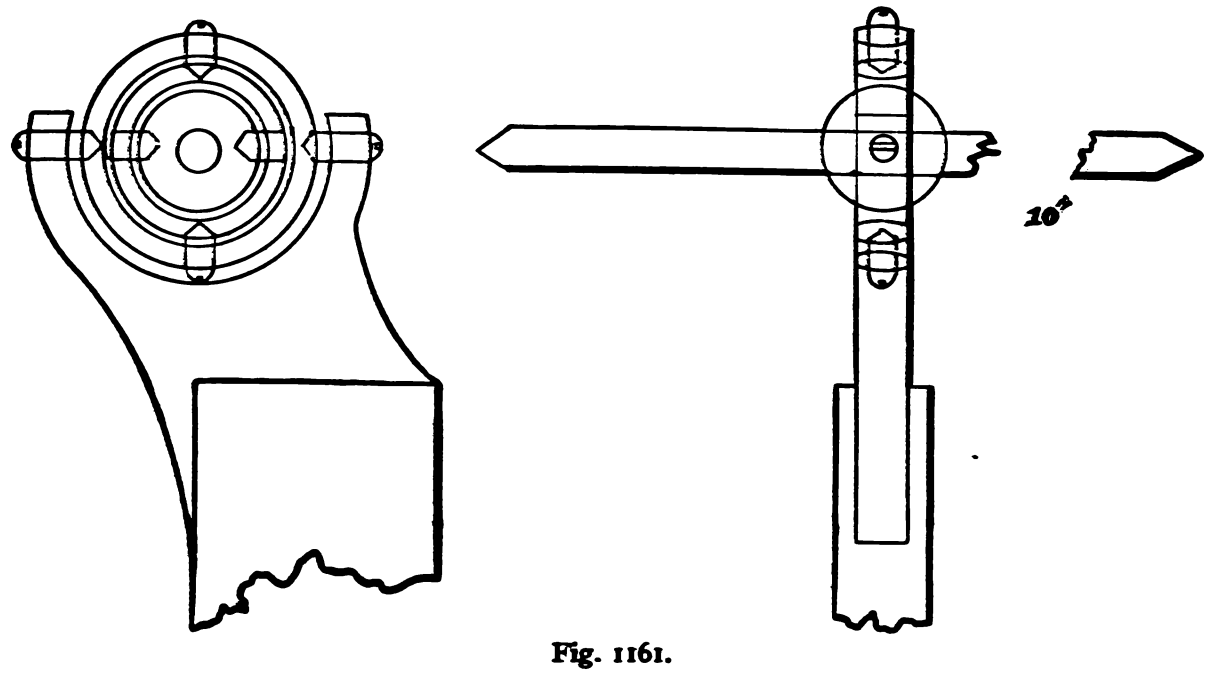

Fig. 1161.

The outer ring is held to the holder by the conical points of two screws, all the conical points seating in conical recesses.

It is obvious that the contact of the point of the needle and the work may be more delicately made when there is some elasticity provided, as is the case with the spiral spring in Fig. 1159.

Indicators of this class may be used to test the truth of cylindrical work: thus, in Fig. 1162 is an application to a piece of work between the lathe centres, there being fitted to one end of the needle a fork *a* that may be removed at pleasure.

One of the difficulties in turning up a lathe centre to run true arises from the difference in cutting speed at the point and at the

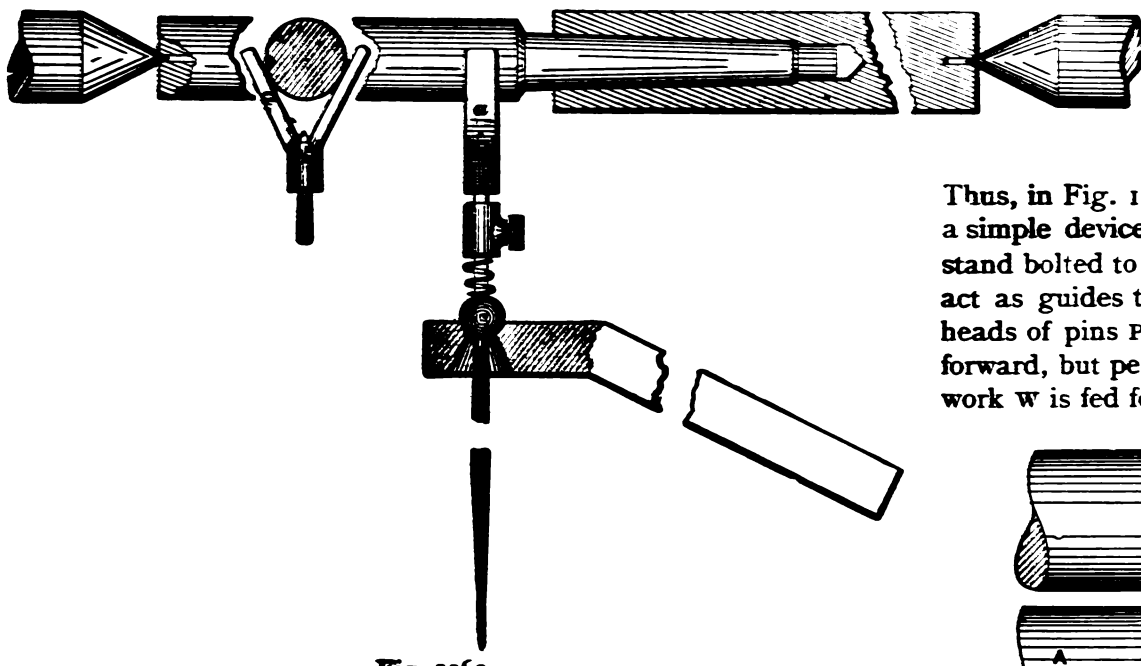

Fig. 1162.

full diameter of the cone, the speed necessary to produce true smooth work at the point being too fast for the full diameter. This may be remedied on centres for small work, as, say, three inches and less in diameter, by cutting away the back part of the cone, leaving but a short part to be turned up to true the centre.

To permit the cutting off or squaring tool to pass close up to the centre, and thus prevent leaving a burr or projection on the work end, the centre may be thus relieved at the back and have a small parallel relief, as in Fig. 1164 at A, the coned point being left as large as possible, but still small enough to pass within the countersink.

In centres for large and heavy work it is not unusual to provide some kind of an oil way to afford means of lubrication, and an excellent method of accomplishing this object is to drill a hole A, Fig. 1163, to the axis of the centre and let it pass thence to the point as denoted by the dotted line; there may also be a small groove at B in the figure to distribute the oil along the centre, but grooves of this kind make the returning of the centre more difficult and are apt to cause the work centres to enlarge more from wear, especially in turning tapers with the tailstock set over the lathe centre, these being out of line with the work centre.

To enable a broad tool such as a chaser to meet work of smaller diameter than the lathe centre, the latter is cut away on one side as in Fig. 1164. It is obvious also that the flat place being turned uppermost, will facilitate the use of the file on work of smaller diameter than the lathe centre, and that placed in the position shown in the cut, it will permit a squaring tool to pass clear down to the centre and avoid leaving the projecting burr which is left when the tool cannot pass clear down the face to the edge of the countersink of the work centre.

The method to be employed for centring work depends upon its diameter, and upon whether its ends are square or not. When the pieces are cut from a rod or bar in a cutting-off machine, the ends are square, and they may be utilized to set the work by in centring it. Thus, in Fig. 1165 is a top, and in Fig. 1166 is an end view of a simple device, or lathe attachment for centre drilling. S is a stand bolted to the lathe shears and carrying two pins P, which act as guides to the cup chuck or work guide G; between the heads of pins P and the hubs of G are spiral springs, forcing it forward, but permitting it to advance over the drill chuck; the work W is fed forward to the drill. At the dead centre end the

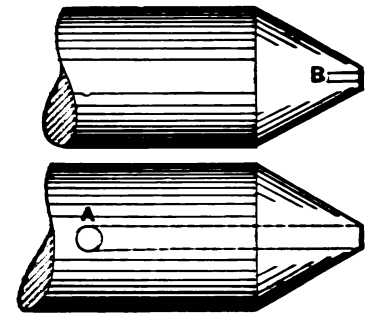

Fig. 1163.

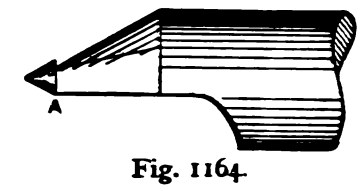

Fig. 1164.

work is supported by a female cone centre D in the tail spindle T. The work rests in mouths of G and D, and as the pieces are cut from the rod they are sufficiently straight, and being cut off in a cutting-off machine the ends are presumably square; hence the coned chucks will hold them sufficiently true with the ends, and the alignment of the centre drilled holes will not be impaired by any subsequent straightening processes; for it is to be observed

that if work is centre-drilled and straightened afterwards, the straightening throws the centre holes out of line one with the other, and the work will be more liable to gradually run out of true as its centres wear.

Thus, in Fig. 1167, let W represent a bent piece of work centre-drilled, and the axis of the holes will be in line as denoted by the

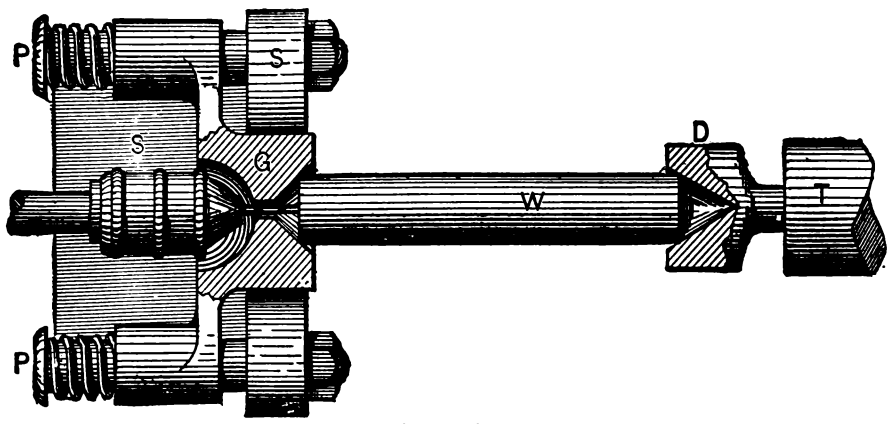

Fig. 1165.

dotted line, but after the piece is straightened the holes will lie in the planes denoted by the dotted line in Fig. 1168, and there will be a tendency for the work centres to move over towards the sides C D as the wear proceeds.

In Fig. 1169 is shown a centre-drilling machine, which consists of a live spindle carrying the centre-drilling tool, and capable of

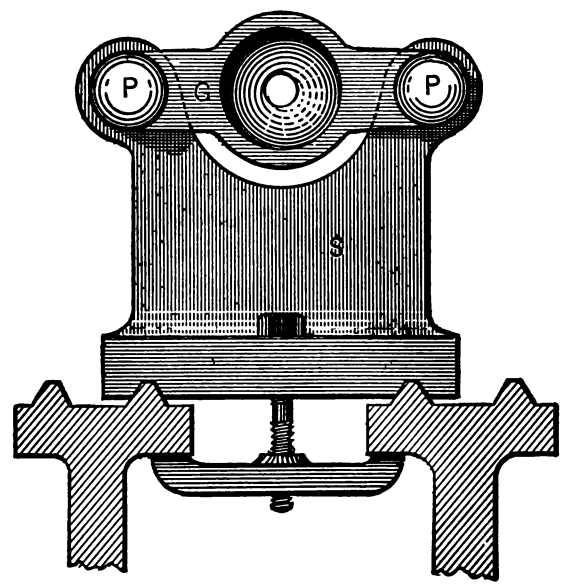

Fig. 1166.

end motion for the drill feed. The work is held in a universal chuck, and if long is supported by a stay as shown in the figure. The axis of the work being in line with that of the chuck, the work requires no setting.

In this case the centre hole will be drilled true with that part of

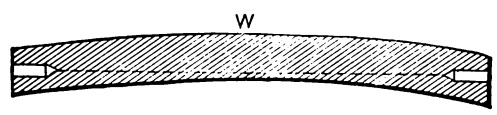

Fig. 1167.

the work that is held in the chuck, and the alignment of the centre hole will depend upon the length of the rod being supported with its axis in line with the live spindle. If the work is not straightened after drilling, the results produced are sufficiently correct for the requirements; but it follows from what has been said, that work

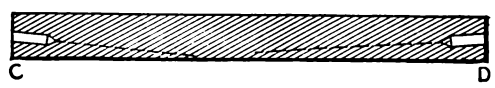

Fig. 1168.

wnich requires to be straightened and tried for straightness in the lathe should be centred temporarily and not centre-drilled until after the straightening has been done

In Fig. 1170 is shown a combined centre-drill and countersink not unfrequently used in centring machines. The objection to it is, that the cutting edges of the drill get dull quicker than those of the countersink, and in regrinding them the drill gets shorter. Of course the drill may be made longer than necessary so as to admit of successive grindings, but this entails drilling the centre holes deeper than necessary, until such time as the drill has worn to its proper length. To overcome this difficulty the countersink

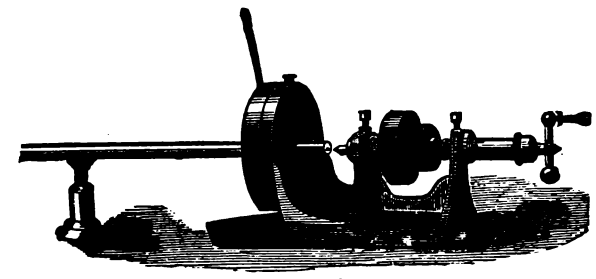

Fig. 1169.

may be pierced to receive a drill as in Fig. 1171, the drill being secured by a set-screw S.

Among the devices for centring work by hand, or of pricking the centre preparatory for centre-drilling, are the following:—

In Fig. 1172 is a centre-marking square. A B C D represents the back and E the blade of the square. Suppose then that the dotted circle F represents the end of a piece of work, and we apply the square as shown in the cut and mark a line on the end of the

Fig. 1170.

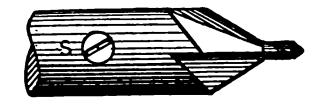

Fig. 1171.

work, and then moving the square a quarter turn around the work, draw another line, the point of contact of these two lines (as at G in the cut) will be the centre of the work, or if the work is of large diameter as denoted by the circle H H, by a similar process we obtain the centre E. In this case, however, the ends A B of the square back must be of equal lengths, so that the end faces at A B will form a right angle to the edge of the blade, and this enables

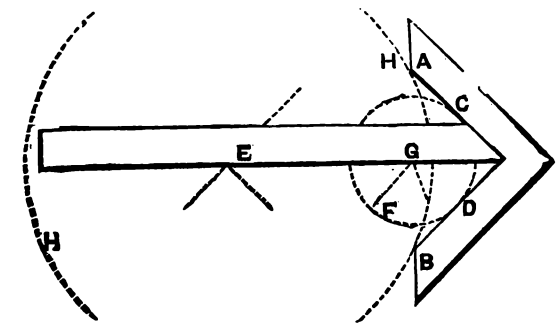

Fig. 1172.

the use of the square for ordinary purposes as well as for marking centres.

The point *a* of the centre punch shown in Fig. 1173 is then placed at the intersection of the two lines thus marked, and a hammer blow produces the required indentation. The centre punch must be held upright or it will move laterally while entering the metal. The part *b* of the centre punch is tapered so as to obstruct the vision as little as possible, while it is made hexagon or octagon at the upper end to afford a better grip. By increas-

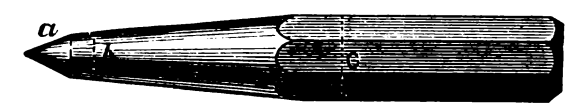

Fig. 1173.

ing the diameter at C, the tool is stiffened and is much less liable to fly out of the fingers when the hammer blow does not fall quite fair.

In Fig. 1174 is shown a device for guiding the centre punch true with the axis of the work, so as to avoid the necessity of finding the same by lines for the centres. It consists of a guide piece B and a parallel cylindrical centre punch A, C representing a piece of work. B is pierced above with a parallel hole fitting and

guiding the centre punch, and has a conical hole at the lower end to rest on the work, so that if the device be held upright and pressed down upon the end of the work, and the top of the centre punch is struck with the hammer, the indentation made will be central to the points of contact of the end of the work with the

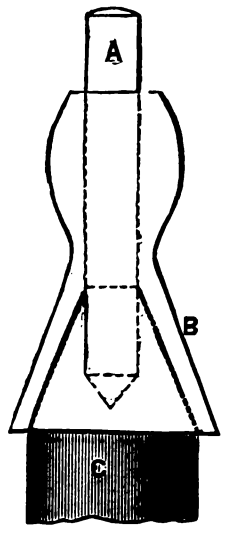

Fig. 1174.

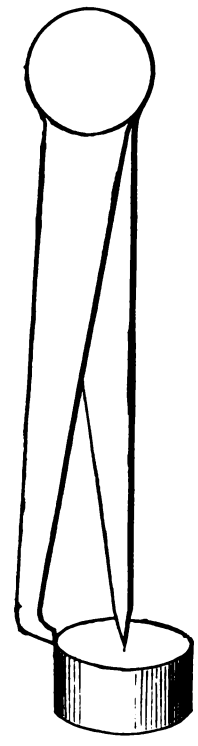

Fig. 1175.

coned hole of B. If then the end of the work has no projecting burrs the centring will be centred true.

In the absence of these devices, lines denoting the location for the conical recess or centre may be made, when either of the following methods may be pursued.

In Fig. 1175 is shown what is known as a pair of hermaphrodite calipers, which consists of two legs pivoted at the upper end; the

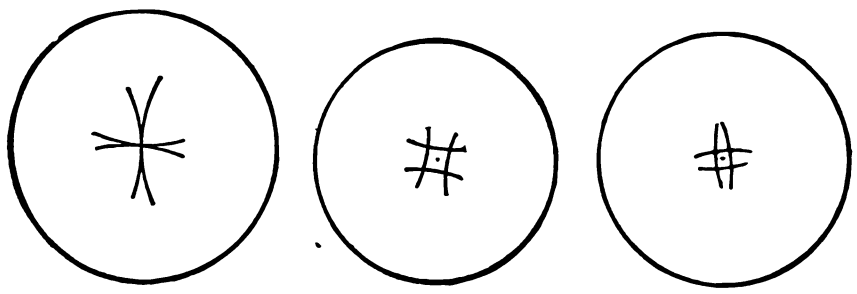

Fig. 1176. Fig. 1177. Fig. 1178.

bent leg is placed against the perimeter of the work, as shown, and held steadily, while with the point a line is marked on the work. This operation is performed from four equidistant (or thereabouts) points on the work, which will appear as shown in Fig. 1176, providing the radius to which the point was set be equal to the radius of the work. The point at which the lines meet is in this case the location for the centre. If, however, the radius to

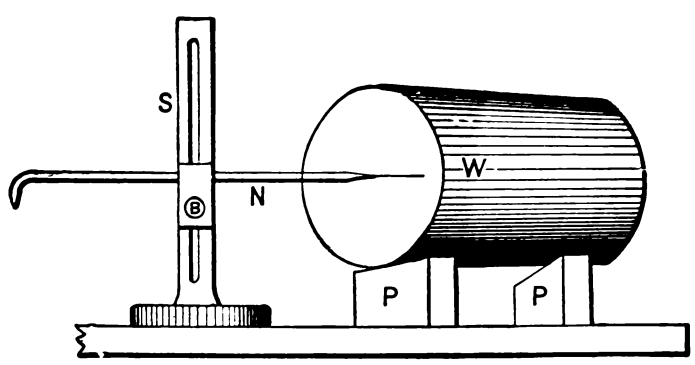

Fig. 1179.

which the points are set is less than the radius of the work, the lines will appear as in Fig. 1177, in which case the location is in the centre of the inscribed square, as denoted by the dot; or if the radius be set too great the lines will appear as in Fig. 1178, and the location for the centre will again be as denoted by the dot.

Another and very old method of marking these lines is to place the work on a pair of parallel pieces and draw the lines across it, as shown in Fig. 1179, in which W represents the work, P, P the parallel pieces of equal thickness, S a stand (termed a scribing block) carrying a needle N, which is held by a thumb screw and bolt at B. The point of the needle is adjusted for the centre of the work, a line is drawn, the work is then rotated, another line drawn, and so on, until the four lines are drawn as in Fig. 1180, when the

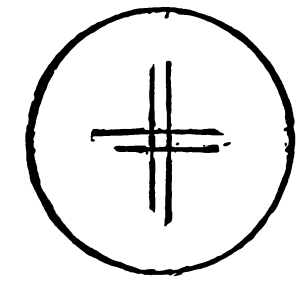

Fig. 1180.

work may be turned end for end if light, or if heavy the scribing block may be moved to the other end of the work.

The centre locations are here made true with the part of the work that rests on the parallel pieces, and this is in some cases an essential element in the centring.

Thus, in Fig. 1181, it is required to centre a piece true with the journals A B, and it is obvious that those journals may be rested on parallel pieces P, P, and the centres marked by the scribing block on the faces E, F in the manner before described.

If there is a spot in the length of a long piece of work where

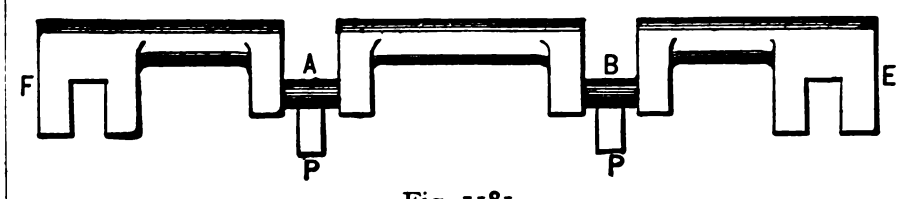

Fig. 1181.

the metal is scant and out of round, so that it is necessary to centre the work true by that part, the surface gauge and parallel pieces may be used with advantage, but for ordinary centring it is a slow process. When a piece of work is not cylindrical, and it is doubtful if it will clean up, the centring requires care, for it must not always be assumed, that if two diametrically opposite points meet the turning tool at an equal depth of cut, the piece is centred so as to true up to the largest possible diameter.

This is pointed out in Fig. 1182, which is extracted from an

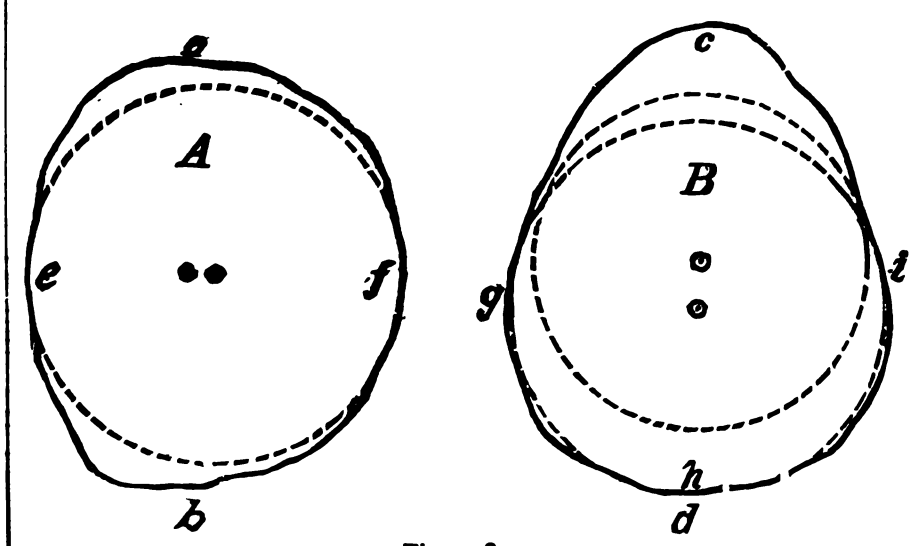

Fig. 1182.

article by Professor Sweet. "In a piece of the irregular form A, the points *a* and *b* might be even and still be no indication of the best location for the centre, and in the piece B it is evident that if *c* and *d* were even, nothing like the largest cylinder could be got from it. In the case of shape A, the two points *e* and *f* should be equidistant from the centre, and in the case of shape B, the three points *g*, *h*, *i* should be equidistant from the centre."

The depth of the centre drill holes should be such as to leave

them in the work after it is cut off to its proper length, and will, therefore, be deeper as the amount to be cut off is greater.

The diameter of the centre-drill is larger as the size of the work increases, and may be stated as about $\frac{3}{64}$ for work of about $\frac{1}{2}$ inch, increasing up to $\frac{1}{8}$ inch for work of about an inch, and up to three inches in diameter; for work of a foot or over, the centre-drill may be $\frac{3}{16}$ inch in diameter.

The centre-drilling and countersinking may, when the work is cut to length, be performed at one operation, but when it requires to be cut to length in the lathe, that should be done before the countersinking. A very simple chuck for centre-drilling is shown

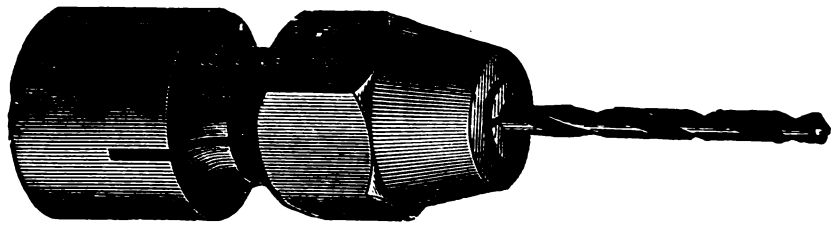

Fig. 1183.

in Fig. 1183, with a twist drill (which is an excellent tool for centre-drilling). If the work is held in the hand and fed to the drill by the lathe dead centre, the weight of the work will cause the hole to be out of straight with the work axis, unless the grip is occasionally relaxed, and the work made to rotate a half or a quarter turn as the drilling proceeds.

After the work is centre-drilled and cut off to length, it must be finally countersunk, so as to provide ample bearing area for the lathe centres.

The countersinking should be true to the centre hole; and it is sometimes made to exactly fit the lathe centres, and in other

Fig. 1184.

cases it is made more acute than the lathe centre, so that the oil may pass up the countersink, while it is bedding itself to the lathe centres.

If the countersinking is done before the end of the work is squared, it will not be true with the centre-drilled hole.

In order that the countersinking may wear true with the centre-drilled hole, it may be made of a more obtuse angle (as, say, one degree) than the lathe centre, as in Fig. 1184, so that the hole may form a guide to cause the lathe centre to wear the countersinking true to the hole, and thus correct any error that may exist.

If the countersink is made more acute than the lathe centre, as

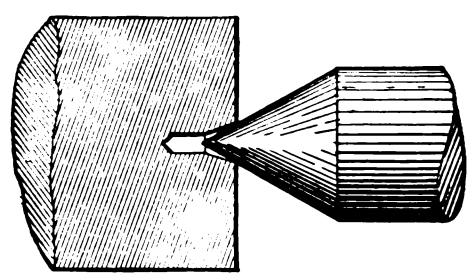

Fig. 1185.

shown in Fig. 1185, the wear of its mouth will act as a guide, causing the centre to be true with the countersinking; and when the bearing area extends to the centre-drilled hole, there will be introduced, if that hole does not run true, an element tending to cause the work to run out of true again, because the countersinking will have more bearing area on one side than on the other.

It is to be observed, however, that if the difference between the countersink angle and that of the lathe centre be not more than about one degree, the work centre will bed itself fully to the lathe centre very rapidly, and usually before the first cut is carried over the work, unless the work centres have been made to have unduly large countersinks.

Fig. 1186 represents a half-round countersink, in which the cutting edge is produced by cutting away the coned point slightly below the dotted axial line. This secures two advantages: first, it gives the cutting edge clearance without requiring the grinding or filing such clearance; and, secondly, the cone being the same angle as the lathe centres, filing away more than half of it causes it to give the lathe centre at first a bearing at the small end of the

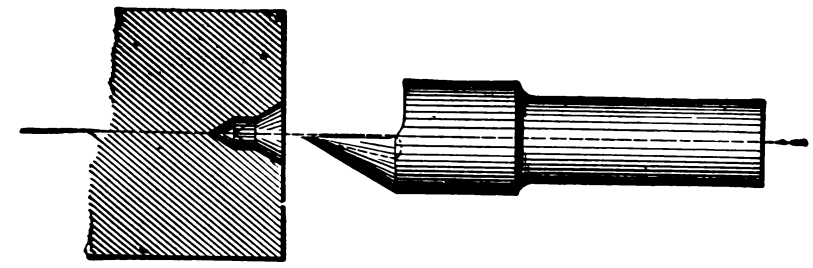

Fig. 1186.

countersink, as in Fig. 1184, and this secures the advantage mentioned with reference to that figure. It is obvious that such a reamer, however, does not produce strictly a cone countersink, as is shown in Fig. 1187, where the cutting away of the cone is carried to excess simply to explain the principle, and the cone becomes an hyperbolic curve.

The small amount, however, that it is necessary to carry the face below the line of centres, practically serves to make the cone somewhat less acute, and is not therefore undesirable.

Another method of forming the half-round countersink is shown

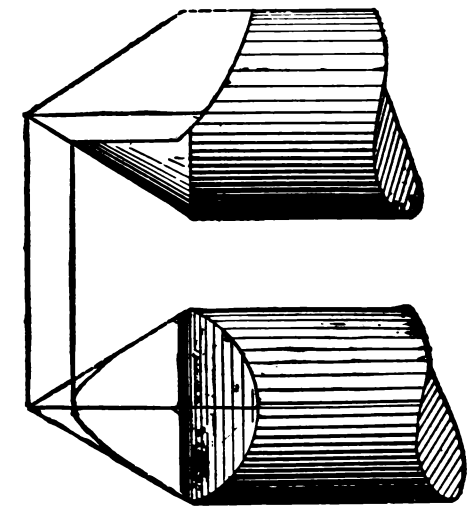

Fig. 1187.

in Fig. 1188, in which the cone is of the same angle as the lathe centres; the back A is ground away to avoid its contact with the work and give clearance, while clearance to the cutting edge is obtained by filing or grinding a flat surface B at the necessary angle to the upper face of the cone. In this case it is assumed that the centre-drilling and countersinking are true one with the other. Yet another form of countersink is shown in Fig. 1189, consisting of a cone having three or four teeth. It may be pro-

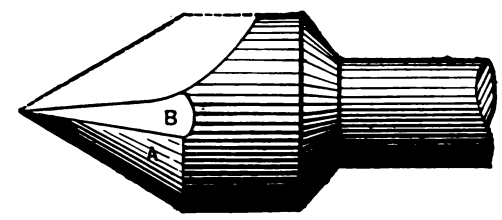

Fig. 1188.

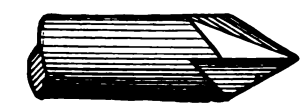

Fig. 1189.

vided with a tit, which will serve as a guide to keep the countersink true with the whole, and this tit may be made a trifle larger in diameter than the hole, and given teeth like a reamer, so as to ream the hole out while the countersinking is proceeding.

Unless one side of a half-round reamer is filed away so as to give the cutting edge alone contact with the bore of the hole, an improper strain is produced both upon the work and the countersink.

In Fig. 1190, for example, is shown, enlarged for clearness of illustration, a hole, and a half-round countersink in section, and it is evident that if the countersink is set central to the hole, it will have contact at A and at B, and A cannot enter the metal to cut without springing towards C.

But when the lathe has made rather more than one-half a revolution, the forcible contact at B will be relieved, and either the work or the countersink will move back towards D. This may be remedied by setting the countersink to one side, as in Fig. 1191,

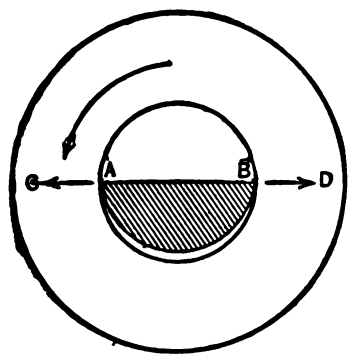

Fig 1190.

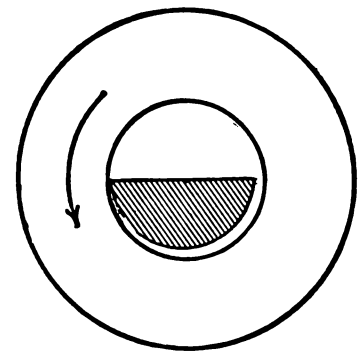

Fig. 1191.

or by cutting it away on one side, as in Fig. 1192, when the half-round reamer will, if the work be rigidly held while being countersunk, act as a cutting tool. But it is more troublesome to hold the work rigidly while countersinking it than it is to simply hold it in the hands, and for these reasons the square centre is an excellent tool to produce true countersinking.

Fig. 1193 represents a square centre, the conical end being provided with four flat sides, two of which appear at A B; or it may have three flat sides, which will give it keener cutting edges, and

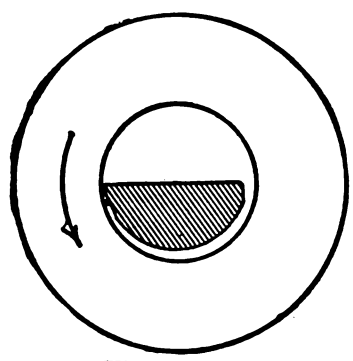

Fig. 1192.

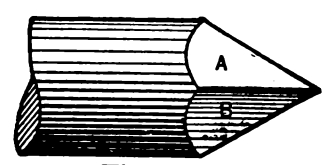

Fig. 1193.

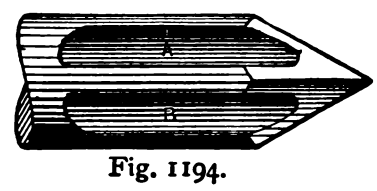

Fig. 1194.

will serve equally well to keep it true with the drilled hole. But it is questionable whether it is not an advantage not to have the cutting edges so keen as is given by the three flat faces, because the less keen the cutting edges are, the more true the countersinking will be with the hole, the extra pressure required to feed the square centre tending to cause it to remain true with the hole notwithstanding any unequal density of the metal on different sides of the hole. An objection to the square centre is that it involves more labor in the grinding to resharpen it, and is not so

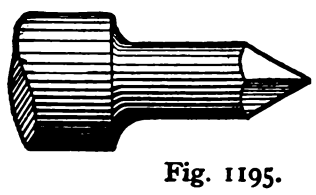

Fig. 1195.

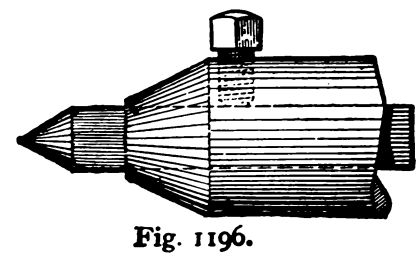

Fig. 1196.

easy to grind true, but for fine work this is more than compensated for in the better quality of its work.

This labor, however, may be lessened in two ways: first, the faces may be fluted, as in Fig. 1194, at A and at B, or its diameter may be turned down, as in Fig. 1895. In using the square centre it is placed in the position of the live centre and revolved at high speed, all the cutting edges operating simultaneously; the work is fed up by the dead centre and held in the hand.

To prevent the weight of the work from causing the countersinking being out of true with the whole, the work should be occasionally allowed (by relaxing the grip upon it) to make part of a revolution, as explained with reference to centre-drilling without a work guide. Another and simple form of square centre for countersinking is shown in Fig. 1196. It consists of a piece of square steel set into a stock or holder.

Work that is to be hardened and whose centres are, therefore, liable to warp in the hardening, may be countersunk as in Fig.

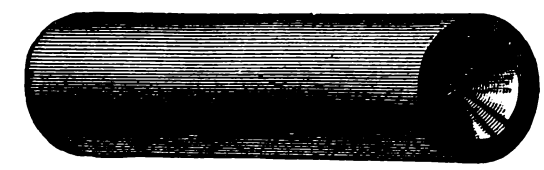

Fig. 1197.

1197, there being three indentations in the countersink as shown. This insures that there shall be three points of contact, and the work will run steadily and true. Furthermore, the indentations form passages for the oil, facilitating the lubrication and preventing wear both to the work and to the lathe centres.

These indentations are produced after the countersinking by the punch, shown in Fig. 1198. Except when tapers are turned by

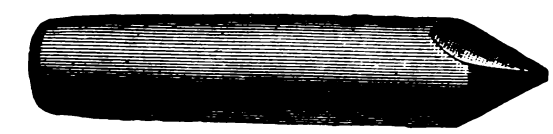

Fig. 1198.

setting the lathe centres out of line with the lathe shears (as in setting the tailstock over), all the wear falls on the dead centre end of the work, as there is no motion of the work centre on the live centre, hence the work centres will not have worn to a full bearing until the work has been reversed end for end in the lathe.

If it be attempted to countersink a piece of work whose end face is not square, the countersinking will not be true with the

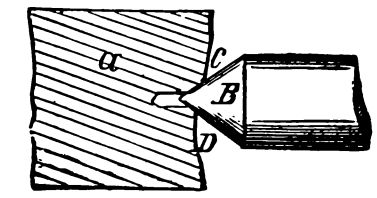

Fig. 1199.

centre hole, and furthermore the causes producing this want of truth will continue to operate to throw the work out of true while it is being turned. Thus, in Fig. 1199, *a* represents a piece of work and B the dead centre; if the side C is higher than side D of the work end, the increased bearing area at C will cause the most wear to occur at D, and the countersink in the work will move over towards D, and it follows that the face of a rough piece of

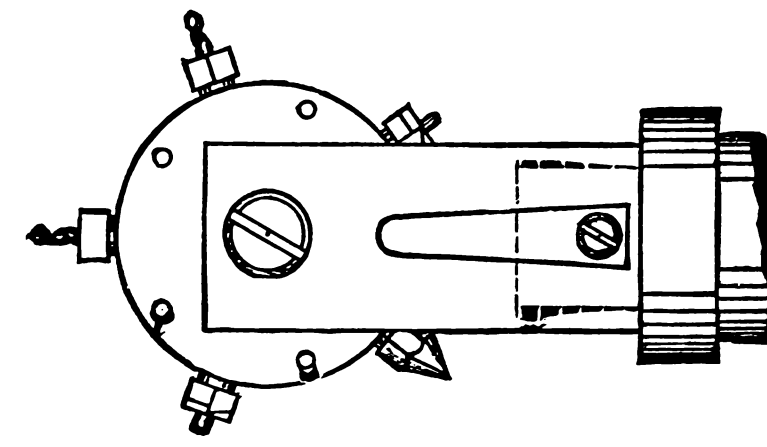

Fig. 1200.

work should be faced before being countersunk. Professor Sweet designed the centre-drilling device shown in Fig. 1200, which consists of a stock fitting the holes for the lathe centres, and carrying what may be called a turret head, in which are the centre drills, facing tools, and countersinks. The turret has 6 holes corresponding to the number of tools it carries, and each tool is held in

position by a pin, upon a spring, which projects into the necessary hole, the construction being obvious. The facing tool is placed next to the drill, and is followed by a countersink, in whatever direction the turret is rotated to bring the next tool into operation. The work should, on account of the power necessary for the facing, be driven in a chuck.

A similar tool which may, however, be used for other work, besides centring and countersinking, is shown in Fig. 1201. It consists of a stem fitting into the hole of the tail spindle, and carrying a base having a pin D, on which fits a cap having holes *b*, and set-screws C, for fastening drills, countersinks, or cutting tools. The

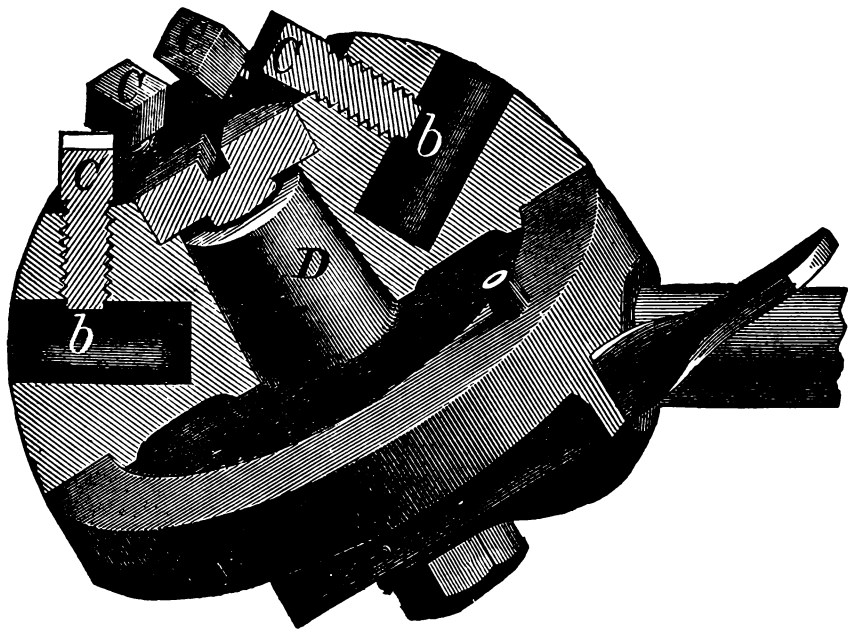

Fig. 1201.

cap is pierced with six taper holes, and a pin projects through the base into these holes to lock the cap in position, this pin being operated by the spring lever shown.

Work that has already been turned, and has had its centres cut off, may be recentred as follows: One end may be held and driven by a chuck, while the other end is held in a steady rest, such as was shown in Fig. 802, and the centre may then be formed in the free end by a half-round reamer, such as shown in Fig. 1190, placed in the position of the dead centre, or the square centre may be used in place of the dead centre, being so placed that one of its faces stands vertically, and, therefore, that two of its edges will operate to cut. The location for the work centre should be centre punched as accurately as possible, and the work is then placed in the lathe with a driver on it, as for turning it up; a crotch, such as shown in Fig. 1202, is then fastened in the lathe tool post, and fed

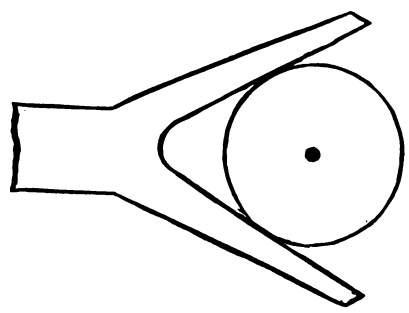

Fig. 1202.

up by the cross-feed screw until it causes the work to run true, and the square centre should then be fed slowly up and into the work, with a liberal supply of oil. If the work runs out of true, the crotch should be fed in again, but care must be taken not to feed it too far. So long as the square centre is altering the position of the centre of the work, it will be found that the feed-wheel of the tail-stock will feed by jumps and starts; and after the feeding feels to proceed evenly, the crotch may be withdrawn, and the work tried for being true. The crotch, as well as the square centre, should be oiled to prevent its damaging the work surface. It is obvious that in order to prevent the lathe dead centre point from seating at the point or bottom of the work centre, the square centre should be two or three degrees more acute in angle than the lathe dead centre. If the work is tried for truth while running on the square centre, the latter is apt to enlarge the work centre, while the work will not run steadily, hence it is better (and necessary where truth is a requisite) to try the work with the dead centre in place of the square one.

In thus using a square centre to true work, great care should be taken not to cut the work centres too large, and this may be avoided by making the temporary centre-punch centres small, and feeding the crotch rapidly up to the work, until the latter runs true, while the square centre is fed up only sufficiently to just hold the work steady.

To test the truth of a piece of rough work, it may, if sufficiently light, be placed between the lathe centres with a light contact, and rotated by drawing the hand across it, a piece of chalk being held in the right hand sufficiently near to just touch the work; and if the chalk mark extends all around the work, the latter is as true as can be tested by so crude a test, and a more correct test may be made by a tool held in the tool rest. If the test made at various positions in the length of the work shows the work to be bent enough to require straightening, such straightening may be done by a straightening lever.

It is highly injurious to a lathe to attempt to straighten work held either between its centres or in a chuck by means of exerting a pressure upon it, either by means of a lever or other device. If it be held between lathe centres it not only damages them, but also strains the lathe; while if the work be held in a chuck, the lathe as well as the live spindle of the lathe may be damaged. Work straightened by direct hammer blows is apt to run out of true again when the skin or surface is turned off, hence a swage and a piece of copper beneath it should always be used.

Under the modern system, however, of manufacturing machines in numbers, each part of each machine being made to gauge so that the parts for, say, a dozen machines may all be together, and any of the parts will fit together without individual fitting to the parts to which they are connected, the centring of all the lathe work is done in a centring machine, an improved form of which is shown in Plate LIX., which represents the D. E. Whiton Machine Company's machine. A novel feature of this machine is that the two chucks holding the respective ends of the work are connected by gearing, so that operating one hand wheel operates both chucks, and insures that the work be held exactly in line with the centre drill which is essential to the production of true work.

The construction of this machine is as follows:

Fig. 1 (Plate LIX.) is a general view of the machine. Fig. 2, a side elevation showing the head in section. Fig. 3, a plan partly in section. Fig. 4, a cross section of the head, and Fig. 5, an end elevation of the chuck, showing a part of the bed or shears in cross section.

The driving pulley runs loose on a stud fixed in one end of the head, and at the other end, and in line with this stud, is a second stud; these two forming the pivots upon which the upper part of the head swings back and forth to bring the spindles alternately into line, there being two of these spindles, one for drilling and the other for countersinking, lying parallel with each other, as shown.

Inside the pulleys are two pinions which revolve with it, the larger of the two driving the drilling spindle, as shown in Fig. 1, while the smaller one drives the countersinking spindle at a slower speed.

Back of the spiral spring, which is shown on the drilling spindle in Figs. 2 and 3, is a space between two collars fixed on the spindle, into which is fitted a half sleeve having on its lower side a short rack.

One of these sleeves is shown in longitudinal section in Fig. 2, and both of them in cross-section below the spindles in Fig. 4. The sides of the racks fit closely in square openings provided for them in the swinging head, so that they have a longitudinal movement through the head, but no lateral movement except as the

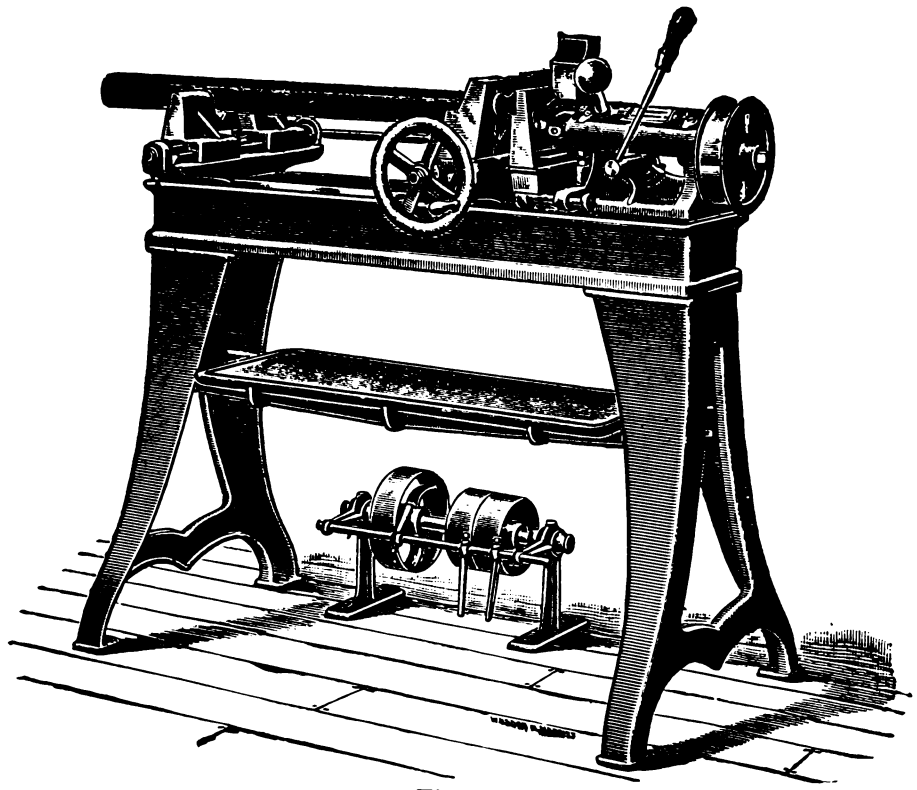

Fig. 1.

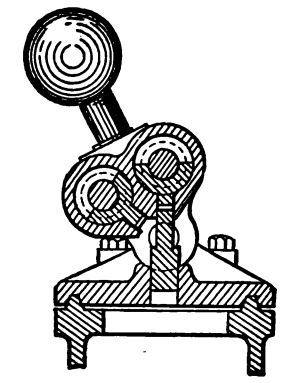

Fig. 4.

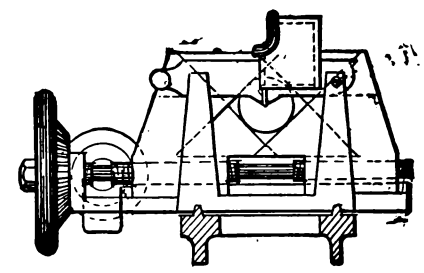

Fig. 5.

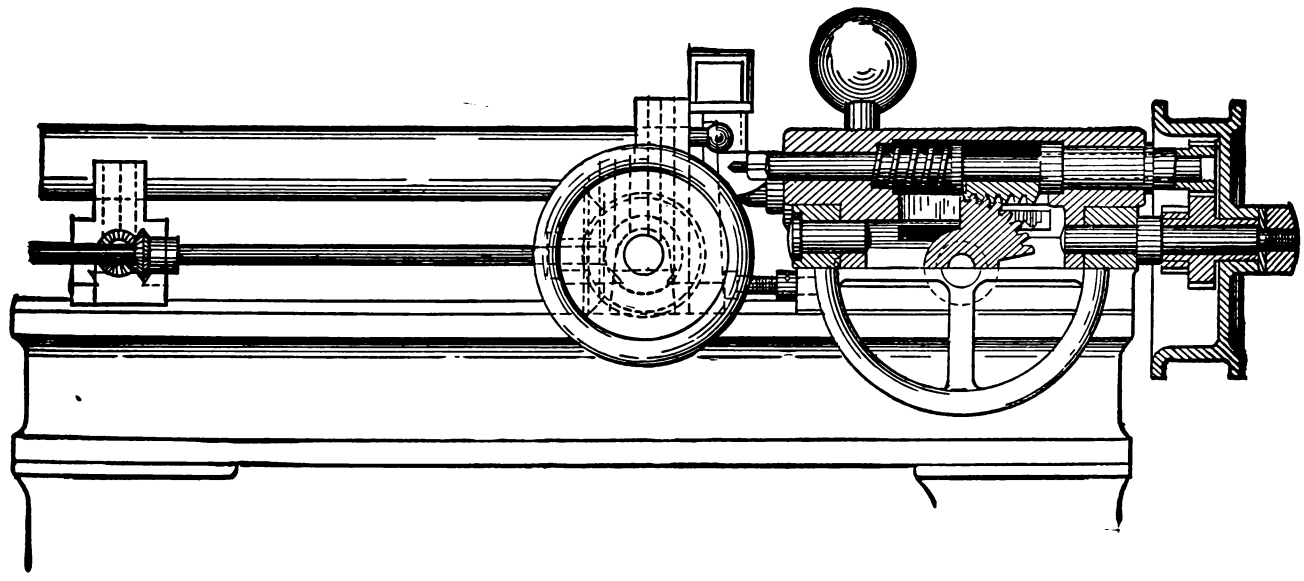

Fig. 2.

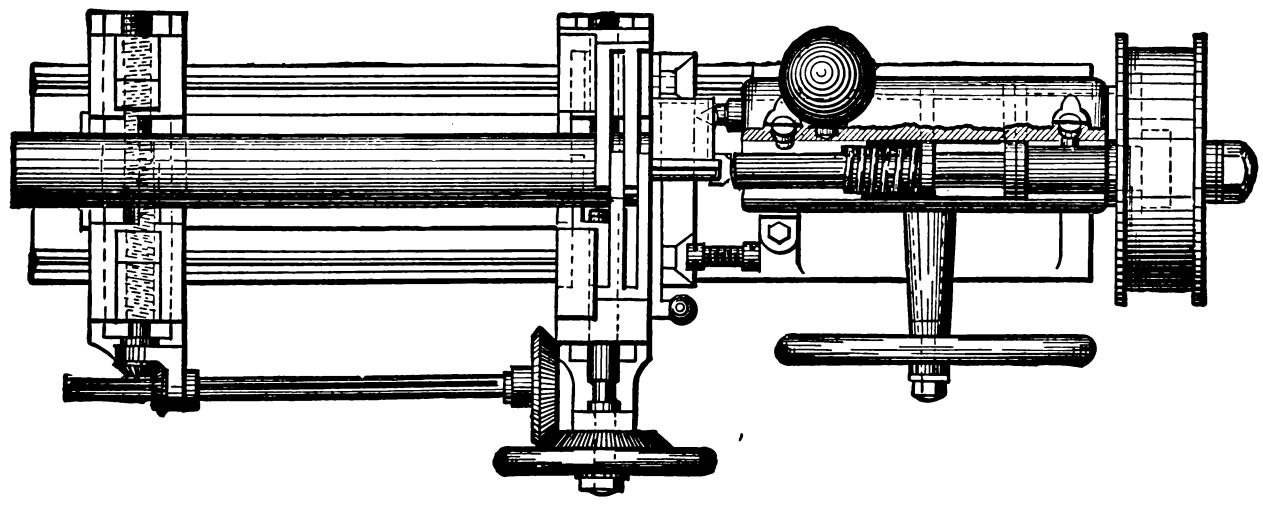

Fig. 3.

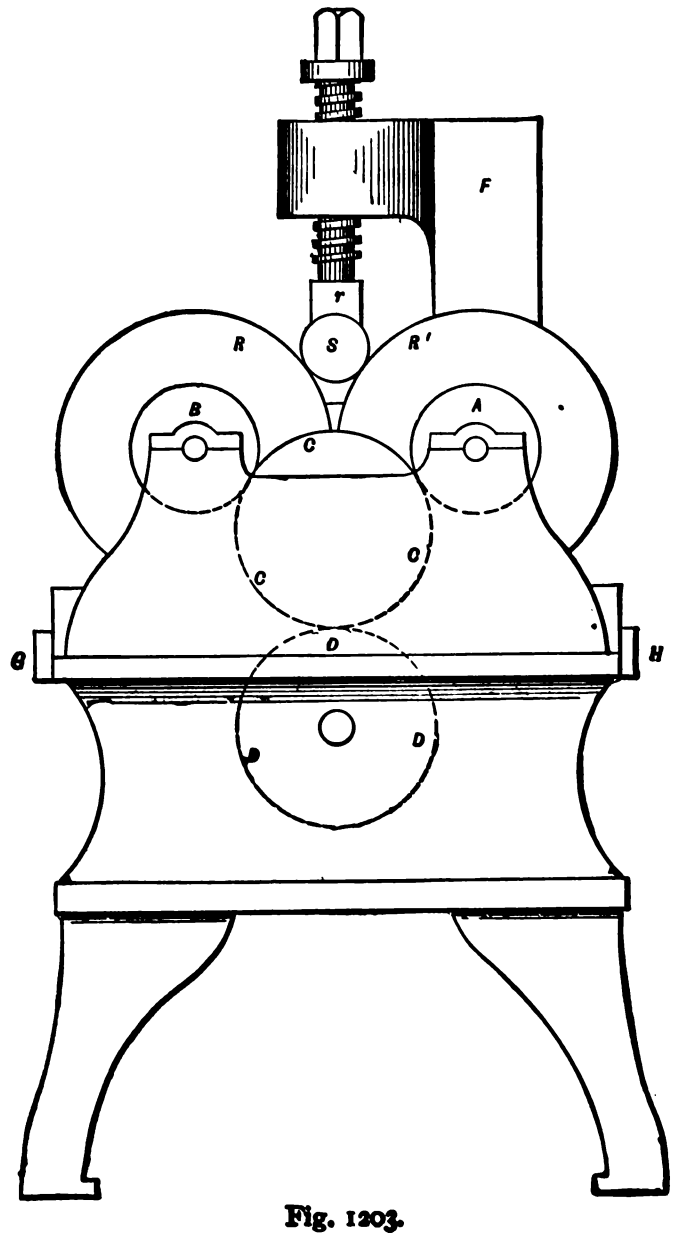

Fig. 1203.

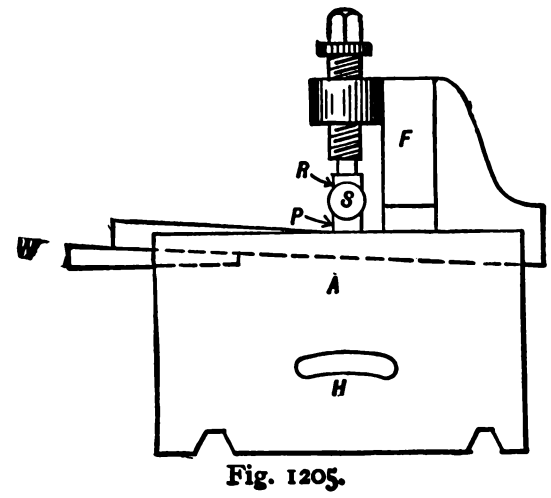

Fig. 1205.

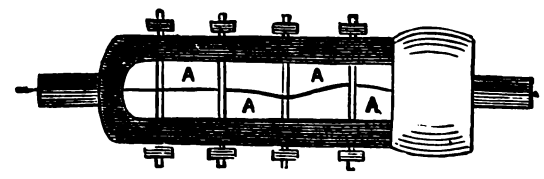

Fig. 1206.

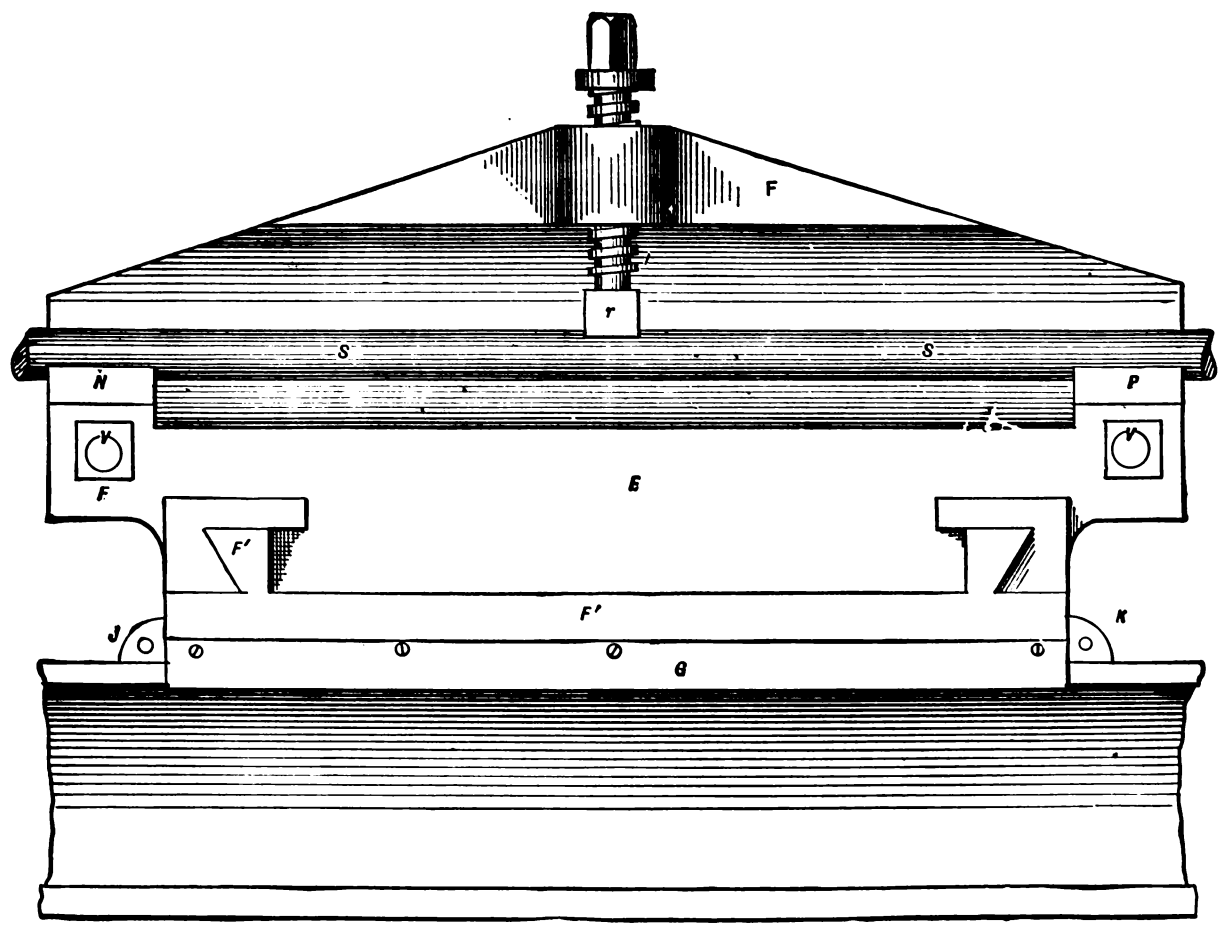

Fig. 1204.

head is swung. When the head is swung forward or back, one or the other of these racks comes into engagement with a sector which is fixed on a transverse shaft that passes through the head, and is moved by the hand-wheel or lever as shown. When either spindle is brought into line, the opening in which its rack slides comes in line with the gear segment, which allows it to be advanced, and when it is so advanced the segment acts as a key and prevents any lateral motion until it is returned. In any other position the end of the segment comes against solid metal in the swinging head, which prevents its being moved.

The chuck is made with V-jaws, which are moved to or from each other by right and left hand screws. The jaws next the head close over the work and grip it, while those at the other end pass under the work only which rests on them; but as they are of the same form as the lower half of the other jaws, and move with them by means of the connecting shaft and gears, the work is held in line with the centre at both ends, regardless of its diameter.

A positive stop is provided on the chuck, which can be swung down, and the end of the work brought against it in putting it into the chuck ; this, in connection with stops provided for each spindle, securing absolute uniformity in the depth of drilling and reaming.

The stop plate on the chuck has an oil tank attached, and provision is made for thorough lubrication of the cutting tools.

It is obvious that there is a great saving of time in cutting off work to its proper length before putting it in the lathe, because in that case all measurements can be taken from the end of the work that is free. Thus when the work is driven from one end, which is therefore hidden by the dog or driver or carrier that revolves it, that end is not available for measurement, and the measurements must be taken from the free or dead-centre end. When, however, the work is reversed end for end in the lathe, it is advisable to take the measurements of the unfinished part from some part that is finished and made to standard length. Thus, suppose there is on the work a collar or flange, and at the first finishing cut this collar or flange has been made of correct length, then it may be used as a standard or starting point from which to measure the remaining lengths when the work is reversed in the lathe, thus avoiding the errors that might occur from measuring the lengths of one half or portion of the work from one end and the other half or portion from the other. Of course, if the blank for the work is cut to the exact measurement it would make no difference which end the measurements were taken from ; but if that is not the case the workman will be sure that his part of the work is correct by adopting the foregoing plan of verifying each measurement for himself, which he ought to do in all cases.

When very exact measurements are required the workmen will do well to take care that each measurement is taken with the work at the same temperature, because if the work gets hot it will measure larger than it will if it is cold, and a very good plan is to get a pail of water at a temperature of 60 degrees, and immerse the work in it long enough to insure that the work is at that temperature before taking each individual measurement. Furthermore, it must be borne in mind that even handling the work will lengthen it and increase its diameter from the heat or warmth that is conveyed from the hand to the work, even though it be of comparatively large diameter, say 5 or 6 inches. This will be the case more especially with work of copper or brass, which expand more under a given temperature than cast iron, wrought iron, or steel.

It follows from this that no small work can be measured for refined measurement while it is running in the lathe, because it will be to some extent heated and therefore expanded.

These precautions are not necessary in ordinary machine shop work, but they are decidedly essential when standard gauges or work of that class is to be measured.

The standard temperature for measurements of this kind is 60 degrees Fahrenheit.

In shops where large quantities of shafting are produced, there are special straightening tools or devices: Thus Figs. 1203 and 1204 (Plate LX.) represent two views of a straightening machine. The shaft to be straightened is rotated by the friction caused by its own weight as it lies between rollers, which saves the trouble of placing the shaft upon centres. Furthermore, the belt that is the prime mover of the gears driving these rollers is driven from the line shaft itself, without the aid of any belt-pulley. The tension of this driving belt is so adjusted that it will just drive the heaviest shaft the machine will straighten; but if the operator grasps the shaft in his hand, the driving mechanism will stop and the belt will slip, the shaft remaining stationary until the operator sets it in motion again with his hand, when the belt ceases to slip and the mechanism again acts to drive the shaft.

Fig. 1203 represents the mechanism for driving the shaft S to be straightened, which lies upon and between two rollers R, R′. Upon the shafts of these rollers are the gear wheels A and B, which are in gear with wheel C, the latter being driven by gear wheel D. Motion to D is derived from a pair of gears, the pinion of which is driven by the belt from the line shaft. H is a head carrying all these gears (and the rollers) except D. There are two of these heads, one at each end of the machine, the two wheels D being connected by a rod running between the shears, but the motion is communicated at one end only of this rod, the shaft is driven between four rollers, of which two, R, R′, are shown in the engraving.

In Fig. 1204 the straightening device is shown. A frame consisting of two parts F, F′ is gibbed to the edge of the shears at G and H. The upper part of this frame carries a square threaded screw *l*, and is capable of sliding across the shears upon the part F′. It rests upon the shears through the medium of four small rollers (which are encased), two of which are at J, K, and two are similarly situated at the back of the frame F′. The motion of F across the machine is provided so that the upper part F may be pushed back out of the way, to permit the shaft being easily put on and taken off the friction rollers R, R′. The motion along the shears is provided to enable the straightening device to be moved to the required spot along the shaft S′. The shaft S is laid on two pieces N, P and a similar piece *r* is placed above to receive the pressure of the screw *l*, which is operated by a hand lever to perform the straightening. The pieces N, P rest upon two square taper blocks V, which are provided with circular knobs at their outer ends to enable them to be held and pushed in or pulled out so as to cause N, P to meet the shaft before *l* is operated. This is necessary to accommodate the different diameters of shaft S. The operator simply marks the rotating shaft with chalk in the usual manner to show where it is out of true, and then straightens wherever it is found necessary.

Fig. 1205 represents a similar device for straightening rods or shafts while they are in the lathe. A is a frame or box which is fitted to rest on the Vs of the lathe shears, the straightening frame resting on the box. Instead, however, of simply adjusting the height of the pieces P to suit different diameters of the shaft, the whole frame is adjusted by means of the wedge W, which is inserted between the frame F and the upper surface of the box A. At H is a hole to admit the operator's hand to move A along the lathe shears.

A method of straightening wire or small rods that are too rigid to be straightened by hand, and on which it is inadvisable to use hammer blows is shown in Fig. 1206. It consists of a head revolved in a suitable machine, and having a hole passing endways through it. In the middle is a slot and through the body pass the pins A, being so located that their perimeters just press the rod or wire when it is straight, and in line with the axis of the bore through the head, each successive pin A touching an opposite side of the wire or rod. It is obvious that these pins in revolving force out any crooks or bent places in the wire or rod, and that as the work may be pulled somewhat rapidly through the head or frame, the operation is a rapid one.

When pieces of lathe work are to be made from rod or bar iron, they should be cut off to the proper length in a cutting-off machine, such as described in special forms of the lathe, and for the reasons set forth in describing that machine.

An excellent tool, however, for cutting up rods of not more than ½ inch in diameter, is Elliott's cutting-off tool, shown in Fig. 1207. It consists of a jaw carrying steadying pieces for the rod to be cut up, these pieces being adjusted to fit the rod by the screw and nut shown. On the same jaw is pivoted a tool-holder carrying a

cutting-off tool, which is fed to its cut by the upper handle being pressed towards the lower one.

An adjustable stop or gauge is attached, by means of a small rod, to the swinging arm which carries the cutting tool, and can be removed when its use is not desirable.

The operation of this tool is as follows:—The rod to be cut up is held in the lathe chuck, projecting beyond any desired distance, and arranged to revolve at the same speed as for turning. The tool is placed upon the rod, and the movable jaw of the rest adjusted to a bearing. If several pieces are to be cut to a length, the gauge is adjusted, the tool moved along the rod till the gauge-stop comes in contact with the end, the handles pressed together, which moves the cutting tool up to the work in such a way that it will come exactly to the centre, thus cutting the piece entirely off, no adjustment of the tool ever being necessary to provide for its cutting to the centre, except keeping the cutting edge (which is not in this respect changed by grinding) at a distance specified in the directions from the part in which it is clamped. As the tool is moved up to cut, by the same operation the gauge is moved back out of contact with the end. When the pressure on the handles is removed, a spring returns the cutting tool to its original position, and also brings the gauge in position for determining the length of the next piece to be cut. The operation is repeated by simply moving the tool along the rod, the cutting up being done with great rapidity and accuracy. It will be noticed that all the appliances for cutting, gauging, &c., being a part of the tool itself, if the rod runs out of truth—in other words, wabbles—it will have no effect on the cutting, the rod to be cut forming the gauge for all the operations required; also that comparatively no time is lost in adjustment between the several pieces to be cut from a rod.

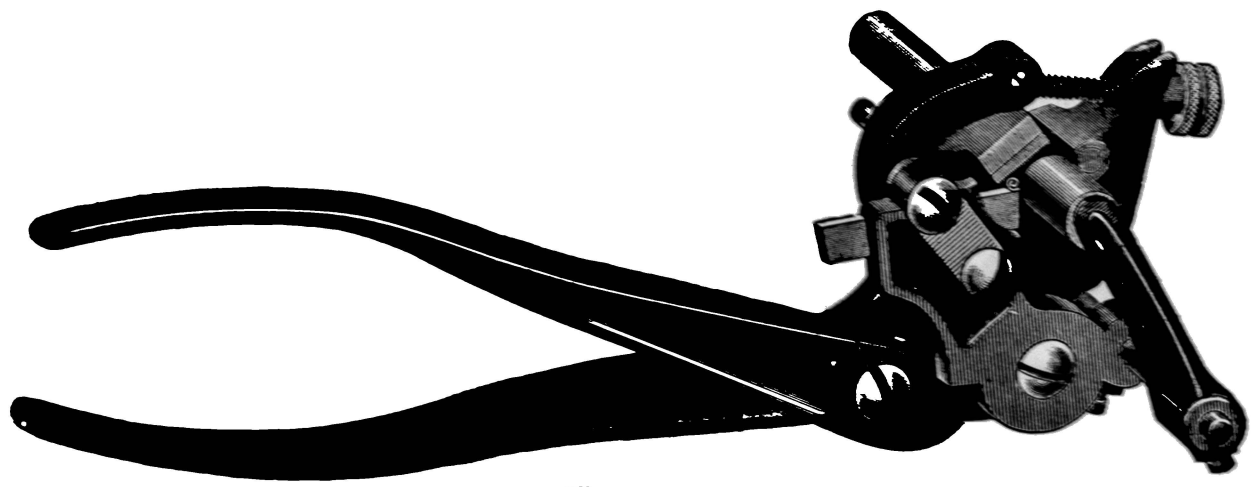

Fig. 1207.

The cutting tool is a piece of steel of the proper thickness, cleared on the sides by concave grinding. It is held in place by a clamp and two small screws, and requires grinding on the end only.

When the work is centred, it should, for reasons already explained, have its end faces trued up.

In doing this, however, it is desirable in some cases to cut off the work to its exact finished length. This possesses the advantage, that when the work is finished, the work centres will be left intact, and the work may be put into the lathe at any time, and it will run true to the original centres. But this is not always the best plan; suppose, for example, that there are a number of collars or flanges on the work, then it is better to leave a little extra length to the work when truing up the ends, so that if any of the collars are scant of metal, or if it be desirable to turn off more on one side of a collar than on another, as may be necessary to turn out a faulty place in the material, the end measurements on the work may be conformed to accommodate this requirement, and not confined to an exact measurement from the end of the work.

Again, in the case of work having a taper part to be fitted, it is very difficult to obtain the exact proper fit and entrance of taper to an exact distance, hence it is best to leave the work a little too long, with its collars too thick, and to then fit the taper properly and adjust all other end measurements to suit the taper after it is fitted.

Before any one part of a piece of work turned between the lathe centres is finished to diameter, all the parts to be turned should be roughed out, and for the following reasons, which apply with additional force to work chucked instead of being turned between the lathe centres.

It is found, that all iron work changes its form if the surface metal be removed from it. Thus, though the lathe centres be true, and a piece of work be turned for half its length in the lathe, after it has been turned end for end in the lathe to turn the other half of its length, the part already turned will run out of true after the second half is turned up. This occurs from the tension and unequal internal strains which exist in the metal from its being forged or rolled at a constantly diminishing temperature, and from the fact that the surface of the metal receives the greatest amount of compression during the forging.

In castings it is caused by the unequal and internal strains set up by the unequal cooling of the casting in the mould, because of one part being thicker than another.

When the whole of the work surfaces have been cut down to nearly the finished size, this alteration will have taken place, and the finishing may be proceeded with, leaving the work as true as possible. In chucked work, or the most of it rather, it is impracticable (from being too troublesome) to rough out all over before finishing; hence at each chucking all the work to be done at that chucking is finished.

The roughing cuts on a piece of work should always be taken with as coarse a feed as possible, because the object is to remove the mass of the metal to be cut away rather than to produce a finish, and this may be most quickly done by a deep cut and coarse feed. Theoretically also the finishing should be done with a coarse feed, since the coarser the feed, the less the length of time the cutting edge is in action. But the length of cutting edge in action, with a given tool and under a given depth of cut, increases as that edge is made longer to carry the coarse feed, and the long cutting edge produces a strain that tends to spring or bend the work, and that causes the tool to dip into seams or soft spots, or into spongy or other places, where the cutting strain is reduced, and also to spring away from hard spots or seams, where the cutting strain is increased. The most desirable rate of feed, therefore, is that which is as coarse as can be used without springing either the work or the tool, and this will depend upon the rigidity of the work of the lathe, and of the cutting tool. Short or slight work may be turned very true by a light cut fine feed and quick cutting speed, but the speed must obviously be slower in proportion as the length of the work increases, because the finishing cut should be taken without taking the tool out to resharpen it, since it is very difficult to set the tool to the exact proper depth a second time.

Since the cutting edge will, at any given rate of cutting speed, retain its keenness better for a given surface of work in proportion as the time it is under duty is diminished, it follows, therefore, that the coarser the feed the better (so long as both the work and the tool are sufficiently rigid to withstand the rate of feed without springing).

Under conditions of rigidity that are sufficiently favorable a tool, such as in Fig. 948, may be used on wrought or cast iron, at

a feed of $\frac{1}{2}$ or even $\frac{3}{4}$ inch of traverse per lathe revolution, producing true and smooth work, providing that the tool be given a very slight degree of clearance, that its cutting edge is ground quite straight, that it is set parallel to the line of feed, or what is the same thing, to the work axis, and that the length of cutting edge is greater than the amount of tool traverse per lathe revolution, as is shown in the figure, the amount of tool traverse per lathe revolution obviously being from A to B. It may also be observed that the leading corner of the tool may with advantage be very slightly rounded as shown, so that there shall be no pointed corner to dull rapidly.

In proportion as the work is light and the pressure of the cut may spring it, the feed must be lessened, so that on very slender work a feed of 100 lathe revolutions per inch of tool travel may be used. On cast-iron work the feeds may be coarser than for wrought-iron, the other conditions being equal, because cast iron cuts easier and therefore springs the work less for a given depth of cut. But since cast iron is apt to break out, exposing the pores of the metal, and thus leaving small holes plainly visible on the work surface, the finishing cut should be of very small depth, indeed a mere scrape; and if the surface is to be polished, a fine feed and a quick speed will leave a cleaner cut surface, and one that will require the least polishing operations to produce a clean and spotless surface. Brass work also is best finished with a fine feed and a quick speed.

It is obvious that the top face of the tool should be given more rake for wrought iron than for cast iron or steel, and that in the case of the very fine feeds, the form of tool shown in figure is the best for finishing these metals.

In turning a number of pieces requiring to be of the same diameter, it is to be borne in mind that a great part of the time is consumed in accurately setting the tool for the finishing cut, and that if one piece is finished at a time, this operation will require to be done separately for each piece.

It is more expeditious, therefore, to rough all the pieces out, leaving enough metal for a fine finishing cut to be taken, and then finish these pieces without moving the tool; which may be done, after the tool is once set, by letting the tool stand still at the end of the first finishing cut, and taking the work out of the lathe. The carriage is then traversed back to the dead centre, and another piece of work is put in, and it is obvious that as the cross-feed screw is not operated after the tool is once set, the work will all be turned to the same diameter without any further measuring than that necessary for the first piece.

If the tool is traversed back to the dead centre before the lathe is stopped or before the work is removed from the lathe, one of two results is liable to follow. If the lathe is left running, the tool will probably cut a spiral groove on the work, during its back traverse; or if the lathe be stopped, the tool point will mark a line along the work, and the contact of the tool point with the work will dull the cutting edge of the tool. The reason of this is as follows: When the slide rest and carriage are traversing in one direction, the resistance between the tool and the cut causes all the play in the carriage and rest, and all the spring or deflection of those parts, to be in an opposite direction. Now if the play and spring were precisely equal for both directions, the tool should cut to an equal diameter with the carriage traversed in either direction, but the carriage in feeding is fed by the feed nut or friction feed device, while when being traversed back the traversing handle is used; thus the power is applied to the carriage in the two cases at two different points, hence the spring of the parts, whether from lost motion, or play from wear, or from deflection, is variable. Again, even with the tool fed both to its cut and on the back traverse with the hand feed handle, the play is, from the altered direction of resistance of the cut, reversed in direction, and the depth of cut is therefore altered.

Thus, in Fig. 1208, let S S represent the cross slide on the carriage and R R the cross slide of the tool rest shown in section, and suppose the tool to be traversing towards the live centre, then to whatever amount there may be play or spring between the slide and the slide way, the slide will from the pressure of the cut twist over, bearing against the slide way at A and B, and being clear of it at G and H. On reversing the direction of traverse of the rest, so as to feed the tool towards the dead centre, the exactly opposite condition will set in, that is, the pressure of the cut will force the slides in the opposite direction, or in other words, the contact will be as in Fig. 1029, at C, D, and the play at E, F. During the change of location of bearing between the slides and the way, there will have been a certain amount of tool motion altering the distance of the tool point from the line of centres, and therefore the diameter to which it will cut. The angle at which the body of the tool stands will influence the effect: thus, if when traversing towards the live centre the tool stands at an angle pointing towards the live centre, it would recede and cause the tool to clear the cut, if removed on the back traverse without being moved to or from the line of centres. Conversely, if the body of the tool was at an angle, so that it pointed towards the dead centre, and a cut was taken towards the live centre, and the tool was traversed back without being moved in or out, it would take another cut while being moved back.

The conditions, however, are so uncertain, that it is always advisable to be on the safe side, and either wind the tool out from its cut before winding the rest and carriage back (thus destroying its set for diameter), or else to stop the lathe and remove the work before traversing the carriage back as already directed. If the latter plan is followed the trouble of setting the tool is avoided and much time is saved, while greater accuracy of work diameter is obtained. It is obvious that this plan may be adopted for roughing cuts in cases where two cuts only are to be taken, so as to leave finishing cuts of equal depths; or if three cuts are to be taken, it may advantageously be followed for the second and last cuts, the depth of the first cut being of less importance in this case.

The following rules apply to all tools and metals:

When the pressure between the tool and the work is sufficient, from the proportions of the work, to cause the work to spring or

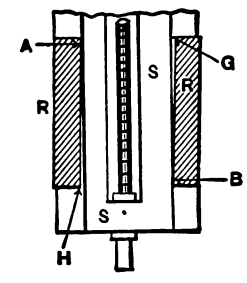

Fig. 1208.

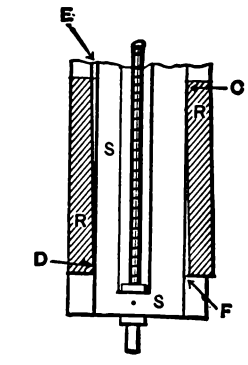

Fig. 1209.

bend, the length of acting cutting edge on the tool should be reduced.

As the diameter and rigidity of the work increases, the length of tool cutting edge may increase. The cutting edge of the tool should be kept as close as the work will conveniently admit to the slide rest tool post, $\frac{1}{4}$ *inch even* of this distance being *important.*

The slide rest tool should always be resharpened to take the finishing cut, with which, for wrought iron or steel, soapy water with soda in it should be used, the soda serving to prevent the dripping water from rusting the parts of the lathe.

Cast iron will cut with an exquisite polish if finished at a *very slow* rate of cutting speed, and turned with a spring tool, such as was shown in Fig. 974, and water is used. But being a slow process it is not usual to finish it in this manner, though for round corners, curves, &c., this method is highly advantageous.

For cast iron the tool should be as keen as the hardness of the metal of the work will permit. If an insufficiently keen tool, or too deep a cut, or too coarse a feed be taken, the metal will break out instead of cutting clean, and numerous fine holes will be perceived over the whole surface, impairing that dead flatness which is necessary to an even and fine polish.

To remove these specks or holes in cylindrical work, the file may be used, but for radial faces hand-scrapers, such as shown in Fig. 1295, are used, the work rotating in either case at high speed. Such scrapers are oilstoned and held with the handle end above the horizontal level.

The *rest* should be so conformed to suit the shape of the work, that the scraper will be supported close to the work, which will

prevent chattering, and a piece of leather should (as a further preventive of chattering) be placed beneath the scraper. A very good method of using a scraper is to adjust it to the work, and holding it still on the rest, traverse the slide rest to move the scraper to its cut.

After the scraping, three methods of polishing radial faces are commonly employed; the first is to use emery paper only, and the second is by the use first of grain, emery, and oil, and the subsequent use of emery paper or cloth, and the third is by the use of emery wheels and crocus cloth.

If the work is finished by emery paper only, and it requires much application of the same to efface the scraper marks, the evil will be induced that the emery cuts out the metal most where it is most porous, so that the finished surface is composed of minute hills and hollows, and the polish, though bright and free from marks, will not have that dead flat smooth appearance necessary to a really fine polish and finish; indeed, the finish is in this case to some extent sacrificed to obtain the polish.

It is for this reason that stoning the work (as hereafter described) is resorted to, and that grain emery and lead is employed, which is done as follows:—

For a flat radial face, a flat piece of lead, say $\frac{3}{8}$ inch thick, and of a size to suit the work, may be pivoted to the end of a piece of wood of convenient length and used with grain emery and oil, the work rotating quickly. To afford a fulcrum for the piece of wood, a lever or rest of some kind, as either a hand rest or a piece fastened in the tool post, is used.

The rest should be placed a short distance from the work surface and the lever held partly vertical until the lead meets the work surface, when depressing the lever end will force the lead against the work. The lever end must be quickly moved laterally, so that the lead will approach and then recede from the work centre; this is necessary for two reasons. First, to prevent the emery from cutting rings in the work surface, and secondly, to prevent the formation of grooves behind any hollow spots or specks the work may contain. The reason of the formation of these grooves is that the emery lodges in them and works out from the contact of the lead, so that if on working out they move always in the same line they cut grooves.

When a lathe is provided with belt motion to run both ways, it is an excellent plan to apply the lead with the lathe running forward and then with it running backward.

When by this means the scraper marks are removed, the next object is to let the marks left by the lead be as fine and smooth as possible, for which purpose flour emery should be used; but towards the last no emery, but oil only, should be applied, the lead being kept in constant lateral motion, first quickly and then slowly, so that the marks on the work cross and recross it at different angles.

For round or hollow corners the lead need not be pivoted to the stick, but should be spherical at the end, the marks being made to cross by partly rotating the lever first in one direction and then in the other.

Sometimes the end of the lever is used without the addition of lead, but this does not produce so flat a surface, as it cuts out hollows in the pores of the metal.

For polishing to be done entirely in the lathe, emery paper and crocus may follow the lead, being used dry and kept also in constant lateral motion. Each successive grade of emery paper must entirely remove all marks existing on the work at the time of its (the paper's) first application, and, furthermore, each successive grade should be continued until it is well worn, because of two pieces of emery paper of the same grade that most worn will cut the smoothest and polish the best. For the final polishing a piece of the finest emery paper should be prepared in the manner hereafter described for polishing plain cylindrical surfaces.

The radial faces of wrought iron must be finished as smoothly and true as possible, because being harder than cast iron the emery acts less rapidly upon it. For radial faces on brass the surfaces should be finished as smooth as possible with the slide rest tool, which should be round nosed, with the round flattened somewhat where the tool cuts, and the tool should not, under any condition, have any rake on its top face, while the feed should be fine as, say, 32 revolutions per inch of tool travel. Under skillful manipulation scraping may then be dispensed with, although it may be used to a slight extent without impairing the truth.

Very small radial surfaces of brass may best be finished by the scraper and polished with emery paper, while large ones may be finished with dry emery paper.

Round corners on brass work should be finished with a spring tool, such as shown in Fig. 974, but having negative top rake; but if the corners are of small radius a well oilstoned hand-scraper is best.

To enable the smooth and true turning of all radial faces of large diameter, the lathe head should, when it is possible, be steadied for end motion by placing a rod between the lathe centres, but if the radial face is solid at the centre so that such a rod cannot be put in, the end motion adjusting device of the lathe should be adjusted. The slides of the lathe should also be set up to have good firm contact, and the tool should be brought up to the work by putting the feed motion in gear and operating it by hand at the cone pulley, or gear-wheel on the feed spindle. If the lathe has no compound rest, the cut should be put on by this means, but otherwise the tool may be brought near the work by the feed motion and the cut put on by the compound rest, the object in both cases being to take up all lost motion and hold the rest firmly or steadily on the lathe shears, so that it shall not move back as the cut proceeds.

Work of cast iron or brass and of small dimensions and irregular or curved outline should be finished with scraping tools, such as shown in Figs. 1303 and 1310, polished with emery cloth or paper. But whenever scrapers are made with curves to suit the form of the work, such tool curves should be so formed (for all metals) as not to cut along the whole length of cutting edge at once, unless the curve be of very small length as, say, $\frac{1}{4}$ inch. This is necessary, because if the cutting edge operates on too great a length it will jar or chatter.

For convex surfaces the curve on the scraper should be of greater radius than that of the work, while in the case of concave curves the tool should have a less radius. In both cases the tool will require a lateral movement to cause it to operate over the full width of work curve.

If the work curves are sufficiently large, and the same is sufficiently rigid that a slide rest tool may be used, the length of cutting edge may be increased, so that under very favorable conditions of rigidity the tool edge may cut along its whole length without inducing either jarring or chattering, but the best results will always be obtained when with a broad cutting edge the tool is of the spring tool form shown in Fig. 974.

Work of wrought iron or steel of small dimensions and of irregular form, must also be finished by hand tools, such as the graver shown in Figs. 1285 and 1286, and the finishing tool shown in Figs. 1289 and 1292, the shape of the tool varying to suit the shape of the work.

Round corners or sweeps cannot on any kind of work be finished by a file, because the latter is apt to pin and cut scratches in the work.

For the final tool finishing of lathe work of plain cylindrical outline, no tool equals the flat file if it be used under proper conditions, which are, that the work be turned true and smooth with slide rest tools, the marks left by these tools being exceedingly shallow and smooth.

A dead smooth file that has been used enough to wear down the projecting teeth (which would cut scratches) should then be used, the work rotating at as fast a speed as the file teeth will stand without undue wear. The file strokes should be made under a light pressure, which will prevent the cuttings from clogging its teeth, and the cuttings should be cleaned from the file after every few strokes. Under these conditions work of moderate diameter may be turned to the greatest degree of smoothness and truth attainable with steel cutting tools, providing that the work makes several revolutions during each file stroke, and it therefore follows that the file strokes may be more rapid as the diameter of the work decreases, and should be more slow as that diameter increases. Allowing

the greatest speed of the filed surface permissible, without too rapid destruction of the file teeth, to be 200 feet per minute, and the slowest speed of file stroke that will prevent the file teeth from being ground away or from becoming pinned (when used on wrought iron) to be one stroke in two seconds, the greatest diameter of work that can be finished by filing under the condition that the work must make more than one rotation per file stroke, is about 25 inches in diameter, running about 30 revolutions per minute. The same diameter and speed may be also taken for cast iron, but brass may be filed under increased speed, rendering it practicable to file it up to a diameter of about 30 inches under the above conditions of work rotation and file stroke speed.

Supposing, however, that from hardness of the metal or from its increased diameter the work cannot make a rotation per file stroke unless that stroke be more slowly performed, then the cuttings gather in the teeth of the file, become locked and form projections, termed pins, above the file teeth, and these projections cut scratches in the work, and this it is that renders it impracticable to hold the file still while the work rotates. But suppose the file be applied to work of such a diameter that, with a stroke in two seconds and the work surface rotating at 200 feet per minute, each stroke acts on a fraction of the circumference only, then there can be no assurance that the filed surface will be cylindrical, because there is no means of applying the file equally over the whole surface. But it is to be noted, nevertheless, that the file acts with greater effect in proportion as the area filed is decreased, and that as the tool marks are filed out the area of surface operated upon is increased. Suppose, then, that starting from any point on the work circumference a file stroke be taken, and that it extends around one-third of the circumference, that the second file stroke extends around one-third also, but that there is an unfiled space of, say, two inches between the area of surface filed by these two strokes, and that at the third file stroke the file starts on the surface filed at the first stroke, passes over the two inches previously unfiled and terminates on the surface filed by the second stroke; then the conditions will be as follows:—

Part of the surface filed at the first stroke will have been filed twice, part of the surface filed at the second stroke will also have been filed twice, while the two inches will have been filed once only. But this latter part will have had much more taken off it during the third stroke than did the rest of the surface filed at that stroke, because it operated on the ridges or tool marks where, being unfiled, their area in contact with the file teeth was at a minimum. This condition will prevail until the tool marks are effaced, and tends to preserve the truth of the work up to that point, hence the necessity of leaving very fine tool marks becomes obvious.

Apart from these considerations, however, there is the fact that filing work in the lathe is a very slow operation, and therefore inapplicable to large work; and furthermore, on large work the surface is not needed to be so smooth as in small work: for example, tool feed marks $\frac{1}{1000}$ inch deep would upon work of $\frac{1}{2}$ inch diameter leave a surface appearing very uneven, and the wearing away of those ridges or marks would destroy the fit of the piece; but in a piece, say, six feet in diameter, tool marks of that depth would not appear to much disadvantage, and their wearing away would have but little effect upon the fit of the piece.

Finishing with the file, therefore, is usually applied to work of about 24 inches in diameter, and less, larger work being finished with the cutting tool or by emery grinding, where a greater degree of finish is required.

Small work—as, say, of six inches, or less, in diameter—may be finished with the file so cylindrically true, that no error can be discovered by measurement with measuring tools of the calipering class, though the marks of contact if made apparent by gently forcing the work through a closely fitting ring-gauge may not appear to entirely cover the surface.

To produce filed work thus true, all that is necessary is to set the cutting edge of the finishing tool at the horizontal centre of the work, properly adjust the live spindle of the lathe for fit to its bearings, adjust the slides of the slide rest so that there is no lost motion, and follow the rules already given with reference to the shape of the tool cutting edge, employing a cutting speed not so fast as to dull the tool before it has finished its cut, using a fine feed except in the case of cast iron, as already explained.

The requirement that the tool shall not become dull before it has finished its cut, brings us to the fact that the length of work that can be thus accurately turned is limited, as the diameter of the work increases.

Indeed, the length of the work in proportion to its diameter is a very important element. Thus, it would be very difficult indeed to turn up a spindle of an inch in diameter and, say, 14 feet long, and finish it cylindrically true, parallel, and smooth, because

1st. The slightness of the work would cause it to spring or deflect from the pressure or strain due to the cut. This may to some extent be remedied by steadying the work in a follower rest, but the bore of such follower itself wears as the cut proceeds, though the amount may be so small as to be almost inappreciable.

2nd. The work being better supported (by the lathe centres) at the two ends than in the middle of its length, the duty placed on the follower rest will increase as the middle of the work length is approached, hence the spring or deflection of the follower rest will be a disturbing element.

3rd. The tool gets duller as the cut proceeds, causing more strain from the cut, and, therefore, placing more strain on the follower rest; and,

4th. It would be necessary, on account of the length of the cut, to resharpen the tool before the cut was carried from end to end of the spindle, and it would be almost impracticable to set the reground tool to cut to the exact diameter.

The second, third, and fourth of the above reasons operate together in causing increased work spring as the tool approaches the middle of the work length; thus the deflection of the follower rest, the increased weakness of the work, and the comparative dullness of the tool would all operate to cause the work to gradually increase in diameter as the cut proceeded towards the work centre (or length).

Suppose, for example, a cut to have been carried from the dead centre, say, five feet along the work; at the end of this five feet the tool will be at its dullest, the shaft at its weakest, and supported the least from the dead centre and follower rest.

Suppose, then, that the reground tool be placed in the rest again and set to just meet the turned surface without cutting it, then when it meets the cut to carry it farther along the work the cut will produce (on account of the tool being sharper) less strain on the work, which will therefore spring or deflect less. Precisely what effect this may have upon the diameter to which the tool will turn the work will depend upon various conditions: thus, if the top face of the tool be sufficiently keen to cause the strain due to bending the shaving cut or chip to pull the work forward, the tool would turn to a smaller diameter. If the depth of the cut be sufficient to cause the work to endeavor to lift, and the tool edge be above the centre of the work, it would be cut to smaller diameter. If the tool cutting edge were below the centre, or if its top face be at an angle tending to force the work away from the tool point, the diameter of the work would be increased.

From these considerations it is obvious that the finishing cut should be started at the centre of the work length, and carried towards the lathe centres, because in this case the tool will be sharpest, and therefore will produce less tensional strain on the work at the point where the latter is the weakest, while the resisting strength of the work would increase as the cut proceeded, and the tool became dull from use. Furthermore, if it were necessary to regrind the tool, it would be reset nearer to the lathe centres, where the work would be more rigidly held; hence the tool could be more accurately set to the diameter of the finishing cut.

By following this plan, however, it becomes necessary to have the shaft as near true and parallel as possible before taking the finishing cut, for the following reasons:—

Let the diameter of the spindle before the finishing cut be $\frac{999}{1000}$ inches, leaving $\frac{1}{1000}$ inch to be taken off at the finishing cut, then the ring in the follower rest must be at starting that cut $\frac{999}{1000}$ inch bore, and if the rest is to follow the cut the bush must be changed

(so soon as it meets the finishing cut) to one of an inch bore. But if the spindle be turned as true and parallel as possible before the finishing cut the rest may lead the tool, in which case the bush need not be changed. There are differences of opinion as to the desirability of either changing the bush or letting the tool follow the rest, but there can be no dispute that (from the considerations already given) a spindle turned as true and parallel as may be with the tool started from the dead centre and carried forward can be improved by carrying yet another cut from the middle towards the dead centre. In any event, however, work liable to spring or too long to be finished at one cut without

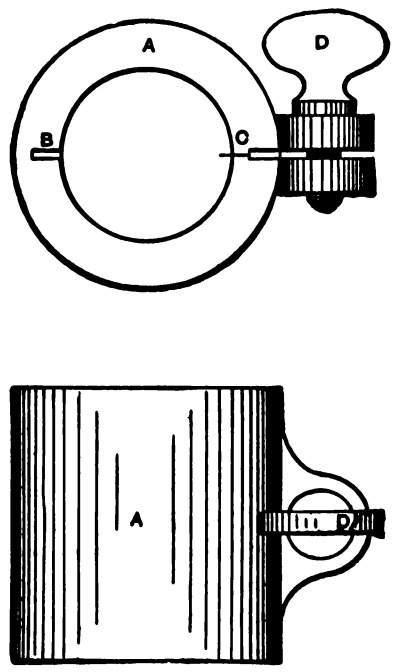

Fig. 1210.

removing the tool to grind it, can be more accurately finished by grinding in a lathe, such as was shown in Figs. 676 or 679, than by steel-cutting tools, and for the following reasons:—

If it be attempted with steel tools to take a very fine cut, as, say, one of sufficient depth to reduce a diameter, say $\frac{1}{500}$ inch, the tool is apt to turn an uneven surface. There appears, indeed, to be a necessity to have the cut produce sufficient strain to bring the bearing surfaces of the rest into close contact and to place a slight strain on the tool, because under very light cuts, such as named above, the tool will generally momentarily leave the cut or take a reduced cut, and subsequently an increased one.

It may be accepted that from these causes a finishing cut taken with a steel tool should not be less than that sufficient to reduce the diameter of the work $\frac{1}{64}$ inch. Now an emery-wheel will take a cut whose fineness is simply limited by the wear of the wheel in the length of the cut. Some experiments made by Messrs. J. Morton Poole and Sons, of Wilmington, Delaware, upon this subject led to the conclusion that with corundum wheels of the best quality the cut could be made so fine that a 12-inch wheel used upon a piece of work (a calender roll) 16 inches in diameter and 6 feet long, would require about forty thousand traverses to reduce the diameter of the work an inch, leading to the conclusion that the wear of the wheel diameter was less than one eighty-thousandth part of an inch per traverse.

Now the strain placed upon the work of an emery-wheel taking a cut of, say, $\frac{1}{1000}$ inch, is infinitely less than that caused by a cutting tool taking a cut of $\frac{1}{120}$ inch in diameter; hence the accuracy of grinding consists as much in the small amount of strain and, therefore, of deflection it places upon the work, as upon the endurance of the wheel itself.

Since both in finishing and in polishing a piece of work the object is to obtain as true and smooth a surface as possible, the processes are to a certain extent similar, but there is this difference between the two: where polishing alone is to be done, the truth of the work or refined truth in its cylindrical form or parallelism may be made subservient to the convenience of polish. Thus, in the case of the stem of the connecting rod that has been turned and filed and finished as true as possible, the polishing processes may be continued with emery-cloth, &c., producing the finest of polish without impairing the quality of the work, whereas the degree of error in straightness or parallelism induced by the polishing may impair the degree of truth desirable for a piston rod.

The degree of finish or polish for any piece of work is, therefore, governed to some extent by the nature of its use. Thus a piston rod may be finished and polished to the maximum degree consistent with maintaining its parallelism and truth, while a connecting rod stem may be polished to any required attainable degree.

In finishing for truth, as in the case of journal bearings, the work, being turned as true and smooth as possible, may be filed with the finest of cut files, and polished with a fine grade of emery-cloth or paper; the amount of metal removed by filing and polishing being so small as not to impair to any practically important degree the truth of the work: a journal so finished will be as true as it is possible to make it without the use of a grinding lathe.

Instead of using emery-paper, grain emery and oil may be used, but the work will not be so true, because in this case much more metal will be removed from the work in the finishing or polishing process.

When it is required to polish and to keep the work as true and parallel as possible, these ends may be simultaneously obtained by means of clamps, such as shown in Fig. 1210, which represents a form of grinding and polishing clamp used by the Pratt and Whitney Company for grinding their standard cylindrical gauges. A cast-iron cylindrical body A is split partly through at B and entirely through at C, being closed by the screw D to take up the wear. The split B not only weakens the body A and enables its easy closure, but it affords ingress to the grinding material. It may be noted that cast iron is the best metal that can be used for this purpose, not only on account of the dead smooth surface it will take, but also because its porosity enables it to carry the oil better than a closer grained metal. For work of larger diameter, as, say, 2 or 3 inches, the form of lap shown in Fig. 1211 is used for external grinding, there being a hinge B C instead of a split, and handles are added to permit the holding and moving of the lap. The bore of this clamp is sometimes recessed and filled with lead. It is then reamed out to fit the work and used with emery and oil, the lathe running at about 300 feet per minute.

For grinding and polishing the bores of pieces, many different forms of expanding grinding mandrels have been devised, in most of which the mandrel has been given a slight degree of curvature in its length; or in other words, the diameter is slightly increased as the middle of the mandrel length is approached from either end. But with this curvature of outline, as small as it may be, it rather

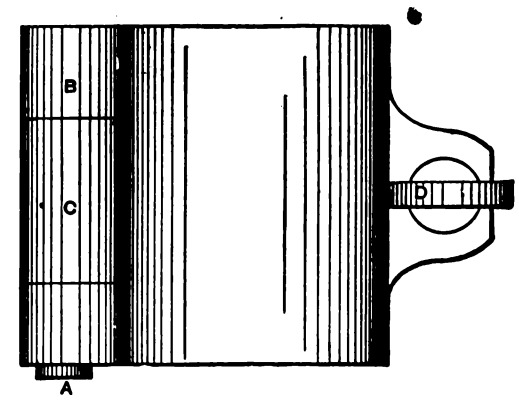

Fig. 1211.

increases the difficulty of grinding a bore parallel instead of diminishing it. When expanding mandrels are caused to expand by a wedge acting upon split sections of the mandrel, they rarely expand evenly and do not maintain a true cylindrical form.

Fig. 1212 represents a superior form of expanding mandrel for this purpose. The length A is taper and contains a flute C. The lead is cast on and turned upon the mandrel, the metal in the flute C driving the lead. The diameter of the lap is increased by driving the taper mandrel through it, and the lead is therefore maintained cylindrically true.

While these appliances are supplied with the flour emery and oil, their action is to grind rather than to polish, but as they are used without the addition of emery, the action becomes more a polishing one.

Fig. 1213 represents at A A a wooden clamp for rough polishing with emery and oil. It consists of two arms hinged by leather at B and having circular recesses, as C, D, to receive the work. At J J is represented a similar grinding and polishing clamp for more accurate work. G and H are screws passing through the top arm and threaded into the lower, while E, F are threaded into the lower arm, and abut at their ends against the face of the upper arm. It is obvious that by means of these screws the clamp may be set to size, adjusted to give the required degree of pressure, and held firmly together. Lead bushes may be inserted in the bores as grinding laps. As this clamp is used by hand,

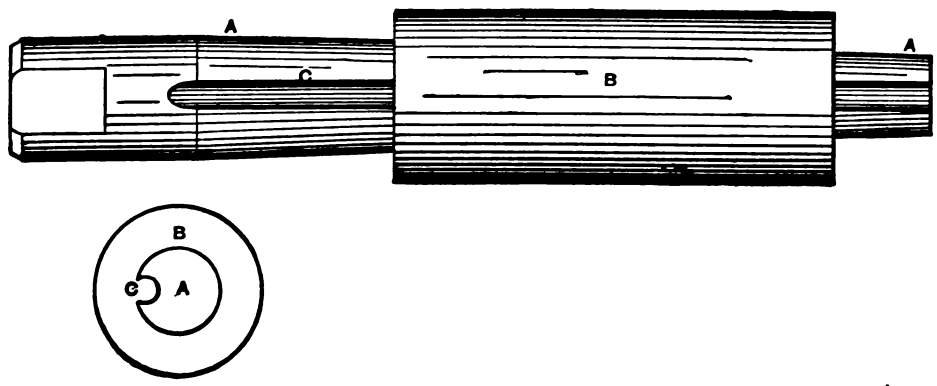

Fig. 1212.

it must be moved along the work at an exactly even speed of traverse, or else it will operate on the work for a longer period of time at some parts than at others; hence the greatest care is necessary in its use.

The best method of polishing cylindrical work to be operated on entirely in the lathe, the primary object being the polish, is by means of emery paper, and as follows :—

In all polishing the lathe should run at a fast speed; hence special high speeded lathes, termed speed lathes, are provided for polishing purposes only.

The emery paper or cloth should be of a fine grade, which is all that is necessary if the work has been properly filed, if cylindrical, and scraped if radial or of curved outline.

In determining whether emery paper or cloth should be used, the following is pertinent :—

The same grade of emery cuts more freely on cloth than on paper, because the surface of the cloth is more uneven; hence the emery grains project in places, causing them to cut more freely until worn down. If, then, the surface is narrow, so that there is no opportunity to move the emery cloth endways on the work, emery paper should be used. It should be wrapped closely (with not more than one, or at least two folds) around a *smooth* file, and not a coarse one, whose teeth would press the emery to the work at the points of its coarse teeth only. The file should be given short, rapid, light strokes.

For work of curved outline emery cloth should be used, because it will bend without cracking, and the cloth should be moved quickly backwards and forwards across, and not round, the curve; and when the work is long enough to permit it, the emery paper or cloth should be moved rapidly backwards and forwards along the work so that its marks cross and recross at an obtuse angle.

Now, suppose the grade of emery paper first used to be flour emery, and the final polish is to be of the highest order, then oooo French emery paper will be required to finish, and it is to be observed that nothing will polish a metal so exquisitely as an impalpable powder of the metal itself: hence. while performing the earlier stages of polishing, it is well to prepare the final finishing piece, so as to give it a glaze of metal from the work surface.

When, therefore, all the file marks are removed by the use of the flour emery cloth, the surface of the work should be slightly oiled and then wiped, so as not to appear oily and yet not quite dry, with a piece of rag or waste, then the piece of oooo emery paper, or, what is equally as good, a piece of crocus cloth, to be used for the final finishing should be applied to the work, and the slightly oily surface will cause the cuttings to clog and fill the crocus cloth. The cloth should be frequently changed in position so as to bring all parts of its surface in contact with the work and wear down all projections on the cloth as well as filling it with fine cuttings from the work. Then a finer grade, as, say, No. o French emery paper, must be used, moving it rapidly endwise of the work, as before, and using it until all the marks left by the flour emery have been removed.

One, or at most two drops of lard oil should then be put on the work, and spread over as far as it will extend with the palm of the hand, when the finishing crocus may again be applied and reversed as before in every direction; oo emery paper may then be used until all the marks of the o are removed, and with the work left quite dry the crocus for final finishing may again be applied; ooo emery paper may then be used to efface all the marks left by the oo. This ooo emery paper should be used until it is very much worn, the final finish being laid with the glazed crocus.

If this crocus has been properly prepared, its whole surface will be covered with a film of fine particles of metal, so that if the metal be brass the crocus surface will appear like gold leaf. If cast iron, the crocus surface will appear as though polished with plumbago or blacklead, while in any case the crocus surface will be polished and quite dry. The crocus should be pressed lightly to the work, so that its polishing marks will not be visible to the naked eye.

If emery paper be applied to work finished to exact diameter it should be borne in mind that the process reduces to some extent the size of the work, and that the amount under proper conditions though small is yet of importance, where preciseness of diameter is a requisite.

In the practice, however, of some of the best machine shops of the United States, the lathe alone is not relied upon to produce the best of polish. Thus, in the engine works of Charles H. Brown, of Fitchburg, Massachusetts, whose engines are unsurpassed for finish and polish, and which the majority of mechanics would suppose were finely silver plated, the following is the process adopted for polishing connecting rods.

The rod is carefully tool-finished with a fine feed. The tool marks are then erased with a fine smooth file, and these file marks by a dead-smooth file, the work rotating at a quick speed, little metal being left, so as to file as little as possible. Next comes *fine* emery cloth to smooth down and remove the file marks. The lathe is then stopped and the rod stoned lengthwise with Hindostan stone and benzine, removing all streaks. The Scotch stone used with water follows, until the surface is without scratches or marks, as near perfect as possible. The next process is, for the

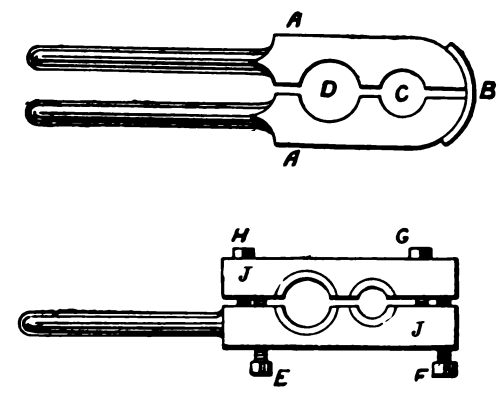

Fig. 1213.

finest work, the burnisher used by hand. But if not quite so exquisite a polish is required, the rod is finished by the use of three grades of emery cloth, the last being very fine.

Sometimes, however, the streaks made by polishing with emery paper used before the application of the stones are too difficult to remove by them. In this case, for a very fine finish, the lathe is stopped and draw-filing with the finest of files is performed, removing all streaks; and the stones then follow the draw-filing. All stoning is done by hand with the work at rest, as is also all burnishing.

After the burnisher comes fine imported crocus cloth, well worn, which makes the surface more even and dead than that left by the burnisher. The crocus is used with the lathe at its quickest speed, and is moved as slowly and as evenly as possible, the

slower and more even the crocus movement along the rod, the more even the finish. If the rod has filleted corners, such corners are in all cases draw-filed before the stoning.

The method of polishing a cylinder cover at the Brown Engine Works is as follows.

The finishing cut is taken with a feed of 32 lathe-revolutions per inch of tool traverse, and at as quick a cutting speed as the hardness of the iron will permit. This is necessary in order to have the tool-edge cut the metal without breaking it out as a coarse one would do. With the fine feed and quick speed the

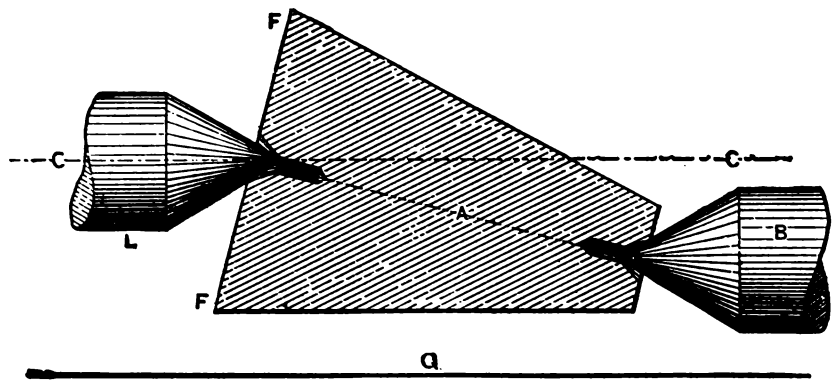

Fig. 1214.

pores of the iron do not show; with a coarse feed the pores show very plainly and are exposed for quite a depth.

After the lathe-tool comes a well oil-stoned hand-scraper, with a piece of leather between it and the tool rest to prevent the scraper from chattering. The scraper not only smoothes the surface, but it cuts without opening the pores. It is used at a quick speed, as quick indeed as it will stand, which varies with the hardness of the metal, but is always greater than is possible with a slide-rest tool.

After the scraper the cover is removed from the lathe, and all flat surfaces are filed as level as possible with a second-cut file, and then stoned with soft Hindostan stone, used with benzine or turpentine, so as to wash away the cuttings and prevent them from clogging the stone or forming scratches. In using all stones the direction of motion is frequently reversed so as to level the surface. Next comes stoning with Scotch stone (Water of Ayr), used with water; in this part of the operation great care must be taken, otherwise the cuttings will induce scratches. When the Scotch stone marks have removed all those left by the Hindostan stone, and left the surface as smooth as possible, the cover is again put in the lathe and the grain is laid and finished with very fine emery cloth and oil. The emery cloth is pressed lightly to the work and allowed to become well worn so as to obtain a fine lustre without leaving any streaks.

It will be noticed here that the use of the emery stick and oil is entirely dispensed with; but for a less fine polish it may be used,

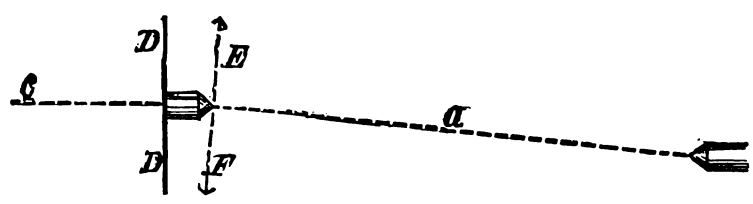

Fig. 1215.

providing it be kept in quick motion radially on the work. The objection to its use is that if there be any speck on the work it is apt to cut a streak or groove following the spot like a comet's tail.

TURNING TAPERS.—There are five methods of turning outside tapers; 1st, by setting over the tailstock of the lathe; 2nd, by the use of a former or taper turning attachment such as was shown in Fig. 508; 3rd, by the use of a compound slide rest; 4th, by means of a lathe in which the head and tailstock are upon a bed that can be set at an angle to the lathe shears on which the lathe carriage slides; and 5th, by causing the cross-feed screw to operate simultaneously with the feed traverse.

Referring to the first method, it is objectionable, inasmuch as that the work axis is thrown at an angle to the axis of the lathe centres, which causes the work centres to wear rapidly, and this often induces them to move their positions and throw the work out of true. Furthermore, the tailstock has to be moved back in line with the live spindle axis for turning parallel again, and this is a troublesome matter, especially when the work is long.

Fig. 1214 shows the manner in which the lathe centres and the work centres have contact, L being the live and B the dead centre; hence C C is the axis of the live spindle which is parallel to the lathe shear slides, which are represented by G; obviously A is the work axis. The wear is greatest at the dead centre end of the work, but there is some wear at the live centre end, because there is at that end also a certain amount of motion of the work centre upon the live centre. Thus, in Fig. 1215, let *c* represent the live centre axis, *a* the work axis, D the lathe face plate, and E F the plane of the driver or dog upon the work, and it is obvious that the tail of the driver will when at one part of the lathe revolution stand at E, while when diametrically opposite it will stand at F; hence, during each work revolution the driver moves, first towards and then away from the face plate D, and care must be taken in adjusting the

Fig. 1216.

position of the driver to see that it has liberty to move in this direction, for if obstructed in its motion it will spring or bend the work.

To determine how much the tailstock of a lathe must be set over to turn a given taper, the construction shown in Fig. 1216 may be employed. Draw the outline of the work and mark its axis D, draw line C parallel to one side of the taper end, and the distance A between this line and the work axis is the amount the tailstock requires to be set over. This construction is proved in Fig. 1217, in which the piece of work is shown set over, C representing the line of the lathe ways, with which the side F of the taper must be parallel. D is the line of the live spindle, and E that of the work, and the distance B will be found the same as distance A in Fig. 1216.

It may be remarked, however, that in setting the tailstock over it is the point of the dead centre when set adjusted to the work length that must be measured, and not the tailblock itself.

Other methods of setting tailstocks for taper turning are as follows: If a new piece is to be made from an old one, or a

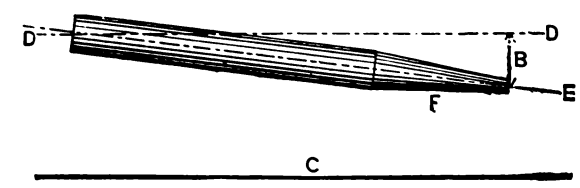

Fig. 1217.

duplicate of a piece of work is to be turned, the one already turned, or the old piece as the case may be, may be put in the lathe and we may put a tool in the tool post and set the tailstock over until the tool traversed along the work (the latter remaining stationary) will touch the taper surface from end to end.

If, however, the taper is given as so much per foot, the distance to set the tailstock over can be readily calculated.

Thus, suppose a piece of work has a taper part, having a taper of an inch per foot, the work being three feet long, then there would be three inches of taper in the whole length of the piece and the tailstock requires to be set over one-half of the three inches, or $1\frac{1}{2}$ inches. It will not matter how long the taper part of the work is, nor in what part of the work it is, the rule will be found correct so long as the tailstock is set over one-half the amount obtained by multiplying the full length of the work per foot by the amount of taper per foot.

If we have no pattern we may turn at each end of the part that is to be taper a short parallel place, truing it up and leaving it larger to the same amount at each end than the finished size, and taking care that the parallel part at the small end will all turn out in the finishing. We then fasten a tool in the lathe tool post,

place it so that it will clear the metal of the part requiring to be turned taper, and placing it at one extreme end of said part, we take a wedge, or a piece of metal sufficiently thick, and place it to just contact with the turned part of the work and the tool point (adjusting the tool with the cross-feed screw), we then wind the rest to the other end of the required taper part, and inserting same wedge or piece of iron, gauge the distance from the tool point to the work, it being obvious that when the tool point wound along is found to stand at an equal distance from each end of the turned part, the lathe is set to the requisite taper.

Figs. 1218 and 1219 illustrate this method of setting. A represents a piece of work requiring to be turned taper from B to C, and turned down to within $\frac{1}{32}$ inch of the required size at E and F. If then we place the tool point H first at one end and then at the other, and insert the piece I and adjust the lathe so that the piece of metal I will just fit between the tool point and the work

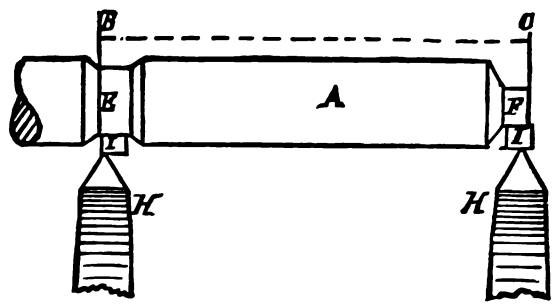

Fig. 1218.

at each extreme end of the required taper part, the lathe will be set to the requisite taper as near as practicable without trying the work to the taper hole. The parallel part at the small end of the work should be turned as true as possible, or the marks may not be obliterated in finishing the work.

Fig. 1220 (from *The American Machinist*) represents a gauge for setting the tailstock over for a taper. A groove is cut as at E and D, these diameters corresponding to the required taper; a holder A is then put in the tool point, and to this holder is pivoted the gauge B. The tailstock is set over until the point of B will just touch the bottom of the groove at each end of the work.

To try a taper into its place, we either make a chalked stripe along it from end to end, smoothing the chalked surface with the finger, or else apply red marking to it, and then while pressing it firmly into its place, revolve it backwards and forwards, holding it the while firmly to its seat in the hole; we move the longest outwardly projecting end up and down and sideways, carefully noting at which end of the taper there is the most movement. The amount of such movement will denote how far the taper is from fitting the hole, while the end having the least movement will

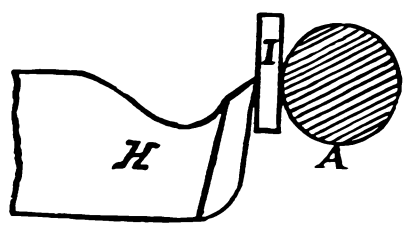

Fig. 1219.

require to have the most taken off it, because the fulcrum off which the movement takes place is the highest part, and hence requires the greatest amount of metal to be taken off.

Having fitted a taper as nearly as possible with the lathe tool, that is to say, so nearly that we cannot find any movement or unequal movement at the ends of the taper (for there is sure to be movement if the tapers do not agree, or if the surfaces do not touch at more than one part of their lengths), we must finish it with a fine smooth file as follows: After marking the inside of the hole with a very light coat of red marking, taking care that there is no dirt or grit in it, we press the taper into the hole firmly, forcing it to its seat while revolving it backwards and forwards.

By advancing it gradually on the forward stroke, the movement will be a reciprocating and yet a revolving one. The work must then be run in the lathe at a high speed, and a smooth file used to ease off the mark visible on the taper, applying the file the most to parts or marks having the darkest appearance, since the darker the marks the harder the bearing has been. Too much care in trying the taper to its hole cannot be taken, because it is apt to mark itself in the hole as though it were a correct fit when at the same time it is not; it is necessary therefore at each insertion to minutely examine the fit by the lateral and vertical movement of projecting part of the taper, as before directed.

A taper or cone should be fitted to great exactitude before it is attempted to grind it, the latter process being merely intended to make the surfaces even.

For wrought-iron, cast-iron, or steel work, oil and emery may be used as the grinding materials (for brass, burnt sand and water are the best). The oil and emery should be spread evenly with the finger over the surfaces of the hole and the taper; the latter should then be placed carefully in its place and pressed firmly to its seat while it is being revolved backwards and forwards, and slowly rotated forward by moving it farther during the forward than during the backward movement of the reciprocating motion.

After about every dozen strokes the taper should be carefully removed from the hole and the emery again spread evenly over the surfaces with the finger, and at and during about every fourth one of the back strokes of the reciprocating movement the taper should be slightly lifted from its bed in the hole, being pressed lightly home again on the return stroke, which procedure acts to spread the grinding material and to make the grinding smooth and even. The emery used should be about number 60 to 70 for large work, about 80 to 100 for small, and flour emery for very fine work.

Any attempt to grind work by revolving it steady in one direction will cause it to cut rings and destroy the surface.

Referring to the second method, all that is necessary in setting

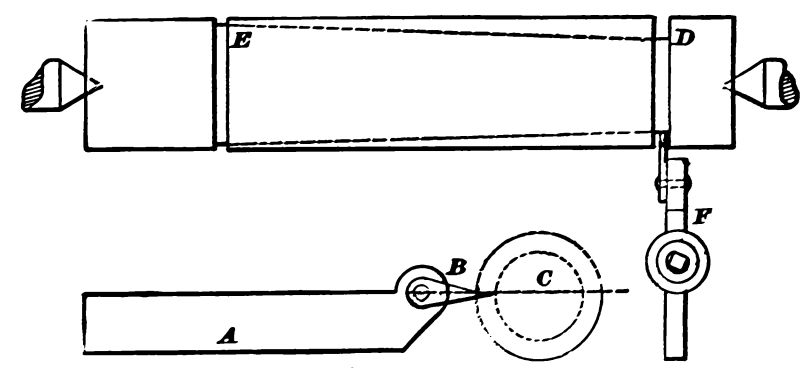

Fig. 1220.

a former or taper attachment bar is to set it out of line with the lathe shears to half the amount of taper that is to be turned, the bar being measured along a length equal to that of the work. Turning tapers with a bar or taper-turning attachment possesses the advantage that the tailstock not being set over, the work centres are not thrown out of line with the live centres, and the latter are not subject to the wear explained with reference to Fig. 1214. Furthermore, the tailstock being kept set to turn parallel, the operator may readily change from turning taper to turning parallel, and may, therefore, rough out all parts before finishing any of them, and thus keep the work more true, whereas in turning tapers by setting the tailstock over we are confronted by the following considerations:—

If we turn up and finish the plain part first, the removing of the skin and the wear of the centres during the operation of turning the taper part will cause the work to run out of true, and hence it will not, when finished, be true; or if, on the other hand, we turn up the taper part first, the same effects will be experienced in afterwards turning the plain part. We may, it is true, first rough out the plain part, then rough out the taper part, and finish first the one and then the other; to do this, however, we shall require to set the lathe twice for the taper and once for the parallel part.

It is found in practice that the work will be more true by turning the taper part the last, because the work will alter less upon the lathe centres when changed from parallel to taper turning than when changed from the latter to the former. In cases, however, in which the parts fitting the taper part require turning, it is better to finish the parallel part last, and to then turn up the work

fastened upon the taper part while it is fast upon its place: thus, in the case of a piston rod and piston, were we to turn up the parallel part of the rod first and the taper last, and the centres altered during the last operation, when the piston head was placed upon the rod, and the latter was placed in the lathe, the plain part or stem would not run true, and we should require to true the centres to make the rod run true before turning up the piston head. If, however, we first rough out the plain part or stem of the rod, and then rough out and finish the taper part, we may then fasten the head to its place on the rod, and turn the two

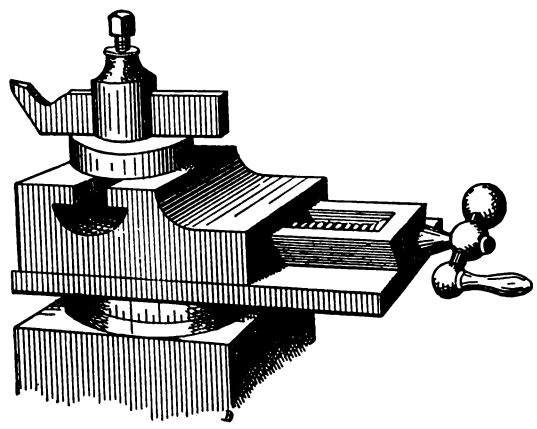

Fig. 1221.

together; that is to say, rough out the piston head and finish its taper hole; then rough out the parallel part of the rod, but finish its taper end. The rod may then be put together and finished at one operation; thus the head will be true with the rod whether the taper is true with the parallel part of the rod or not. With a taper-turning attachment the rod may be finished separately, which is a great advantage.

If, however, one part of the length of a taper turning attachment is much more used than another, it is apt to wear more, which impairs the use of the bar for longer work, as it affects its straightness and causes the slide to be loose in the part most used, and on account of the wear of the sliding block it is proper to wind the tool out from its cut on the back traverse, or otherwise the tool may cut deeper on the back than on the forward traverse, and thus leave a mark on the work surface.

Referring to the third method, a compound slide rest provides

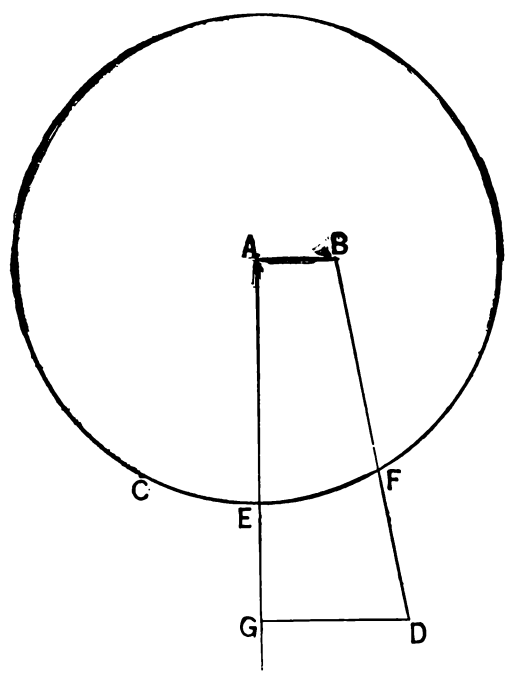

Fig. 1222.

an excellent method of turning tapers whose lengths are within the capacity of the upper slide of the compound rest, because that slide may be used to turn the taper, while the ordinary carriage feed may be used for the parallel parts of the work, and as the tailstock does not require to set over, the work centres are not subject to undue wear.

If the seat for the upper slide of the rest is circular, and the taper is given in degrees of angle, a mark may be made on the seat, and the base of the upper slide may be marked in degrees of a circle, as shown in Fig. 1221, which will facilitate the setting; or the following construction, which is extracted from *Mechanics*, may be employed. Measure the diameter of the slide rest seat, and scribe on a flat surface a circle of corresponding diameter. Mark its centre, as A in Fig. 1222, and mark the line A B. From the centre A mark the point B, whose radius is that of the small end of the hole to be bored. Mark the length of the taper to be turned on the line A G and draw the line G D distant from A B equal to the diameter of the large end of the hole to be bored. Draw the line B D. Then the distance E F is the amount the rest must be swiveled to turn the required taper.

It is obvious that the same method may also be used for setting the rest.

Referring to the fourth method, by having an upper bed or base plate for the head and tailstock, so that the line of lathe centres may be set at the required angle to the Vs or slides on which the

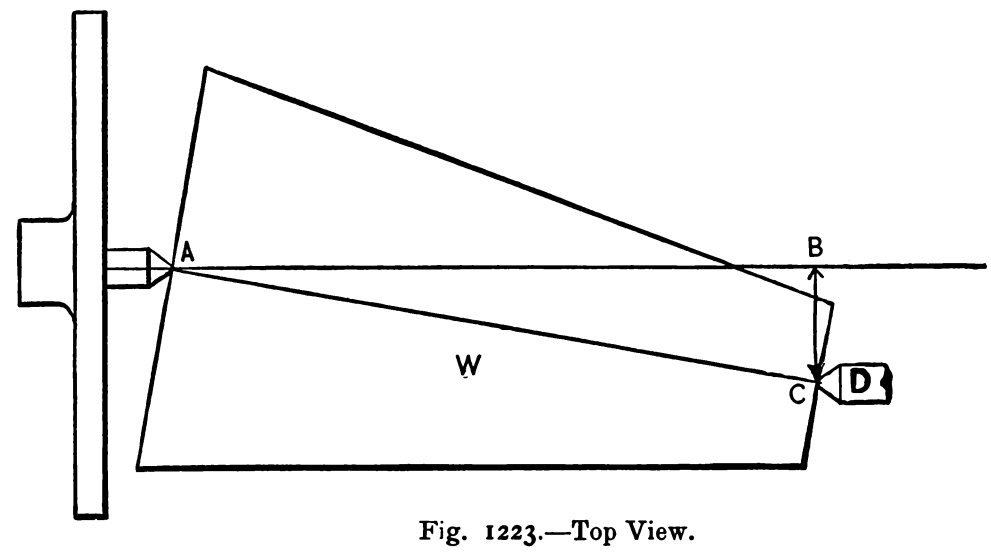

Fig. 1223.—Top View.

carriage traverses, it affords an excellent means of turning tapers, since it avoids the disadvantages mentioned with regard to other systems, while at the same time it enables the turning of tapers of the full length of the carriage traverse, but it is obvious that the head and tailstock are less rigidly supported than when they are bolted direct to the lathe shears.

In turning tapers it is essential that the tool point be set to the exact height of the work axis, or, in other words, level with the line of centres. If this is not the case the taper will have a curved outline along its length. Furthermore, it may be shown that if a straight taper be turned and the tool be afterwards either raised

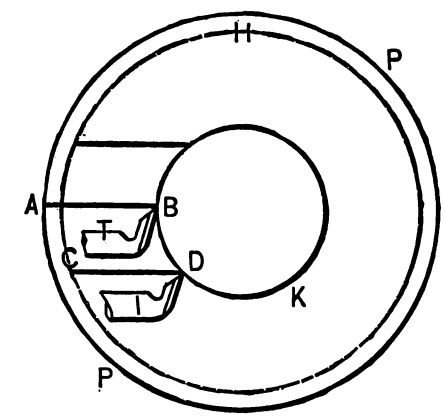

Fig. 1224.—End View.

or lowered, the amount of taper will be diminished as well as the length being turned to a curve.

Figs. 1223 and 1224 demonstrate that the amount of taper will be changed by any alteration in the height of the tool. In Fig. 1223, A B represents the line of centres of the spindle of a lathe, or, in other words, the axis of the work W, when the lathe is set to turn parallel; A C represents the axis of the work or cone when the lathe tailstock is set over to turn the taper or cone; hence the length of the line C B represents the amount the tailstock is set over. Referring now to Fig. 1224, the cone is supposed to stand level, as it will do in the end view, because the lathe centres remain at an equal height from the lathe bed or Vs, notwithstanding that the tailstock is set over. The tool therefore travels at the same height throughout its whole length of feed; hence, if it is set, as at T, level with the line of centres, its line of feed while travelling from

end to end of the cone is shone by the line A B. The length of the line A B is equal to the length of the line B C Fig. 1223. Hence, the line A B, Fig. 1224, represents two things: first, the line of motion of the point of tool T as it feeds along the cone, and second its length represents the amount the work axis is out of parallel with the line of lathe centres. Now, suppose that the tool be lowered to the position shown at I; its line of motion as it feeds will be the line C D, which is equal in length to the line A B. It is obvious, therefore, that though the tool is set to the diameter of the small end, it will turn at the large end a diameter represented by the dotted circle H. The result is precisely the same if the taper is turned by a taper-turning attachment instead of setting the tailstock out of line.

The demonstration is more readily understood when made with

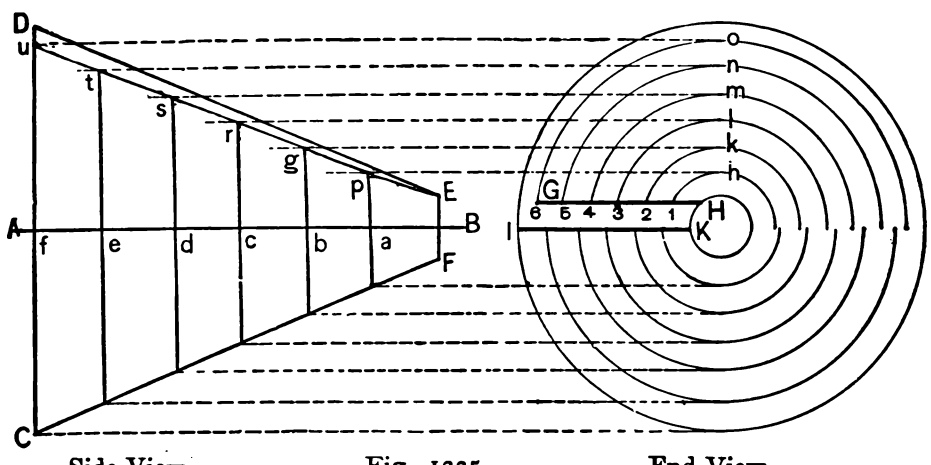

Side View. Fig. 1225. End View.

reference to such an attachment as the one just mentioned, because the line A B represents the line of tool feed along the work, and its length represents the amount the attachment causes the tool to recede from the work axis. Now as this amount depends upon the set-over of the attachment it will be governed by the degree of that set over, and is, therefore, with any given degree, the same whatever the length of the tool travel may be. All that is required, then, to find the result of placing the tool in any particular position, as at I in the end view, is to draw from the tool point a line parallel to A B and equal in length to it, as C D. The two ends of that line will represent in their distances from the work axis the radius the work will be turned to at each end with the tool in that position. Thus, at one end of the line C D is the circle K, representing the diameter the tool I would turn the cone at the small end, while at the other end the dotted circle H gives the diameter at the large end that the tool would turn to when at the end of its traverse. But if the tool be placed as at T, it will turn the same diameter K at the small end, and the diameter of the circle P at the large end.

We have here taken account of the diameters at the ends only of the work, without reference to the result given at any intermediate point along the cone surface, but this we may now proceed to do, in order to prove that a curved instead of a straight taper is produced if the tool be placed either above or below the line of lathe centres.

In Fig. 1225, D E F C represents the complete outline of a straight taper, whose diameter at the ends is represented in the end view by the outer and inner circles. Now, a line from A to B will represent the axis of the work, and also the line of tool point motion or traverse, if that point is set level with the axis. The line I K in the end view corresponds to the line A B in the side view, in so far that it represents the line of tool traverse when the tool point is set level with the line of centres. Now, suppose the tool point to be raised to stand level with the line G H, instead of at I K, and its line of feed traverse be along the line G H, whose length is equal to that of I K. If we divide the length of G H into six equal divisions, as marked from 1 to 6, and also divide the length of the work in the side view into six equal divisions (*a* to *f*), we shall have the length of line G H in the first division in the end view (that is, the length from H to G), representing the same amount or length of tool traverse as from the end B of the cone to the line A in the side view. Now, suppose the tool point has arrived at I; the diameter of work it will turn when in that position is evidently given by the arc or half-circle *h*, which meets the point I on G H. To mark that diameter on the side view, we first draw a horizontal line, as *h p*, just touching the top of *h*; a perpendicular dropped from it cutting the line A B, gives the radius of work transferred from the end view to the side view. When the tool point has arrived at 2 on G H in the end view, its position will be shown in the side view at the line *b*, and the diameter of work it will turn is shown in the end view by the half-circle *k*. To transfer this diameter to the side view we draw the line *k g*, and where it cuts the line *b* in the side view is the radius of the work diameter when the tool has arrived at the point *b* in the side view. Continuing this process, we mark half-circles, as *l*, *m*, *n*, *o*, and the lines *l r*, *m s*, *n t*, *o u*, by means of which we find in the side view the work radius when the tool has arrived at *c*, *d*, *e*, and *f* respectively. All that remains to be done is to draw on the side view a line, as *u* E, that shall pass through the points. This line will represent the outline of the work turned by the tool when its height is that denoted by G H. Now, the line *u* E is shown to be a curve, hence it is proved that with the tool at the height G H a curved, and not a straight, taper will be turned.

It may now be proved that if the tool point is placed level with the line of centres, a straight taper will be turned. Thus its line of traverse will be denoted by A B in the side view and the line I K in the end view; hence we may divide I K into six equal divisions, and A B into six equal divisions (as *a*, *b*, *c*, &c.). From the points of division I K, we may draw half-circles as before, and from these half-circles horizontal lines, and where the lines meet

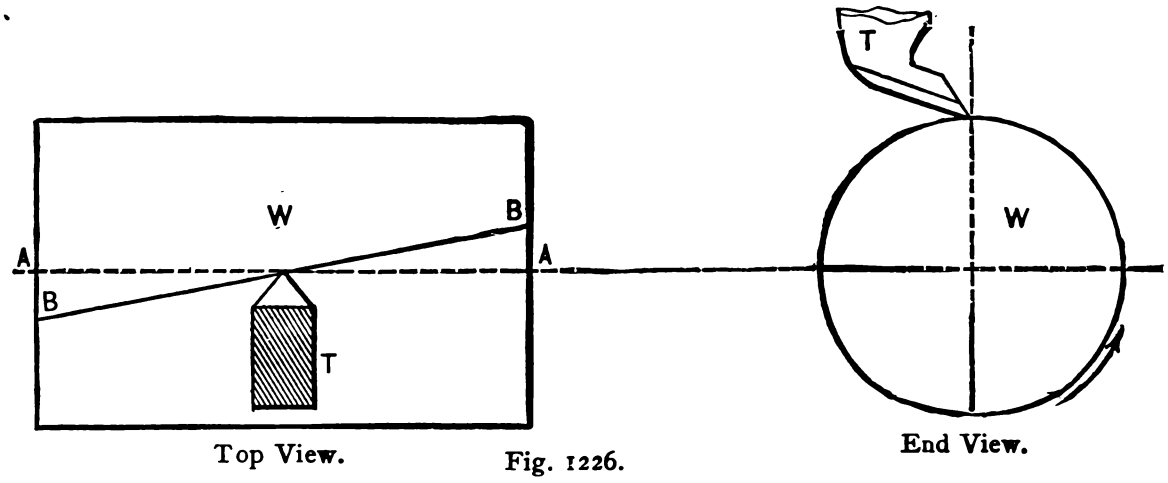

Top View. Fig. 1226. End View.

the lines of division in the side view will be points in the outline of the work, as before. Through these points we draw a line, as before, and this line C F, being straight, it is proven that with the tool point level with the work axis, it will turn a straight taper.

It may now be shown that it is possible to turn a piece of work to a curve of equal curvature on each side of the middle of the work length. Suppose, for example, that the cutting tool stands on top of the work, as in the end view in Fig. 1226, and that while the tool is feeding along the work it also has a certain amount of motion in a direction at right angles to the work axis, so that its line of motion is denoted by the line B B in the top view. The outline of the work turned will be a curve, as is shown in Fig. 1227, in which the line of tool traverse is the line C D. Now the

amount of tool motion that occurs during this traverse in a direction at right angles to the work axis is represented by the line F E, because the upper end is opposite to the upper end of C D, while the lower end is opposite the lower end of C D. We may then divide one-half of the length of F E into the divisions marked from 1 to 6. Now, as we have taken half the length of F E, we must also take half the length of the work and divide it into six equal divisions marked from *a* to *f*. Now, suppose the tool point to stand in the line F S in the end view, its position in the top view

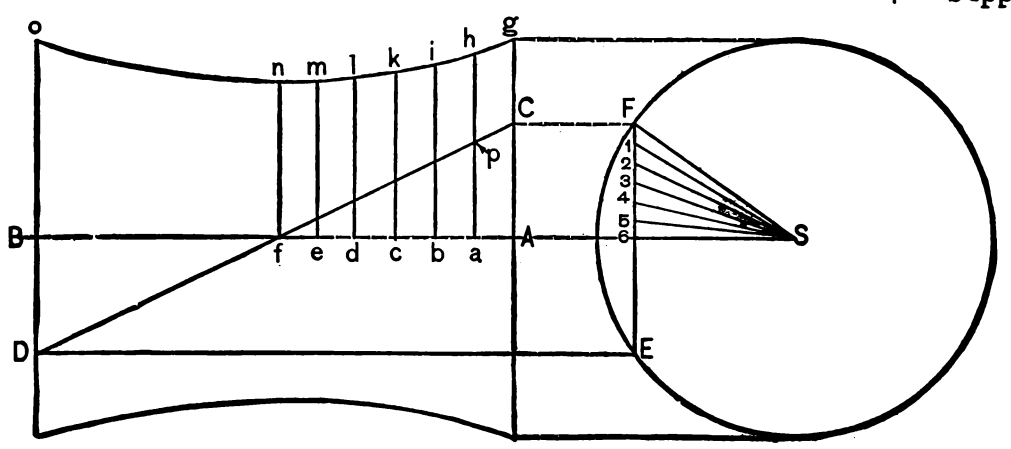

Fig. 1227.

will be at C. When it is at 1 on the end view it will have arrived at *p* in the top view. The radius of work it will then turn is shown in the end view by the length of line running from 1 to the work centre. Take this length, and from *a* in the work axis set it off on the line *a h*, and make the length equal the height of 1 S. In like manner, when the tool point has arrived at 2, the radius it will cut the work is shown by the length of line *i*; hence from 2 on the work axis we may set off the length of 2 S, making 2 S and *b i* of equal length. Continuing this process, we make the length of *c k* equal that of 3 S, the length of *d l* equal 4 S, and so on. All that remains then is to draw a line, *o g*, that shall meet the tops of these lines. This line will show the curve to which that half of the work length will be turned to. The other half of the work length will obviously be turned to the same curvature.

It is obvious that the curvature of the work outline will be determined by the proportion existing between the length of the work and the amount of tool motion in a direction at right angles to the work axis, or, in other words, between the length of the work and that of the line F E. It is evident, also, that with a given amount of tool motion across the work, the curvature of outline turned will be less in proportion as the work length is greater. Now, suppose that the smaller and the larger diameter of the work, together with its length, are given, and it is required to find how much curvature the tool must have, we may find this and

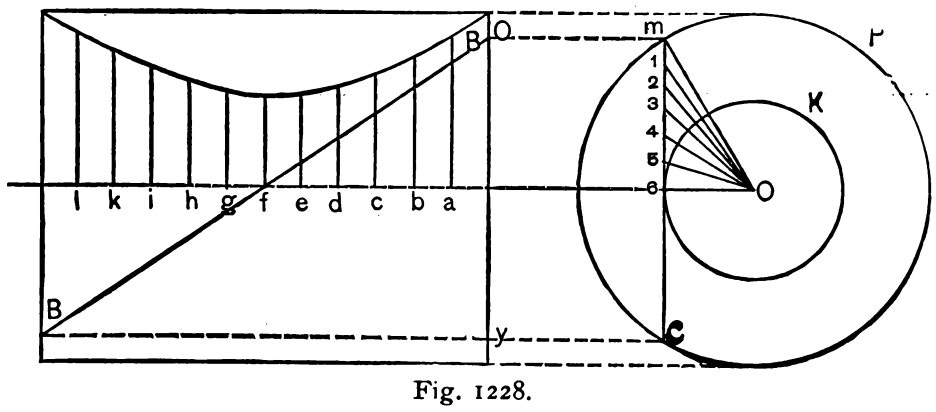

Fig. 1228.

work out the curve it will cut by the construction shown in Fig. 1228, in which the circle K is the smallest and the circle P the largest diameter. The line *m* C is drawn to just touch the perimeter of K, and this at once gives the amount of cross-motion for the tool. Hence, we may draw the line *m* B and C B, and from their extremities draw the line B B representing the path of traverse of the tool point. We may then obtain the full curve on one side of the work by dividing one-half the length of *m* C into six equal divisions and proceeding as before, except that we have here added the lines of division in the second half as from *f* to *l*. It will be observed that the centre of the curve is at the point where the tool point crosses the axis of the work; hence, by giving to the tool more traverse on one side than on the other of the work axis, the location of the smallest point of work diameter may be made to fall on one side of the middle of the work length.

In either turning or boring tapers that are to drive or force in or together, the amount to be allowed for the fit may be ascertained, so that the work may be made correct without driving each piece to its place to try its fit.

Suppose, for example, that the pieces are turned, and the holes are to be reamed, then the first hole reamed may be made to correct diameter by fit and trial, and a collar may be put on the reamer to permit it to enter the holes so far and no farther.

A taper gauge may then be made as in Fig. 1229, the line A representing the bore of the hole, and line B the diameter of the internal piece, the distance between the two being the amount found by trial to be necessary for the forcing or driving. The same gauge obviously serves for testing the taper of the holes reamed.

CHUCKED OR FACE PLATE WORK.—This class of work requires the most skillful manipulation, because the order in which the work may most advantageously proceed and the method of chucking are often matters for mature consideration.

In a piece of work driven between the lathe centres, the truth of any one part may be perceived at any time while operating upon the others, but in chucked work, such is not always the case, and truth in the work is then only to be obtained by holding it truly. Again, the work is apt to be sprung or deflected by the pressure of the devices holding it, and furthermore the removal of the skin or surface will in light work sometimes throw it out of true

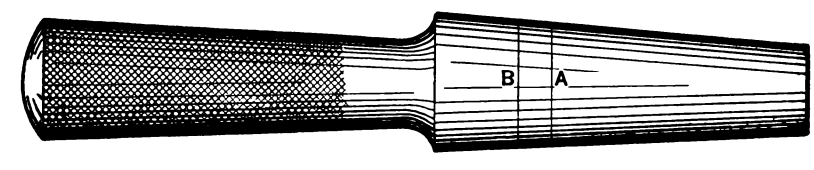

Fig. 1229.

as the work proceeds, the reason being already given, when referring to turning plain cylindrical work.

TO TURN A GLAND.—There are three methods of turning a gland: first, the hole and the face on the outside of the flange may be turned first, the subsequent turning being done on a mandrel; second, the hole only may be bored at the first chucking, all the remaining work being done on a mandrel; and, third, the hole, hub, and one radial face may be turned at one chucking, and the remaining face turned at a separate chucking.

If the first plan be adopted, any error in the truth of the mandrel will throw the hole out of true with the hub, which would be a serious defect, causing the gland to jamb against one side of the piston rod, and also of the gland bore. The same evil is liable to result from the second method; it is best, therefore, to chuck the gland by the hub in a universal chuck, and simply face the outer face of the flange, and also its edge. The gland may then be turned end for end, and the hole, the hub, the inside radial flange face, and the hub radial face, may then all be turned at one chucking; there is but one disadvantage in this method, which is that the gland must be unchucked to try its fit in the gland hole, but if standard gauges are used such trial will not be necessary, while if such is not the case and an error of measurement should occur, the gland may still be put on a mandrel and reduced if necessary.

In either method of chucking, the fit of the hole to the rod it is intended for cannot be tested without removing the gland from the chuck.

TO TURN A PLAIN CYLINDRICAL RING ALL OVER IN A UNIVERSAL CHUCK.—Three methods may be pursued in doing this simple job: first, the hole may be bored at one chucking, and the two radial faces and the circumference turned at a second chucking; second, the diameter may be turned, first on the hole and two radial faces turned at a second chucking; and third the hole and

one radial face may be turned at one chucking, and the diameter and second radial face at a second chucking. The last method is best for the following reasons. The tool can pass clear over the surfaces at each chucking without danger of coming into contact with the chuck jaws, which would cause damage to both; second, at the last chucking, the chuck jaws being inside the ring, the latter may be tested for truth with a pointer fixed in the tool rest, and therefore set quite true.

It is obvious that at neither chucking should the ring be set so far within the chuck jaws that there will be danger of the tool touching them when turning the radial face.

In the case of a ring too thin to permit this, and of too large a bore to warrant making a mandrel for it, the ring may be held on the outside and bored, and both radial faces turned to within a short distance of the chuck jaws; at the second chucking, the chuck jaws being within the ring bore, the work may be set true with a pointer, as before, and finished.

If, however, a number of such rings were to be turned, it would pay to turn up another and thicker ring, and use it as a mandrel after the bore and one radial face of the ring had been turned.

TO TURN AN ECCENTRIC STRAP AND ECCENTRIC.—The eccentric strap should be turned first, because it can then be taken apart and its fit to the eccentric tried while the latter is in the lathe, which is not the case with the eccentric. The strap should first be held in a universal chuck bolted to the face plate, or held in dogs such as shown in Fig. 893 at C, and one face should be turned. It should then be turned round on the chuck to bore it, and face the other side.

If the shape of the strap will admit it, it is best chucked by plates and bolts holding the face first turned to the face plate,

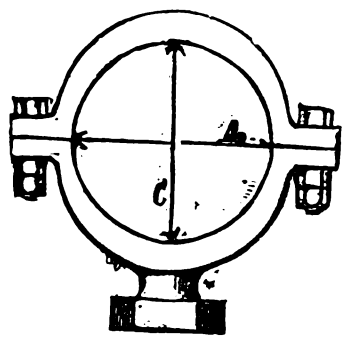

Fig. 1230.

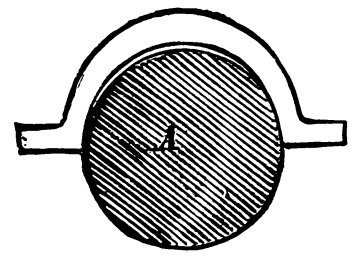

Fig. 1231.

because in this case there will be no pressure tending to spring the straps out of their natural shape; otherwise, however, it may be held in a universal or independent jaw chuck, or if too large for insertion in chucks of this kind (which are rarely made for large lathes) it may be held in dogs such as shown in Fig. 893 at C.

If after an eccentric strap is bored, and the bolts that hold its two halves together have been slackened, its diameter at A and at C, Fig. 1230, be measured, it will be found that A is less than C. The cause of this is partly explained under the head of tension of castings; but it is necessary to add that the diameters at A and at C in the figure are equal while the strap is in the lathe, or until the bolts holding the two halves of the strap together are released, yet so soon as this is done the diameter at A will reduce, the bore becoming an oval.*

Now, it is obvious that the eccentric must be turned to the diameter at C, or otherwise it will have lost motion in the strap. If, however, the eccentric be turned to the diameter of C, the strap cannot be tried on, as it will bind at the corners, as shown in Fig. 1231. To remedy this evil it is usual to put a piece of sheet tin or metal between the joint faces of the two halves of the eccentric straps before they are chucked to turn them, and to bore them too large to the amount of the thickness of sheet metal so employed. After the straps are bored these pieces of metal are removed, and the strap halves bolted together as in Fig. 1230, the diameter at C being that to which the eccentric must be turned.

If the sheet metal so inserted were thick enough, the strap bore will measure the same at A as at C, Fig. 1230. If it were too thick the diameter at A will be greatest, while if too thin the diameter at A will be the least. There is no rule whereby the necessary thickness for a given size of strap may be known, and the workman is usually governed by his experience on castings of similar metal, or from the same moulding shop.

He prefers, however, to be on the safe side by not putting in too great a thickness, because it is easier to scrape away the bore at the joint than it is to file away the joint faces. The following thicknesses for the respective diameters may be considered safe for castings that have not been reheated after casting.

Diameter of bore. Inches.	Thickness of metal to place between the strap valves. Inch.
6	$\frac{1}{64}$
12	$\frac{1}{32}$
18	$\frac{3}{64}$
24	$\frac{1}{16}$

In turning a new strap for an old eccentric, it will be necessary, when taking the diameter of the eccentric, to take a piece of tin of the same thickness as that placed between the eccentric lugs or jaws, and place it between the caliper leg and the eccentric, so that the diameter of the strap across C, Fig. 1230, may be made equal when the tin is removed to the diameter of the eccentric.

In turning up the eccentric, the plain face should be faced first, setting it true, or nearly so, with the circumference of the eccentric, as will be the case if the circumference is held in a universal chuck, but if the hub is so long that this cannot be done because the chuck jaws cannot reach the circumference, the hub itself may be held in an independent jaw chuck.

The face turned may then be turned round, so as to meet the face of the chuck against which it should bed fairly, so as to run true. At this chucking the hole bore, the hub, and the radial faces should be turned, all these surfaces being roughed out before any one surface is finished.

The eccentric must then be again reversed, so that the face of the hub meets, the face plate being held by bolts as shown for a crank in figure, when the work being set to the lines marked (so as to give it the correct amount of throw) may be turned to fit the bore of the strap, the strap being taken apart so as to try it on, which this method of chucking will readily permit.

Now, in an eccentric, the surfaces requiring to be most true one with the other are those of the bore and of the circumference where the strap fits, and since the latter was turned with the hub face to the chuck, and that hub face was turned at the same chucking as the hole was bored (and must, therefore, be true to the bore), the bore and circumference will be as true as it is practicable to get them, because upon the truth of the last chucking alone will the truth of the work depend.

Small eccentrics may be held for all their chuckings in jaw chucks, but not so truly as if chucked on a face plate, because of the difficulty of keeping the radial faces of such jaws true, which occurs by reason of the causes explained with reference to Figs. 848 and 849.

Eccentrics having so much throw upon them as to render it difficult to hold them for the last chucking by the method above given (by bolts through the bore), usually have openings through them on the throw side, and in this case parallel pieces may be placed behind the radial face (on the hub side of the eccentric), such parallel pieces being thick enough to keep the hub face clear of the chuck face, and bolts may be passed through the said opening to hold the eccentric. Another method would be as follows:—

The outside diameter of the eccentric may be gripped in a dog chuck, if the dogs of the chuck project out far enough to reach it (otherwise the dogs may grip the hub of the eccentric), while the hole is bored and the plain face of the eccentric turned. The eccentric must then be reversed in the lathe, and the hub and the radial face on that side must be turned. Then the plain face of the eccentric must be bolted to the face plate by plates placed across the spaces which are made to lighten the eccentric, and by a plate across the face of the hub. The eccentric, being set true to the lines, may then be turned on its outside diameter to fit the

* This occurs in all castings of similar form, as brasses, &c.

strap; to facilitate which fitting, thin parallel strips may be placed between the face plate and the plain face of the eccentric at this last chucking. It will be observed that, in either method of chucking, the outside diameter of the eccentric (that is to say, the part on which the strap fits) is turned with the face which was turned at the same chucking at which the hole was bored, clamped to the face plate. In cases where a number of eccentrics having the same size of bore and the same amount of throw are turned, there may be fitted to the face plate of the lathe a disk (such as shown in Fig. 888), of sufficient diameter to fit the hole of the eccentric, the said disk being fastened to the face plate at the required distance from the centre of the lathe to give the necessary amount of throw to the eccentric. The best method of fastening such a disk to the face plate is to provide it with a plain pin turned true with the disk, and let it fit a hole (bored in the face plate to receive it) sufficiently tightly to be just able to be taken in and out by the hand, the pin being provided with a screw at the end, so that it can be screwed tight by a nut to the face plate. The last chucking of the eccentric is then performed by placing the hole of the eccentric on the disk, which will insure the correctness of the throw without the aid of any lines on the eccentric which may be set as true as the diameter of the casting will permit, and then turned to fit the strap.

TO TURN A CYLINDER COVER.—A cylinder cover affords an example of chucking in which the work done at one chucking requires to be very true with that done at a subsequent chucking, thus the gland hole which is on one side requires to be quite true with the diameter that fits into the cylinder bore, this diameter being on the opposite side.

If the polished or gland side of the cover be turned first, the hole for the packing ring and that for the gland may be bored with the assurance that one will be true with the other, while the polished outside face may be turned at the same chucking.

But when the cover is turned round in the lathe to turn the straight face, though the hole may be set true as far as can be ascertained in its short length, yet that length is too short to be an accurate guide, and the hole for the packing ring may appear true, while that for the gland, being longer, will have any error in the setting, multiplied by reason of its greater length. It is better, therefore, to turn the plain face first, gripping the cover by the gland flange so that the plain radial face, the step that fits the cylinder bore, and the outer edge of the cover flange may be turned at one chucking; then when the cover is turned round in the chuck, the flat face may be set true by resting against the radial surface of the chuck jaws, and the concentric truth may be set by the outer edge of the flange, which, being of the extreme diameter of the cover, will most readily show any want of truth in the setting. If in this case a universal chuck be used, and the work does not run quite true, it may be corrected by slacking the necessary dog or jaw on one side, and tightening up again from the screw of the necessary jaw on the other.

This occurs because from the wear, &c., there is always some small amount of play or lost motion in the jaw screws, and in the mechanism operating them, and by the above means this is taken advantage of to true the work.

If from any cause the work cannot be held for the first chucking by means of the gland hole flange, it must be held by the circumferential edge of the cover, letting the jaws envelop as small a distance over that edge as possible, the protruding part of it may then be turned up as close to the chuck jaws as possible, and this turned part may still be used to set the cover concentrically true at the second chucking.

In a very small cover the gland hole may have a mandrel fitted to it and be turned therefrom on both radial faces, or on one face only, the other being turned at the chucking at which the holes were bored.

In a cover too large to be held in a jaw chuck, the cover may be held in chucking dogs such as shown at C in Fig. 893, the edge protruding as much as possible from the dog screws, and being turned half way across at one chucking, and finished at the second chucking. To set the radial face at the second chucking, the surface gauge, applied as shown in Fig. 894, may be employed. If the bore of the packing ring or piston rod hole is large enough to permit it, that hole and the gland hole may be bored at the same chucking as that at which the plain face and step that fits in the cylinder bore is turned, thus ensuring truth in all the essential parts of the cover.

But in this case these operations should be performed at the last of the two chuckings, so as to eliminate any error that might arise from the casting altering its shape by reason of the removal of the metal on the radial face of the gland hole side of the cover.

TO TURN A PULLEY.—A pulley affords an excellent example of lathe work, because it may be operated upon by several different methods: thus, for boring it may be held, if small, in a dog chuck, with the jaws inside the rim; in a dog chuck with the jaws outside the rim; in a dog chuck by the hub itself (if the hub is long enough). A larger pulley may be chucked for boring by the rim held in a jaw chuck; by the rim held by bolts and plates, or by the rim held by dogs, such as shown in Fig. 893, or by the arms rested on pieces placed between them and the chuck, and then bolts and plates applied to those arms.

The rim may be turned by placing the pulley on a mandrel and driving that mandrel by a dog or carrier; by placing it on a mandrel and driving it by a Clements driver such as shown in Fig. 753, and having two diametrically opposite driving pins, placed to bear against diametrically opposite arms; by holding the arms to the chuck as before described, and performing the boring and facing at one chucking; or by holding the rim on its inside by the chuck jaws, so as to turn and bore the pulley at one chucking, which can be done when the inside of the rim is parallel, or not sufficiently coned to cause it to slip off the jaws, or when the jaws will reach to the centre of the rim width.

The advantages and disadvantages of these various methods are as follows:—

From the weakness of the pulley rim it is apt to distort when held with sufficient chuck-jaw pressure to enable the turning of the rim face and edge. But this would not affect the truth of the hole; hence the rim may be gripped in a chuck to bore the hole and face the hub. If so held it should be held true to the inside face of the rim, so that the bore will be true to the same, and then in turning the outside diameter it will be made as true as possible with the rim, which will preserve the balance of the pulley as much as possible. For these reasons the inside of the rim should be the part set to run true, whatever method of chucking be employed; hence, if the circumstances will permit of holding the hub to bore it, an independent jaw chuck should be employed (that is, of course, a chuck capable of independent jaw movement).

If the pulley be chucked by the arms, it is well-nigh impossible to avoid springing those arms from the pressure of the bolts, &c., holding them, and as a result the pulley face, though turned true, will not be true of itself, nor true with the hole, when the arms are released from such pressure.

If the pulley is of such a large size that its rim must be held by bolts and plates while the boring is progressing, such bolts, &c., must be placed on the outside of the rim, so as not to be in the way when setting the pulley true to the inside of the rim.

A small pulley may be turned on a mandrel driven by a dog, which is the truest method of turning, because the rim is in this case strained by the pressure of the cut only. But a dog will not drive a cut at such a leverage as exists at the rim of a pulley above about 18 inches in diameter; furthermore, in a large wheel there would not be sufficient friction between a mandrel and the pulley bore to drive the roughing cut on the pulley face.

It is necessary, therefore, to drive the pulley from the arms, while holding it on a mandrel, but if it be driven by one arm the whole strain due to driving will fall on that one arm, and on one side of the pulley only, and this will have a tendency to cause the rim at and near its junction with that arm to spring or deflect from its natural position, and, therefore, to be not quite true; all that can be done, therefore, is to drive by two arms with a Clements driver, so as to equalize the pressure on them.

An excellent method of chucking a pulley, and one that with care avoids the disadvantages mentioned in the foregoing methods,

is shown in Figs. 1232 and 1233. It consists of a clamping dog, Fig. 1234, that fastens to the lathe face plate, and secures the pulley by its arms, while supporting the rim and preventing it from chattering, if it is weak or slight.

This dog is bolted to the face plate by the two studs A and B.

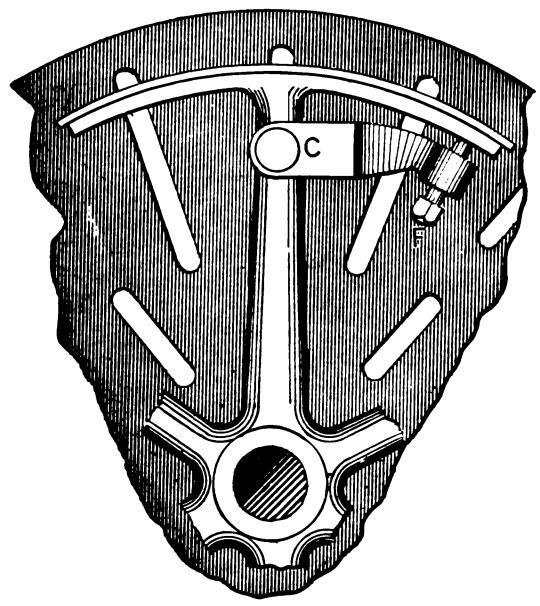

Fig. 1232.

At C is a set screw for clamping the pulley arms against the screw D, and at F is a screw that steadies the pulley rim between the arms.

CUTTING SCREWS IN THE LATHE WITH SLIDE REST TOOLS.—In order to cut a thread in the lathe with a slide rest tool,

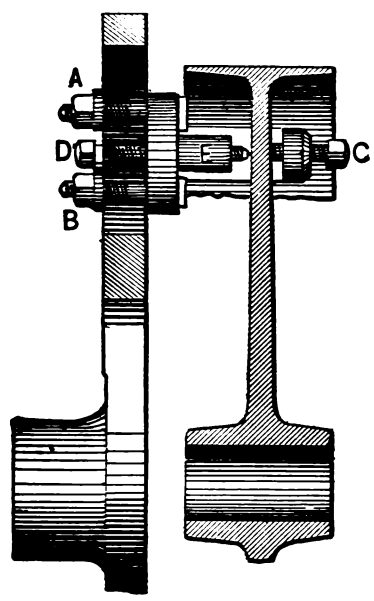

Fig. 1233.

it is necessary that the gear-wheels which transmit motion from the cone spindle to the feed screw shall be of the proportions necessary to give to the lathe carriage and slide rest sufficient lateral movement or traverse for lathe revolution to cut a thread of the desired pitch.

Suppose now that the feed screw makes a revolution in the

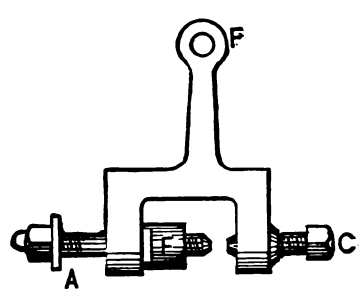

Fig. 1234.

same time that the cone spindle does, and it is evident that the thread cut by the slide rest tool will be of the same pitch as is the pitch of the lathe feed screw. If the feed screw gear-wheels of the lathe are what is called single geared (which means that no one stud in the change gearing carries more than one gear-wheel), it does not matter what are the sizes or how many teeth there are in the wheels used to convey or transmit motion from the cone spindle to the feed screw, for so long as the number of teeth on the cone spindle gear and that on the feed screw are equal, the feed screw will make one revolution in the same time as the cone spindle makes a revolution, and the cutting tool will travel a lateral distance equal to the pitch of the lead screw.

Suppose, for example, that Fig. 1235 represents the screw cutting gear or change wheels of a lathe, wheel D being the driver, I an intermediate wheel for transmitting motion from the driver D to the lead-screw wheel S. Suppose, also, that D has 32, I 80, and S 32 teeth, and we have a simple or single-geared lathe. In this

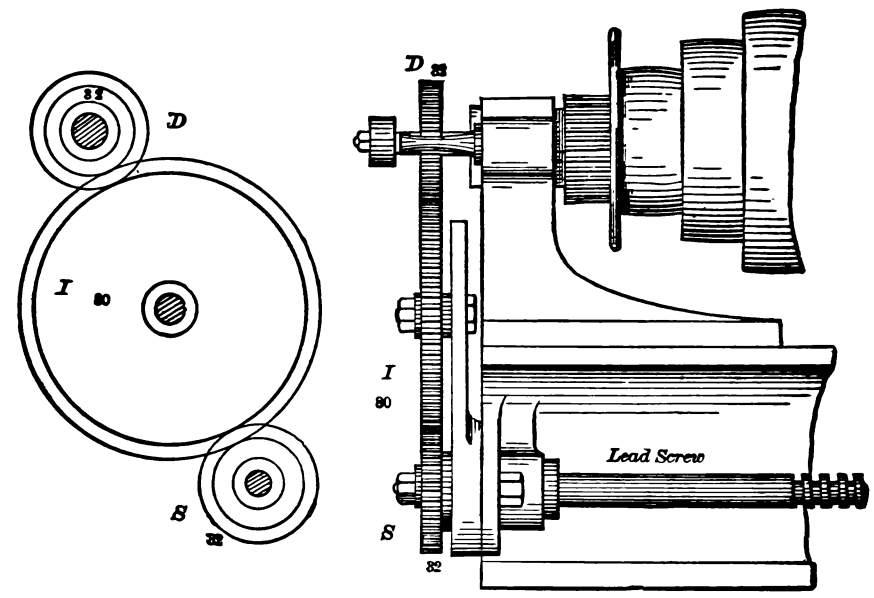

Fig. 1235.

case it may first be proved that we need not concern ourselves with the number of teeth in the intermediate I, because its number of teeth is of no consequence. For example, the 32 teeth in D will in a revolution move 32 of the teeth in I past the line of centres, and it is obvious that I will move the 32 teeth in S past the line of centres, causing it to make one revolution the same as D. If any other size of wheel be used for an intermediate, the effect will be precisely the same, the revolutions of D and of S remaining equal. Under these conditions the lathe would cut a thread whose pitch would be the same as that of the thread on the lead screw.

Now let us turn to Fig. 1236, representing an arrangement of gearing common in American practice, and we have within the lathe-head three gears, A, B, and C, which cannot be changed.

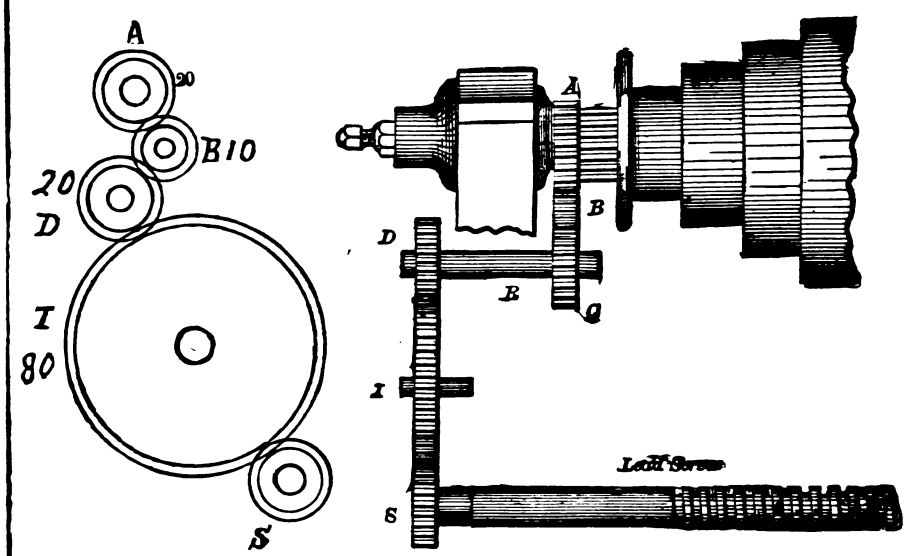

Fig. 1236.

Of these, B and C are simply intermediate wheels, the respective diameters of which have no effect upon the revolutions of the lead screw, except that they convey the motion to D. To demonstrate this, suppose the wheels to have the number of teeth marked respectively against them in the end view of the figure, C and D having each 20 teeth, and the one revolution of the live spindle wheel A will cause the lead-screw wheel to make one revolution, because A and S contain the same number of teeth. This may be made plain as follows: The 20 teeth in A will in one revolution cause B to make two revolutions, because B has but half as many teeth as A. The two revolutions of B will cause C to make but one

revolution, because C has twice as many teeth as B has. Now, C and D are fast on the same shaft R; hence they revolve together, the one revolution of C simply being conveyed by the shaft R to D, and it is clear that the one revolution of A has been conveyed without change to D, and that, therefore, D may be considered to have simply taken the place of A, unaffected by the wheels B, C. Wheel I is again an intermediate, so that, whatever its diameter or number of teeth, one revolution of D will cause one revolution of S. Thus in this arrangement the lead screw will again revolve at the same speed as the live spindle, and the thread cut will be of the same pitch as the pitch of the lead screw. Practically, then, all the wheels between A and S, as thus arranged, act as simple intermediates, the same as though it were a single-geared lathe, which occurs because C and D have the same number of teeth, and we have, therefore, made no use of the shaft R to compound the gearing.

The term "compounded" as applied to the change gears of a lathe, means that there exists in it a shaft or some equivalent means by which the velocity of the wheels may be changed. Such a shaft is shown at R in Fig. 1236, and it affords a means of compounding by placing on its outer end, as at D, a wheel that has a different number of teeth to that in wheel C. In Fig. 1237 this change is made, wheel D having 40 teeth instead of the 20 it had before. As in the former case, however, it will make one revolution to one of C or one of A, but having 40 teeth it will move 40 of the teeth in I past the line of centres, and this will cause the lead screw wheel S to make two revolutions, because it has 20 teeth only. Thus, the compounding of C and D on shaft R has caused S to make two revolutions to one of A, or, what is the same thing, one revolution of A will in this case cause S to make two revolutions, and the thread cut would be twice as coarse as the lead-screw thread. In the case of a lathe geared as in either Fig. 1235 or 1236, all the wheels that we require to consider in calculating the change wheels are D and S. Now, the shaft R is called the "mandrel," the "stud," or the "spindle," all three terms being used, and the wheel D is the wheel on the stud, mandrel, or spindle, while in every case S is that on the lead screw, and the revolutions of this wheel D and those of the lead screw will be in the same proportion as exists between their numbers of teeth. In considering their revolutions it is to be borne in mind that when D has more teeth than S the speed of the lead screw is increased, and the lathe will cut a thread coarser than that of its lead screw, or when D has less teeth than S the speed

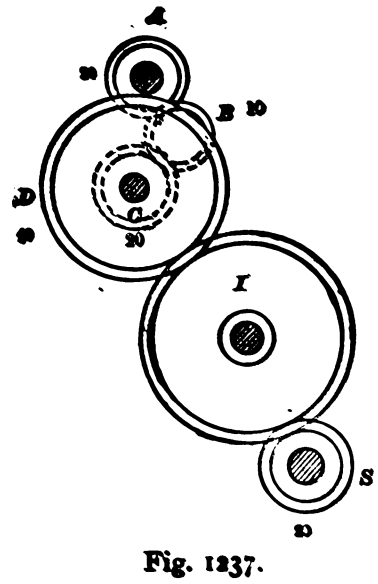

Fig. 1237.

of the lead screw is diminished, and the pitch of thread cut will be finer than that of the lead screw.

Another method of compounding is shown in Fig. 1238, the compounded pair C D being on a stud carried in the swing frame F. Now, suppose A has 32, C 64, D 32, and S 64 teeth, the revolution being in the same proportion as the numbers of teeth, C will make one-half a revolution to one revolution of A, and D, being fast to the same stud as C, will also make one-half revolution to one revolution of A. This one-half revolution of D will cause S to make one-quarter of a revolution; hence the thread cut will be four times as fine as the pitch of the thread on the lead screw, because while the lathe makes one turn the lead screw makes one-quarter of a turn. In this arrangement we are enabled to change wheel C as well as wheel D (which could not be done in the arrangement shown in Fig. 1236), and for this reason more changes can be made with the same number of wheels. When the wheel C makes either more or less revolutions than the driver A, it must be taken into account in calculating the change wheels. As arranged in Fig. 1236, it makes the same number as A, which is a very common arrangement, but in Fig. 1238 it is shown to have twice as many teeth as A; hence it makes half as many revolutions. In the latter case we have two pairs of wheels, in

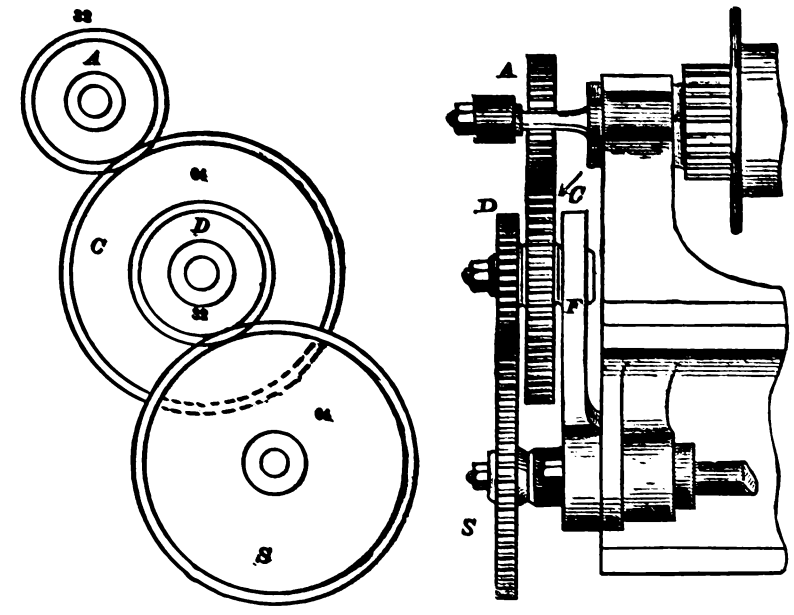

Fig. 1238.

each of which the driven wheel is twice the size of the driver; hence the revolutions are reduced four times.

Suppose it is required to cut a thread of eight to an inch on a lathe such as shown in Fig. 1235, the lead screw pitch being four per inch, and for such simple trains of gearing we have a very simple rule, as follows:—

Rule.—Put down the pitch of the lead screw as the numerator, and the pitch of thread you want to cut as the denominator of a vulgar fraction, and multiply both by the pitch of the lead screw, thus:

$$\text{Pitch of lead screw } \frac{4}{8} \times \frac{\text{Pitch of lead screw. } 4}{4} = \frac{16}{32} = \begin{cases}\text{the number of teeth for the wheel on the spindle.}\\ \text{the number of teeth for the wheel on the lead screw.}\end{cases}$$

$$\text{Pitch to be cut } \frac{4}{8}$$

There are three things to be noted in this rule; and the first is, that when the pitch of the lead screw and the pitch of thread you want to cut is put down as a fraction, the numerator at once represents the wheel to go on the stud, and the denominator represents the wheel to go on the lead screw, and no figuring would require to be done providing there were gear-wheels having as few teeth as there are threads per inch in the lead screw, and that there was a gear-wheel having as many teeth as the threads per inch required to be cut. For example, suppose the lathe in Fig. 1236 to have a lead screw of 20 per inch, and that the change wheels are required to cut a pitch 40, then we have $\frac{20}{40}$, the 20 to go on at D in Fig. 1236 and the 40 to go on the lead screw. But since lead screws are not made of such fine pitch, but vary from two threads to about six per inch, we simply multiply the fraction by any number we choose that will give us numbers corresponding to the teeth in the change wheels. Suppose, for example, the pitch of lead screw is 2, and we wish to cut 6, then we have $\frac{2}{6}$, and as the smallest change wheel has, say, 12 teeth we multiply the fraction by 6, thus: $\frac{2}{6} \times \frac{6}{6} = \frac{12}{36}$. If we have not a 12 and a 36 wheel, we may multiply the fraction by any other number, as, say, 8: thus: $\frac{2}{6} \times \frac{8}{8} = \frac{16}{48}$, giving us a 16 wheel for D, Fig. 1236, and a 48 wheel for the lead screw.

The second notable feature in this rule is that it applies just the same whether the pitch to be cut is coarser or finer than the lead screw; thus: Suppose the pitch of the lead screw is 4, and we want to cut 2. We put these figures down as before $\frac{4}{2}$, and proceed to multiply, say, by 8; thus: $\frac{4}{2} \times \frac{8}{8} = \frac{32}{16}$, giving a 32 and a 16 as the necessary wheels.

The third feature is, that no matter whether the pitch to be cut is coarser or finer than the lead screw, the wheels go on the lathe just as they stand in the fraction; the top figure goes on top in the lathe, as, for example, on the driving stud, and the bottom figures of the fraction are for the teeth in the wheel that goes on the bottom of the lathe or on the lead screw. No rule can possibly be simpler than this. Suppose now that the pitch of the lead screw is 4 per inch and we want to cut $1\frac{1}{2}$ per inch. As the required pitch is expressed in half inches, we express the pitch of the lead in half inches, and employ the rule precisely as before. Thus, in four there are eight halves; hence, we put down 8 as the numerator, and in $1\frac{1}{2}$ there are three halves, so we put down 3 and get the fraction $\frac{8}{3}$. This will multiply by any number, as, say, 6; thus: $\frac{8}{3} \times \frac{6}{6} = \frac{48}{18}$, giving us 48 teeth for the wheel D in Fig. 1236, and 18 for the lead screw wheel S.

In a lathe geared as in Fig. 1235 the top wheel D could not be readily changed, and it would be more convenient to change the lead screw wheel S only. Suppose, then, that the lead screw pitch is 2 per inch, and we want to cut 8. Putting down the fraction as before, we have $\frac{2}{8}$, and to get the wheel S for the lead screw we may multiply the number of teeth in D by 8 and divide it by 2; thus: $32 \times 8 = 256$, and $256 \div 2 = 128$; hence all we have to do is to put on the lead screw a wheel having 128 teeth. But suppose the pitch to be cut is $4\frac{1}{4}$, the pitch of the lead screw being 2. Then we put both numbers into quarters, thus: In 2 there are 8 quarters, and in $4\frac{1}{4}$ there are 17 quarters; hence the fraction is $\frac{8}{17}$. If now we multiply both terms of this $\frac{8}{17}$ by 4 we get $\frac{32}{68}$, and all we have to do is to put on the lead screw a wheel having 68 teeth.

When we have to deal with a lathe compounded as in Fig. 1238, in which the combination can be altered in two places—that is, between A and C and between D and S—the wheel A remaining fixed, and the pitch of the lead screw is 2 per inch, and it is required to cut 8 per inch—this gives us the fraction $\frac{2}{8}$, which is at once the proportion that must exist between the revolutions of the wheel A and the wheel S. But in this case the fraction gives us the number of revolutions that wheel S must make while the wheel A is making two revolutions, and it is more convenient to obtain the number that S requires to make while A is making one revolution, which we may do by simply dividing the pitch required to be cut by the pitch of the lead screw, as follows: Pitch of thread required, 8; pitch of lead screw, 2; $8 \div 2 = 4$ = the revolutions S must make while A makes one. We have then to reduce the revolutions four times, which we may do by putting on at C a wheel with twice as many teeth in it as there are in A, and as A has 32, therefore C must have 64 teeth. When we come to the second pair of wheels, D and S, we may put any wheel we like in place of D, providing we put on S a wheel having twice as many.

But suppose we require to cut a fractional pitch, as, say, $4\frac{1}{8}$ per inch, the pitch of lead screw being 2, all we have to do is to put the pitch of the lead screw into eighths, and also put the number of teeth in A into eighths; thus: In two there are 16 eighths, and in the pitch required there are 33 eighths; hence for the pitch of the lead screw we use the 16, and for the thread required we use the 33, and proceed as before; thus:

Pitch of thread required.		Pitch of lead screw.			
33	+	16	=	$2\frac{1}{16}$	= the revolution which A must make while wheel B makes one revolution.

The simplest method of doing this would be to put on at C a wheel having $2\frac{1}{16}$ times as many teeth as there are in A. Suppose then that A has 32 teeth, and one sixteenth of $32 = 2$, because $32 \div 16 = 2$. Then twice 32 is 64, and if we add the 2 to this we get 66; hence, if we give wheel C 66 teeth, we have reduced the motion the $2\frac{1}{16}$ times, and we may put on D and S wheels having an equal number of teeth. Or we may put on a wheel at C having the same number as A has, and then put on any two wheels at D and C, so long as that at S has $2\frac{1}{16}$ times as many teeth as that at D.

Again, suppose that the pitch of a lead screw is 4 threads per inch, and that it be required to find what wheels to use to cut a thread of $\frac{11}{16}$ inch pitch, that is to say, a thread that measures $\frac{11}{16}$ inch from one thread to the other, and not a pitch of $\frac{11}{16}$ threads per inch: First we must bring the pitch of the lead screw and the pitch to be cut to the same terms, and as the pitch to be cut is expressed in sixteenths we must bring the lead screw pitch to sixteenths also. Thus, in an inch of the length of the lead screw there are 16 sixteenths, and in this inch there are 4 threads; hence each thread is $\frac{4}{16}$ pitch, because $16 \div 4 = 4$. Our pitch of lead screw expressed in sixteenths is, therefore, 4, and as the pitch to be cut is $\frac{11}{16}$ it is expressed in sixteenths by 11; hence we have the fraction $\frac{4}{11}$, which is the proportion that must exist between the wheels, or in other words, while the lathe spindle (or what is the same thing, the work) makes 4 revolutions the lead screw must make 11.

Suppose the lathe to be single geared, and not compounded, and we multiply this fraction and get—

$$\frac{4}{11} \times \frac{4}{4} = \frac{16}{44} = \text{wheel to go on lead screw.}$$
$$\text{stud or mandrel.}$$

$$\text{Or, } \frac{4}{11} \times \frac{5}{5} = \frac{20}{55} = \text{wheel to go on lead screw.}$$
$$\text{stud or mandrel.}$$

$$\text{Or, } \frac{4}{11} \times \frac{6}{6} = \frac{24}{66} = \text{wheel to go on lead screw.}$$
$$\text{stud or mandrel.}$$

But suppose the lathe to be compounded as in Fig. 1235, and we may arrange the wheels in several ways, and in order to make the problem more practical, we may suppose the lathe to have wheels with the following numbers of teeth, 18, 24, 36, 36, 48, 60, 66, 72, 84, 90, 96, 102, 108, and 132.

Here we have two wheels having each 36 teeth; hence we may place one of them on the lathe spindle and one on the lead screw,

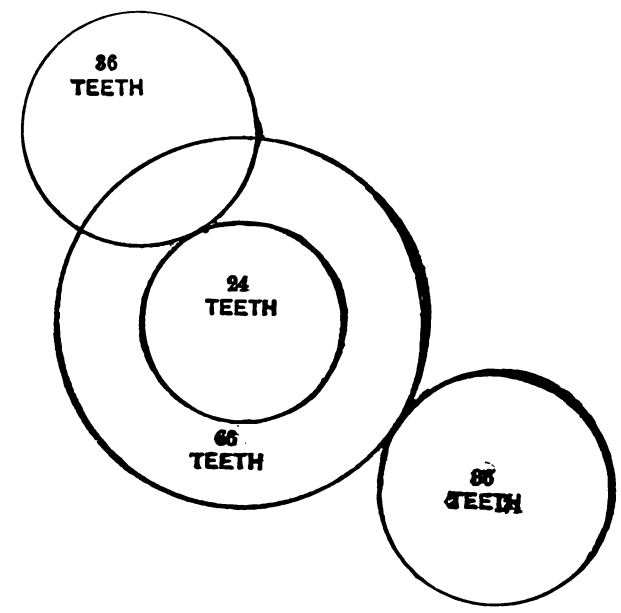

Fig. 1239.

as in Fig. 1239; and putting down the pitch of the lead screw, expressed in sixteenths as before, and beneath it the thread to cut also in sixteenths, we have:

$$\frac{4}{11} \times \frac{6}{6} = \frac{24}{66} = \text{wheel to be driven by lathe spindle,}$$
$$\text{,, to drive lead screw wheel;}$$

the arrangement of the wheels being shown in Fig. 1239.

We may prove the correctness of this arrangement as follows: The 36 teeth on the lathe spindle will in a revolution cause the 24 wheel to make $1\frac{1}{2}$ revolutions, because there are one and a half times as many teeth in the one wheel as there are in the other; thus: $36 \div 24 = 1\frac{1}{2}$. Now, while the 24 wheel makes $1\frac{1}{2}$, the 66 will also make $1\frac{1}{2}$, because they are both on the same sleeve and revolve together. In revolving $1\frac{1}{2}$ times the 66 will cause the 36 on the lead screw to make $2\frac{3}{4}$ turns, because $66 \div 36 = 2\frac{3}{4}$ (or expressed in decimals 2·75), and it thus appears that while the lathe spindle makes one turn, the lead screw will make $2\frac{3}{4}$ turns.

Now, the proportion between 1 and $2\frac{3}{4}$ is the same as that existing between the pitch of the lead screw and the pitch of the thread we want to cut, both being expressed in sixteenths; thus:

$$\begin{matrix}\text{Pitch of lead screw in sixteenths} \\ \text{,, to be cut in sixteenths}\end{matrix} \quad \begin{matrix}4 \\ 11\end{matrix}, \text{ and } 11 \div 4 = 2\tfrac{3}{4};$$

that is to say, 11 is $2\frac{3}{4}$ times 4.

Suppose it is required, however, to find what thread a set of gears already on the lathe will cut, and we have the following rule :

Rule.—Take either of the driven wheels and divide its number of teeth by the number of teeth in the wheel that drives it, then multiply by the number of teeth in the other driving wheel, and divide by the teeth in the last driven wheel. Then multiply by the pitch of the lead screw.

Example.—In Fig. 1240 are a set of change wheels, the first pair of which has a driving wheel having 36 teeth, and a driven

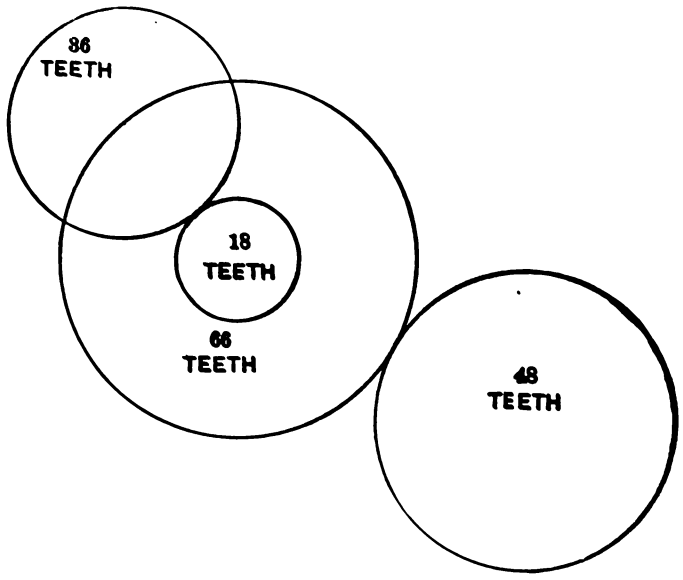

Fig. 1240.

wheel having 18 teeth. The second pair has a driving wheel of 66 teeth, and a driven wheel of 48.

Let us begin with the first pair and we have $36 \div 18 = 2$, and this multiplied by 66 is 132. Then $132 \div 48 = 2{\cdot}75$, and $2{\cdot}75$ multiplied by 4 is 11, which is the pitch of thread that will be cut. Now, whether this 11 will be eleven threads per inch, or as in our previous examples a pitch of $\frac{1}{11}$ inch from one thread to another or to the next one, depends upon what the pitch of the lead screw was measured in.

If it is a pitch of 4 threads per inch, the wheels will cut a thread

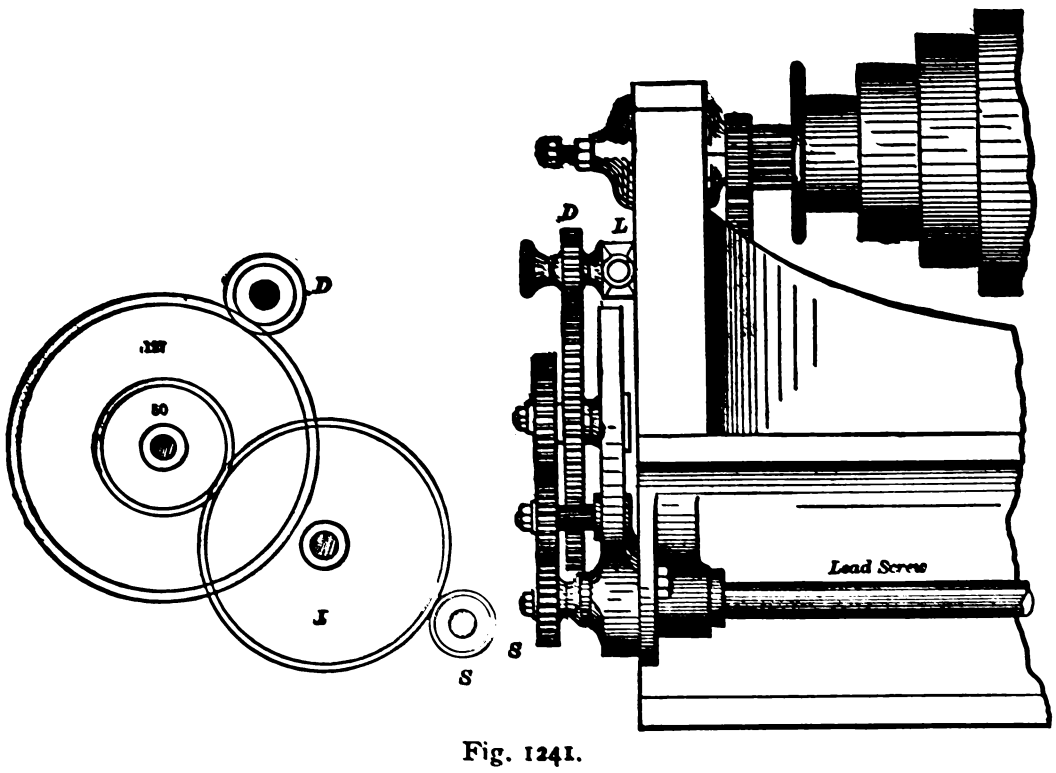

Fig. 1241.

of 11 per inch, while if it were a thread of $\frac{4}{11}$ pitch, the thread cut will be $\frac{11}{4}$ pitch.

Let us now work out the same gears beginning from the lead screw pair, and we have as follows :

Number of teeth in driver is 66, which divided by the number in the driven, 48, gives $1{\cdot}375$. This multiplied by the number of teeth in the driver of the other pair = 36 gives $49{\cdot}5$, which divided by the number of teeth in the driven wheel of the first pair gives $2{\cdot}75$, which multiplied by the pitch of the lead screw 4 gives 11 as before.

Taking now the second example as in Fig. 1240, and beginning from the first pair of gears, we have, according to the rule, $36 \div 48 \times 66 \div 18 \times 4 = 11$ = pitch the gears will cut; or proceeding from the second pair of gears, we have by the rule, $66 \div 18 \times 36 \div 48 \times 4 = 11$ = the pitch the gears will cut. It is not often, however, that it is required to determine what threads the wheels already on a lathe will cut, the problem usually being to find the wheels to cut some required pitch. But it may be pointed out that when the problem is to find the result produced by a given set of wheels, it is simpler to begin the calculation from the wheel already on the lathe spindle, rather than beginning with that on the lead screw, because in that case we begin at the first wheel and calculate the successive ones in the same order in which we find them on the lathe, instead of having to take the last pair in their reverse order, as has been done in the examples, when we began at the wheel on the lead screw, which we have termed the second pair.

The wheels necessary to cut a left-hand thread are obviously the same as those for a right-hand one having an equal pitch; all

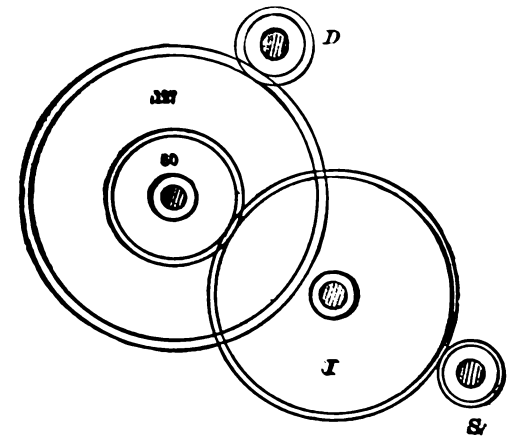

Fig. 1242.

the alteration that is necessary is to employ an additional intermediate wheel, as at J in Fig. 1241, which will reverse the direction of motion of the lead screw. For a lathe such as shown in Fig. 1235, this intermediate wheel may be interposed between wheels D and I or between I and S. In Fig. 1236, it may be placed between D and I or between I and S, and in Fig. 1238 it may be placed between A and C or between D and S.

Here it may be well to add instructions as to how to arrange the change wheels to cut threads in terms of the French centimètre. Thus, an inch equals $\frac{254}{100}$ of a centimètre, or, in other words, 1 inch bears the same proportion to a centimètre as 254 does to 100, and we may take the fraction $\frac{254}{100}$ and reduce it by any number that will divide both terms of the fraction without leaving a remainder; thus, $\frac{254}{100} \div 2 = \frac{127}{50}$. If, then, we take a pair of wheels having respectively 127 and 50 teeth, they will form a compound pair that if placed as in Fig. 1242 will enable the cutting of threads in terms of the centimètre instead of in terms of the inch.

Thus, for example, to cut 6 threads to the centimètre, we use the same change wheels on the stud and on the lead screw that would be used to cut 6 threads to the inch, and so on throughout all other pitches.

CUTTING DOUBLE OR OTHER MULTIPLE THREADS IN THE LATHE.—In cutting a double thread the change wheels are obviously arranged for the pitch of the thread, and one thread, as A in Fig. 251 is cut first, and the other, B, afterwards. In order to insure that B shall be exactly midway between A, the following method is pursued. Suppose the pitch of the lead screw is 4 threads per inch, and that we require to cut a double thread, whose actual pitch is 8 per inch, and apparent pitch 16 per inch, then the lead screw requires to make half a turn to one turn of the lathe spindle; or what is the same thing, the lathe spindle must make two turns to one of the lead screw, hence the gears will be two to one, and in a single-geared lathe we may put on a 36 and a 72, as in Fig. 1243, in which the intermediate wheels are omitted, as they do not affect the case. With these wheels we cut a thread of 8 per inch

and then, leaving the lead screw nut still engaged with the lead screw and the tool still in position to cut the thread already formed, we make on the change wheels a mark as at S T, and after taking off the driving gear we make a mark at space *u*, which is 18 teeth distant from S, or half-way around the wheel. We then pull the lathe around half a turn and put the driving gear on again with the space *u* engaged with the tooth T, and the lathe will cut the second thread exactly intermediate to the first one. If it were three threads that we require to cut, we should after the driving gear was taken off give the lathe one-third a revolution, and put it back again, engaging the twelfth space from S with tooth T, because one-third of 36 is 12.

It is obviously necessary, in cutting multiple threads in this way, to so select the change wheels that the driving gear contains a number of teeth that is divisible without leaving a remainder by the thread to be cut: thus, for a double thread the teeth must be divisible by two, hence a 24, 30, 34, 36, or any even number of

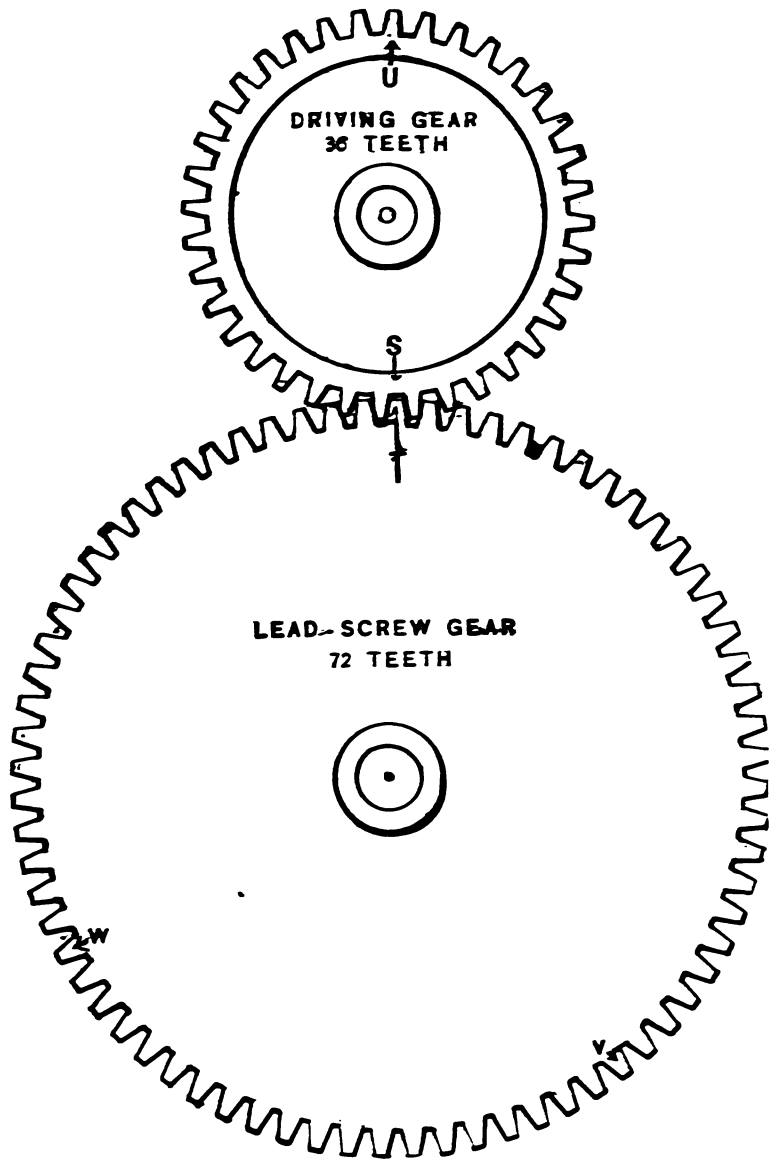

Fig. 1243.

teeth will do. For a triple thread the number of teeth in the driving gear must be divisible by 3, and so on.

But suppose the driving gear is fast upon the lathe spindle and cannot be taken off, and we may then change the position of the lead screw gear to accomplish the same object as moving the lathe spindle. Thus for a double thread we would require to remove the driving gear as before, and then pull round the lead screw so that the eighteenth tooth from T would engage with space S, which is obviously the same thing as moving the driving gear round 18 teeth.

In short work of small diameter the tool will retain its sharpness so long, that one tool will rough out and finish a number of pieces without requiring regrinding, and in this case the finishing cuts can be set by noting the position of the feed screw handle when the first piece is finished to size and the tool is touching the work, so that it may be brought to the same position in taking finishing cuts on the succeeding pieces; but the calipers should nevertheless be used, being applied to the threads as in Figs. 1244 and 1245, which is the best method when there is a standard to set the calipers by.

After a threading tool has carried its cut along the required length of the work, the carriage must be traversed back, so that the second cut may be started. In short work the overhead cross belt that runs the lathe backwards is sufficiently convenient and rapid for this purpose, but in long screws much time would be lost in waiting while the carriage runs back. In the Ames lathe there is a device that enables the carriage to be traversed back by hand, and the feed nut to be engaged without danger of

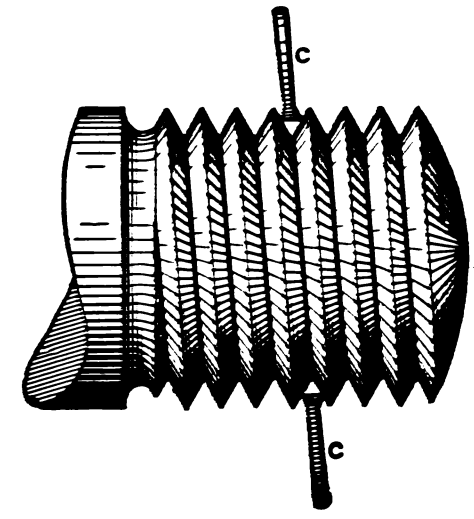

Fig. 1244.

cutting a double thread, or of the tool coursing to one side of the proper thread groove, which is a great convenience.

The construction of this device is shown in Fig. 574. In lathes not having a device for this purpose, the workman makes a chalk mark on the tail of the work driver, and another on the top of the lead screw gear, and by always moving the carriage back to the same point on the lathe bed, and engaging the lead screw nut when these two chalk marks are at the top of their paths of revolution, the tool will fall into its correct position and there will be no danger of cutting a double thread.

In cutting V threads of very coarse pitch it will save time, if the thread is a round top and bottom one, to use a single-pointed

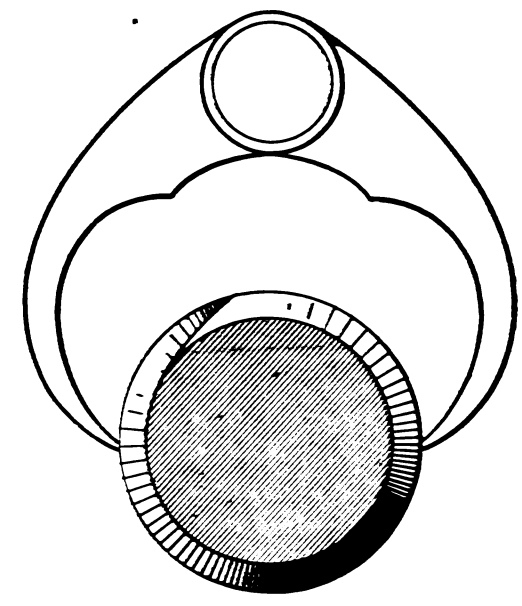

Fig. 1245.

slide rest tool, and cut up the thread to nearly the finished depth, leaving just sufficient metal for the chaser to finish the thread.

In using the single-pointed tool *on* the roughing cuts of very coarse pitches, it is an advantage to move the tool laterally a trifle, so that it will cut on one side or edge only. This prevents excessive tool spring, and avoids tool breakage.

This lateral movement should be sufficient to let the follower side or edge of the tool just escape the side of the thread, and all the cut be taken by the leading side or edge of the tool.

This is necessary because the tool will not cut so steadily on the follower as on the leading cutting edge, for the reason that

the pressure of the cut assists to keep the feed screw nut against the sides of the feed screw thread, taking up the lost motion between them, whereas the pressure of a cut taken on the follower side of the thread tends to force the thread of the feed nut away from the sides of the feed screw thread and into the space between

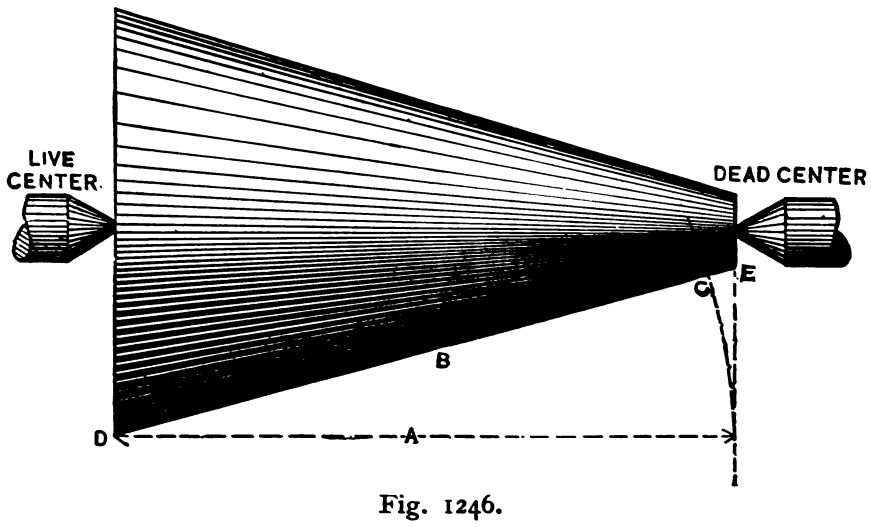

Fig. 1246.

the nut thread afforded by the lost motion, and as a result the slide rest will move forward when the tool edges meet exceptionally hard places or spots in the metal of the work, while in any event the tool will not operate so steadily and smoothly.

If the screw is a long one, the cutting should be done with a liberal supply of oil or water to keep it cool, otherwise the contraction of the metal in cooling will leave the thread finer than it was when cut. This is of special importance where accuracy of pitch is requisite.

In cutting a taper thread in a lathe, it is preferable that the taper be given by setting over the lathe tailstock, rather than by operating the cross slider from a taper-turning attachment, because the latter causes the thread to be cut of improper pitch. Thus, in Fig. 1246 is a piece of work between the lathe centres, and it will be readily seen that supposing the lathe to be geared to cut, say, 10 threads per inch, and the length A of the work to be 2 inches long, when the tool has traversed the distance A it will have cut 20 threads, and it will have passed along the whole length of the side B of the work and have cut 20 threads upon it, but since the length of line B is greater than that of A, the pitch of the thread cut will be coarser than that due to the change wheels.

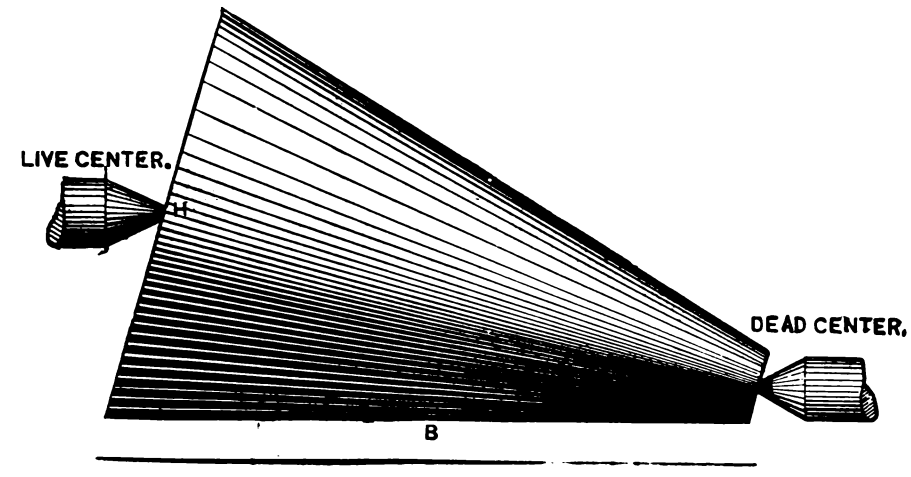

Fig. 1247.

The amount of the error is shown by the arc C, which is struck from D as a centre; hence from C to E is the total amount of error of thread pitch.

But if the lathe tailstock sets over as in Fig. 1247, then the pitch of the thread will be cut correct, because the length of B will equal the length of tool traverse; hence at each work revolution the tool would advance one-twentieth of the length of the surface on which the thread is cut, which is correct for the conditions.

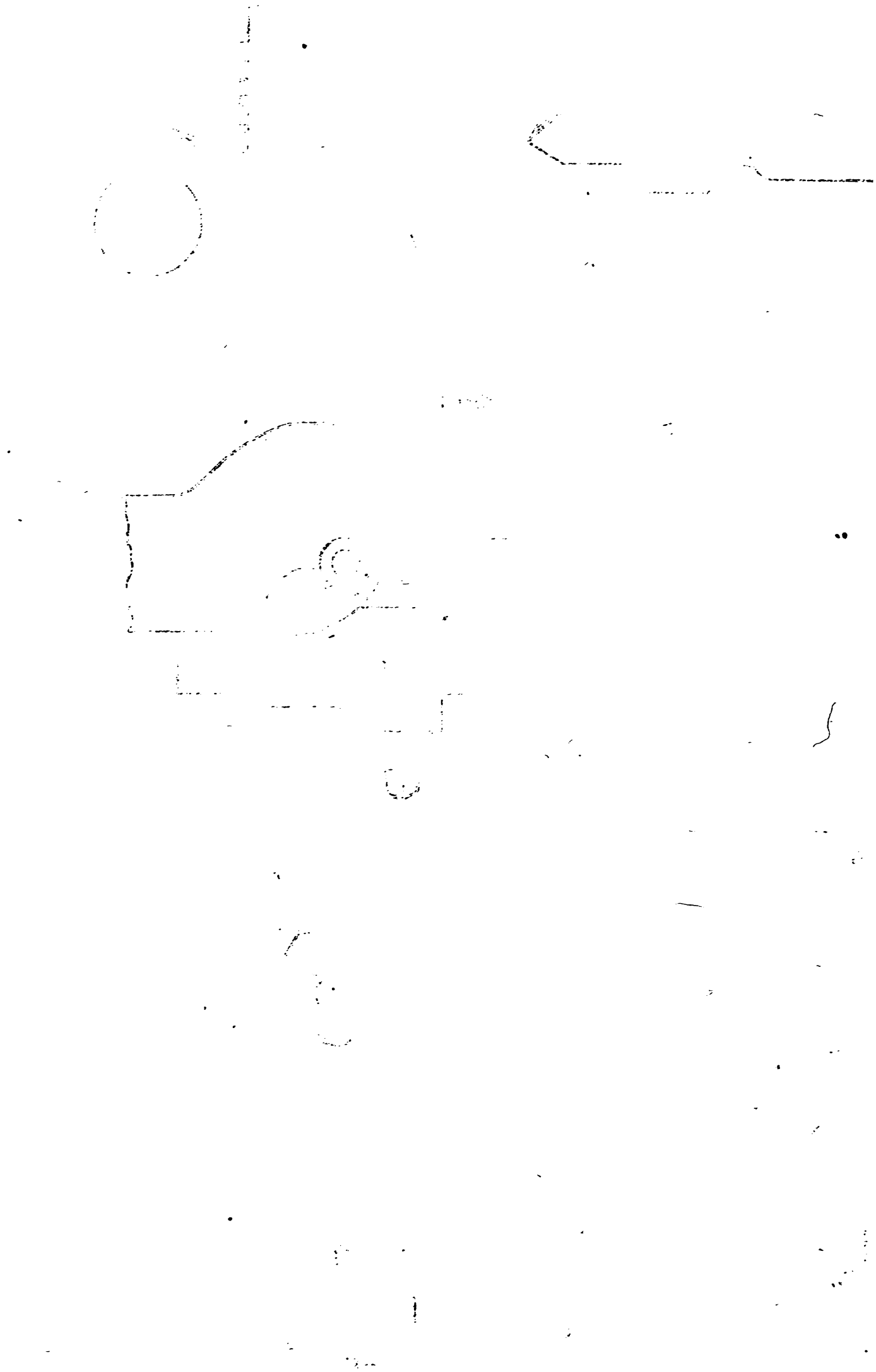

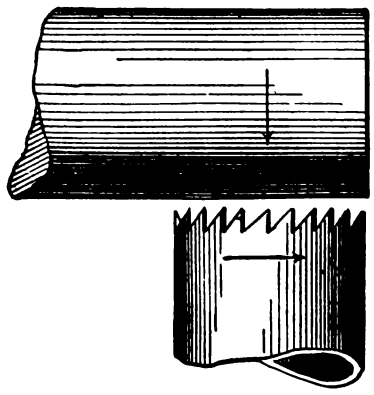

Fig. 1248.

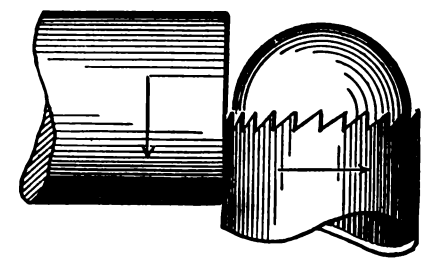

Fig. 1249.

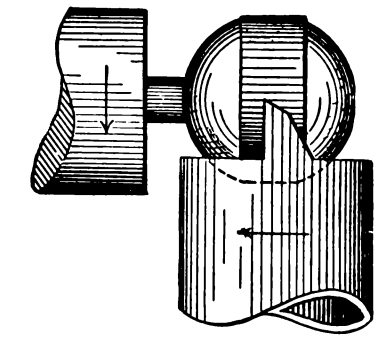

Fig. 1250.

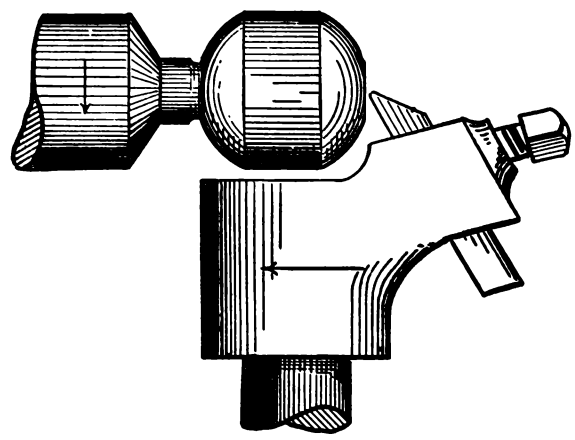

Fig. 1251.

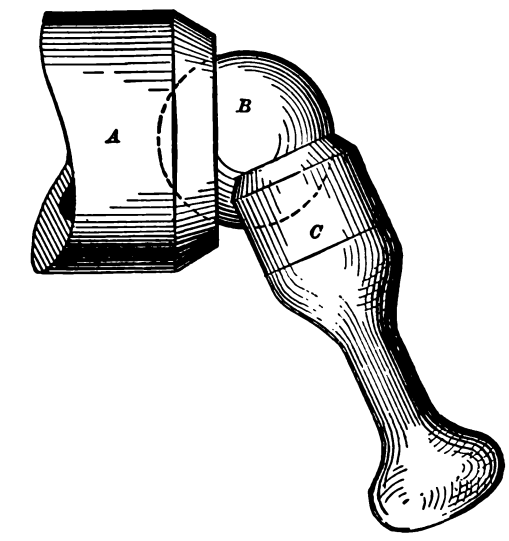

Fig. 1252.

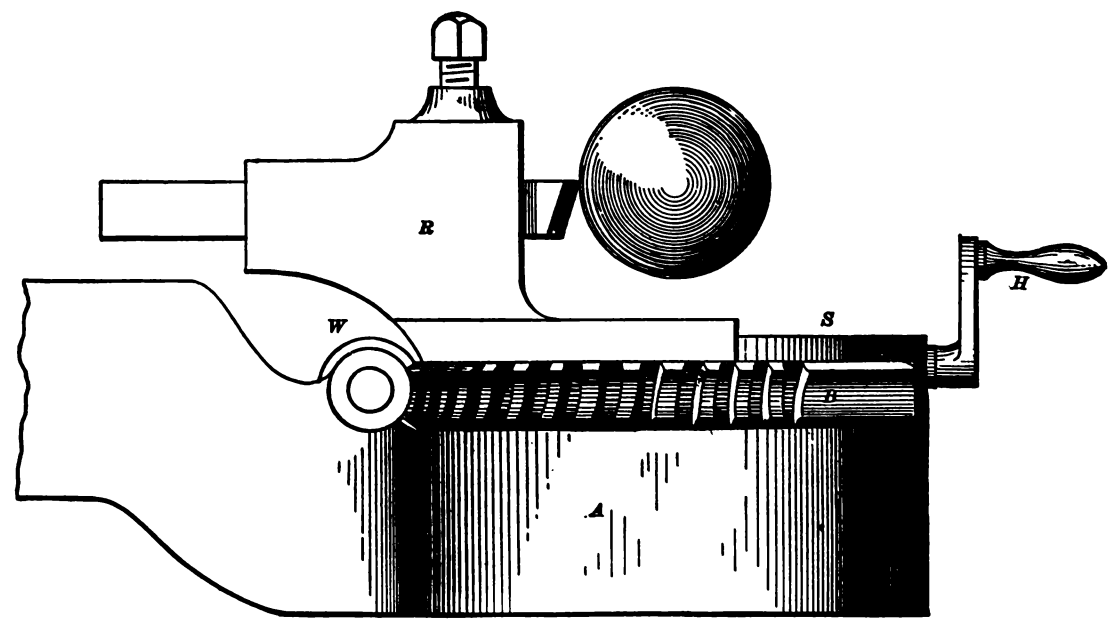

Fig. 1253.

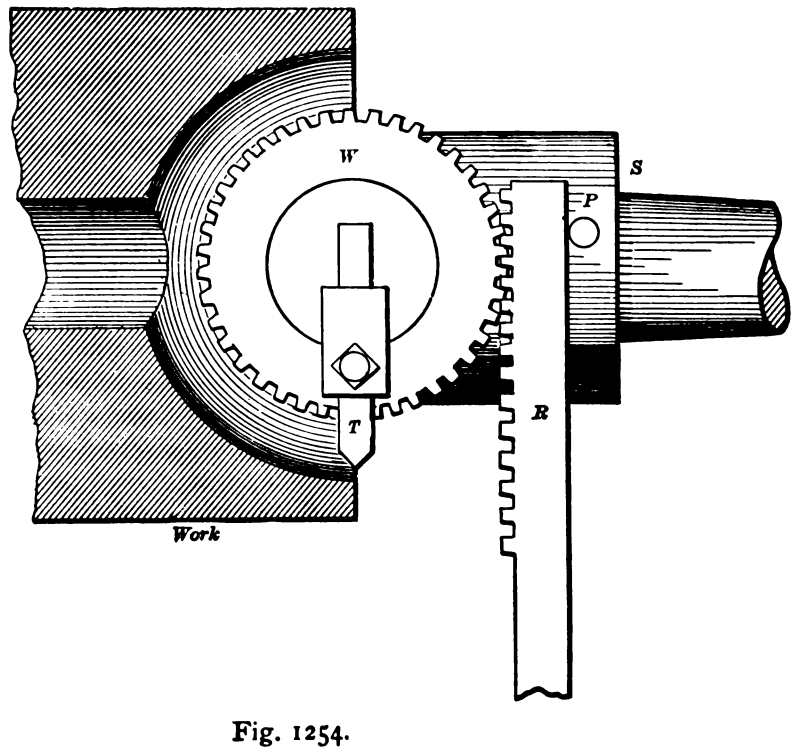

Fig. 1254.

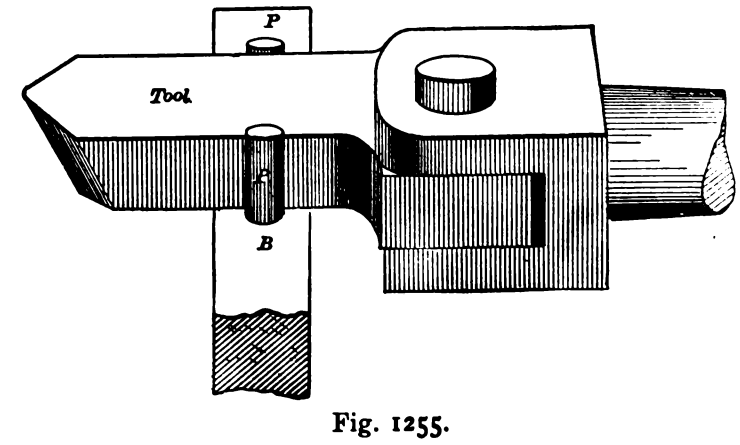

Fig. 1255.

Chapter XIII.—EXAMPLES IN LATHE WORK.

BALL TURNING.—One of the best methods of turning balls of the softer materials, such as wood, bone, or ivory, is shown in Figs. 1248 and 1249, in which are shown a blank piece of material and a tubular saw, each revolving in the direction denoted by the respective arrows. The saw is fed into the work and performs the job, cutting the ball completely off. In this case the saw requires to be revolved quicker than the work—indeed, as quickly as the nature of the material will permit, the revolving of the work serving to help the feed. Of course, the teeth of such a saw require very accurate sharpening if smooth work is to be produced, but the process is so quickly performed that it will pay to do whatever smoothing and polishing may be required at a separate operation. This method of ball cutting undoubtedly gave rise to the idea of using a single tooth, as in Fig. 1250. But when a single tooth is employed the work must revolve at the proper cutting speed, while the tooth simply advances to the feed. If the work was cut from a cylindrical blank the cutter would require to be advanced toward the work axis to put on a cut and then revolved to carry that cut over the work, when another cut may be put on, and so on until the work is completed. The diameter of ball that can be cut by one cutter is here obviously confined to that of the bore of the cutter, since it is the inside edge of the cutter that does the finishing.

This naturally suggests the employment of a single-pointed and removable tool, such as in Fig. 1251, which can be set to turn the

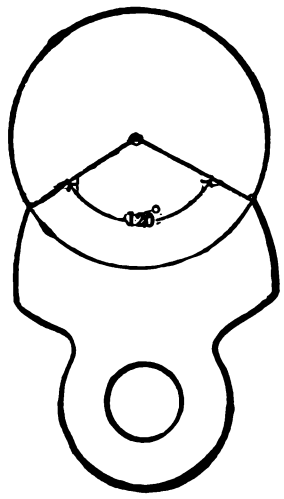

Fig. 1256.

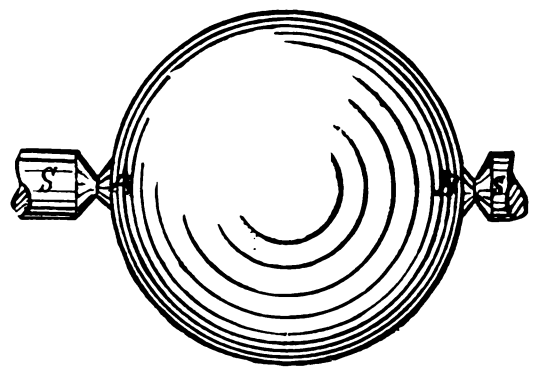

Fig. 1257.

required diameter of ball, and readily resharpened. To preserve the tool for the finishing cut several of such tools and holders may be carried in a revolving head provided to the lathe or machine, as the case may be. In any event, however, a single-pointed tool will not give the smoothness and polish of the ball cutter shown in Fig. 1252, which produces a surface like a mirror. It consists of a hardened steel tube C, whose bore is ground cylindrically true after it has been hardened. The ball B is driven in a chuck composed of equal parts of tin and lead, and the cutter is forced to the ball by hand. The ball requires to revolve at a quick speed (say 100 feet per minute for composition brass), while the cutter is slowly revolved.

A simple attachment for ball turning in an ordinary lathe is shown in Fig. 1253. It consists of a base A, carrying a plate B, which is pivoted in A; has worm-wheel teeth provided upon its circumference and a slideway at S, upon which slides a tool rest R, operated by the feed-screw handle H. The cut is put on by operating H, and the feed carried around by means of the screw at W. The base plate A may be made suitable to bolt on the tool rest, or clamped on in place of the tool, as the circumstances may permit; or in some cases it might be provided with a stem to fit in place of the dead centre. For boring the seats for balls or other curved internal surfaces the device shown in Fig 1254 may be used. It consists of a stem or socket S, fitting to the dead spindle in place of the dead centre, and upon which is pivoted a wheel W, carrying a tool T. R is a rack-bar that may be held in the lathe tool post and fed in to revolve wheel W and feed the tool to its cut. At P is a pin to maintain the rack in gear with the wheel. Obviously, a set-screw may be placed to bear against the end of the tool to move it endwise and put on the cut. An equivalent device is shown in Fig. 1255, in which the tool is pivoted direct into the stem and moved by a bar B, held in the tool post. The cut is here put on by operating the tail spindle, a plan that

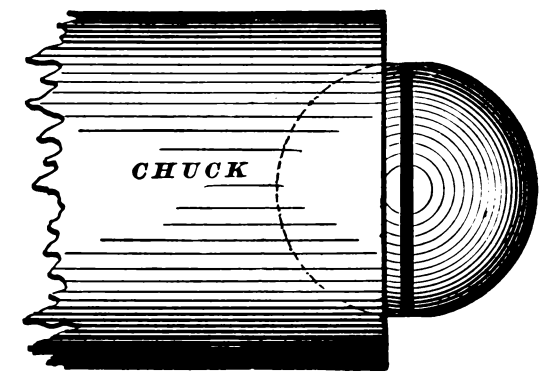

Fig. 1258.

may also be used in the device shown in Fig. 1254. The pins P upon the bar are for moving or feeding the tool to its cut. It is obvious that in all these cases the point of the tool must be out of true vertically with the axis of the work.

In turning metal balls by hand it is best to cast them with a stem at each end, as in Fig. 1257.

To rough them out to shape, a gauge or template, such as in Fig. 1256, is used, being about $\frac{1}{32}$ inch thick, which envelops about one-sixth of the ball's circumference. After the ball is roughed out as near as may be to the gauge, the stems may be nicked in, as in Fig. 1257, and broken off, the remaining bits, A, B, being carefully filed down to the template. The balls are then

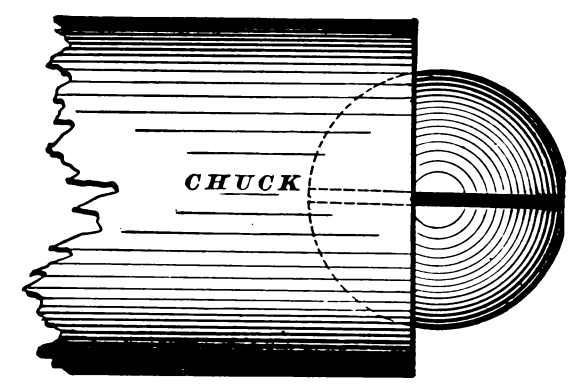

Fig. 1259.

finished by chucking them in a chuck such as shown in Fig. 1258,* and a narrow band, shown in black in the figure, is scraped, bringing the ball to the proper diameter. The ball is then reversed in the chuck, as in Fig. 1259, and scraped by hand until the turning marks cross those denoted by the black band. The ball is then reversed, so that the remaining part of the black band that is within the chuck in Fig. 1259 may be scraped down, and when by successive chuckings of this kind the lightest of scrape marks cross and recross each other when the ball is reversed, it may be finished by the ball cutter, applied as shown in Fig 1252,

* From *The American Machinist*.

and finally ground to its seat with the red-burnt sand from the foundry, which is better than flour emery or other coarser cutting grinding material.

CUTTING CAMS IN THE LATHE.—Fig. 1260 represents an end view of cam to be produced, having four depressions alike in form and depth, and arranged equidistant round the circumference, which is concentric to the central bore. The body of a cam is first turned up true, and one of the depressions is filed in it to the required form and curvature. On its end face there is then drilled the four holes, A, B, C, D, Fig. 1261, these being equidistant from the bore E. A similar piece is then turned up in the lathe, and in its end is fitted a pin of a diameter to fit the holes A, B, &c., it being an equal distance from bore E. These two pieces are then placed together, or rather side by side, on an arbor or man-

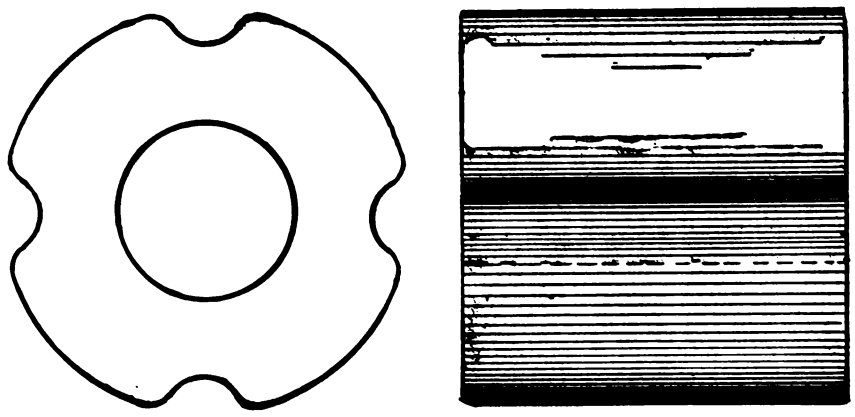

Fig. 1260.

drel, with the pin of the one fitting into one of the holes, as A. Two tool posts are then placed in position, one carrying a dull-pointed tool or tracer, and the other a cutting tool. The dull-pointed tracer is set to bear against the cam shown in Fig. 1262, while the cutting tool is set to take a cut off the blank cam piece. The cross feed screw of the lathe is disengaged, and a weight W, Fig. 1262, attached to the slider to pull the tracer into contact with the cam F. As a result, the slide rest is caused to advance to and recede from the line of lathe centres when the cam depression passes the tracer point, the weight W maintaining contact between the two. Successive cuts are taken until the tool cuts a depression of the required depth. To produce a second cam groove, the piece is moved on the mandrel so that the pin will fall into a second hole (as, say, B, Fig. 1261), when, by a repetition of the lathe operation, another groove is turned. The

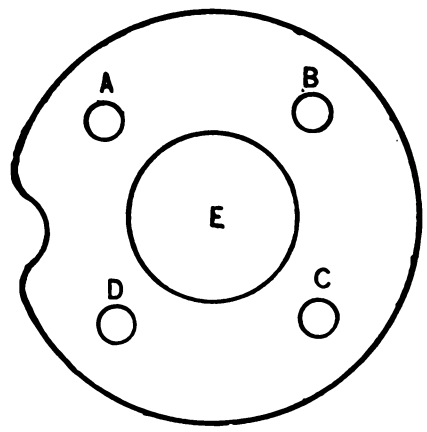

Fig. 1261.

whole four grooves being produced by the same means, they must necessarily be alike in form, the depths being equal, provided a finishing cut were taken over each without moving the cutting tool.

It will be observed that this can be done in any lathe having a slide rest, and that the grooves cut in one piece will be an exact duplicate of that in the other, or guide groove, save such variation as may occur from the thickness of the tracer point, which may be allowed for in forming the guide or originating groove. From the wear, however, of the tracer point, and from having to move the cutting tool to take successive depths of cut, this method would be undesirable for continuous use, though it would serve excellently for producing a single cam. An arrangement for continuous use is shown in Fig 1263, applied to a lathe having a feed spindle at its back, with a cam G upon it. This cam G may be supposed to have been produced by the method already described. A tracer point H, or a small roller, may be attached to the end of the slide-rest and held against G by the weight W, which may be within the lathe shears if they have no cross girts, as in the case of weighted lathes. The slide-rest may be arranged to have an end motion slightly exceeding the motion, caused by the cam, of the tracer H. Change gears may then be used to cause the cam G to make one rotation per lathe rotation, cutting four recesses in the work; or by varying

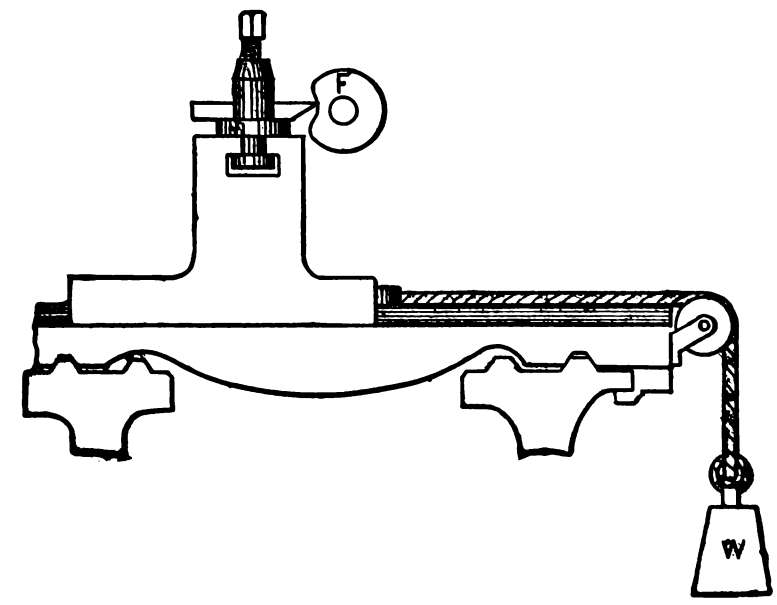

Fig. 1262.

the rotations of G per lathe rotation, the number of recesses cut by the tool T may be varied. Successive depths of cut may then be put on by operating the feed screw in the ordinary manner. In this arrangement the depth and form of groove cut upon the work will correspond to the form of groove upon the cam-roller G; or each groove upon G being of a different character, those cut on the work will correspond. The wear on the cross slide will, in this case, be considerable, however, in consequence of the continuous motion of the tool-carrying slider, and to prevent this another arrangement may be used, it being shown in Fig. 1264 as applied to a weighted and elevating slide rest. The elevating part of the slide rest is here pivoted to the lathe carriage at I, the weight W preventing play (from the wear) at I. A bracket J

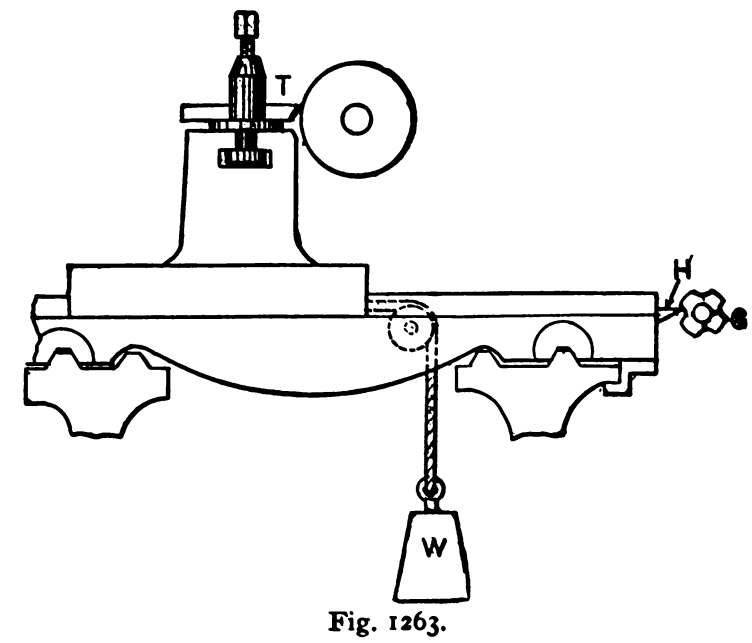

Fig. 1263.

is shown fast to the elevating slide of the rest, carrying a roller meeting the actuating cam G. In this arrangement the cut may be put on by the feed screw traversing the slider in the usual manner, or the elevating screw K may be operated, causing the roller at the end of J to gradually descend as each cut is put on into more continuous contact with G as the latter rotates. The form of groove cut by the tool does not, in this case, correspond to the form on G, because the tool lifts and falls in the arc of a circle of which pivot I is the centre of motion, and its radius from I being less than the radius of G, its motion is less. But in

addition to this the direction of its motion is not that of advancing and receding directly toward and away from the line of lathe centres, and the cam action is reduced by both these causes.

The location of pivot I is of considerable importance, since the nearer it is to the line of centres the less the action of the cam G is reduced upon the work. As this is not at first sight apparent, a few words may be said in explanation of it. It is obvious that the farther the pivot I is from the tool point the greater will be the amount of motion of the tool point, but this motion is not in a direction to produce the greatest amount of effect upon the work,

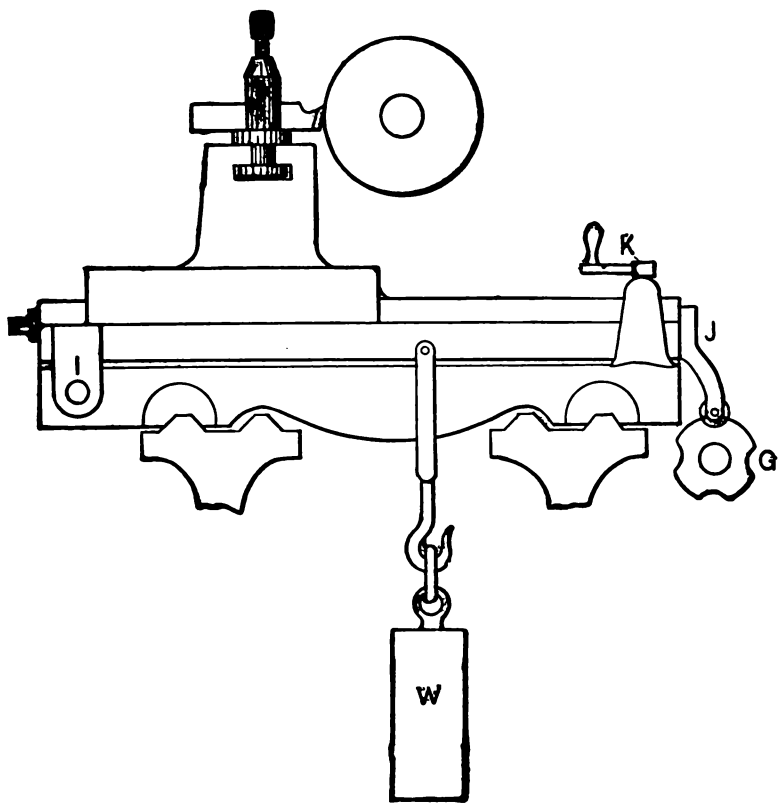

Fig. 1264.

as is demonstrated in Fig. 1265; referring to which, suppose line A B C to represent a lever pivoted at B, and that end A be lifted so that the lever assumes the position denoted by the dotted lines D and E, then the end of C will have moved from circle F to circle G, as denoted by arc H; arm C of the lever being one-half the length of arm A B, and from circle F to circle G, measured along the line H, being one-half the distance between A and the end of the line D, the difference in the diameters of circles F and G will represent the effect of the cam motion on the tool under these conditions. Now, suppose A J is a lever pivoted at K, and that end A is raised to the dotted line D, then arm J, being one-half the length of A K, will move half as much as end A, and will assume the position denoted by dotted line L, and the difference in the diameter of circles F and M will represent the cam motion upon the tool motion under these conditions. From this

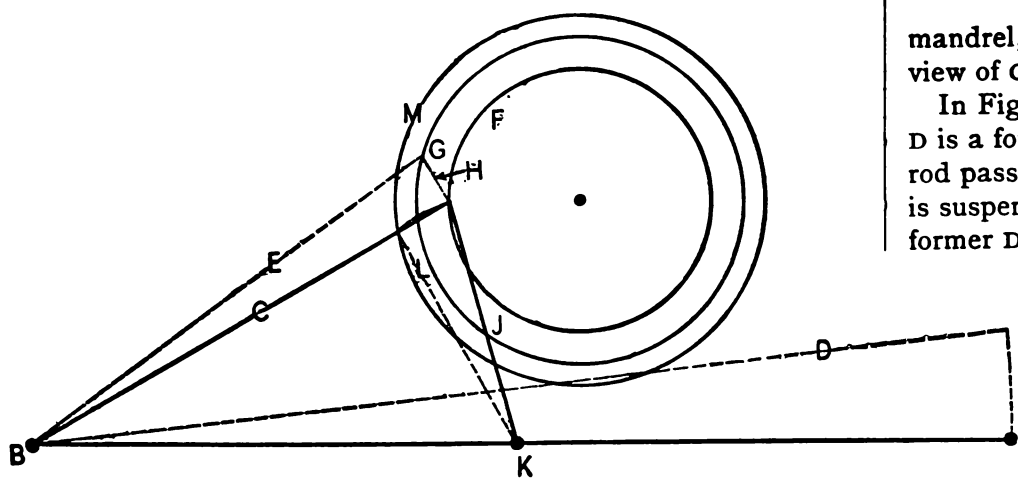

Fig. 1265.

it appears that the more nearly vertical beneath the tool point the pivoted point is, the greater the effect produced by a given amount of cam motion. On this account, as well as on account of the direction of motion, the shape of the actuating cam may be more nearly that of the form required to be produced in proportion as the pivoted centre falls directly beneath the tool point. But, on the other hand, the wear of the pivot, if directly beneath the tool point, would cause more unsteadiness to the tool; hence it is desirable that it be somewhere between points K and B, the location being so made that (B representing the pivoted point of the rest) the line B C forms an angle of 50° with the line B A. It is obvious that when the work is to be cam-grooved on a radial

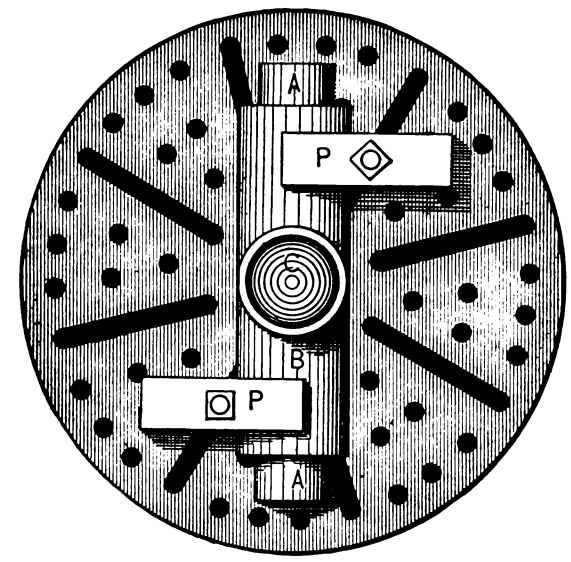

Fig. 1266

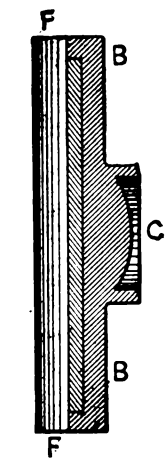

Fig. 1267.

face the pivoted design is unsuitable, and either that in Fig. 1262 or 1263 is suitable.

Similar cam motions may be given to the cross feed of a lathe: thus, the Lane and Bodley Company of Cincinnati, Ohio, employ the following method for turning the spherical surfaces of their swiveling bearings for line shafting.

The half bearing B, Fig. 1266, is chucked upon a half-round

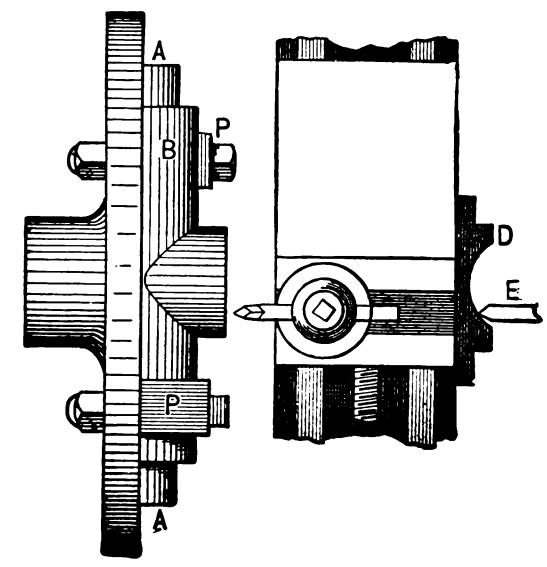

Fig. 1268.

mandrel, C being the spherical surface to be turned, a sectional view of C being shown in Fig. 1267.

In Fig. 1268 is a plan view of the chuck, work, and lathe rest; D is a former attachment bolted to the slider of the rest, and E a rod passing through the lathe block. The weight W, Fig. 1269, is suspended by a cord attached to the slide rest so as to keep the former D firmly against the end of E.

As the slider is operated, the rest is caused by E to slide upon the lathe bed, and the cutting tool forms a spherical curve corresponding to the curve on the former D. The weight W of course lifts or falls according to the direction of motion of the slider.

The cut is put on by operating handle G, thus causing E to advance.

The weight W causes any play between the slider and the cross slide to be taken up in the same direction as the tool pressure would take it up, hence the cut taken is a very smooth one. The half-round mandrel being fixed to the lathe face plate will remain true, obviating the liability of the centre of the spherical surface being out of line with the axis of the bearing-bore.

A method of producing cams without a lathe especially adopted

for the purpose is shown in Figs. 1270 and 1272, which are extracted from *Mechanics*. The apparatus consists of a frame E, which fits on the cross ways of an ordinary lathe. The cross-feed screw is removed, so that E may slide backwards and forthwards freely. The frame E carries the worm-wheel A and the worm-gear B, which is operated by the crank F. The cam C to be cut is bolted on to the face of the worm-wheel, which faces the headstock of the lathe. The form for the cam, which may be made of sheet steel, or thicker material, according to the wear it is to have, is fastened to the face of the cam.

A cutter, like a fluted reamer, such as is shown in Fig. 1271, is then put in the live centre of the lathe. Care must be taken that the shank is the same size as the fluted part, and that the flutes are not cut up farther than the thickness that the cam grooves are to be cut in the blank. Having attached a cord to the back of E, pass it over a pulley H, fastened on the rear of the lathe, and

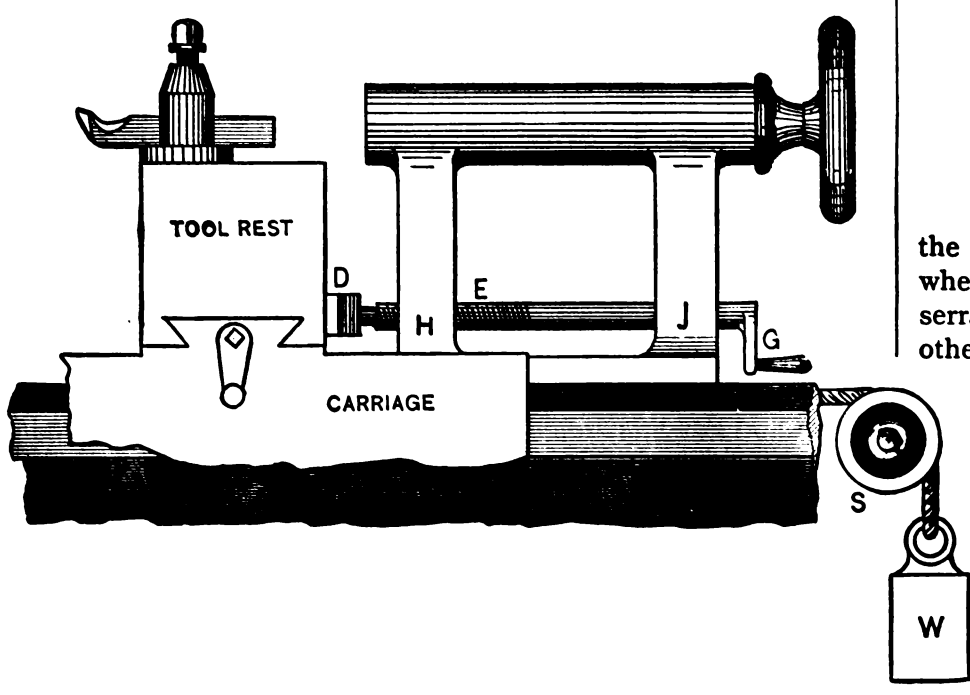

Fig. 1269.

hang on a weight G. Fig. 1272 is an edge view of the device, looking from the back of the lathe. It shows the worm A, blank C, and former D all bolted together, while the cutter I is ready in its place on a line with the centre of the worm, and just at back of the former. The machine is operated by turning the crank F,

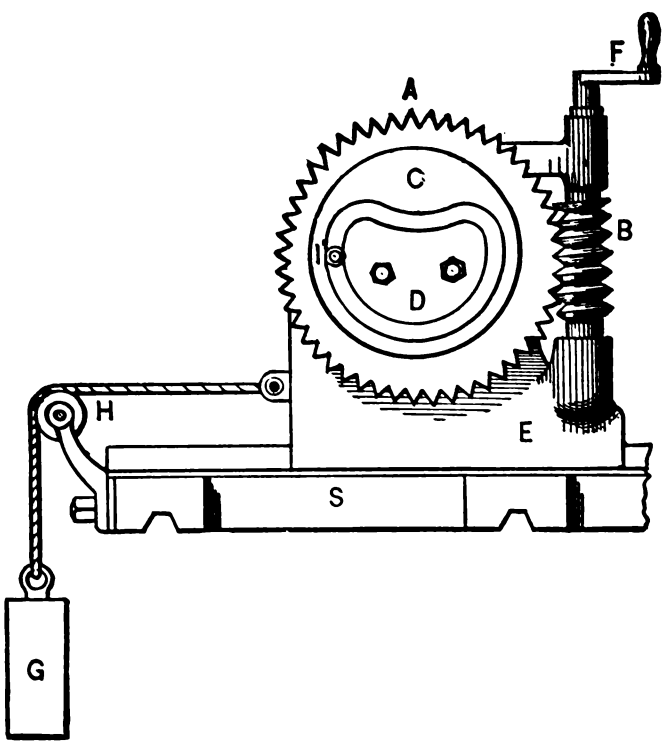

Fig. 1270.

which causes the worm A, also C and D, to revolve slowly, while the cutter I has a rather rapid rotation. The weight causes the cutter to be held firmly against the form F, and to follow its curves in and out.

KNURLING OR MILLING TOOLS.—In Fig. 1273 is shown the method of using the knurling tool in the slide rest of a lathe. It represents the tool at work producing the indentations which are employed to increase the hand grip of screw heads, or of cylindrical bodies, as shown in the figure by the crossed lines. Fig. 1274 is an end view of the tool, which consists of a holder to go in

Fig. 1271.

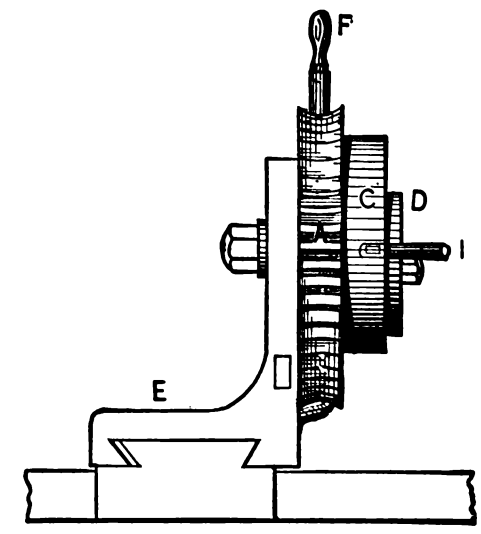

Fig. 1272.

the slide rest tool post, and carrying two small hardened steel wheels, each of which is serrated all round its circumference, the serrations of one being in an opposite direction to those of the other. The method of using the tool is shown in Fig. 1275, where it is represented operating upon a cylindrical piece of work. If the knurling is to be carried along the work to a greater length than the thickness of the knurl wheels, the lathe slide rest is slowly traversed the same as for a cutting tool.

As the knurling tool requires to be forced against the work with considerable pressure, there is induced a strain tending to force the tool directly away from the work, as denoted by the arrow in Fig. 1276, and this, in a weighted lathe, acts to raise the lathe carriage and weight. This is avoided by setting the tool at an angle, as in Fig. 1277, so that the direction of strain is below and not above the pivot on which the cross

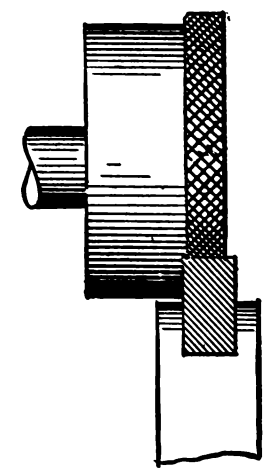

Fig. 1273.

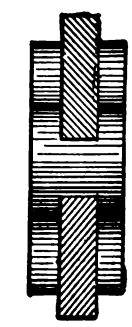

Fig. 1274.

slide rests. This is accomplished by pivoting the piece carrying the wheels to the main body of the stem, as shown in Fig. 1277.

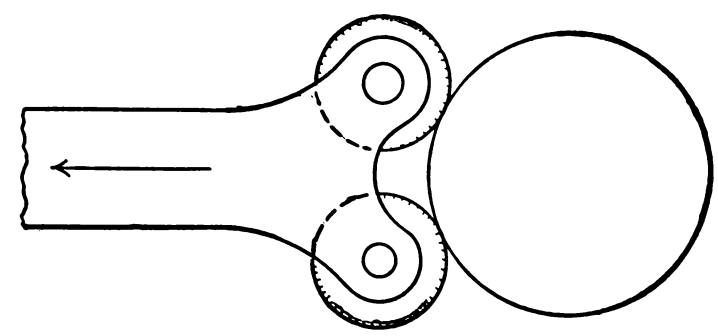

Fig. 1275.

For use by hand the knurling or milling tool is fitted to a holder and handle, as in Fig. 1278, and the hand tool rest is placed some

little distance from the work so that the knurl can pass over it, and below the centre of the work.

Knurls for screw heads are made convex, concave, or parallel, to fit the heads of the screws, and may be indented with various patterns.

WINDING SPIRAL SPRINGS IN THE LATHE.—Spiral springs whose coils are close, and which therefore act on distension only,

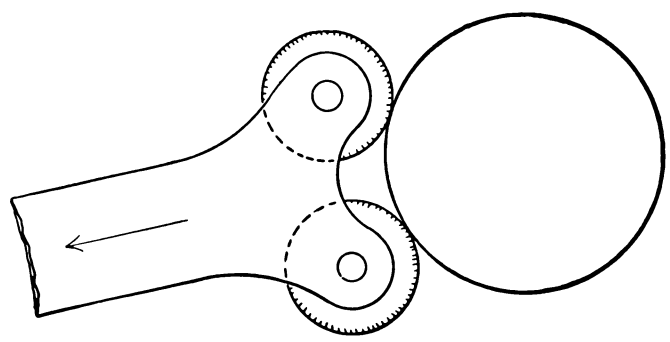

Fig. 1276.

may be wound by simply starting the first coil true, and keeping the wire as it winds on the mandrel close to that already wound thereon.

Spiral springs with open coils may be best wound as shown in Fig. 1279, in which is shown a mandrel held between the lathe

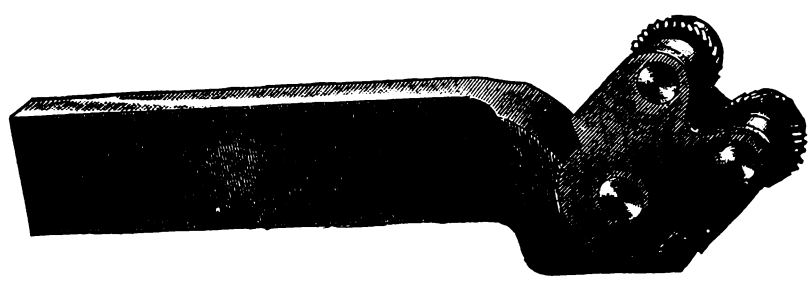

Fig. 1277.

centres and driven by a dog that also grips one end of the wire W, of which the spring is to be made. The wire is passed through two blocks B, which, by means of the set-screw in the lathe tool post, place a friction on it sufficient to place it under a slight tension which keeps it straight. The change gears of the lathe are arranged as they would be to cut a screw of a pitch equal to

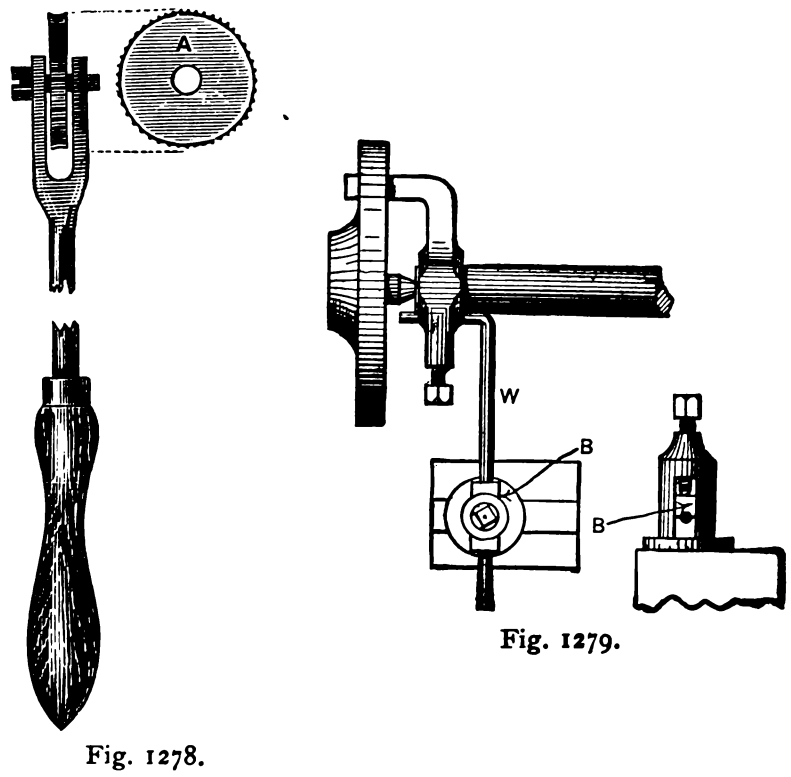

Fig. 1279.

Fig. 1278.

the thickness of the wire added to the space there is to be between the coils of the spring. The first turn of the lathe should wind a coil straight round the mandrel when the self-acting feed motion is put in operation and the winding proceeds, and when the spring is sufficiently long, the feed motion is disconnected, and the last coil is allowed to wind straight round the mandrel, thus giving each end of the spring a flat or level end.

If the wire is of brass it will be necessary to close it upon the mandrel with blows from a lead mallet to prevent it from uncoiling on the mandrel when the end is released, which it will do to some extent in any event.

If it is of steel it may be necessary to heat the coil red-hot to prevent its uncoiling, and in the coiling it will, if of stout wire, require to be bent against the mandrel during winding with a piece of steel placed in the tool post, as in Fig. 1280, in which A

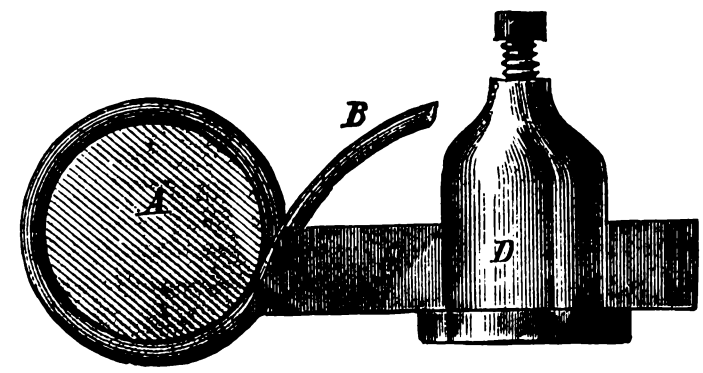

Fig. 1280.

represents the mandrel, B the spring wire, and D the lathe tool post.

In the absence of a lathe with a self-acting feed motion, the mandrel may have a spiral groove in it and the piece of steel or other hard metal shown in figure must be used, the feed screw of the slide rest being removed so that the wire can feed itself along as the mandrel rotates. Near one end of the mandrel a

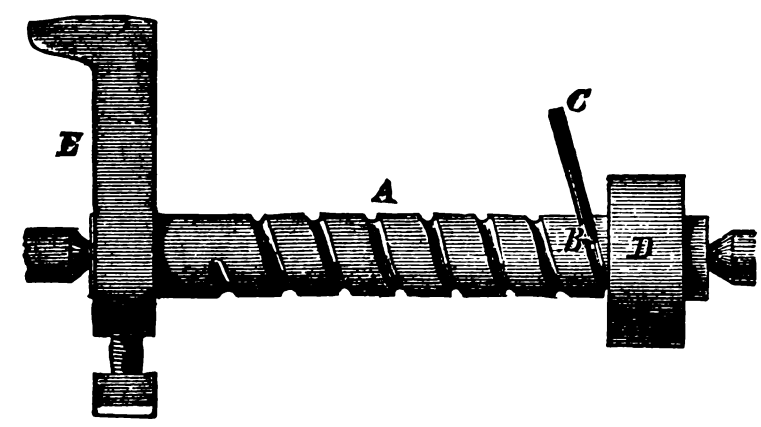

Fig. 1281.

small hole is drilled through, there being sufficient space between the hole and the end of the mandrel to admit of a loose washer being placed thereon; the bore of this washer requires to be rather larger in diameter than the outside diameter of the spring, when wound upon the mandrel, and also requires to be provided with a keyway and key. The washer D (Fig. 1281), is slipped over the mandrel, the end of the wire C is inserted in the hole B

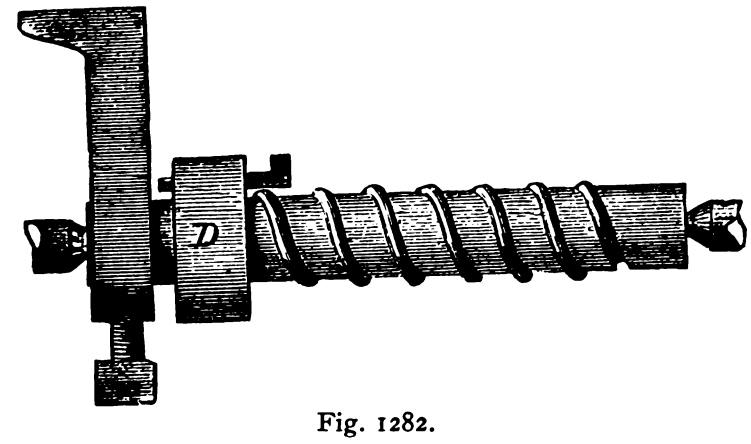

Fig. 1282.

and the spring being wound, the washer is passed up to the end, and the key driven home as in Fig. 1282; when the wire is cut off and the mandrel may be taken from the lathe with the spring closely wound round it to be hammered if of brass, and heated if of steel. The hammering should be done over the whole circumference, not promiscuously, but beginning at one end and following along the wire with the blows delivered not more than ¼ of an inch apart; for unless we do this we cannot maintain any definite

relation between the size of the mandrel and the size of the spring.

When a grooved mandrel is used, its diameter should be slightly less than the required diameter of spring, as when released the coils expand in diameter.

If it is not essential that the coils be exactly true, take a plain mandrel, such as shown in Fig. 1283, and a hook, such as shown at A, fasten the end of the wire either round the lathe dog, or in a hole in the mandrel as before, and wind one full coil of the spring upon the mandrel, then force this coil open until the hook end of A can be inserted between it and over the mandrel, the other end hanging down between the lathe shears, which will

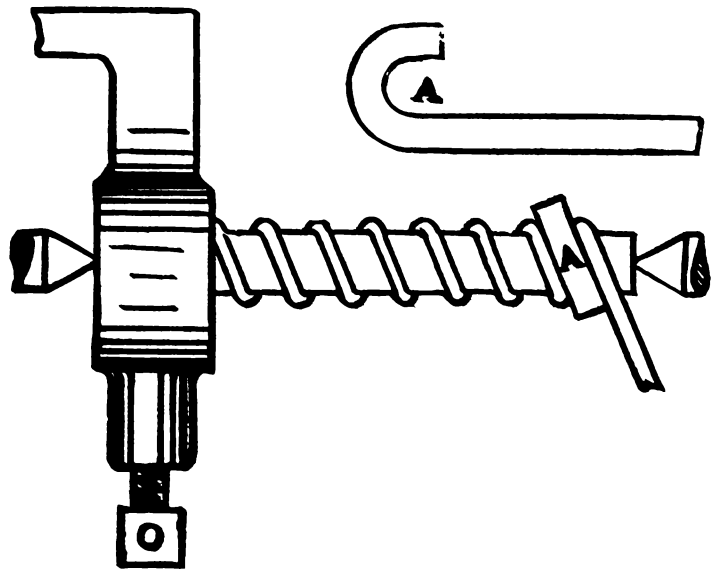

Fig. 1283.

prevent it from rotating, starting the lathe while holding the unwound end of the wire against the hook with a slight pressure, and the winding will proceed as shown in the figure, the thickness of A regulating the width apart of the coils. It is obvious that if the coil is to be a right-handed one and is started at the carrier end, the lathe must revolve backwards.

Spiral springs for railroad cars are wound while red-hot in special spring-winding lathes and with special appliances.

TOOLS FOR HAND TURNING.—Many of the tools formerly used in hand turning have become entirely obsolete, because they were suitable for larger work than any to which hand turning is now applied; hence, reference to such tools will be omitted, and only such hand tools will be treated of as are applicable to foot lathes and wood turning, their purposes being those for which hand tools are now used.

To the learner, practice with hand tools is especially advantageous, inasmuch as the strain due to the cut is felt by the

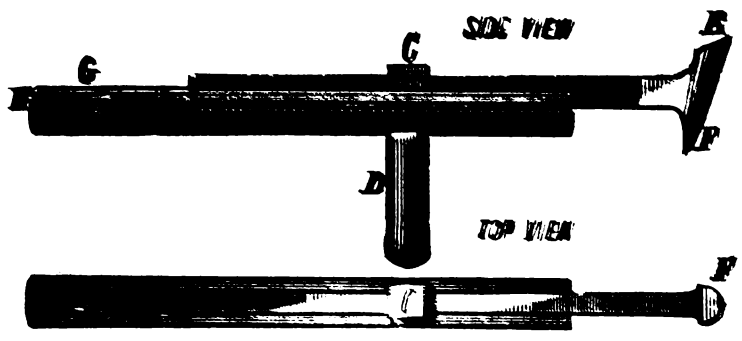

Fig. 1284.

operator; hence, the effects of alterations in the shape of the tools, its height or position with relation to the work, and also the resistance of the metal to severance, are more readily understood and appreciated than is the case where the tool is held in a slide rest or other mechanical device. If under certain conditions the hand tool does not operate to advantage, these conditions may be varied by a simple movement of the hands, altering the height of the tool to the work, the angle of the cutting edges to the work, or the rate of feed, as the case may be, and instantly perceiving the effects; whereas with tools held by mechanical means, such alterations would involve the expenditure of considerable time in loosening, packing, and fastening the tool, and adjusting it to position.

Small work that is turned by hand may, under exceptionally expert manipulation, be made as interchangeable and more accurate in dimensions than it could be turned by tools operated in special machines. That is to say, it is possible to turn by hand a number of similar small pieces that will be when finished as true, more nearly corresponding in dimensions, and have a finer finish, than it is practicable to obtain with tools operated or guided by parts of a machine. This occurs because of the wear of the cutting tools, which upon small work may be compensated for in the hand manipulation in cases where it could not be in machine manipulation. But with ordinary skill, and under ordinary conditions, the liability to error in hand work induces greater variation in the work than is due to the wear of the tool cutting edges in special machine work; hence, the practical result is that work made by special machinery is more uniform and true to size and shape than that made by hand, while also the quantity turned out by special machines is very much greater.

The most desirable form of tool for taking a heavy hand cut is the heel tool shown in Fig. 1284, which, it may be remarked, is at present but little used on account of the greater expedition of tools held in slide rests. It consists of a steel bar, about $\frac{3}{4}$ or $\frac{1}{2}$ inch square, forged with a heel at F, so that it may firmly grip the hand rest, and having a cutting edge at E. This bar is about 8 inches long, and is held in a groove in a wooden stock by a strap passing over it, and having a stem which passes down through the handle D, in which is fixed a nut, so that by screwing up or unscrewing D the bar is gripped or released, as the case may be, in a groove in the stock. In use, the end H of the stock is held firmly against the operator's shoulder, the left hand grasps the stock and presses the tool firmly down upon the face of the hand rest, while with the right the handle D is moved laterally, causing

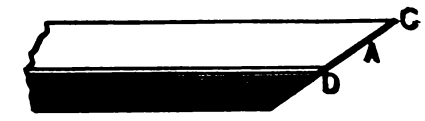

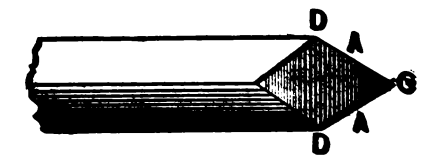

Fig. 1285.

the tool to move to its cut. The depth of the cut is put on and regulated by elevating the end H of the stock. The heel F is placed close enough to the work to keep E F nearly vertical, for if it inclines too much in any direction the tool gets beyond the operator's control. The position of the heel F is moved from time to time along the hand rest to carry the cut along.

A cut of $\frac{1}{8}$ inch deep, that is, reducing the work diameter $\frac{1}{4}$ inch, may readily be taken with this tool, which, however, requires skilful handling to prevent it from digging into the work.

The shorter the distance from the face E to the heel F the more easily the tool can be controlled; hence, as F serves simply as a sharp and gripping fulcrum it need not project much from the body of the steel; indeed, in many cases it is omitted altogether, the bottom of the steel bar being slightly hollowed out instead. No oil or water is required with the heel tool.

The hand rest should be so adjusted for height that the cutting edge of the tool stands slightly above the horizontal level of the work, a rule which obtains with all hand tools used upon wrought iron and steel.

The graver is the most useful of all hand turning tools, since it is applicable to all metals, and for finishing as well as roughing out the work. It is formed by a square piece of steel whose end is ground at an angle, as shown in the top and the bottom view Fig. 1285, A A being the cutting edges, C C the points, and D D the heels.

It is held in a wooden handle, which should be long enough to grasp in both hands, so that the tool may be held firmly. For cutting off a maximum of metal in roughing out the work the graver is held as in Fig. 1286, the heel being pressed down firmly

upon the tool rest. The cut is carried along the work by revolving the handle upon its axis, and from the right towards the left, at the same time that the handle is moved bodily from the left towards the right. By this combination of the two movements, if properly performed, the point of the graver will move in a line parallel to the centres of the lathe, because, while the twisting of the graver handle causes the graver point to move away from the centre of the diameter of the work, the moving of the handle bodily from left to right causes the point of the graver to approach

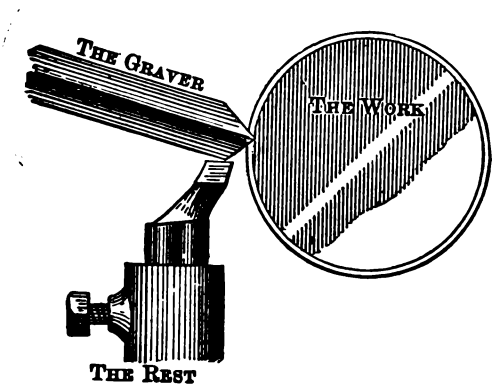

Fig. 1286.

the centre of that diameter; hence the one movement counteracts the other, producing a parallel movement, and at the same time enables the graver point to follow up the cut, using the heel as a pivotal fulcrum, and hence obviating the necessity of an inconveniently frequent moving of the heel of the tool along the rest. The most desirable range of these two movements will be very readily observed by the operator, because an excess in either of them destroys the efficacy of the heel of the graver as a fulcrum,

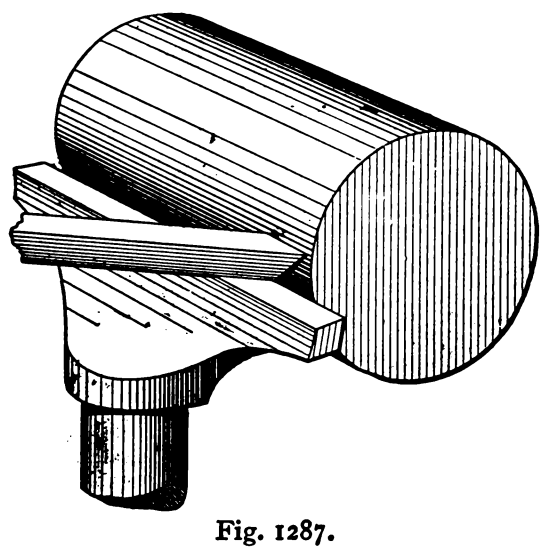

Fig. 1287.

and gives it less power to cut, and the operator has less control over the tool.

For finishing or smoothing the work the graver is held as in Fig. 1287, the edge being brought parallel to the work surface. For brass work the top faces of the graver should be slightly bevelled in the direction shown in Fig. 1288.

The graver cuts most efficiently with the work revolving at a fast speed, or, say, at about 60 feet per minute, and for finishing wrought iron or steel requires an application of water.

To finish work that has been operated upon by a heel tool or

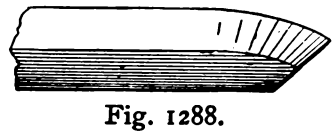

Fig. 1288.

by a graver, the finishing tool shown in Fig. 1289 may be employed. It is usually made about $\frac{5}{8}$ or $\frac{3}{4}$ inch wide, as the graver is employed for shorter work. It is ground so as not to let the extreme corners cut, and is used at a slow speed with water. The edge of this tool is sometimes oilstoned, causing it to cut with a clean polish. The tool is held level, brought up to the work, and a cut put on by elevating the handle end. To carry the cut forward, the tool is moved along the hand rest to nearly the amount of its width, and is brought to its cut by elevating the handle as before. When the work has been finished as near as may be with this tool, it may be finished by fine filing, the lathe running at its quickest speed; or the file may be used to show the high spots while using the finishing tool.

For facing the ends of work the tool shown in Fig. 1290, or that shown in Fig. 1291, may be used, either of them being made from an old three-cornered file. The cutting edge at A, Fig. 1290,

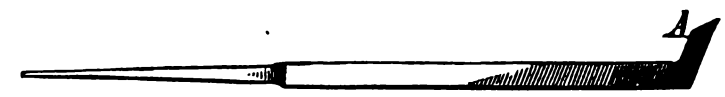

Fig. 1289.

should be slightly curved, as shown, The point of the tool is usually brought to cut at the smallest diameter of the work, with the handle end of the tool somewhat elevated. As the cut is carried outwards the handle end of the tool is depressed, and the point correspondingly elevated. It may be used dry or with water, but the latter is necessary for finishing purposes.

Another form of this tool is shown in Fig. 1291. It has two

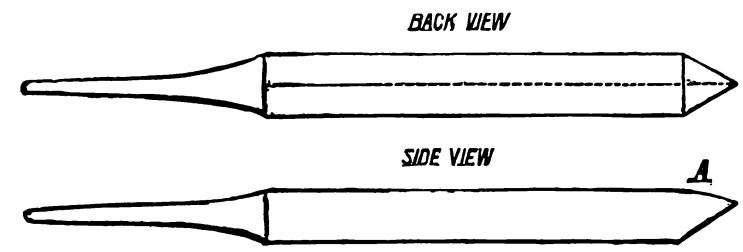

Fig. 1290.

cutting edges A A, one of which rests on the hand rest while the other is cutting, the tool being shown in position for cutting a right and a left-hand face, the face nearest to the work being shown in the lower view. This face should be placed against the radial face of the work, and the cut put on by turning the upper edge over towards the work while pressing the tool firmly to the lathe rest.

For cutting out a round corner the tool shown in Fig. 1292,

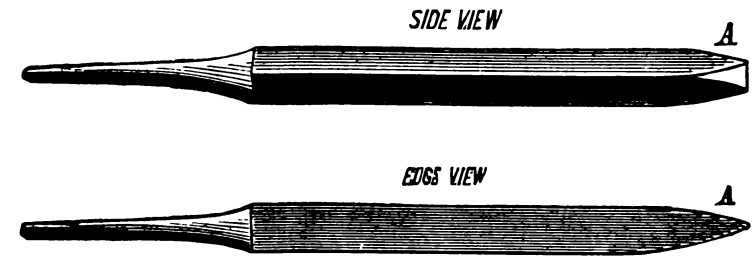

Fig. 1291.

employed either for roughing or smoothing purposes (water being used with it for the latter), the heel causes it to grip the hand rest firmly, and acts as a pivotal fulcrum from which the tool may be swept right and left round the curve, or a portion of it.

This tool, as in the case of all tools used upon wrought iron or steel, should not cut all round its edge simultaneously, as in that case, unless indeed it is a very narrow tool, the force placed upon it by the cut will be too great to enable the operator to hold and

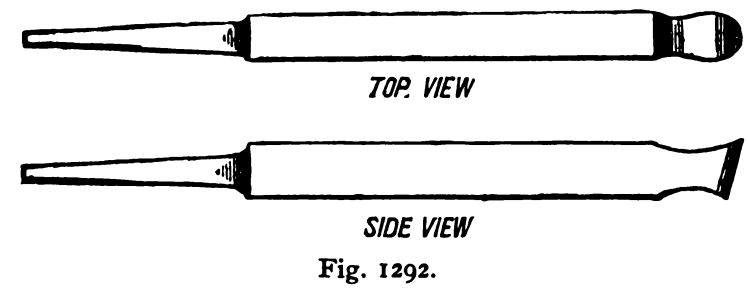

Fig. 1292.

control it; hence the cut should be carried first on one side and then on the other, and then at the point, or else the handle end should be moved laterally, so that the point sweeps round the work. It should be brought to its cut by placing its heel close to the work, and elevating the handle end until the cutting edge meets the work.

The point or nose of the tool may obviously be made straight or square, as it is termed, to suit the work, the top rake being omitted for brass work.

In using this tool for cutting a groove it is better (if it be a deep groove, and imperative if it be a broad one, especially if the work be slight and apt to spring) to use a grooving tool narrower in width than the groove it is to cut, the process being shown in Fig. 1293, in which W represents a piece of work requiring the two grooves at A and B cut in it. For a narrow groove as A the tool is made about half as wide as the groove, and a cut is taken first on one side as at C, and then on the other as at D. For a wider

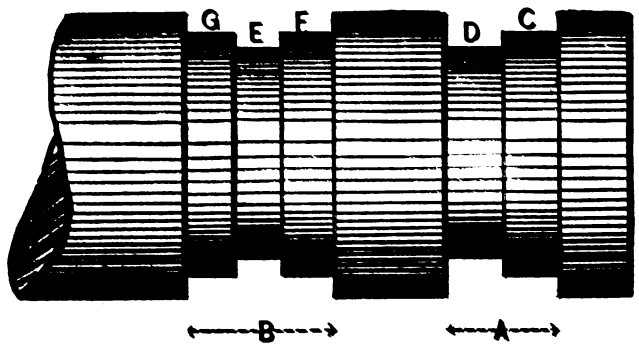

Fig. 1293.

groove three or more cuts may be made, as at E, F, G. In all cases the tool while sinking the groove is allowed to cut on the end face only; but when the groove is cut to depth, the side edges of the tool may be used to finish the sides of the groove, but the side and end edge must not cut simultaneously, or the tool will be liable to rip into the work.

HAND TOOLS FOR BRASS WORK.—In addition to the graver as a roughing-out tool for brass work, we have the tool shown in Fig. 1294, the cutting edge being at the rounded end A. It is held firmly to the rest, which is not placed close to the work (as in

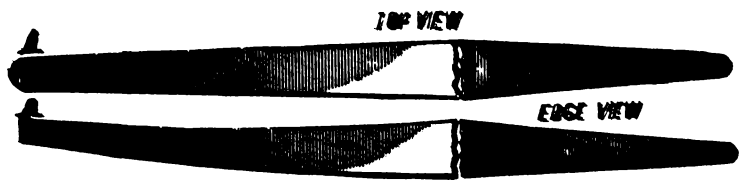

Fig. 1294.

the case of other tools), so as to give the tool a wide range of movement, and hence permit of the cut being carried farther along without moving its position on the rest. It may be used upon either internal or external work.

For finishing brass work, tools termed scrapers are employed.

Fig. 1295 represents a flat scraper, the two end edges A and the side edges along the bevel forming the cutting edges.

In this tool the thickness of the end A is of importance, since if it be too thin it will jar or chatter. This is especially liable to occur when a broad scraper is used, having a great length of

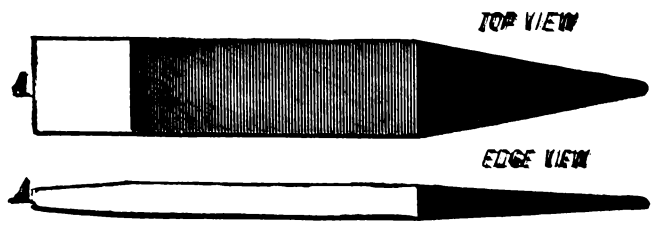

Fig. 1295.

cutting edge in operation. This may be obviated to some extent by inclining the scraper as in Fig. 1296, which has the same effect as giving the top face negative rake, causing the tool to scrape rather than cut. The dividing line between the cutting and scraping action of a tool is found in the depth of the cut, and the presentation of the tool to the work, as well as in the shape of the tool. Suppose, for example, that we have in Fig. 1297, a piece of work W and a tool S, and the cut being light will be a scraping one. Now suppose that the relative positions of the size of the work and of the tool remain the same, but that the cut be deepened as in Fig. 1298, and the scraping action is converted into that class of severing known as shearing, or we may reduce the depth of cut as in Fig. 1299, and the action will become a cutting one.

But let the depth of cut be what it may, the tool will cut and not scrape whenever the angle of its front face is more than 90° to the line of tool motion if the tool moves, or of work motion if the work

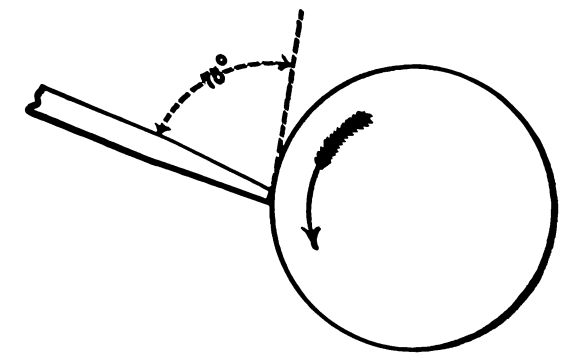

Fig. 1296.

moves to the cut. In Fig. 1300, for example, the tool is in position to cut the angle of the front face, being 110° to the direction of tool motion.

We may consider this question from another stand-point, however, inasmuch as that the tool action is a cutting one whenever the pressure of the cut is in a direction to force the tool deeper

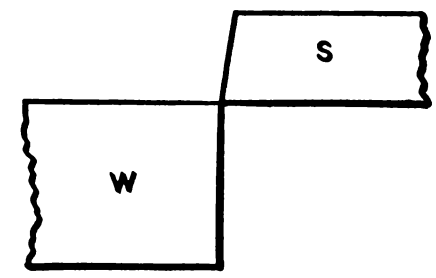

Fig. 1297.

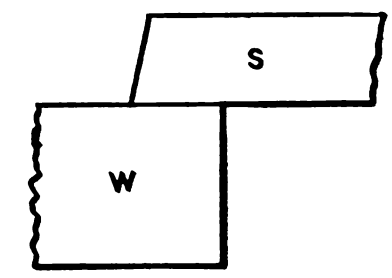

Fig. 1298.

into the work, and a scraping one whenever this pressure tends to force the tool away from the work, assuming of course that the tool has no front rake, and that the cut is light or a "mere scrape," as workmen say. This is illustrated in Fig. 1301, the tool at A acting to cut, and at B to scrape, and the pressure of the cut upon A acting to force the tool into the work as denoted by

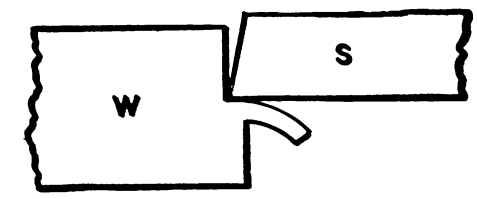

Fig. 1299.

the arrow D, while that upon B acts to force it in the direction of arrow C, or away from the work.

In addition to these distinctions between a cutting and a scraping action we have another, inasmuch as that if a tool is pulled or dragged to its cut its action partakes of a scraping one, no

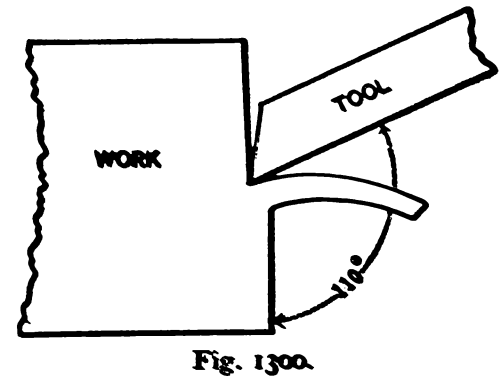

Fig. 1300.

matter at what angle its front face may stand with relation to the work.

The end face of a flat scraper should be at a right angle to the body of the tool, so that both edges may be equally keen, for if otherwise, as in Fig. 1302, one edge as A will be keener than the other and will be liable to jar or chatter.

The flat scraper can be applied to all surfaces having a straight outline, whether the work is parallel or taper, providing that there is no obstruction to prevent its application to the work.

Thus, in Fig. 1303 we have a piece of work taper at *a* and C,

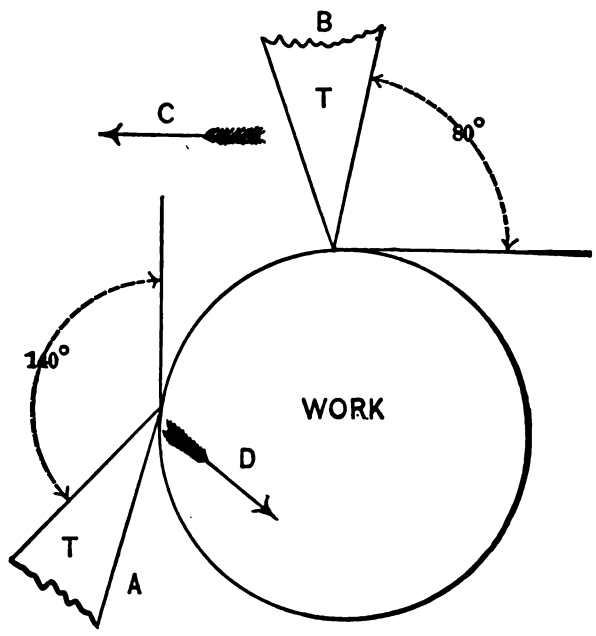

Fig. 1301.

parallel at *e*, and with a collar at *d*, the scraper S being shown applied to each of these sections, and it is obvious that it cannot be applied to section *a* because the collar *d* is in the way. This

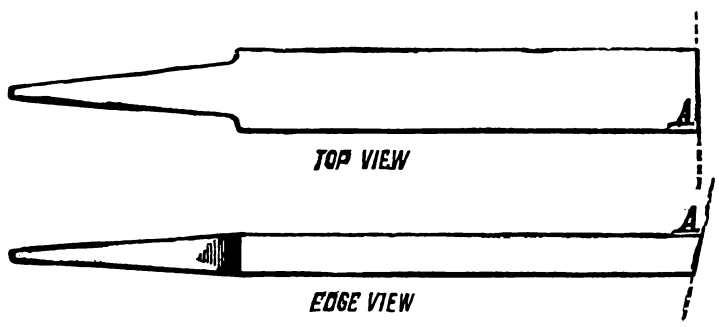

Fig. 1302.

is remedied by grinding the scraper as in Fig. 1304, enabling it to be applied to the work as in Fig. 1305. Another example of the use of a bevelled scraper is shown in Fig. 1306, the scraper S

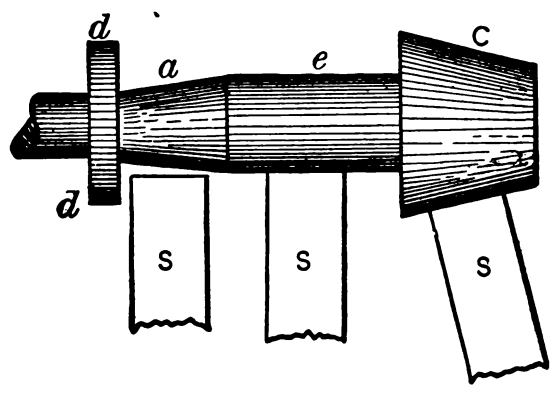

Fig. 1303.

having its cutting edge parallel to the work and well clear of the arm H.

The round-nosed scraper is used for rounding out hollow corners, or may be made to conform to any required curve or shape. It

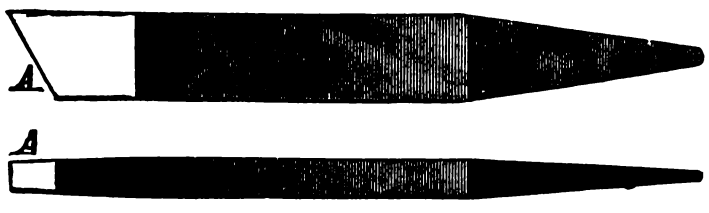

Fig. 1304.

is limited in capacity, however, by an element that affects all scraping tools, that if too great a length of cutting edge is brought into action at one time, chattering will ensue, and to prevent this the scraper is only made of the exact curvature of the work when it is very narrow, as at S in Fig. 1307.

For broad curves it is made of more curvature, so as to limit the length of cutting edge, as is shown in the same figure at S′, and is swept round the work so as to carry the cut around the curve.

There are, however, other means employed to prevent chattering,

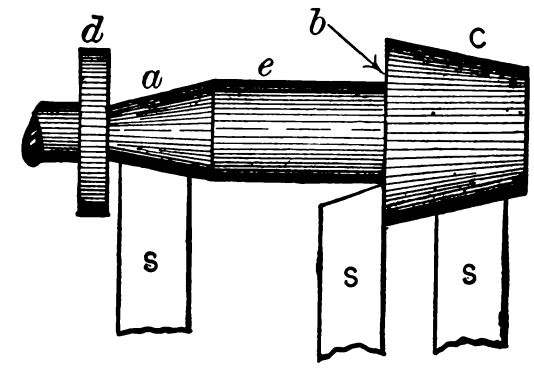

Fig. 1305.

and as these affect the flat scraper as well as the round-nosed one, they may as well be explained with reference to the flat one.

First, then, a thin scraper is liable to chatter, especially if used upon slight work. But the narrower the face on the end of the scraper, the easier it is to resharpen it on the oilstone, because there is less area to oilstone. A fair thickness is about $\frac{1}{20}$ inch;

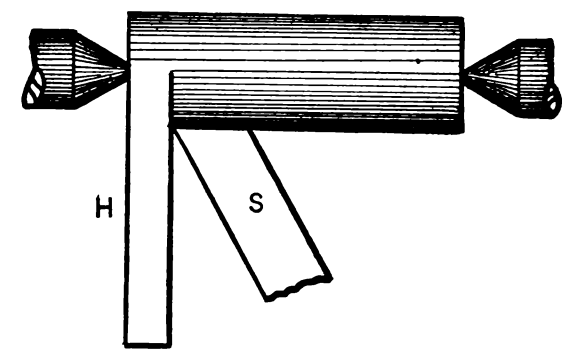

Fig. 1306.

but if the scraper was no thicker than this throughout its whole length, it would chatter violently, and it is for this reason that it is thinned at its cutting end only. Chattering is prevented in small and slight work by holding the scraper as in Fig. 1308, applying it to the top of the work; and to reduce the acting length of cutting edge, so as to still further avoid chattering, it is some-

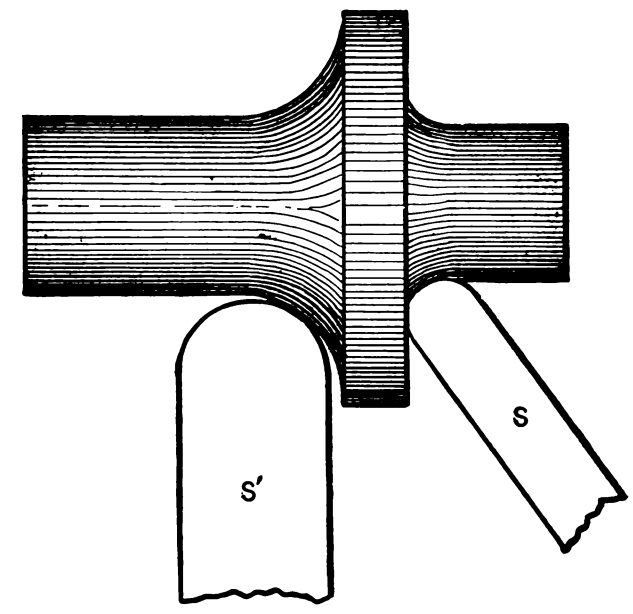

Fig. 1307.

times held at an angle as in the top view in Fig. 1309, S being the scraper and R the tool rest.

When the scraper is applied to side faces, or in other cases in which a great length of cutting edge is brought into action, a piece of leather laid beneath the scraper deadens the vibration and avoids chattering.

It is obvious that the scraper may be given any required shape to meet the work, Fig. 1310 representing a scraper of this kind; but it must in this case be fed endways only to its cut, if the work is to be cut to fit the scraper.

In Fig. 1311 is shown a half-round scraper, which is shown in

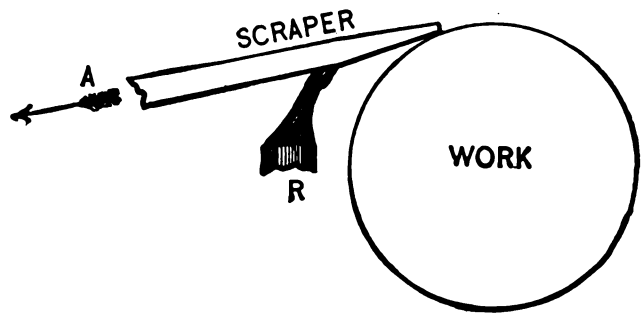

Fig. 1308.

Fig. 1312, in position to scrape out a bore or hole. This tool is made by grinding the flat face and the two edges of a worn-out half-round smooth file, and is used to ease out bores that fit too tightly. The cutting edges are carefully oilstoned, and the work revolved at a very quick feed.

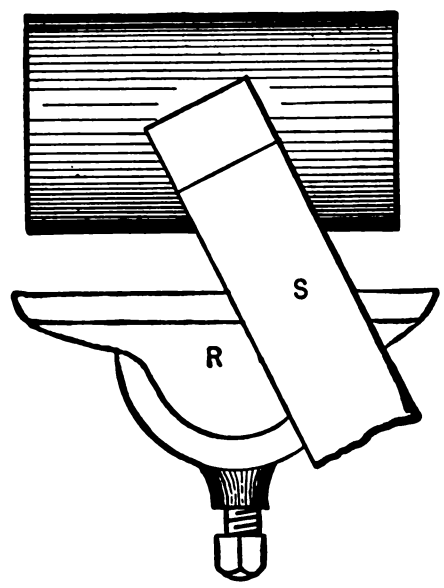

Fig. 1309.

A universal hand lathe constructed by Messrs. Brown & Sharpe is shown in Plate LXII.

The special tools and appliances used in connection with this lathe consist of a tool-stock or holder, the middle of which, denoted by A, is square, and contains three or four square slots, with a set-screw to each slot to hold different turning tools.

Each end of the stock is turned parallel, as denoted by B, C.

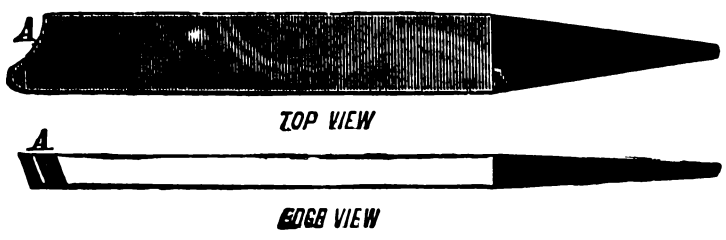

Fig. 1310.

In Figs. 1313 and 1314, D, E, and F are the tools, and G, H, are the set-screws.

Fig. 1315 represents the top and side views of a plate, of which there must be two, one to fasten on the headstock and one on the tailstock of the lathe, as shown in Fig. 1316.

In Fig. 1317 the manner of using the tool is shown, similar letters of reference denoting similar parts in all the figures.

The plates P, P, are bolted by screws to the headstock H and the tailstock T of the lathe. The tool-holder is placed so that the cylindrical ends B, C, rest on the ends of these plates, and in the angles P', P'. The cutting-tool D is sustained, as shown, upon the lathe-rest R.

In use, the operator holds the stock A in his hands, in the most convenient manner, using the tool E as a handle when there is a tool in the position of E. The cutting point of the tool is pressed up to the work W, and the feed is carried along by hand.

It is obvious, however, that when the perimeters of A, B, meet the shoulders O, O, Fig. 1315, of the plates P, P, the tool cannot approach any nearer to the diametrical centre of the work; hence the diameter to which the tool will turn is determined by the distance of the shoulder O of the plate P, from the centre of the lathe centres, as shown in Fig. 1316 by the line L.

In carrying the cut along it is also obvious that the lateral travel

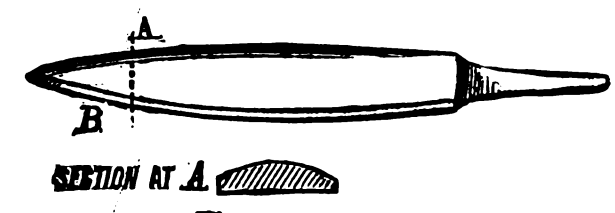

Fig. 1311.

of the stock or holder must end when the end of the square part A comes against the side face of either of the plates.

In the engraving we have shown the tool D cutting a groove in the work W, while the shoulder of the holder is against the plate fastened to the lathe tailstock T; and so long as the operator, in each case, keeps the shoulder against that plate, the grooves

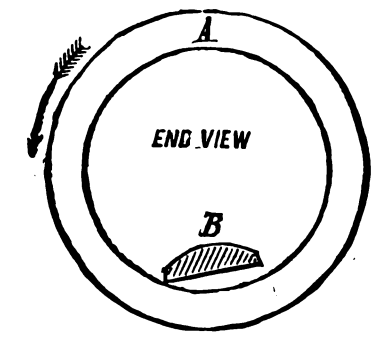

Fig. 1312.

upon each piece of work will be cut in the same position; for it will be observed that the position in the length of the work performed by each tool is determined by the distance of the cutting part of each tool from the end of the square part A of the tool-holder.

All that is necessary then is to adjust each tool so that it projects the proper distance to turn the requisite diameter, and stands

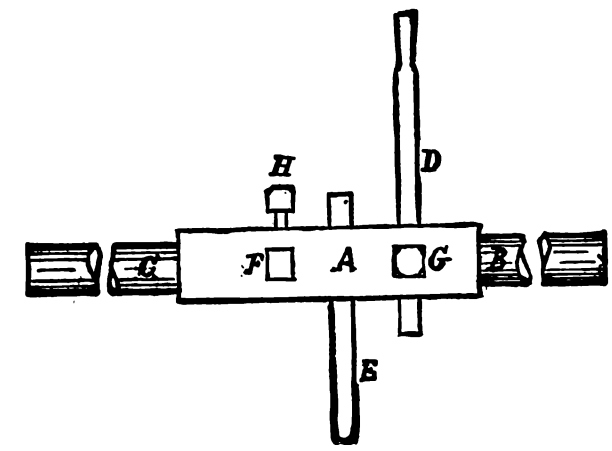

Fig. 1313.

the required distance from the shoulders of the square to cut to the desired length, and when once set error cannot occur.

This plain description of the device, however, does not convey an adequate idea of its importance. Suppose, for example, that it is required to turn a number of duplicate pieces, each with a certain taper; all that is necessary is to adjust the plates P in their distances from the lathe centres.

If the large end of the taper on the work is required to stand nearest the lathe headstock H, the plate P on the headstock must be moved until its shoulder O is farther from the lathe centre. If, however, the work requires to be made parallel, the plates P must be set the same distance for the axial line of the centres.

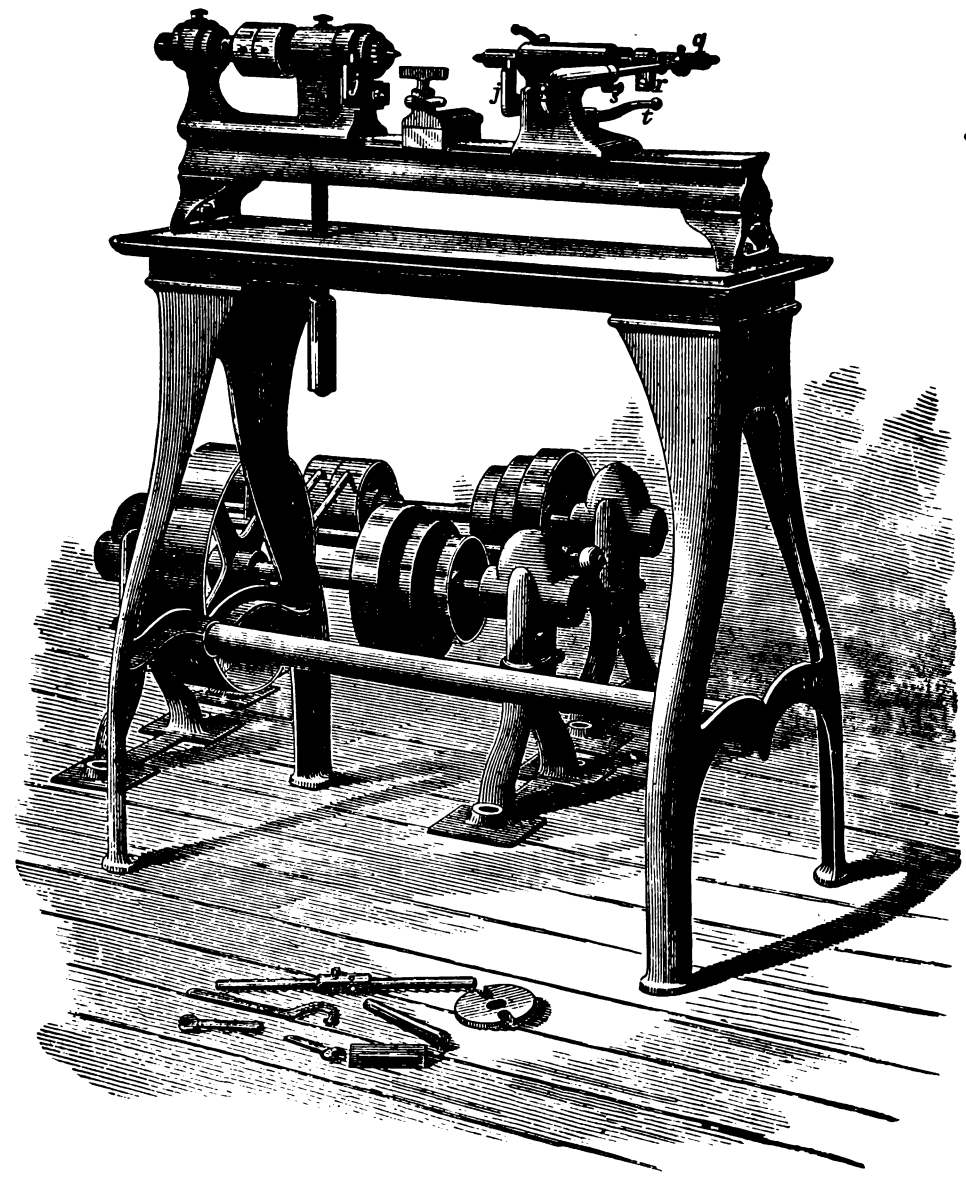

Fig. 1.

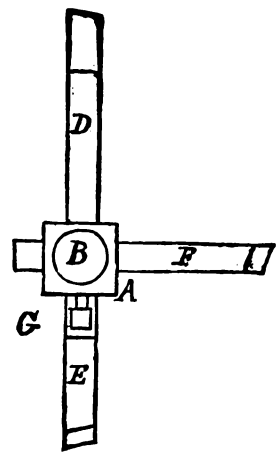

Fig. 1314.

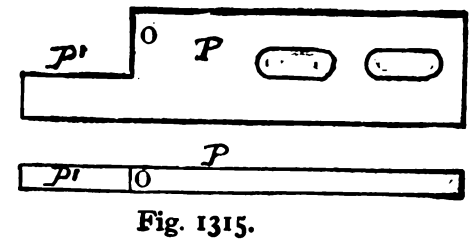

Fig. 1315.

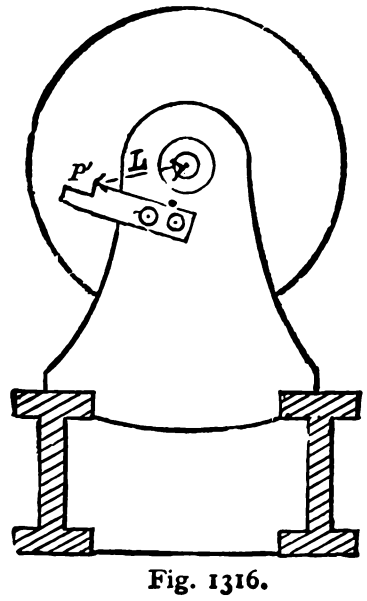

Fig. 1316.

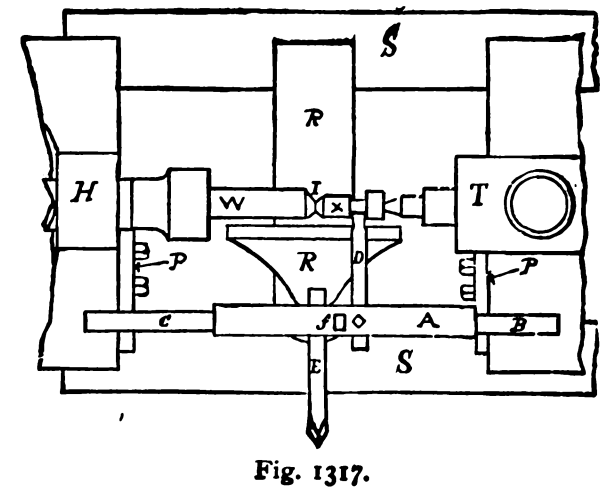

Fig. 1317.

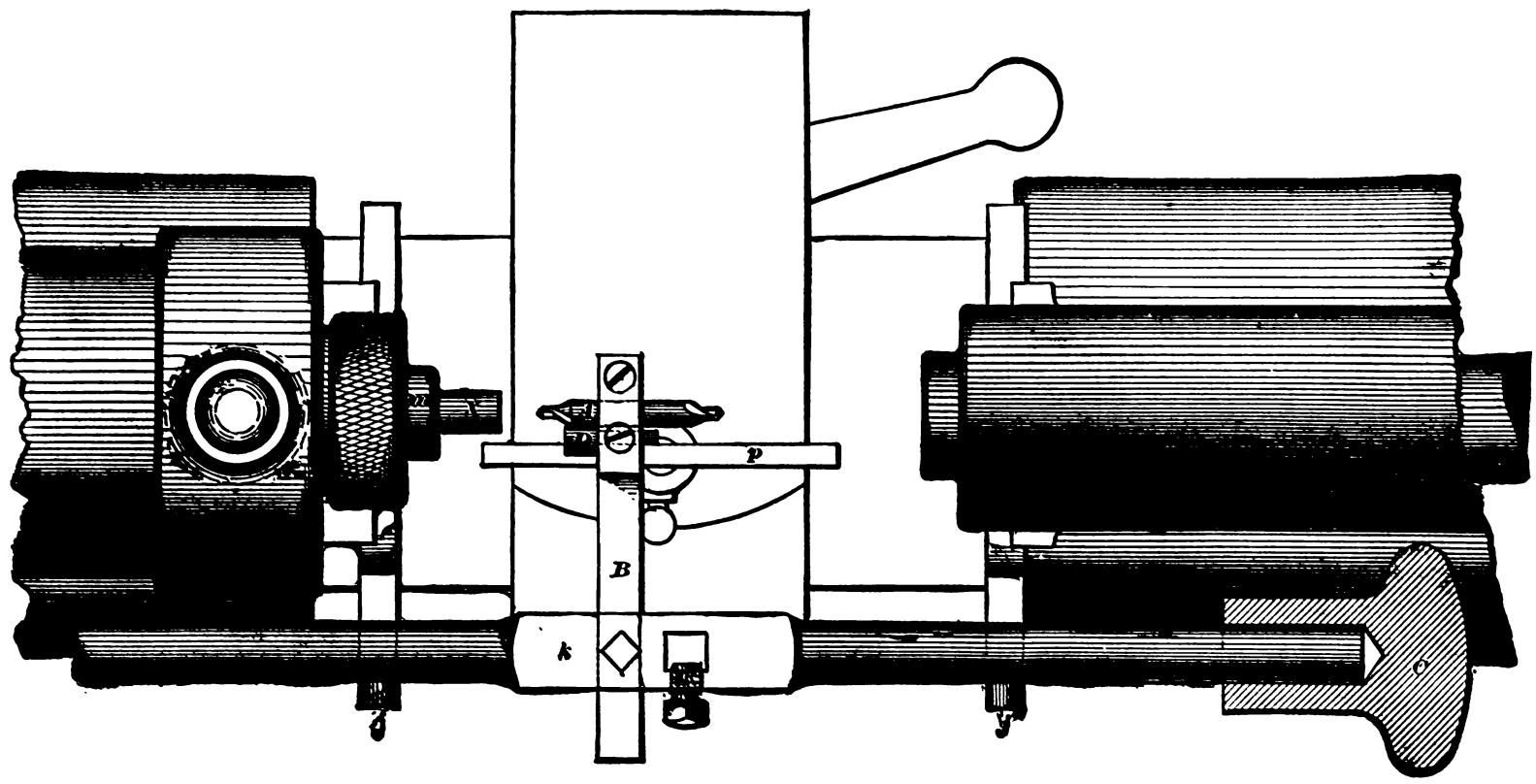

Fig. 1.

Fig. 2.

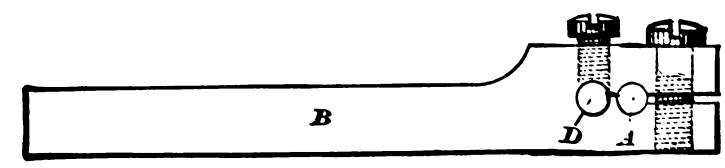

Fig. 3.

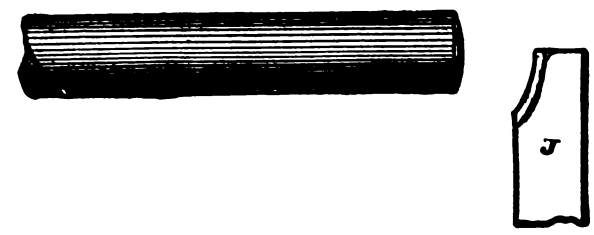

Fig. 6.

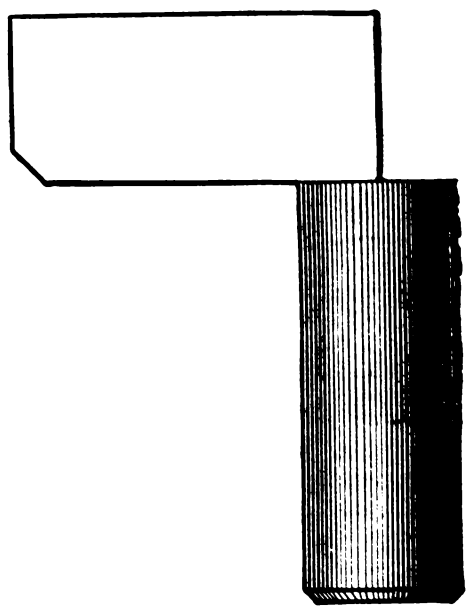

Fig. 4.

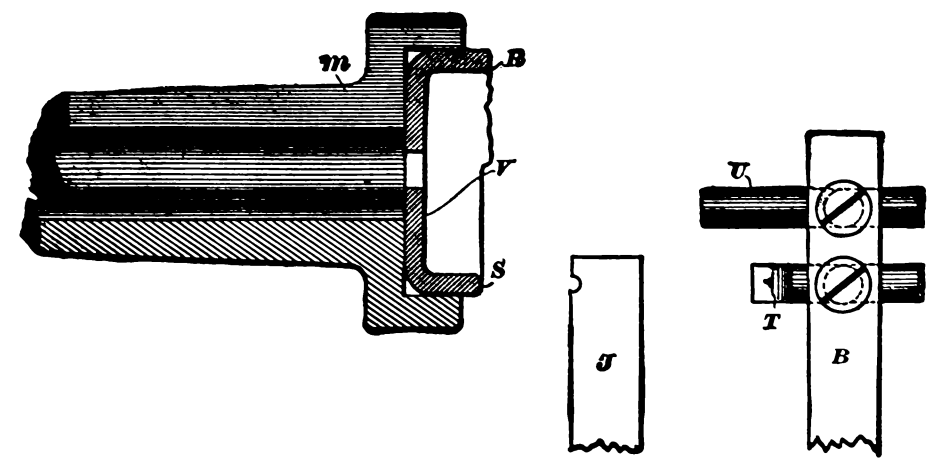

Fig. 5.

If it be desired to have a parallel and a taper in proximity upon the same piece of work, the tool-holder must have one of its cylindrical ends taper, and use it upon the taper part of the work.

In Fig. 1317 the tool D is shown cutting a square groove. The tool at *f* serves to turn the parallel part X, and the tool E would cut the V-shaped groove I.

All kinds of irregular work may be turned by varying the parallelism and form of the cylindrical ends B, C; but in this event the shoulders O, O, Fig. 1315, should be made V-shaped and hardened to prevent them from rapid wear.

Examples of the use of this most useful tool are thus given by its makers, the Brown & Sharpe Manufacturing Company.

Referring to Plate LXIII., Fig. 1 shows a method of centering

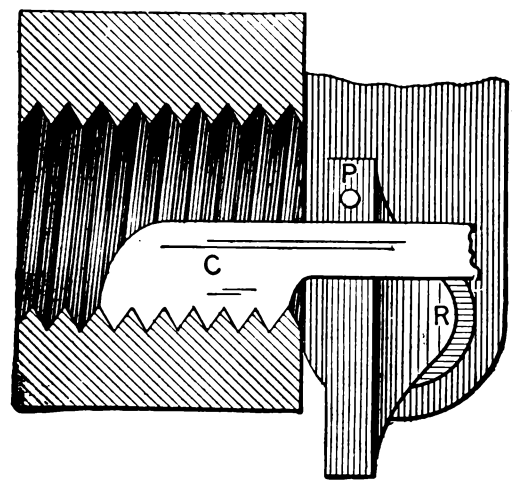

Fig. 1318.

needle-bars, foot-bars, shafts, &c., for sewing machine or similar work.

The drill A is fastened in the drill-holder B, which is secured in the tool-holder *k*. The tool-holder slides on the guides *j*, *j*, and the outer end of the drill-holder slides upon the tool-rest *p*. The shaft *x* to be centered is held in a shell chuck *m*, while the drill is pressed against it by hand, the palm bearing on a wooden cap C, which is slipped over the end of the tool-holder. The pin D in the drill-holder B serves as a stop in connection with the end of the shaft, and determines the depth of the hole.

An enlarged view of the drill, or more strictly of the drill and counter-sink A, is shown in Fig. 2.

Fig. 3 shows how the drill A and the stop-pin D are secured in the drill-holder.

When the shafts or other pieces to be centered are so long that

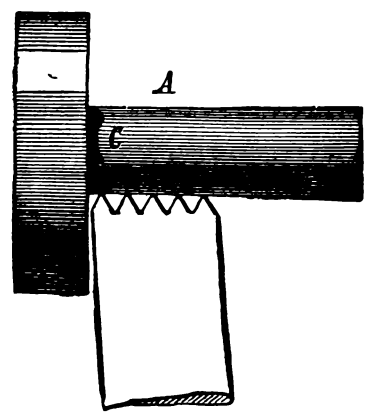

Fig. 1319.

the footstock interferes with their being put in or taken out of the chuck, the spindle is taken out and the shafts passed through the footstock.

Where there is a great deal of centering, it is not unfrequently of advantage to take the footstock off the bed of the lathe and use in its place a small fixture to support the guide *j*. We also sometimes use a half rest, Fig. 4, in place of the rest *p*, Fig. 1.

After the piece is centered, the tool-holder *k*, Fig. 1, is drawn back and the drill-holder B allowed to drop on the shank of the half rest.

The round finish on the ends of small shafts, pins, etc., Fig. 6, is made with similar arrangement of tools, but the tool J is put in the place of the drill-holder B, Fig. 1.

A method of finishing small caps is shown by Fig. 5.

These caps come to the hand lathe from the punch press in the form shown at R. The superfluous stock is removed by the tool T, and the edge S is rounded with a bead tool J. The pin U is a stop to regulate the depth of the cap by coming in contact with the inside surface V. The tools and pin are held in the tool-holder shown in Fig. 1, the tools being at right angles to each other. These caps are also bitted and countersunk in the hand lathe.

With special chucks and fixtures a very large variety of hand work may be done expeditiously and correctly with this lathe and its appurtenances.

SCREW CUTTING WITH HAND TOOLS.—Screw threads are cut by hand in the lathe with chasers, of which there are two kinds, the

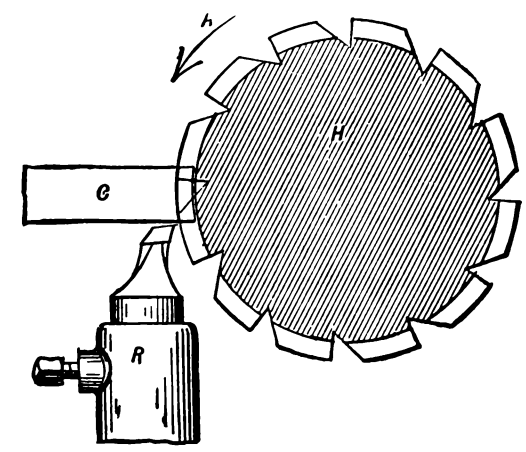

Fig. 1320.

outside and the inside chaser. In Fig. 1319 is shown an outside, or male, and in Fig. 1318, an inside, or female, chaser. The width of a chaser should be sufficient to give at least four teeth, and for the finer thread pitches it is better to have six or eight teeth, the number increasing as the pitch is finer, and the length of the work will permit. The leading tooth should be a full one, or otherwise it will break off, and if in cutting up the chaser a half or less than a full tooth is formed it should be ground off. The tooth-points should not be in a plane at a right angle to the chaser length, but slightly diagonal thereto, as in Fig. 1319, so that the front edge of the chaser will clear a bolt-head or shoulder, and permit the leading tooth to pass clear up to the head without fear of the front edge of the steel meeting the shoulder.

The method of producing a chaser from a hob is shown in Fig.

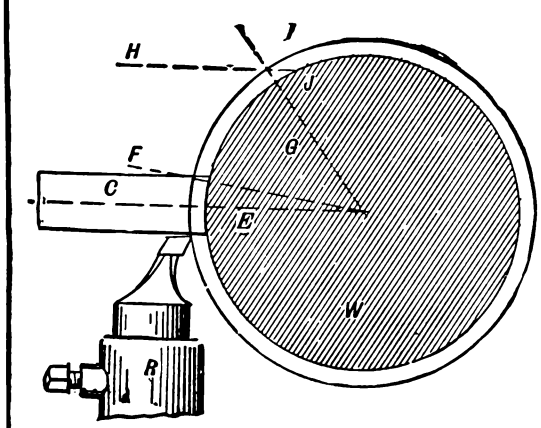

Fig. 1321.

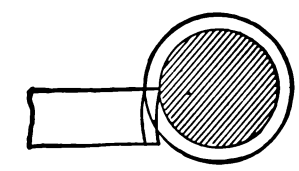

Fig. 1322.

1320, in which H is a hob, which is a piece of steel threaded and serrated as shown, to give cutting edges to act, as the hob rotates, upon the chaser C. If the chaser is cut while held in a constant horizontal plane, its teeth will have the same curvature as the hob; or, in other words, they will fit its circumference. Suppose that the chaser, being cut up by the hob, and then hardened, is applied to a piece of work of the same diameter as the hob, and held in the same vertical plane, as in Fig. 1320, it is obvious that, there being no clearance, the teeth cannot cut. Or suppose it be applied to a piece of work of smaller diameter, as in Fig. 1324, it cannot, unless its position be lowered, as in Fig. 1322, or else it must be elevated, as in Fig. 1323. In either case the angle

of the thread cut will be different from the angle of the sides of the chaser teeth, and the thread will be of improper depth. Thus, on referring to Fig. 1321, it will be seen that the chaser C has a tooth depth corresponding to that on the work W along the horizontal dotted line E only, because the true depth of thread on the work is its depth measured along a radial line, as line F or G, and the chaser teeth are, at the cutting edge, of a different angle. This becomes more apparent if we suppose the chaser thickness to be extended up to the dotted line H, and compare that part of

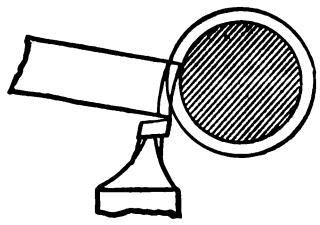

Fig. 1323.

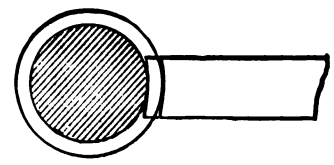

Fig. 1324.

its length that lies within the two circles I J, representing the top and bottom of the thread, with the length of radial line G, that lies within these circles. If, then, the chaser be lowered, to enable it to act, it will cut a thread whose sides will be of more acute angle than are the sides of the chaser teeth or of the hob from which it was cut. The same effect is caused by using a chaser upon a larger diameter of work than that of the hob from which the chaser was cut, because the increased curvature of the chaser teeth acts to give the teeth less contact with the work, as

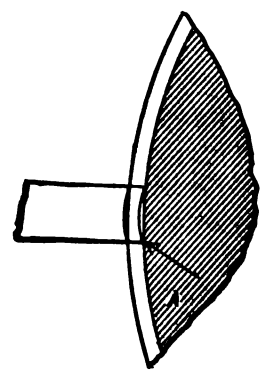

Fig. 1325.

is shown in Fig. 1325, for the teeth cannot cut without either the lower corners A of the teeth being forced into the metal, or else the chaser being tilted to relieve them of contact. To obviate these difficulties and enable a chaser to be used upon various diameters of work, it is, while being cut up by the hob, moved continuously up and down, as denoted in Fig. 1326, by A and B, which represent two positions of the chaser. The amount of this movement is sufficient to make the chaser teeth more straight in their lengths, and to give them a certain amount of clearance, an

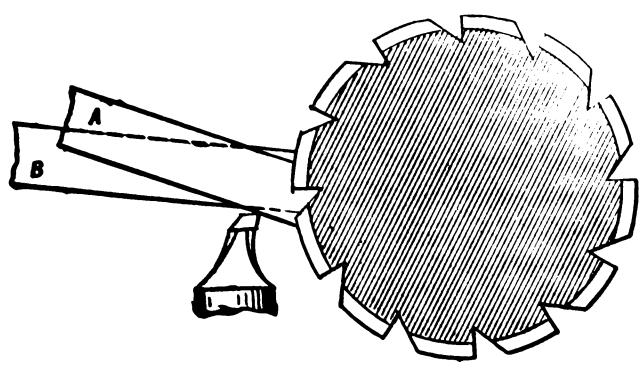

Fig. 1326.

example of the form of chaser thus produced being shown in Fig. 1327, applied to two different diameters of work, as denoted by the circle A and segment of a circle B, C representing the chaser.

To obtain the most correct results with such a chaser, it must be applied to the work in such a way that it has as little clearance as will barely enable it to cut, because it follows from what has been said with reference to single-pointed threading tools that to whatever amount the chaser has clearance, a corresponding error of thread angle and depth is induced. In hand use, therefore, it does not matter at what height the chaser is applied so long as it is elevated sufficiently to barely enable it to cut.

After the chaser is cut on the hob, its edges, as at C, and the corner, as at D, in Fig. 1328, should be rounded off, so that they

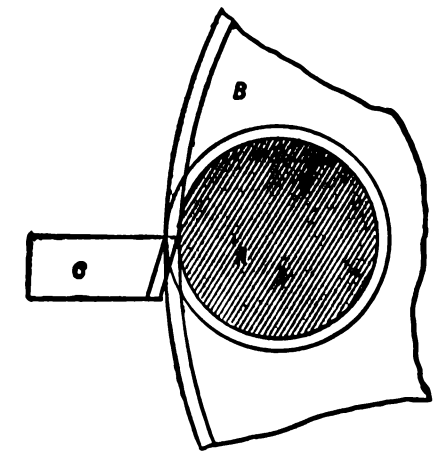

Fig. 1327.

may not catch in any burr which the heel of the hand tools may leave on the surface of the hand rest.

For roughing out the threads on wrought iron or steel the top face should be hollowed out, as shown in Fig. 1328, which will enable the chaser to cut very freely. For use on cast iron the top face should be straight, as shown in Fig. 1328 at A, while for use on

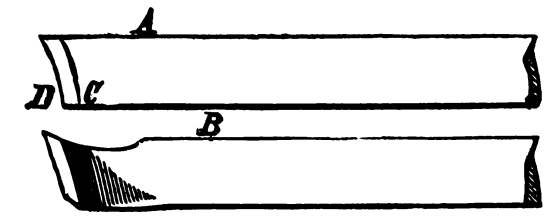

Fig. 1328.

soft metal, as brass, the top face must be ground off, as shown in Fig. 1329.

The Pratt and Whitney Co. cut up chasers by the following method: In place of a hob, a milling cutter is made, having concentric rings instead of a thread. The cutters are revolved on a milling machine in the ordinary manner. The chaser is fastened in a chuck fixed on the milling machine table, and stands at an

Fig. 1329.

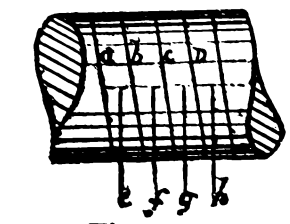

Fig. 1330.

angle of 15°. It is traversed beneath the milling cutter, and thus cut up with teeth whose lengths are at a right angle to the top and bottom faces of the chaser; hence the planes of the length of the teeth are not in the same plane as that of the grooves of the thread to be cut. Thus, let *a*, *b*, *c*, and *d*, Fig. 1330,

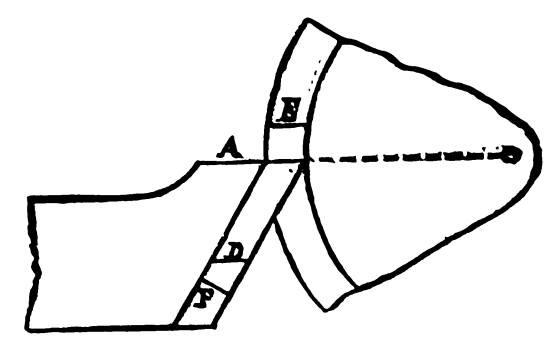

Fig. 1331.

represent the planes of the thread on the work, and *e*, *f*, *g*, *h*, will be the planes of the lengths of the chaser teeth.

The chaser, however, is given 15° of bottom rake or clearance, and this causes the sides of the chaser teeth to clear the sides of the thread.

Now, suppose the top face A, Fig. 1331, of the chaser to be

parallel with the face of the tool steel, and to lie truly horizontal and in the same plane as the centre of the work. This clearance will cause the thread cut by the chaser to be deeper than the natural depth of the chaser teeth. Thus, in Fig. 1331 is shown a chaser (with increased clearance to illustrate the point desired), the natural depth of whose thread is represented by the line F, but it is shown on the section of work that the thread cut by the tool will be of the depth of the line D, which is greater than

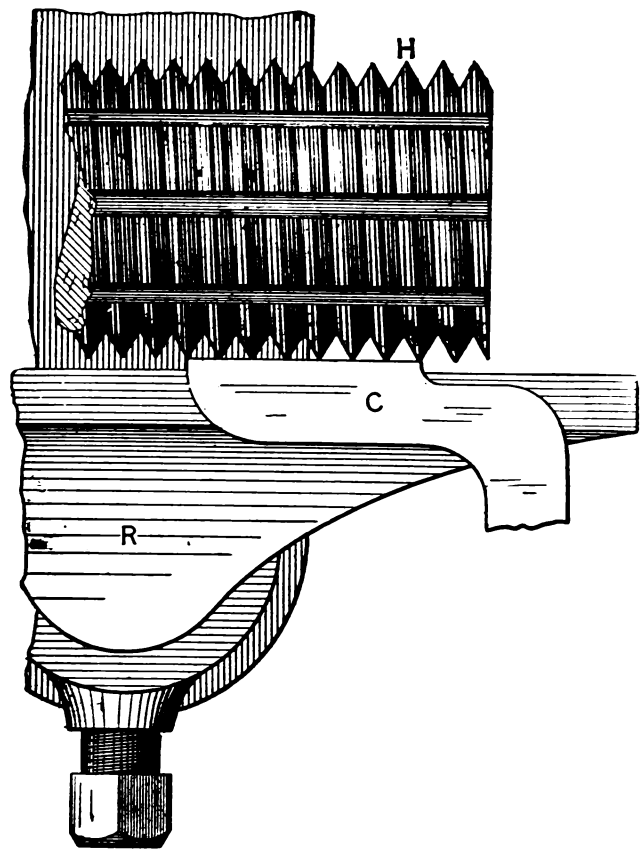

Fig. 1332.

the length or depth of F, as may be more clearly observed by making a line E, which, being parallel to A, is equal in length to D, but longer than F. Hence, the clearance causes the chaser under these conditions to cut a thread of the same pitch, but deeper than the grooves of the hub, and this would alter the angles of the thread. This, however, is taken into account in forming the angles of the thread upon the milling cutter, and, therefore, of the chaser, which are such that with the tool set level with the

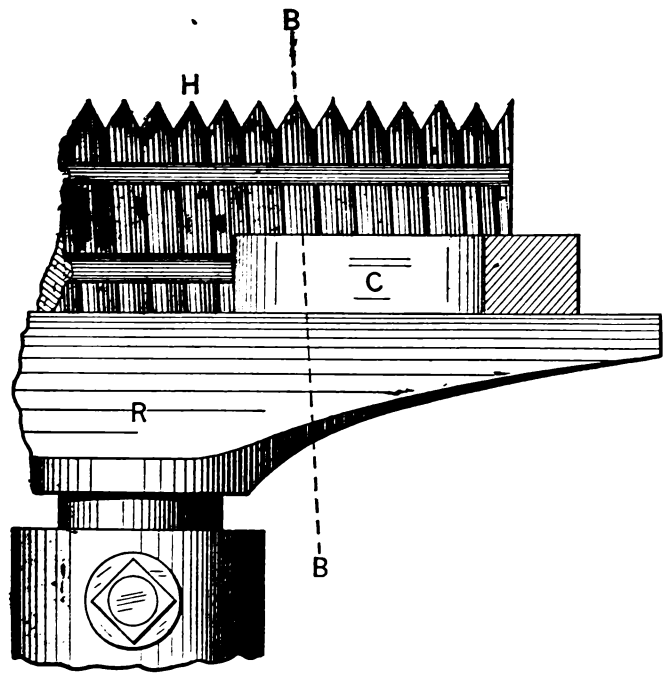

Fig. 1333.

work centre, the thread cut will be of correct angle, notwithstanding the clearance given to the teeth.

In order to enable the cutting of an inside chaser from a hub, it requires to be bent as in Fig. 1332, in which H is the hub, R the lathe rest, and C the chaser. After the chaser is cut, it has to be straightened out, as shown in Fig. 1318, in which is represented a washer being threaded and shown in section; C is the chaser and R the lathe rest, while P is a pin sometimes let into the lathe rest to act as a fulcrum for the back of the chaser to force it to its cut, the handle end of the chaser being pressed inwards.

When an inside chaser is cut from a hub (which is the usual method) or male thread, its teeth slant the same as does the male thread on the side of the hub on which it is cut, and in an opposite direction to that of the thread on the other side of the hub. Thus, in Fig. 1333, H is the hub, C the chaser, and R the lathe rest. The slope of the chaser-teeth is shown by the dotted line B. Now, the slant of the thread on the half circumference of the hub not shown or seen in the cut will be in an opposite direction, and in turning the chaser over from the position in which it is cut (Fig. 1333) to the position in which it is used (Fig. 1334), and applying it from a male to a female thread, we reverse the direction with

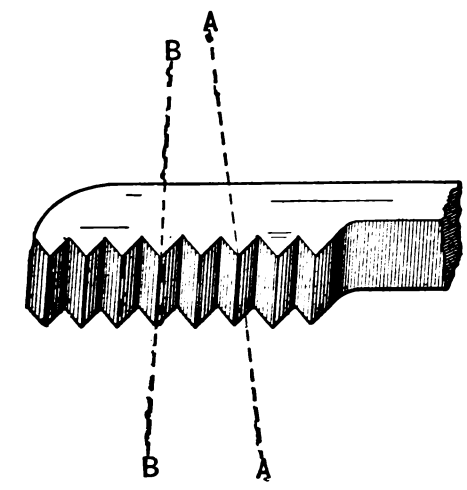

Fig. 1334.

relation to the work in which the chaser-teeth slant; or, in other words, whereas the teeth of the chaser should lie as shown in Fig. 1334 at A A, they actually lie as denoted in that figure by the dotted line B B. As a consequence, the chaser has to be tilted over enough to cause the sides of the chaser-teeth to clear the sides of the thread being cut, which, as they lie at opposite angles, is sufficient to cause the female thread cut by the chaser to be perceptibly shallower than the chaser-teeth, for reasons which have been explained with reference to Fig. 1321. It may be noted however, that an inside chaser cannot well be used with rake, hence the tilting in this case makes the thread shallower instead of deeper.

To obviate these difficulties the hub for cutting a right-hand inside chaser should have a left-hand thread upon it, and *per*

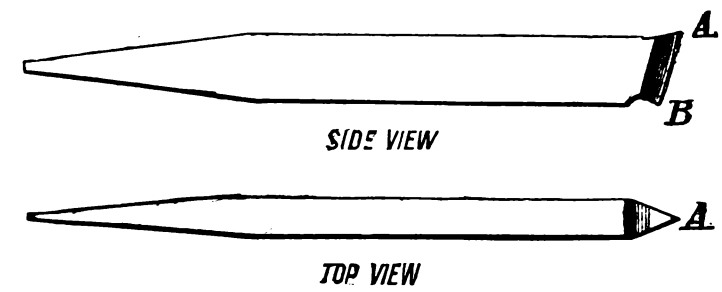

Fig. 1335.

contra, an inside chaser for cutting a left-hand thread should be cut from a hub having a right-hand thread.

The method of starting an outside thread upon wrought iron or steel to cut it up with a chaser is as follows:—

The work is turned up to the required diameter, and the V-tool shown in Fig. 1335 is applied; the lathe is run at a quick speed, and the heel of the tool is pressed firmly to the face of the lathe rest, the handle of the tool must be revolved from right to left at the same time as it is moved laterally from the left to the right, the movement being similar to that already described for the graver, save that it must be performed more rapidly. It is in fact the relative quickness with which these combined movements are performed which will determine the pitch of the thread. The appearance of the work after striking the thread will be as shown in Fig. 1336, A being the work, and B a fine groove cut upon it by the V-tool.

The reason for running the lathe at a comparatively fast speed

is that the tool is then less likely to be checked in its movement by a seam or hard place in the metal of the bolt, and that, even if the metal is soft and uniform in its texture, it is easier to move the tool at a regular speed than it would be if the lathe ran comparatively slowly.

If the tool is moved irregularly or becomes checked in its forward movement, the thread will become waved or "drunken"—that is, it will not move forward at a uniform speed; * and if the thread is drunken when it is started, the chaser will not only fail to rectify it, but, if the drunken part occurs in a part of the iron either harder or softer than the rest of the metal, the thread will become

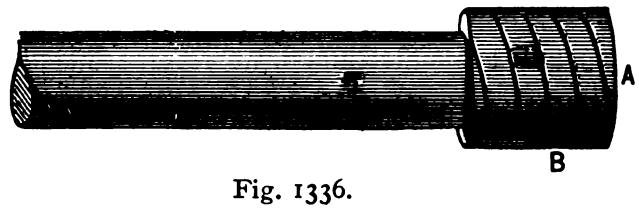

Fig. 1336.

more drunken as the chaser proceeds. It is preferable, therefore, if the thread is not started truly, to try again, and, if there is not sufficient metal to permit of the starting groove first struck being turned out, to make another farther along the bolt. It takes much time and patience to learn to strike the requisite pitch at the first trial; and it is therefore requisite for a beginner to leave the end of the work larger in diameter than the required finished size, as shown in Fig. 1336, so as to have sufficient metal to turn out the groove cut by the V-tool at the first trial cut, and try again.

If the thread is to be cut on brass the V-tool must not have any top rake. Some turners start threads upon brass by placing the chaser itself against the end of the work and sweeping it rapidly from left to right (for a right-hand thread), thus obviating the use of the V-tool.

In all cases the work should be rounded off at the end to prevent the chaser-teeth from catching.

In applying the chaser to the groove cut by the V-tool the leading tooth should be held just clear of the work at first, and only be brought to touch the work after the rear teeth have found and are traversing in the groove. By this means the chaser will carry the thread forward more readily and true. The thread must be carried forward but a short distance at each passage of the chaser, gradually deepening the thread while carrying it forward.

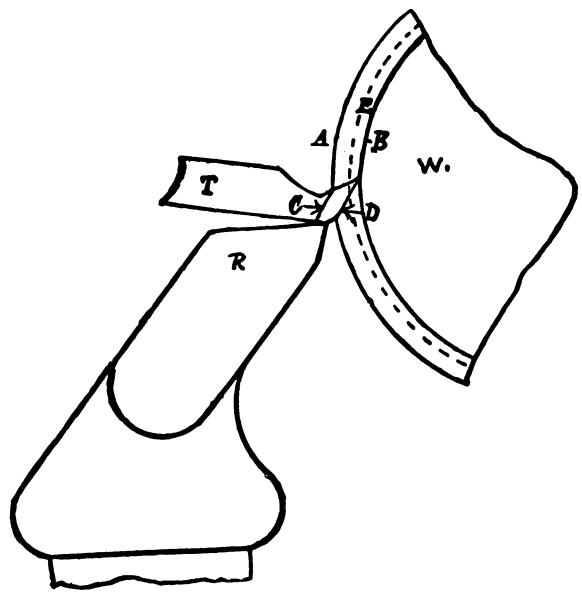

Fig. 1337.

To start an inside thread the corner of the hole at its entrance should be rounded off and the back teeth of the chaser placed to touch the bore while the front teeth are clear. The lathe is to be run at a quick speed, and the chaser moved forward at as near the proper speed as can be judged. When the chaser is moved at the proper speed, the rear teeth will fall into the fine grooves cut by the advance ones, and start a thread, while otherwise promiscuous grooves only will be cut. It is an easy matter, however, to start a double thread with an inside chaser; hence, when the thread is started the lathe should be stopped and the thread examined.

* See Fig. 253, Plate II., Vol. I.

The chaser should be placed with its top face straight above the horizontal level of the work and held quite horizontal, and the handle end then elevated just sufficient to give the teeth clearance enough to enable them to cut; otherwise, with a chaser having top rake, the thread cut will be too deep, and its sides will be of improper angle one to the other.

Thus, in Fig. 1337, W represents a piece of work, R the lathe rest, and T the chaser. The depth of the thread cut in this case will be from the circle A to the circle B; whereas the depth of the chaser teeth, and therefore the proper depth for the thread, is from C to D. Thus tilting the handle end of the chaser too much has caused the chaser teeth to cut a thread too deep. If on brass work the chaser has its top face ground off as in figure, tilting the handle too much will cause the thread cut to be too shallow, and in both cases the error in thread depth induces a corresponding error in the angles of the sides of the thread one to the other and relative to the axial line of the bolt or work.

If the chaser teeth are held at an angle to the work surface, the thread cut will be of finer pitch than the chaser, and the angles of the sides of the thread on the work will not be the same as those of the teeth. It is permissible, however, during the early cuts taken with a hand chaser to give the chaser a slight

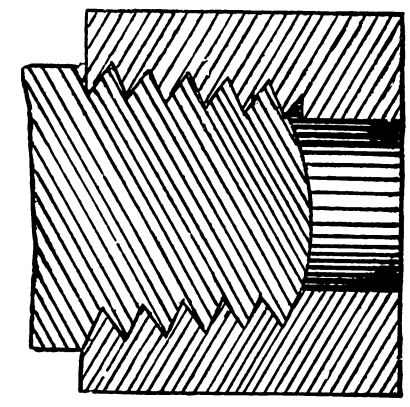

Fig. 1338.

degree of such angle, because it diminishes the length of cutting edge, and causes the chaser to cut more freely, especially when the pitch of the thread is coarse and the chaser is becoming dull.

In the case of a taper thread the same rule, that the thread may be roughed out with the chaser teeth at an angle to the surface lengthways of the work, but must be finished with the teeth parallel to the surface, holds good.

Thus, in Fig. 1338 is a taper plug fitting in a ring having a threaded taper bore, the threads matching, and having the thread sides in both cases at an equal angle to the surface, lengthways of the work, though the tops and bottoms of the thread are not parallel with the axial line of the work.

WOOD TURNING TOOLS.—Wood turning in the ordinary lathe is generally performed by hand tools, and of these the principal is the gouge, which in skillful hands may be used to finish as well as to rough out the work (although there are other more useful finishing tools to be hereafter described).

It is used mainly, however, to rough out the work and to round out corners and sweeps. The proper form for this tool is shown in Fig. 1339, the bevel on the end of the back or convex side being carried well round at the corners, so as to bring those corners up to a full sharp cutting edge on the convex or front side.

The proper way to hold a gouge is shown in Fig. 1340, in which the cut taken by the tool is being carried from right to left, the face plate of the lathe being on the left side, so that by holding it in the manner shown the body and arms are as much as possible out of the way of the face plate, which is a great consideration in short work. But if the cut is to be carried from left to right, the relative position of the hands may be changed.

When the work runs very much out of true, or has corners upon it, as in the case of square wood, the forefinger may be placed under the hand rest, and the thumb laid in the trough of the gouge, pressing the latter firmly against the lathe rest to prevent the tool edge from entering the work too far, or, in other words, to regulate the depth of the cut, and prevent its becoming so great as to force the tool from the hands or break it, as is some-

times the case under such circumstances. When the gouge is thus held, its point of rest upon the lathe rest may be used as a fulcrum, the tool handle being moved laterally to feed it to the cut, which is a very easy and safe plan for learners to adopt, until practice gives them confidence. The main point in the use of the gouge is the plane in which the trough shall lie. Suppose,

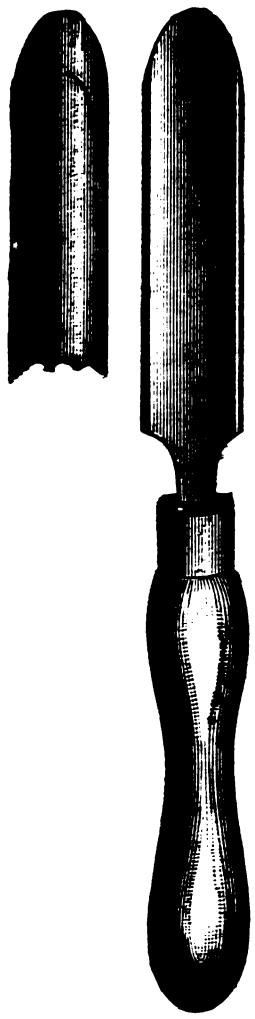

Fig. 1339.

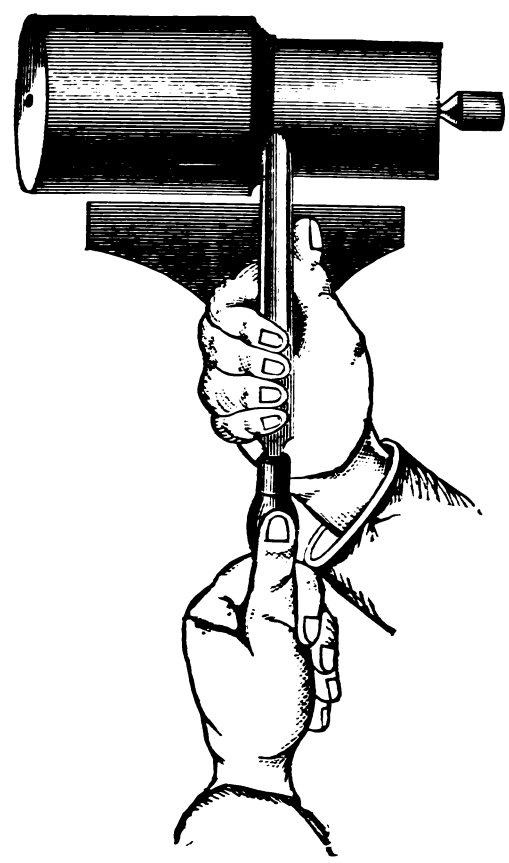

Fig. 1340.

for example, that in Fig, 1341 is shown a piece of work with three separate gouge cuts being taken along it, that on the right being carried in the direction of the arrow. Now the gouge merely acts as a wedge, and the whole of the pressure placed by the cut on the trough side or face of the gouge is tending to force the gouge in the direction of the arrow, and therefore forward into its cut, and this it does, ripping along the work and often throwing it out of the lathe. To avoid this the gouge is canted, so that when cutting from right to left it lies as shown at B, in which case the pressure of the cut tends rather to force the gouge back from the cut, rendering a slight pressure necessary to feed it forward. The gouge trough should lie nearly horizontal lengthwise, the cutting edge being slightly elevated. The gouge should never (for turning work) be ground in the trough (as the concave side is termed), and should always be oilstoned, the trough being stoned with a slip of stone lying flat along the trough, the back being rotated upon

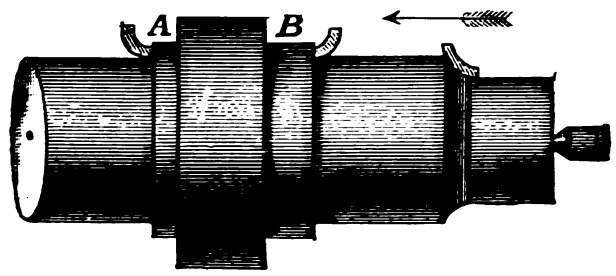

Fig. 1341.

a piece of flat stone, and held with the ground surface flat on the surface of the stone, and so pressed to it as to give most pressure at and near the cutting edge.

For finishing flat surfaces, the chisel shown in Fig. 1342 is employed. It should be short, as shown. It should be held to the work in a horizontal position, or it is apt to dig or rip into the work, especially when it is used upon soft wood. Some expert workmen hold it at an angle for finishing purposes, which makes it cut very freely and clean, but increases the liability to dig into the work; hence learners should hold it as shown.

Another excellent finishing tool is the skew-chisel, Fig. 1343, so

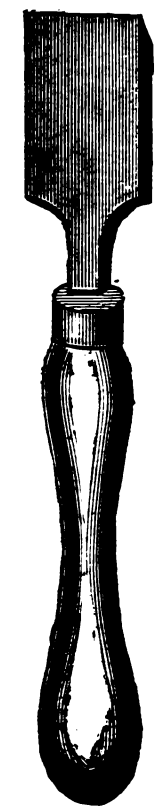

Fig. 1342.

Fig. 1343.

called because its cutting edge is at an angle, or askew with the body of the tool. This tool will cut very clean, leaving a polish on the work. It also has the advantage that the body of the tool may be kept out of the way of flanges or radial faces when turning

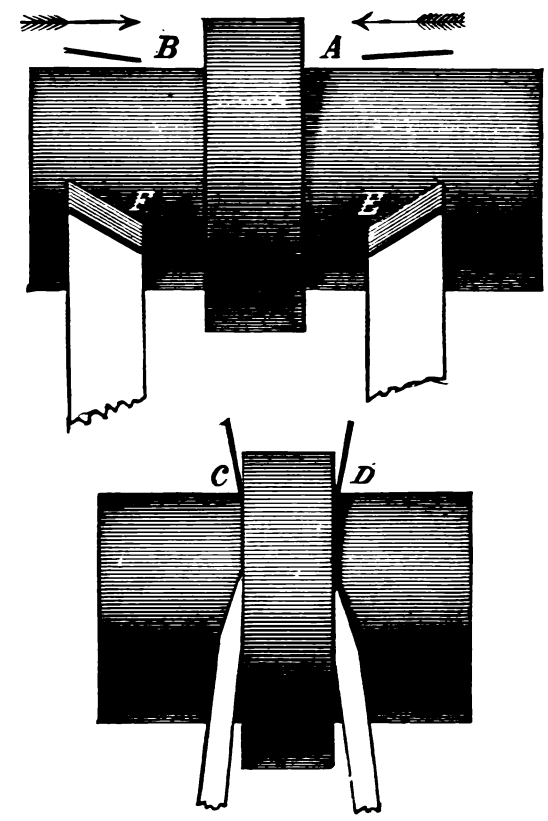

Fig. 1344.

cylindrical work, or may, by turning it on edge, be used to finish radial faces. It is shown in Fig. 1343 by itself, and in Fig. 1344 turning up a stem. It is held so that the middle of the edge does

the cutting, and this tends to keep it from digging into the work. The bevels forming the cutting edge require to be very smoothly oilstoned.

The whole secret of the skillful and successful use of this valuable tool lies in giving it the proper inclination to the work. It is shown in Fig. 1344, at E, in the proper position for taking a cut from right to left, and at F in position for taking a cut from left to right. The face of the tool lying on the work must be tilted over, for E as denoted by line A, and for F as denoted by the line B, the tilt being only sufficient to permit the edge to cut. If tilted too much it will dig into the work; if not tilted, the edge will not meet the work, and therefore cannot cut. For cutting down the ends of the work, or down a side face, it must be tilted very slightly, as denoted in figure by C D, the amount of the tilt regulating the

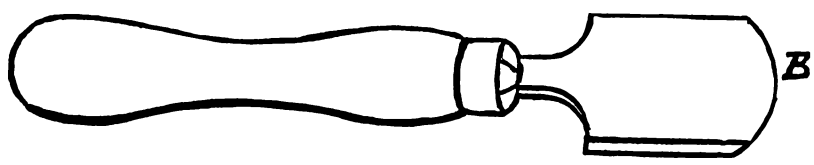

Fig. 1345.

depth of the cut, so that when the cutting edge of the tool has entered the wood to the requisite depth, the flat face of the tool will prevent the edge from entering any deeper. In cutting down a radial face the acute corner of the tool leads the cut, whereas in in plain cylindrical work the obtuse is better to lead.

For cutting down the ends, for getting into small square corners, and especially for small work, the skew chisel is more handy than the ordinary chisel, and leaves less work for the sand-paper to do. Beginners will do well to practise upon black walnut, or any wood that is not too soft, roughly preparing it with an axe to something near a round shape.

For finishing hollow curves the tool shown in Fig. 1345 is employed, the cutting edge being at B; the degree of the curve determines the width of the tool, and, for internal work the tool is usually made long and without a handle.

The tool shown in Fig. 1346 is employed in place of the gouge in cases where the broad cutting edge of the latter would cause tremulousness. It may be used upon internal or external work, being usually about two feet long. For boring purposes, the tools

Fig. 1346.

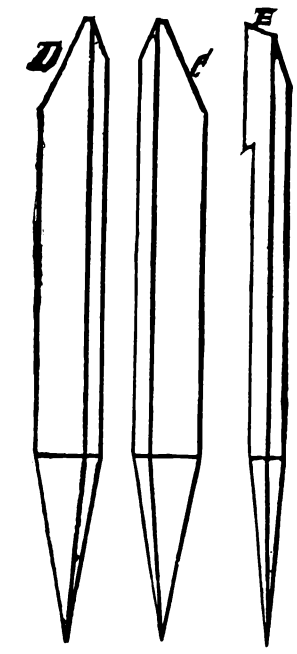

Fig. 1347.

shown in Fig. 1347 are employed, the cutting edges being from the respective points along the edges C, D, respectively. But when the bore is too small to admit of the application of tools having their cutting edges on the side, the tool shown in Fig. 1347 at E is employed, which has its cutting edge on the end.

Chapter XIV.—MEASURING MACHINES, TOOLS, AND DEVICES.

MEASUREMENTS are primarily derived in Great Britain and her colonies, and in the United States, from the English Imperial or standard yard. This yard is marked upon a bar of "Bailey's metal" (composed of 16 parts copper, 2½ parts tin, and 1 part zinc), an inch square and 38 inches long. One inch from each end is drilled a hole about three-quarters through the whole depth of the bar, into which are fitted gold plugs, whose upper end faces are level with the axis of the bar. Across each plug is marked a fine line, and the distance between these lines was finally made the standard English yard by an Act of Parliament passed in 1855. A copy of this bar is in the possession of the United States Government at Washington, and all the standard measuring tools for feet, inches, &c., are derived from subdivisions of this bar.

The standard of measurement in France and her colonies, Italy, Germany, Portugal, British India, Mexico, Roumania, Greece, Brazil, Peru, New Granada, Uruguay, Chili, Venezuela, and the Argentine Confederation, is the French mètre, which is also partially the standard in Austria, Bavaria, Wurtemberg, Baden, Hesse, Denmark, Turkey, and Switzerland. It consists of a platinum bar, called the "mètre des archives," whose end faces are parallel, and the length of this bar is the standard mètre. But as measuring from the ends of this bar would (from the wear) impair its accuracy, a second bar, composed of platinum and iridium, has been made from the "mètre des archives." This second bar has ruled upon it two lines whose distance apart corresponds to the length of the "mètre des archives," and from the distance between these lines the subdivisions of the mètre have been obtained.

As all metals expand or contract under variations of temperature, it is obvious that these standards of length can only be accurate when at some given temperature: thus the English bar gives a standard yard when it is at a temperature of 62° Fahr., while the French standard bar is standard at a temperature of 32° Fahr., which corresponds to 0 in the centigrade thermometer. But if a bar is copied from a standard, and is found to be too short, it is obvious that if its amount of expansion under an increase of temperature be accurately known, it will be an accurate standard at some higher temperature, or in other words, at a temperature sufficiently higher to cause it to expand enough to compensate for its error, and no more.

As all bars of metal deflect from their own weight, it is obvious that the bar must be supported at the same points at which it rested when the lines were marked, and it has been determined by Sir George Airy, that the best position for the points of support for any bar may be obtained as follows: Multiply the number of the points of support by itself (or, as it it is commonly calleo, "square it"), and from the sum so obtained subtract 1. Then subtract the square root of the remainder, which gives a sum that divided into the length of the bar will represent the distance apart for the points of support. It will be obvious that the points of support must be at an equal distance from each end of the bar.

Measurement may be compared in two ways, by sight and by the sense of feeling. Measurement by sight is made by comparing the coincidence of lines, and is called "line measurement." Measurement by feeling or touch is called "end measurement," because the measurement is taken at the ends. If, for example, we measure the diameter of a cylindrical bar, it is an end measurement, because the measurement is in a line at a right angle to the axis of the bar, and the points of touch on each side of the bar are the ends of the measurement, which is supposed to have no width.

In measuring by sight we may, for rude measurements, trust to the unaided eye, as in using the common foot rule, but for such minute comparisons as are necessary in subdividing or transferring a standard, we may call in the aid of the microscope.

The standard gauges, &c., in use in the United States have been obtained from Sir Joseph Whitworth, or duplicated from those made by him with the aid of measuring and comparing machines. It has been found, however, that different sets of these gauges did not measure alike, the variations being thus given by Mr. Stetson, superintendent of the Morse Twist Drill and Machine Co.

At the time the Government established the use of the standard system of screw threads in the navy yards, ten sets of gauges were ordered from a manufacturer. His firm procured a duplicate set of these and took them to the navy yard in Boston and found that they were practically interchangeable. He also took them to the Brooklyn Yard Navy. The following tabular statement shows the difference between them:—

Size.	Navy Yard Male Gauge.	Morse Twist Drill and Machine Co. Male Gauge.	Morse Twist Drill and Machine Co. Female Gauge.
¼	0·25	0·25	Interchanged
5/16	·313	·313	,,
3/8	·375	·3759	
7/16	·437	·437	Interchanged
½	·505	·505	,,
9/16	·562	·564 (−)	,,
5/8	Damaged	·626	,,
11/16	·7505	·751	,,
¾	·876	·8758	,,
1	1·00075	1·00075	,,
1⅛	1·125 (+)	1·125 (−)	Navy Yard (+) / M. T. D. & M. Co. (−)
1¼	1·25	1·25	Interchanged
1⅜	1·375	1·375	,,
1½	1·5	1·5 (−)	(−)
1⅝	1·6245	1·624	(−)
1¾	1·749	1·749	Interchanged
1⅞	1·8745	1·874	(−)
2	1·999	1·999	

The sign (−) means that the piece is small, but not enough to measure.
The sign (+) means that the piece is large, but not enough to measure.

The advantages to be derived from having universally accepted standard subdivisions of the yard into inches and parts of an inch are as follows:—

When a number of pieces of work of the same shape and size are to be made to fit together, then, if their exact size is not known and there is no gauge or test piece to fit them to, each piece must be fitted by trial and correction to its place, with the probability that no two pieces will be of exactly the same size. As a result, each piece in a machine would have to be fitted to its place on that particular machine, hence each machine is made individually.

Furthermore, if another lot of machines are afterwards to be made, the work involved in fitting the parts together in the first lot of machines affords no guide or aid in fitting up the second lot. But suppose the measurements of all the parts of the first lot are known to within the one ten-thousandth part of an inch, which is sufficiently accurate for practical purposes, then the parts may be made to measurement, each part being made in quantities and kept together throughout the whole process of manufacture, so that when all the parts are finished they may go to the assembling or erecting room, and one piece of each part may be taken indiscriminately from each lot, and put together to make a complete machine. By this means the manufacture of the machine may be greatly simplified and cheapened, and the fit of any part may be known from its size, while at the same time a new part may be made at

any time without reference to the machine or the part to which it is to fit.

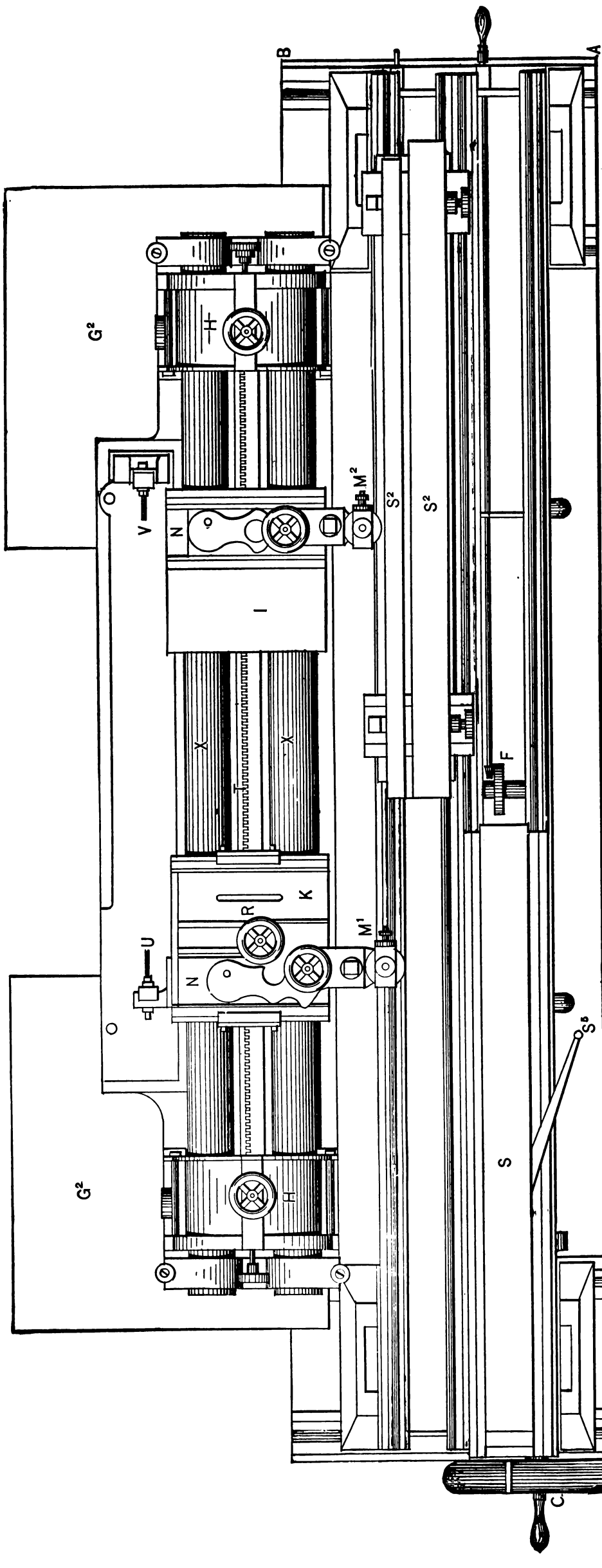

Fig. 1350.

Again, work made to standard size in one shop will fit to that made to standard size in another, providing the standard gauges agree.

The Pratt and Whitney Company, of Hartford, Connecticut, in union with Professor Rogers, of Cambridge University, in Massachusetts, determined to inspect the Imperial British yard, to obtain a copy of it, and to make a machine that would subdivide this copy into feet and inches, as well as transfer the line measurements employed in the subdivisions into end measures for use in the workshops, the degree of accuracy being greater than is necessary in making the most refined mechanism, made under the interchangeable or standard gauge system. The machine made under these auspices is the Rogers-Bond Universal Comparator; Mr. Bond having been engaged in conjunction with Professor Rogers in its construction.

The machine consists of two cylindrical guides, upon which are mounted two heads, carrying microscopes which may be reversed in the heads, so as to be used at the front of the machine for line measurements and on the back for end measurements.

Fig. 1348 is a front, and Fig. 1349 a rear view of the machine, whose details of construction are more clearly shown in the enlarged views, Fig. 1350 and 1352.

Fig. 1350 is a top view, and Fig. 1352 a front view, the upper part of the machine being lifted up for clearness of illustration. X, X, are the cylindrical guides, upon which are the carriages I, K, for the microscopes. The construction of these carriages is more fully seen in Fig. 1351, which represents carriage K. It is provided with a hand-wheel R, operating a pinion in a rack (shown at T in the plan view figure of the machine) and affording means to traverse the carriage along the cylindrical guides. The microscope may be adjusted virtually by the screw M⁴. The base upon which the microscope stands is adjustable upon a plate N, by means of the two slots and binding screws shown,

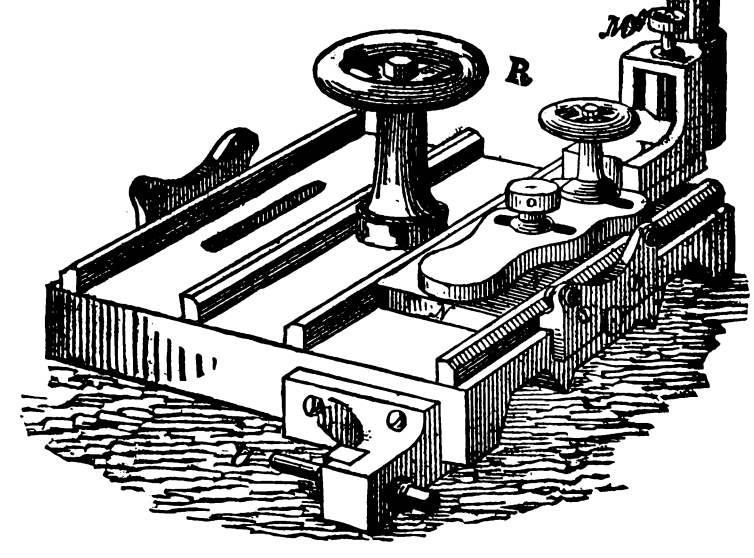

Fig. 1351.

and the plate N fits in a slideway running across the carriage. U is one of the stops used in making end measurements, the other being fixed upon the frame of the machine at V in the plan view, Fig. 1350. The micrometric arrangement for the microscope is shown more clearly in Fig. 1353. The screw B holds the box in position, the edge of the circular base on which it sits being graduated, so that the position of M may be easily read. In the frame M is a piece of glass having ruled upon it the crossed lines, or in place of this a frame may be used, having in it crossed spider web lines. These lines are so arranged as to be exactly in focus of the upper glass of the microscope, this adjustment being made by means of the screw S. The lines upon the bar are in the focus of the lower glass; hence, both sets of lines can be seen

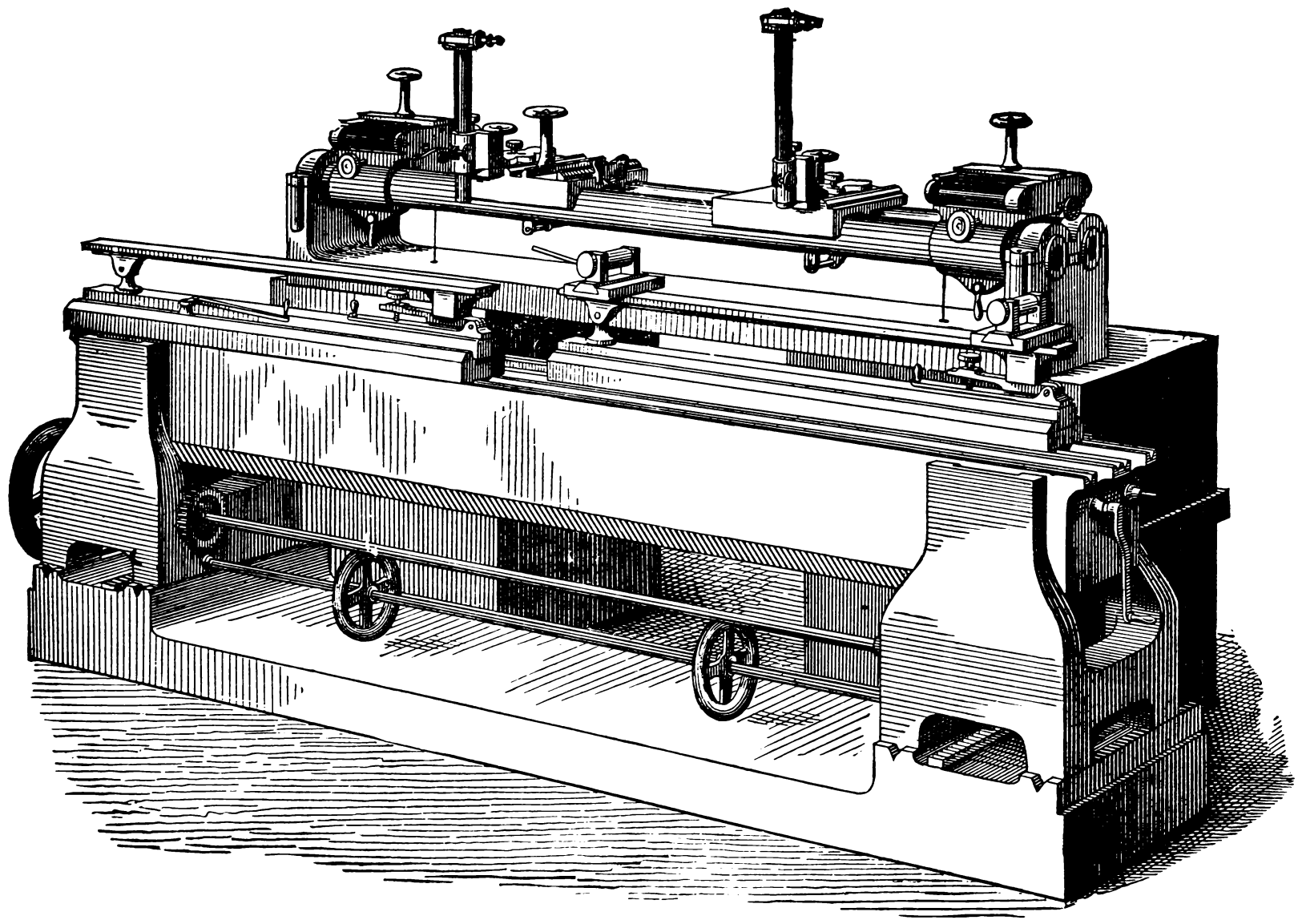

Fig. 1348.

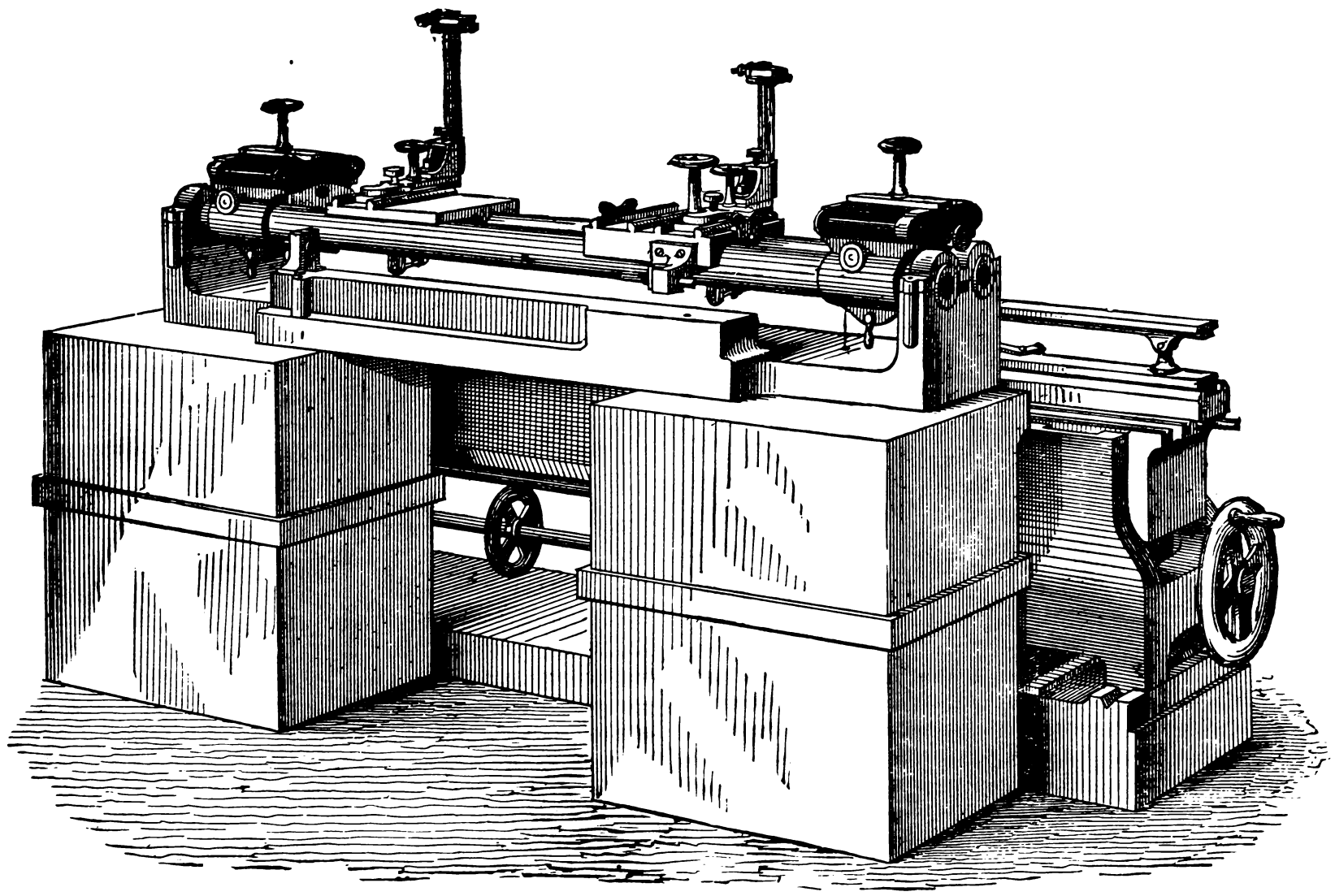

Fig. 1349.

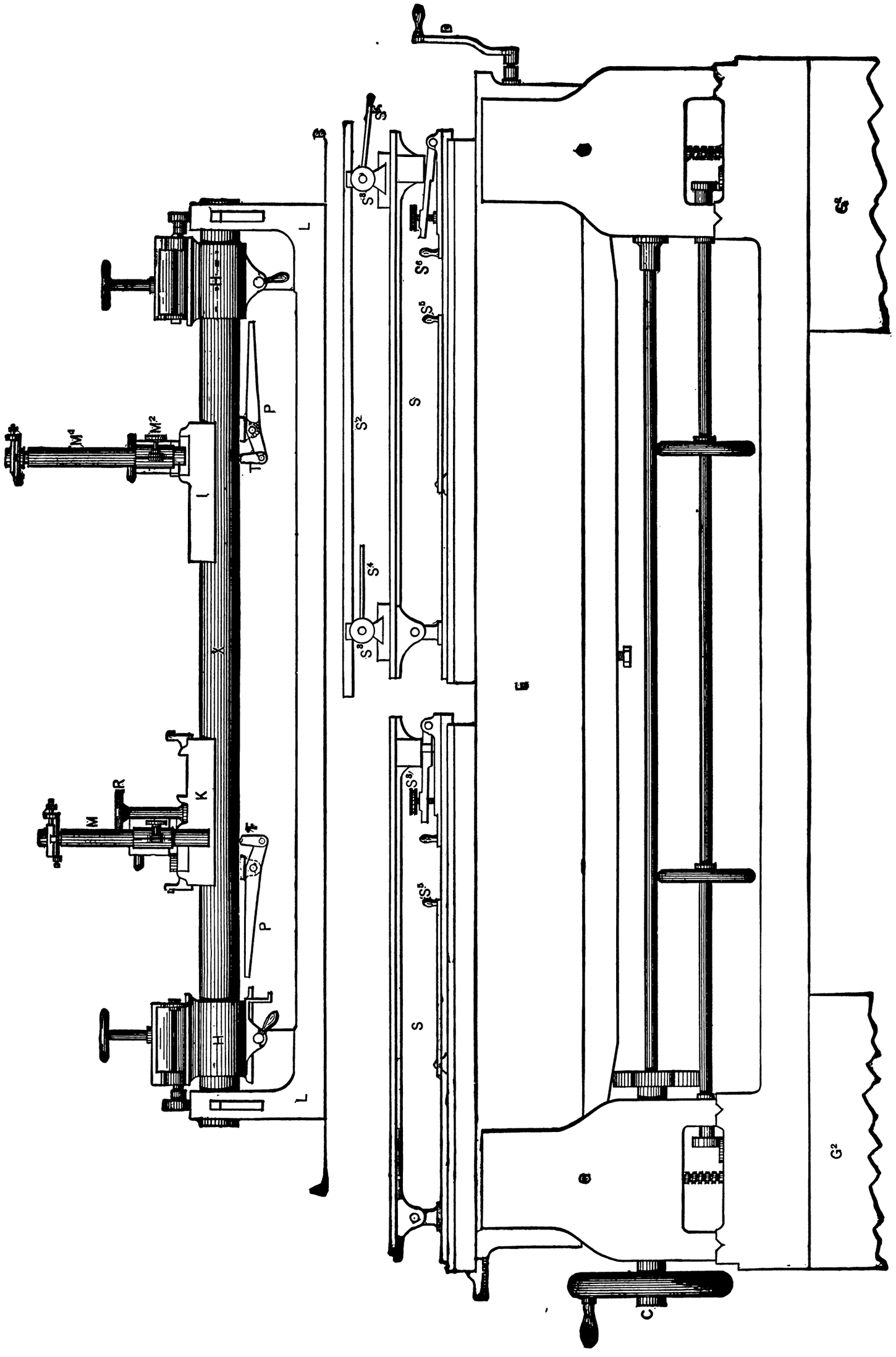

Fig. 1352.

simultaneously, and by suitable adjustment of the microscope can be brought to coincide.

Beneath the cylindrical guides, and supported by the rack T that runs between and beneath them, are the levers P, in Fig. 1352, upon which weights may be placed to take up the flexure or sag of the cylindrical guides.

In Fig. 1532, H, H, are heads that may be fixed to the cylindrical guides at any required point, and contain metallic stops, against which corresponding stops on the microscope carriages may abut,

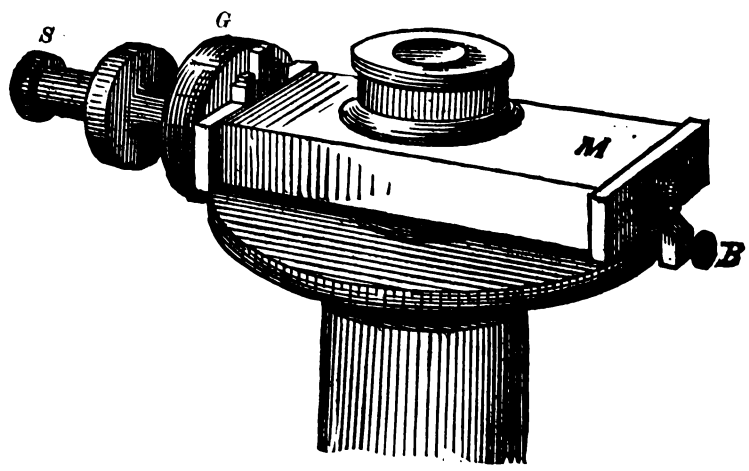

Fig. 1353.

to limit and determine the amount to which these carriages may be moved along the cylindrical guides.

The pressure of contact between the carriage and the fixed stops is found to be sufficiently uniform or constant if the carriage is brought up to the stops (by means of the hand-wheel R, Fig. 1351) several times, and a microscope reading taken for each time of contact. But this pressure of contact may be made uniform or constant for all readings by means of an electric current applied to the carriage through the metallic stops on heads H, H, and those on the carriage.

We have now to describe the devices for supporting the work and adjusting it beneath the microscopes.

Referring, then, to Fig. 1352, E is a bed or frame that may be raised or lowered by means of the hand-wheel C, so as to bring the plate S (on which rests the bar whose line measure is to be compared) within range of the microscopes. The upper face of E is provided with raised V slideways, which are more clearly seen in the end view

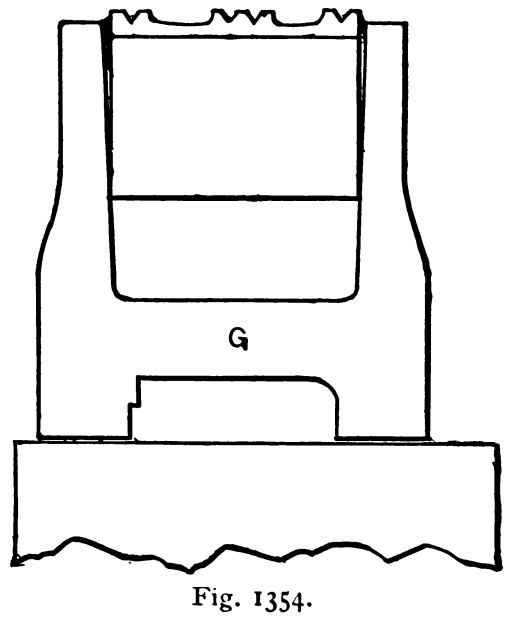

Fig. 1354.

of this part of the machine shown in Fig. 1354. Upon these raised Vs are the devices for adjusting the height of the eccentric rollers S^3, upon which the bars to be tested are laid, S^2 representing one of these bars. To adjust the bars in focus under the microscope, these eccentric rollers are revolved by means of levers S^4. At S^5 is a device for giving to the table a slight degree of longitudinal movement in the base plate that rests upon the raised Vs; on the upper face of E and at S^6 is a mechanism for adjusting the height of that end of the plate S. The base plate may be moved along the raised Vs of E by the hand-wheel D.

To test whether the cylindrical guides are deflected by their own weight or are level, a trough of mercury may be set upon the eccentric rollers S^3, Fig. 1352, and the fine particles of dust on its surface may be brought into focus in the microscope, whose carriage may then be traversed to various positions along the cylindrical guides, and if these dust particles remain in focus it is proof that the guides are level with the mercury surface.

The methods of using the machine are as follows: The standard bar has marked upon its upper face (which is made as true as possible and highly polished) a line B (Fig. 1355), which is called the horizontal line, and is necessary in order to set the bar parallel to the cylindrical guides of the machine. The lines A, A, are those defining the measurement as a yard, a foot, or whatever the case may be, and these are called the vertical lines or lines of measurement.

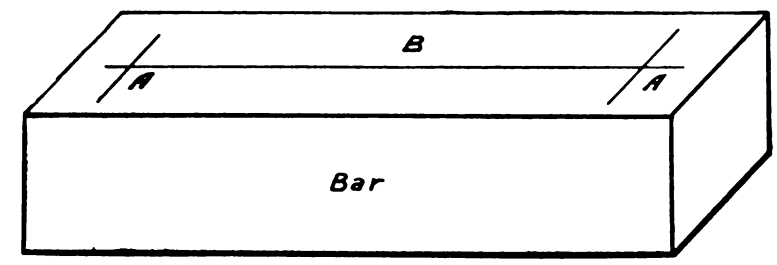

Fig. 1355.

Now, suppose we require to test a bar with the standard and the lines on its face are marked to correspond to those on the standard.

The first operation will be to set the standard bar on the eccentric rollers S^3 in Fig. 1352, and it and the microscopes are so adjusted that the spider web lines in the microscope exactly intersect the lines A and B on the standard, when the microscope carriage abuts against the heads H, Fig. 1352. The standard bar is then replaced by the bar to be tested, which is adjusted without altering the microscope adjustment or the heads H, and if the spider web lines in the microscope exactly coincide with and intersect the lines A and B, the copy corresponds to the standard. But if they do not coincide, then the amount of error may be found by the micrometer wheel G, Fig. 1353.

In this test the carriage is moved up against the stops H several

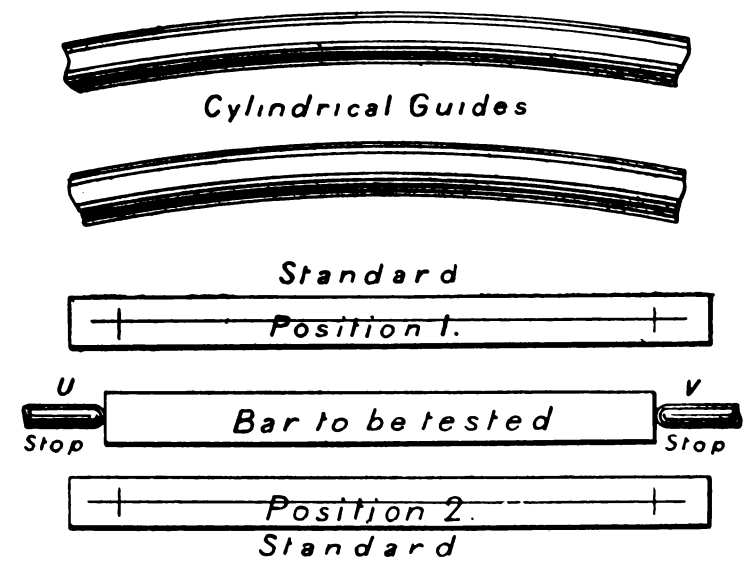

Fig. 1356.

times, and several readings or tests are made, so as to see that the force of the contact of the carriage against the stops H is uniform at each test, and if any variation is found, the average of a number of readings is taken. It is found, however, that with practice the carriage may be moved against the head H by means of the hand-wheel with such an equal degree of force that an error of not more than one fifty-thousandth of an inch is induced. It is found, however, that if too much time is occupied in this test, the heat of the operator's body will affect the temperature of the bars, and therefore expand them and vitiate the comparison. But in this connection it may be noted that if a bar is at a temperature of 40°, and is placed in an ice bath, it does not show any contraction in less than one minute, and that when it does so, the contraction is irregular, taking place in sudden movements or impulses.

Professor Rogers' methods of testing end measures are as follows: To compare a line with an end measure, a standard bar is

set upon the machine, its horizontal and vertical lines being adjusted true to the cylindrical guides by the means already described, and the microscope carriage is so adjusted that the spider web lines of the microscope coincide with the horizontal and vertical lines marked on the standard, while at the same time the stop (U, Fig. 1350) on the carriage K has contact with the fixed stop (V, Fig. 1350.) Carriage K is then moved along the cylindrical guides so as to admit the bar (whose end measure is to be compared with the lines on the standard) between the two stops, and if, with the bar touched by both stops U and V, the microscope spider lines intersect the vertical and horizontal line on the standard bar, then the end measure corresponds to the line measure; whereas, if such

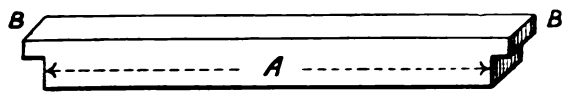

Fig. 1357.

is not the case, the amount of error may be found by noting how much movement of the micrometer wheel of the microscope is required to cause the lines to intersect.

It is obvious that in this test, if the cylindrical guides had a horizontal curvature, the test would not be perfect.

THE HORIZONTAL CURVATURE.—The copy or bar to be tested may be set between the stops, and the standard bar may be placed on one side of it, as in Fig. 1356, and the test be made as already described. It is then set the same distance from the bar to be tested, but on the other side of it, as in figure, and again adjusted for position and tested, and if the readings on the standard bar are the same in both tests, it is proof that the measurements are correct.

Suppose, for example, that the cylindrical guides were curved as in Fig. 1356, it is evident that the vertical lines would appear closer together on the standard bar when in the first position than when in the second position.

In the Rogers machine the amount of error due to curvature in the cylindrical guides in this direction is found to be about $\frac{1}{5000}$ part of an inch in 39 inches, corresponding to a radius of curvature of five miles.

Another method of testing an end with a line measure is as follows: The bar to be measured is shaped as in Fig. 1357, the end measurement being taken at A, and the projection B at each end

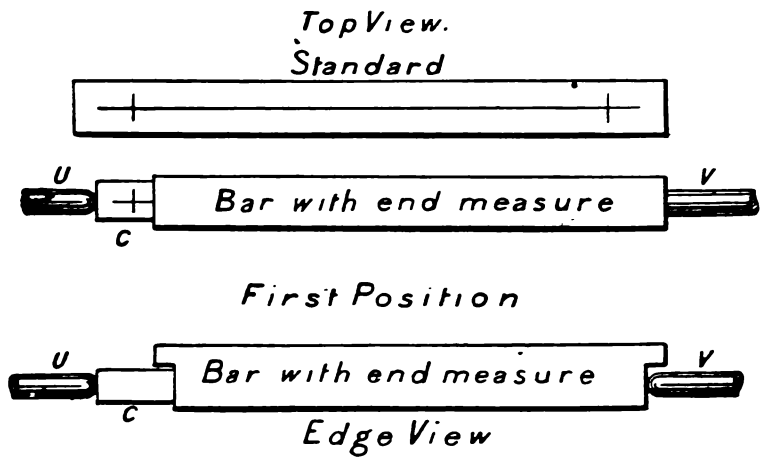

Fig. 1358.

serving to preserve the end surfaces A from damage. The standard bar is then set upon the machine and its horizontal and vertical lines adjusted in position as before described. In connection with this adjustment, however, the bar to be tested is set as in Fig. 1358; C being a block of metal (having marked centrally upon it horizontal and vertical lines), placed between the bar and the fixed stop U, its vertical line being in line with the vertical line on the standard. This adjustment being made, the block C is removed and placed at the other end of the bar, as shown in Fig. 1359, when, if the end measure on the bar corresponds with the line measure on the standard, the vertical line at the other end of the standard will correspond with the vertical line on block C.

To prove that the vertical line is exactly equidistant from each end of the block C, all that is necessary is to place it between the bar and the fixed stop U, Fig. 1350, adjust the microscope to it and then turn it end for end, and if its vertical line is still in line with the spider web of the microscope it is proof that it is central on the block, while if it is not central the necessary correction may be made. It is obvious that it is no matter what the length of C may be so long as its vertical line is central in its length.

In this process the coincidence of the vertical lines on the stan-

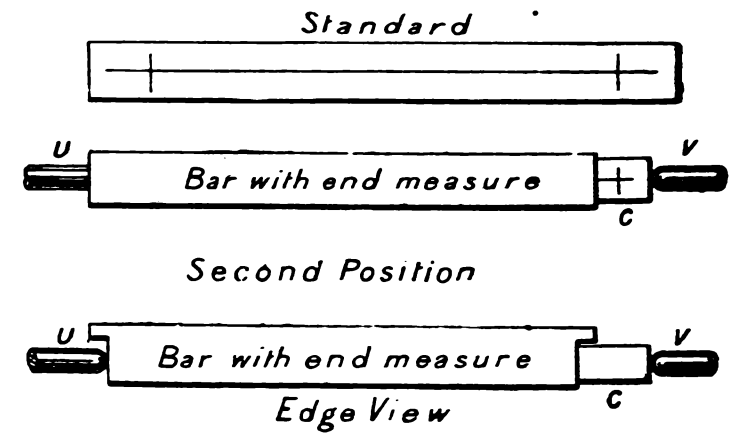

Fig. 1359.

dard and on the piece C are employed to test the end measure on the bar with the line measure on the standard.

Figs. 1360 and 1361 represent the Whitworth Millionth Measuring Machine, in which the measurement is taken by the readings of an index wheel, and the contact is determined from the sense of touch and the force of gravity.

It is obvious that in measuring very minute fractions of an inch one of the main difficulties that arise is that the pressure of contact

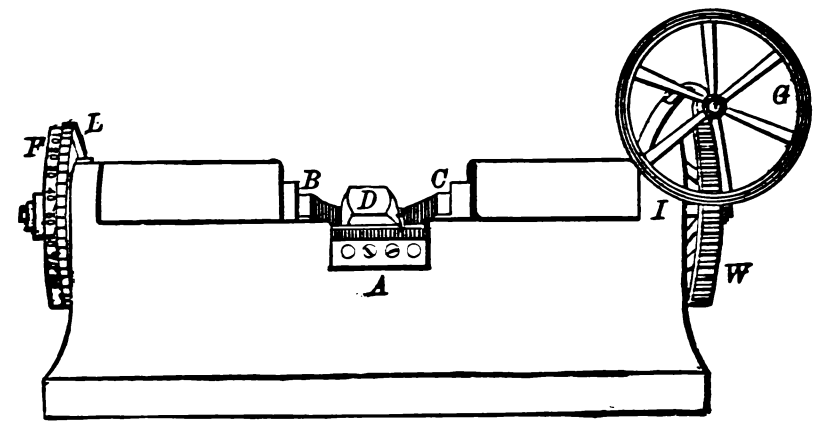

Fig. 1360.—General View.

between the measuring machine and the surfaces measured must be maintained constant in degree, because any difference in this pressure vitiates the accuracy of the measurement. This pressure should also be as small as is consistent with the assurance that contact actually exists, otherwise the parts will spring, and this would again impair the accuracy of the measurement.

If the degree of contact is regulated by devices connected with

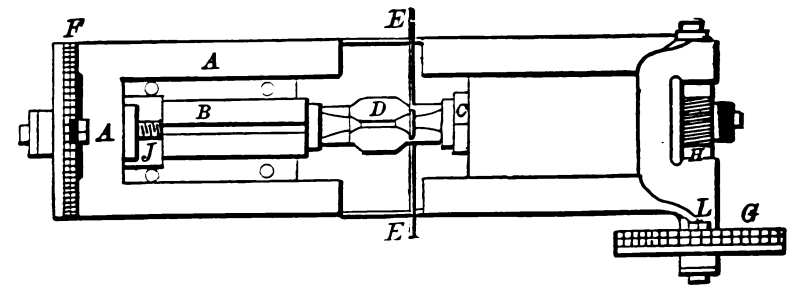

Fig. 1361.—Plan.

the moving mechanism of the machine it is indirect, and may vary from causes acting upon that mechanism. But if it is regulated between the work and the moving piece that measures it, nothing remains but to devise some means of making its degree or amount constant for all measurements; so that if a duplicate requires to be compared with a standard, the latter may first be measured and the duplicate be afterwards measured for comparison.

All that is essential is that the two be touched with an equal

degree of contact, and the most ingenious and delicate method yet devised to accomplish this result is that in the Whitworth machine, whose construction is as follows :—

In a box frame A, is provided a slide-way for two square bars, B, C, which are operated by micrometer screws, one of which is shown at J (the cap over B being removed to expose B and J to view). The bars B, C, are made truly square, and each side a true plane. The groove or slide-way in which they traverse is made with its two sides true planes at a right angle to each other; so that the bars in approaching or receding from each other move with their axes in a straight line. At the two ends of the frame the micrometer screws are afforded journal bearings. The ends of the bars B, C, are true planes at a right angle to the axes of B, C. Bar B is operated as follows: Its operating screw J has a thread

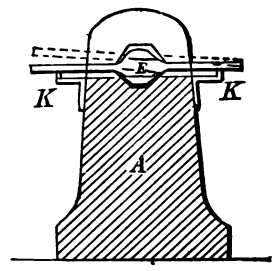

Fig. 1362.

of $\frac{1}{20}$ inch pitch; or in other words, there are twenty threads in an inch of its length. It is rotated by the hand-wheel F, whose rim-face is graduated by 250 equidistant lines of division. Moving F through a distance equal to that between, or from centre to centre of its lines of division, moves B through a distance equal to one five-thousandth part of an inch.

The screw in head I for operating bar C also has a pitch of $\frac{1}{20}$ inch (or twenty threads in an inch of its length), and is driven by a worm-wheel W, having 200 teeth. This worm-wheel W is driven by a worm or tangent-screw H, having upon its stem a graduated wheel G, having 250 equidistant lines marked upon the face of its rim.

Suppose, then, that wheel G be moved through a distance equal to that between its lines of division, that is $\frac{1}{250}$th of a rotation, then the worm H will move through $\frac{1}{250}$th of a rotation, and the worm-wheel on the micrometer screw will be rotated $\frac{1}{250}$th part of its pitch expressed in inches; because a full rotation of G would move the worm one rotation, and thus would move the worm-wheel on the screw one tooth only, whereas it has 200 teeth in its circumference; hence it is obvious that moving graduated wheel G, through a distance equal to one of its rim divisions will move the bar C the one-millionth of an inch; because:

Pitch of thread		Rotation of worm-wheel		Rotation of graduated wheel
$\frac{1}{20}$ inch	×	$\frac{1}{200}$	×	$\frac{1}{250} = \frac{1}{1000000}$

Fixed pointers, as K, Fig. 1362, enable the amount of movement or rotation of the respective wheels F, G, to be read.

A peculiarly valuable feature of this machine is the means by which it enables an equal pressure of contact to be had upon the standards, and the duplicates to be tested therewith. This feature is of great importance where fine and accurate measurements are to be taken. The means of accomplishing this end are as follows :—

In the figures, D is a piece in position to be measured, and between it and the bar C is a feeler consisting of a small flat strip of steel, E E, having parallel sides, which are true planes.

When the pressure of contact upon this piece E E is such that if one end be supported independently the other will just be supported by friction, and yet may be easily moved between D and C by a touch of the finger, the adjustment is complete. At the sides of the frame A are two small brackets, shown at K, in the end view, Fig. 1362, E E being shown in full lines resting upon them, and in dotted lines with one end suspended. The contact-adjustment may thus be made with much greater delicacy and accuracy than in those machines in which the friction is applied to the graduated wheel-rim, because in the latter case, whatever friction there may be is multiplied by the difference in the amount of movement of the graduated rim and that of the bar touching the work.

All that is necessary in the Whitworth machine is to let E E be easy of movement under a slight touch, though capable of suspending one end by friction, and to note the position of the lines of graduation on C with reference to its pointer. By reason of having two operative bars, B, C, that which can be most readily moved may be operated to admit the piece or to adjust the bars to suit the length of the work, while that having the finer adjustive motion, as C, may be used for the final measuring only, thus preserving it from use, and therefore from wear as much as possible; or coarser measurements may be made with one bar, and more minute ones with the other.

So delicate and accurate are the measurements taken with this machine, that it is stated by C. P. B. Shelley, C.E., in his "Workshop Appliances," that if well protected from changes of temperature and from dust, a momentary contact of the finger-nail will suffice to produce a measurable expansion by reason of the heat imparted to the metal. In an iron bar 36 inches long, a space equal to half

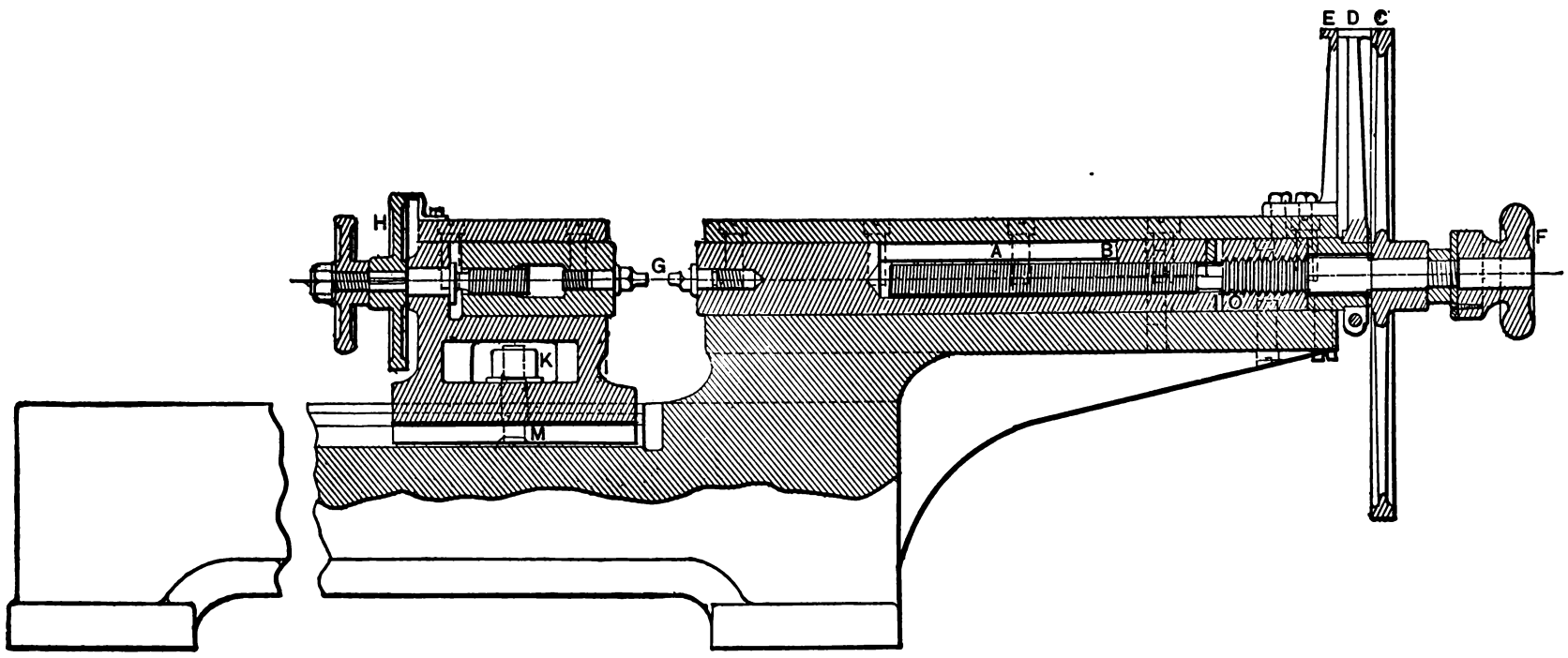

Fig. 1363.

a division on the wheel G having been rendered distinctly measurable by it, this space indicating an amount of expansion in the 36-inch bar equals the one two-millionth part of an inch!

The following figures, which are taken from *Mechanics*, represent a measuring machine made by the Betts Machine Company, of Wilmington, Delaware.

Fig. 1363 shows a vertical section through the length of the machine, which consists of a bed carrying a fixed and an adjustable head, the fixed head carrying the measuring screw and vernier while the adjustable one carries a screw for approximate adjustment in setting the points of the standard bars.

These screws have a pitch of ten threads per inch, and the range of the measuring screw has a range of 4 inches, and the machine is

furnished with firm standard steel bars (4-inch, 6-inch, 18-inch, and 24-inch). The measuring points of the screws are of hardened steel, secured axially in line with the screws, and of two forms, with spherical and flat points, one set of each being used at a time. The larger wheel C is indexed to 1000 divisions, each division representing the ten-thousandth of an inch at the points; the smaller wheel has 100 divisions, each representing the one-thousandth part of an inch at the points. Beside, and almost in contact with, the

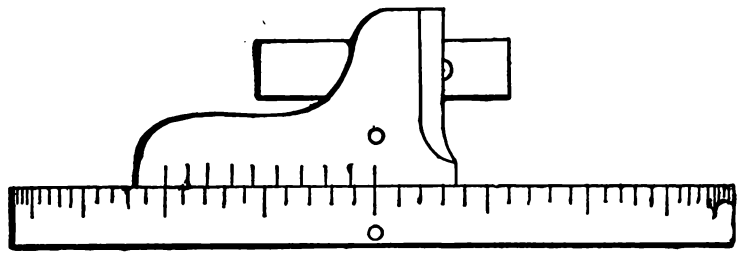

Fig. 1364.

larger wheel is a movable or adjustable pointer E, upon which the error of the screw is indexed for each inch of its length; the screw error is of the utmost importance when positive results are desired. The screw is immersed in oil to maintain a uniform temperature throughout its length, and to avoid particles of dust accumulating on its surface.

As stated above, the readings are indexed to the ten-thousandth part of an inch, but variations to the hundred-thousandth part of an inch can be indicated. The machine will take in pieces to 24

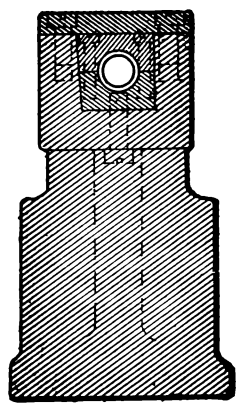

Fig. 1365.

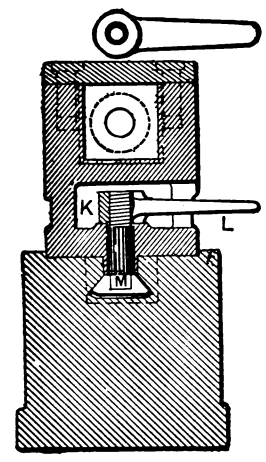

Fig. 1366.

inches in length, and to 4 inches in diameter. In measuring, the points are brought into easy contact and then expanded by turning the larger wheel, counting the revolutions or parts of revolutions to determine the distance between the points or the size of what is to be measured. The smaller machine is constructed so as to indicate by means of vernier attachment to the ten-thousandth part of an inch, and is of value in tool-rooms where standard and special tools are continually being prepared. By its use, gauges and other exact tools can be made, and at the same time keep gauges of all

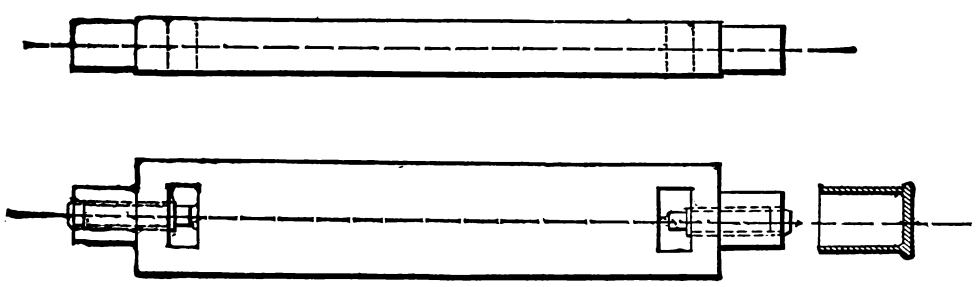

Fig. 1367.

kinds to standard size by detecting wear or derangement. The machine consists of a frame with one fixed head; the other head is moved by a screw; on both heads are hardened steel points. As with the larger machine, the screw error is indicated in such a manner as to permit the operator to guard against reproducing its error in its work. These machines are used for making gauges, reamers, drills, mandrels, taps, and so on.

The errors that may exist in the pitch of the measuring screw are taken into account as follows: The points of the measuring machine should be brought into light contact, the position of index-wheel, vernier, and the adjustable pointer which has the screw error indexed upon it should be as in Fig. 1364; that is, the zeros on index-wheel and vernier should be in exact line, the vernier covering half of the zero line on pointer. To measure $\frac{1}{2}$ inch, for illustration, five complete revolutions of index-wheel should produce $\frac{1}{2}$ inch, and would if we had a perfect screw, but the screw is not perfect, and we must

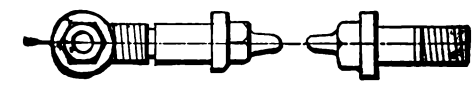

Fig. 1368.

add to the measurement already obtained one-half of the space, stamped upon corrective devise, 0—1. This space 0—1 represents the whole error in the screw from zero to 1 inch. The backlash of the screw should always be taken up.

The details of this machine are as follows:—

In Fig. 1363 the points G are those between which the measuring is done, and the slide held by the nut K in position is adjusted by means of inch bars to the distance to be measured; H, the hand-wheel for moving one point, and F the wheel which moves the other. Fig. 1366 is a cross section of the movable head through the nut K and stud M, by which the movable head is adjusted, and Fig. 1365 is a cross section through the fixed head. The bars used in setting the machine are shown in Fig. 1367, and in Fig. 1368 the points of the measuring screws are shown on a large scale. The

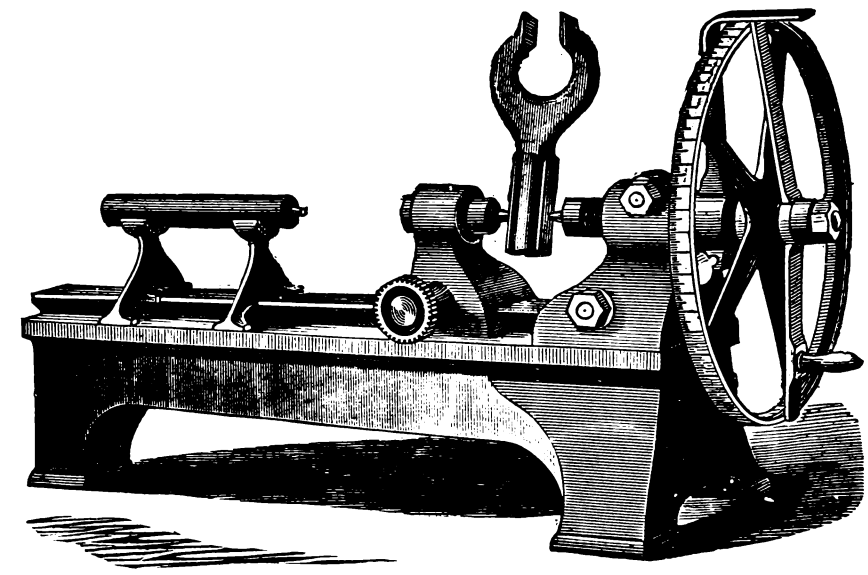

Fig. 1369.

other figures show various details of the machine and their method of construction. The vernier, it will be observed, is a double one. This is shown in Fig. 1364, and is so arranged that the zero is made movable in order to correct the errors of the screw itself. These errors are carefully investigated and a record made of each. Thus, in Fig. 1363 the arm E is graduated so as to show the true zero for different parts of the screw; D can then be adjusted to a correct reading, and the divisions on the large wheel will then be correct to an exceedingly small fraction. This method of construction enables the machine to be used for indicating very minute variations of length.

In Fig. 1369 is shown a measuring machine designed by Professor John E. Sweet, late of Cornell University. The bed of the machine rests on three feet, so that the amount of support at each leg may remain the same, whether the surface upon which it rests be a true plane or otherwise. This bed carries a headstock and a tailstock similar to a lathe. The tailstock carries a stationary feeler, and the headstock a movable one, operated horizontally by a screw passing through a nut provided in the headstock, the axial lines of the two feelers being parallel and in the same plane. The diameters of the two feelers are equal at the ends, so that each feeler shall present the same amount of end area to the work. The nut for the screw operating the headstock feeler is of the same length as the screw itself, so that the wear of the screw shall be equalized as near as possible from end to end, and not be the most at and near the

middle of its length, as occurs when the thread on the screw is longer than that in the nut.

The pitch of the thread on the screw is 16 threads in an inch of length, hence one revolution of the screw advances the feeler $\frac{1}{16}$th inch. The screw carries a wheel whose circumference is marked or graduated by 625 equidistant lines of division. If, therefore, this wheel be moved through a part of a rotation equal to one of these divisions, the feeler will move a distance equal to $\frac{1}{625}$ of the $\frac{1}{16}$ of an inch, which is the ten-thousandth part of an inch.

Fig. 1370 represents a Brown and Sharpe measuring machine for sheet metal. It consists of a stand A with a slotted upright having an adjusting screw C above, and a screw D, with a milled head and carrying a dial, passing through its lower part. One turn of the screw, whose threads are $\frac{1}{16}$th inch apart causes one rotation of the dial, the edge of which is divided into one hundred parts, enabling measurements to be made to thousandths of an inch.

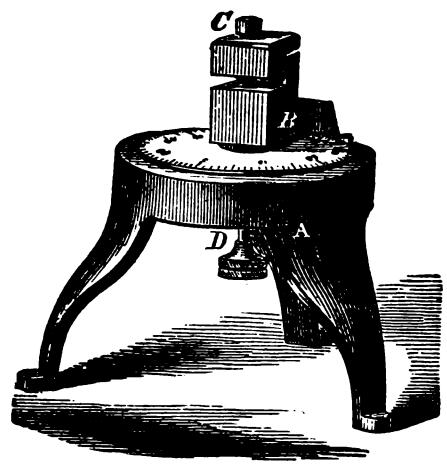

Fig. 1370.

A measuring machine constructed by the Brown and Sharpe Manufacturing Company is illustrated in Plates LXV, and LXVI.

This machine is of that class in which the measuring is done by moving a scale under a microscope. Of course it can be set also by putting a standard gauge between the measuring points, if wanted. The bar of frame A A is very heavy, being about $1\frac{1}{2}$ feet deep and 4 feet long. The work is measured between the measuring points E, F. The operation of measuring is as follows:

The bar E K is moved to the right so that the measuring point E will touch the point F. The microscope H is then set over one line of the scale, generally the zero line. The bar is then moved to the left until the proper distance has been reached, which is indicated by bringing a line of the scale under the microscope. The bar is then fastened by the clamping handle L. The work is then passed between the nibs E and F. The measuring point F is connected to the micrometer screw, the graduated wheel being shown at M. If preferred the work can be measured the same as would be done with a micrometer caliper, the work being placed against the measuring point E and then the point F brought up against it on the right side, and the micrometer reading upon the wheel M shows the size of the work. The scale at G is divided at 40ths of an inch and the micrometer screw has forty threads to an inch. Measurements smaller than $\frac{1}{40}$th of an inch can be made either with the micrometer screw or with the micrometer of the microscope. In measuring with the micrometer of the microscope the bar E K should be moved and the micrometer screw held stationary. The bar or frame A being so heavy, measurements accurately within .00002″ (one fifty-thousandth of an inch) can be made by the methods just described. If, however, it is required to make a finer measurement than this, the microscope I is brought into use, it being placed over the piece J, upon which is a fine line. The two microscopes H and I are tied together by the piece O. Now, in placing the work between the measuring points E and F, we can, by looking through each microscope, tell whether the points have sprung apart, thus not depending upon the stiffness of the frame A. For quick adjustments of the bar E K the pinion and rack at the left are used. For fine adjustment the pinion and rack are held stationary and the adjusting screw P is turned. The slides B B and C can be moved through quite a long distance, so that in measuring a great number of small parts, the wear upon the bed A is not brought all in one place. The lines on the scale G are so fine that they cannot be seen with the naked eye unless the light is very good and the eye very sharp.

Dividing the circle, in Edward Troughton's method, invented in 1809, is as follows: A disk or circle of four feet radius was accurately turned, both on its face and its inner and outer edges. A roller was next provided of such diameter that it revolved sixteen times on its own axis, while rolling once round the outer edge of the circle. The roller was pivoted in a framework which could be slid freely yet lightly along the circle, the roller meanwhile revolving by frictional contact on the outer edge. The roller was also, after having been properly adjusted as to size, divided as accurately as possible into sixteen equal parts by lines parallel to its axis. While the frame carrying the roller was moved once round along the circle, the points of contact of the roller divisions with the circle were accurately observed by two microscopes attached to the frames, one of which commanded the ring on the circle near its edge, which was to receive the divisions, and the other viewed the roller divisions. The exact points of contact thus ascertained were marked with faint dots, and the meridian circle thereby divided into 256 very nearly equal parts.

The next part of the operation was to find out and tabulate the errors of these dots, which are called apparent errors, because the error of each dot was ascertained on the supposition that all its neighbors were correct. For this purpose two microscopes, which we shall call A and B, were taken with cross-wires and micrometer adjustments, consisting of a screw and head divided into 100 divisions, 50 of which read in the one and 50 in the opposite direction. These microscopes, A and B, were fixed so that their cross-wires respectively bisected the dots 0 and 128, which were supposed to be diametrically opposite. The circle was now turned half way round on its axis, so that dot 128 coincided with the wire of A, and should dot 0 be found to coincide with B, then the dots were sure to be 180° apart. If not, the cross-wire of B was moved till it coincided with the dot 0 and the number of divisions of micrometer head noted. Half this number gave clearly the error of dot 128 and was tabulated plus or minus, according as the arcual distance between 0 and 128 was found to exceed or fall short of the removing part of the circumference. The microscope B was now shifted, A remaining opposite dot 0 as before, till its wire bisected dot 64, and by giving the circle one-quarter of a

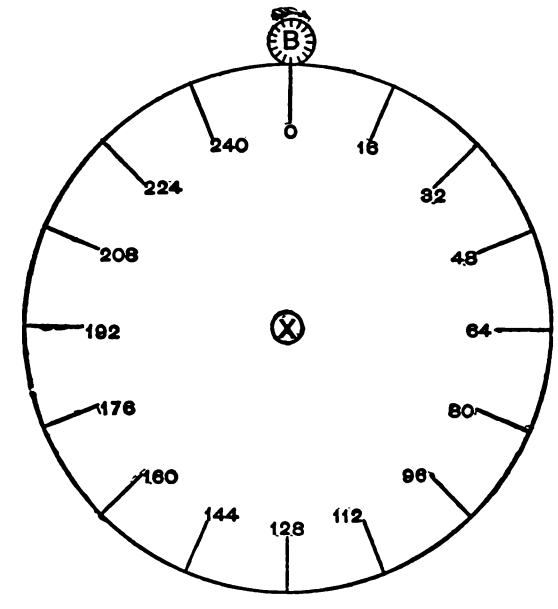

Fig. 1371.

turn on its axis, the difference of the arcs between dots 0 and 64, and between 64 and 128, was obtained. The half of this distance gave the apparent error of dot 64, which was tabulated with its proper sign. With the microscope A still in the same position, the error of dot 192 was obtained; and in the same way, by shifting B to dot 32, the errors of dots 32, 96, 160, and 224 were successively ascertained. By proceeding in this way the apparent errors of all the 256 dots were tabulated.

In order to make this method fully understood, we have prepared the accompanying diagrams, which clearly show the plan pursued.

Fig. 1371 illustrates the plan of dividing the large circle by means of the roller B.

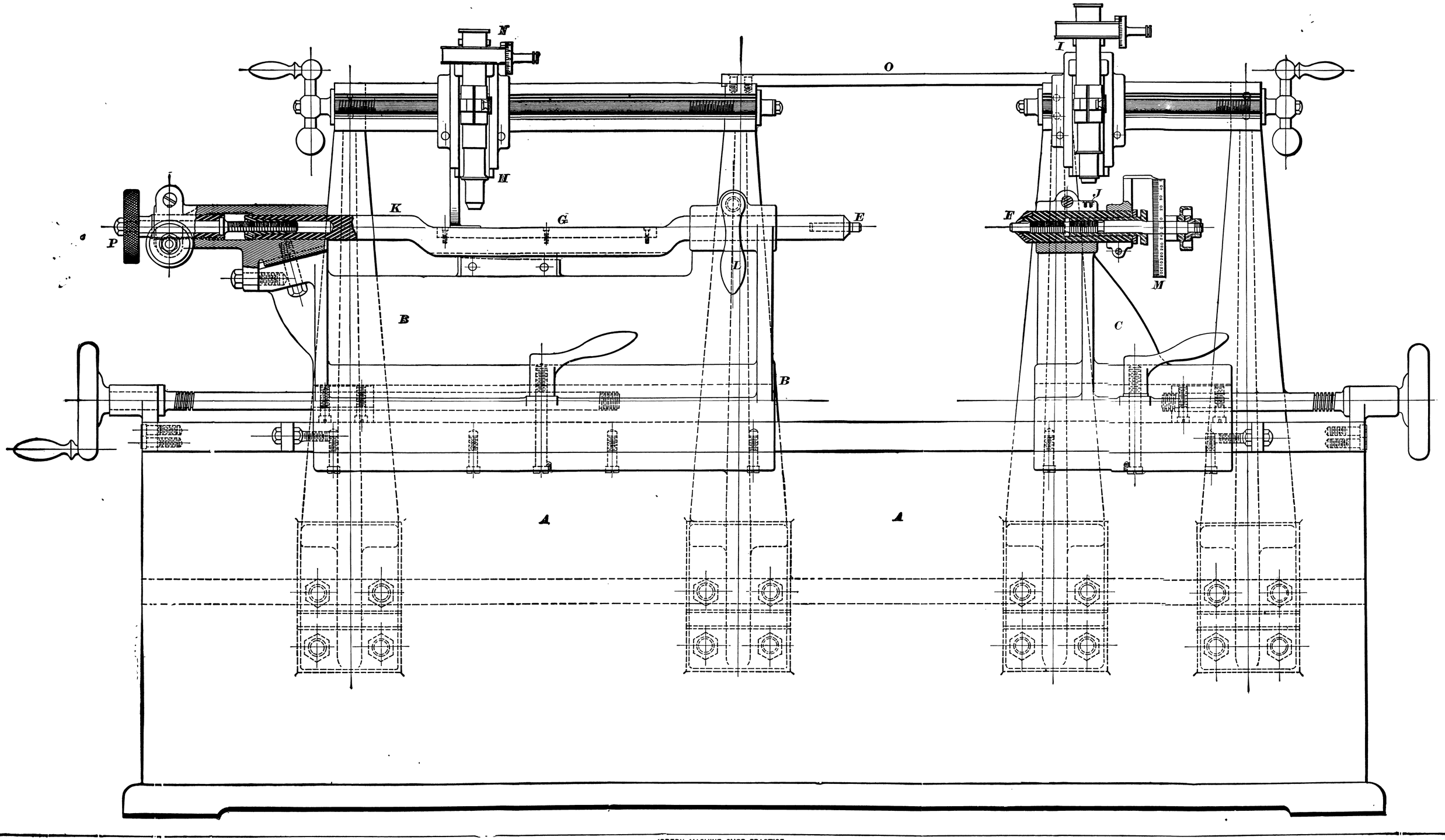
N
O
I
H
K
G
E
F
J
P
L
M
B
C
B
A
A

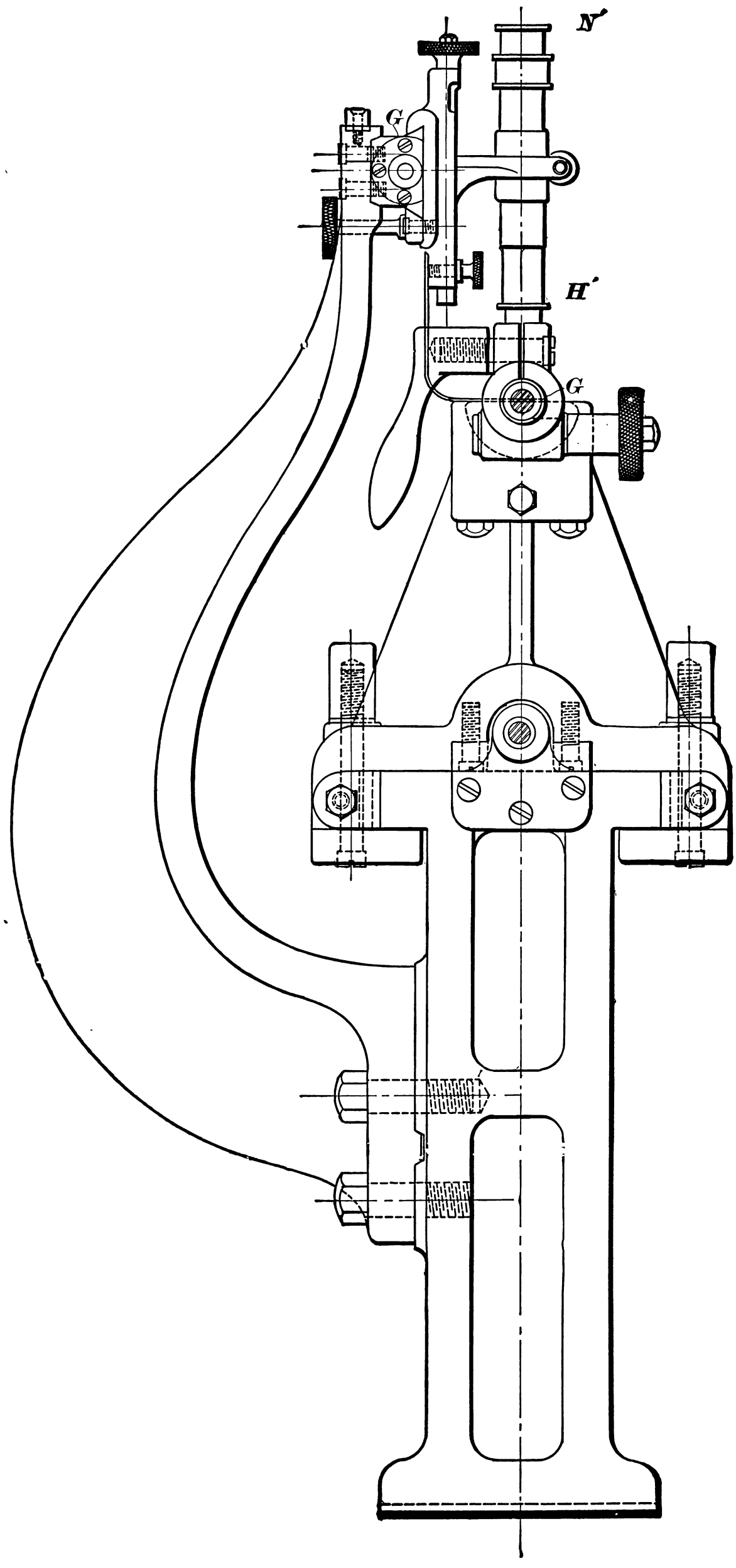
N'
G
H'
G

Fig. 1372 shows the general adjustment of the microscope for the purpose of proving the correctness of the divisions.

Fig. 1373 shows the location of the microscope over the points 0 and 128.

Fig. 1374 shows the circle turned half-way round, the points 0 and 128 coinciding with the cross threads of the microscope.

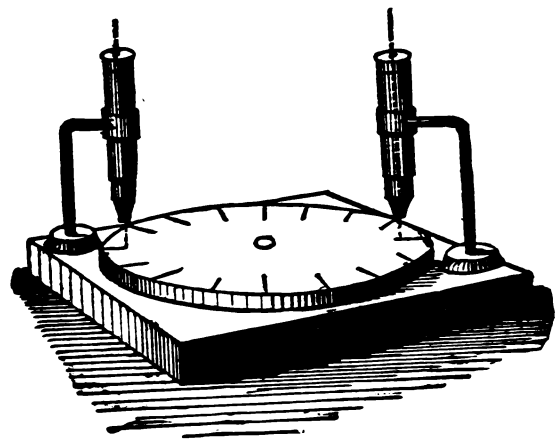

Fig. 1372.

Fig. 1375 shows a similar reading, in which the points do not coincide with the cross threads of the microscope.

Fig. 1376 shows the microscope adjusted for testing by turning the circle a quarter revolution.

Fig. 1377 represents one of the later forms of Ramsden's

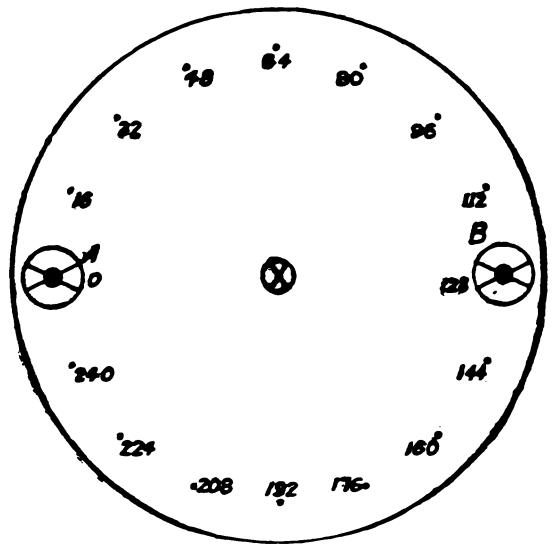

Fig. 1373.

dividing engine.* It consists first of a three-legged table, braced so as to be exceedingly stiff. Upon this is placed a horizontal wheel with deep webs, and a flat rim. The webs stiffen the wheel as much as possible, and one of these webs, which runs round the wheel about half-way between the centre and the cir-

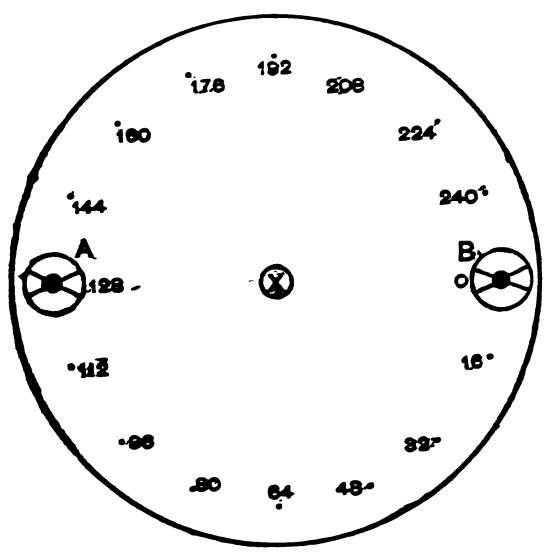

Fig. 1374.

cumference, rests upon a series of rollers which support it, and prevent, as far as possible, the arms from being deflected by their own weight. An outer circle, which receives the graduation, is laid upon the rim of the wheel and secured in place. The edge of this

* From *Mechanics.*

circle is made concave. A very fine screw, mounted in boxes and supported independently, is then brought against this hollow edge, and, being pressed against it, the screw, when revolved, of course cuts a series of teeth in the circumference, and this tooth-cutting, facilitated by having the screw threads made with teeth, was continued until perfect V-shaped teeth were cut all around the edge of the wheel. This Mr. Ramsden calls ratching the wheel. The number of teeth, the circumference of the wheel, and the pitch of the screw were all carefully adjusted, so that by using 2160 teeth, six revolutions of the screw would move the wheel the space of 1°. When this work was finished, and the adjustment had been made

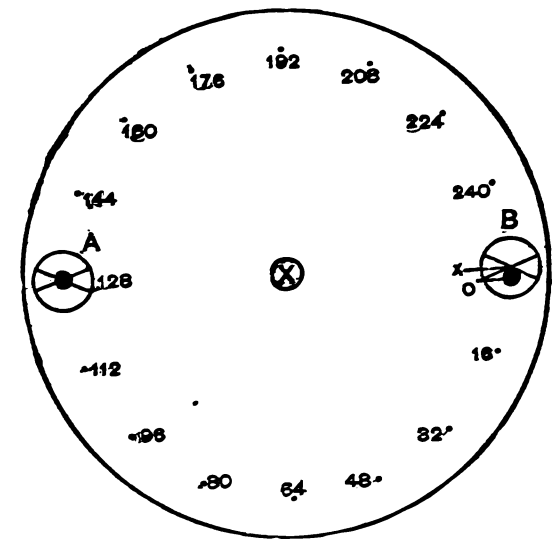

Fig. 1375.

as perfect as possible, a screw without teeth—that is, one in which the thread was perfect—was put in the place of that which had cut the teeth from the wheel, and the machine was perfected. The wheel A B C in the drawings is made of bell metal, and turns in a socket under the stand, which prevents the wheel from sliding from the supporting or friction rolls Z, Z. The centre R, working against the spindle M, is made so as to fit instruments of various sizes. The large wheel has a radius of 45 inches, and has 10 arms. The ring B is 24 inches in diameter by 3 inches deep. The ring C is of very fine brass, fitting exactly on the circumference of the wheel, and fastened by screws, which, after being screwed home, were well riveted. Great care was taken in making the centre on which the wheel worked exceedingly true and perfect, and in making the

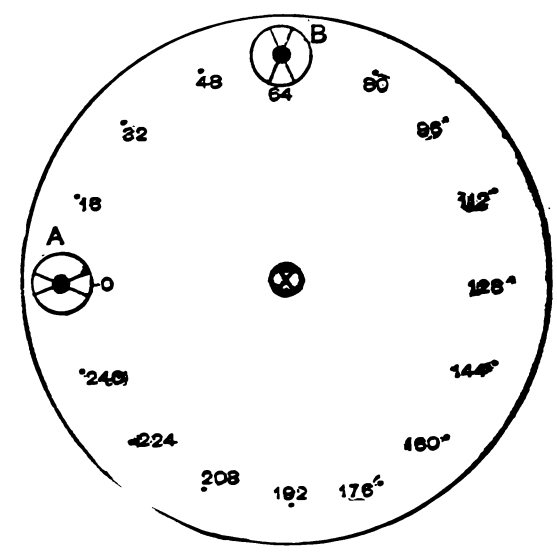

Fig. 1376.

socket for the wheel fit as exactly as possible. The revolving mechanism is all carried on the pillar P, resting on the socket C'. We may state here that the machine, as shown in the engravings, now in the possession of the Stevens Institute, is in some respects slightly improved on that shown in the original drawings published in "Rees' Cyclopædia" in 1819. After the wheel was put on its stand, and the pulleys in place, the instrument was ready for the turning mechanism. The upper part of this pillar P carries the framework in which the traversing screw revolves.

In Fig. 1378 D is the head of this pillar, P the screw which turns the wheel. E^1 E^1 are the boxes, which are made conical so as to prevent any shake and to hold the screw firmly. Circles of brass, F and V, are placed on the arbor of the screw, and as their circumference is

divided into 60 parts, each division consequently amounts to a motion of the wheel of 10 seconds, and 60 of them will equal 1 minute. Revolution is given to the screw by means of the treadle B′ and the cord Y, which runs over the guiding screw W, Fig. 1379, and is finally attached to the box U. A spring enclosed in the box U causes it to revolve, and winds up the slack of the cord whenever the treadle is relieved. In the original drawing the head of the pillar P was carried in a parallel slip in the piece surrounding its head. The construction as shown in Fig. 1379 is somewhat different. The result attained, however, is identical, and the spindles and attachments are held so as to have no lateral motion. The wheels V and X have stops upon them, so arranged that the screw may be turned definitely to a given point and stopped. These wheels are at the opposite ends of the screw W. A detail of one of them is shown at V in Fig. 1380, where X is the ratchet-wheel. This figure also illustrates the construction of the bearings for the screw arbor. We have not space to explain the method by which the perfection

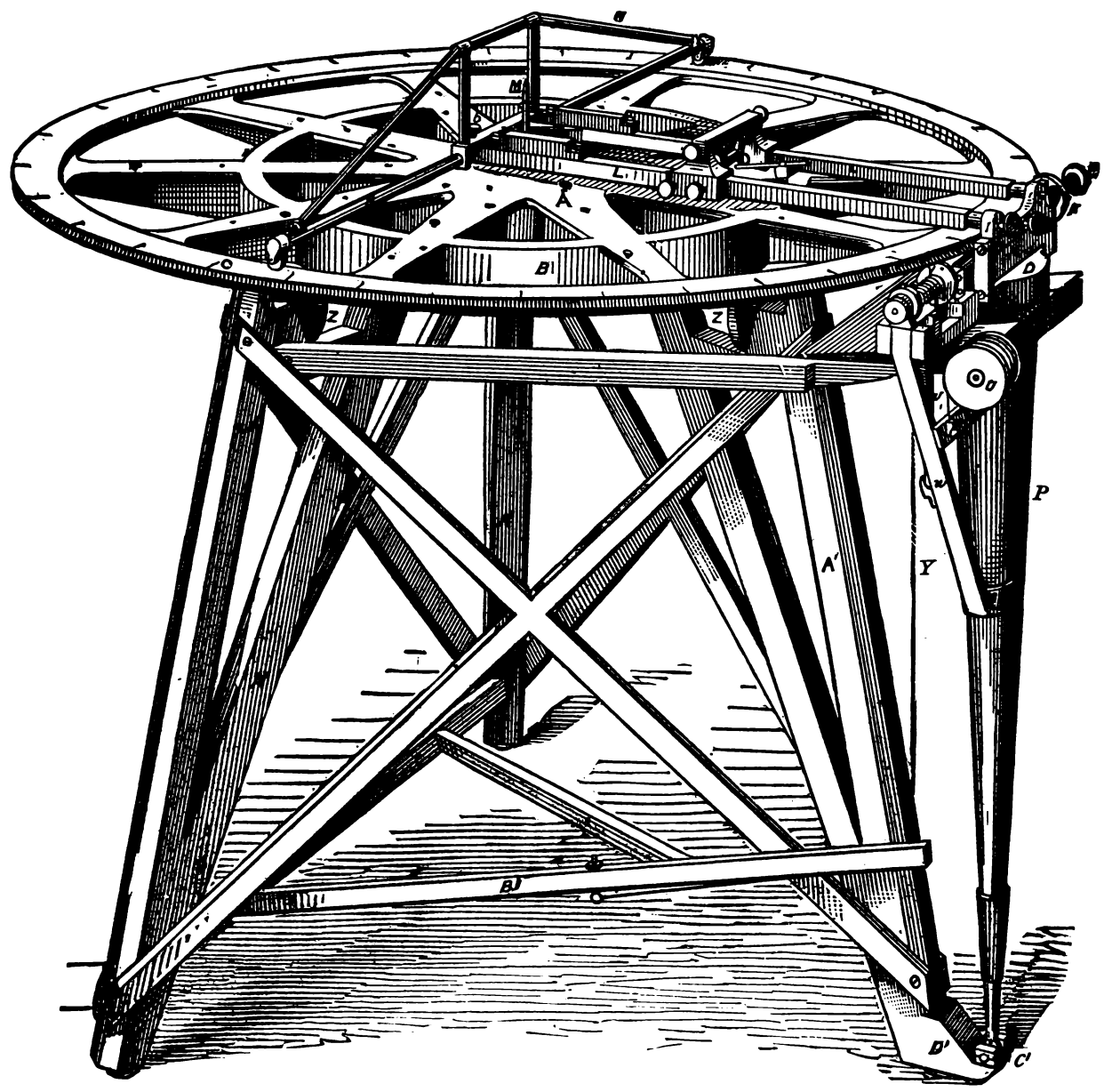

Fig. 1377.

of the screw was obtained, nor to discuss the means by which was obtained the success of so eliminating the errors as to make the division of the instrument more perfect than anything which had been attempted previously. Success, however, was obtained, and by means of the first or tooth-cutting screw the teeth were brought to such a considerable uniformity that, together with the fact that the screw took hold of a number of teeth at one time, most of the errors which would have been expected from this method of operation were eliminated. The method of ruling lines upon the instrument was most ingenious. The frame L L, is connected to the head D, of the pillar P in front, by the clamps I and K, and to the centre M by the block R. A frame N N stiffens the back. The blocks O, O on the frame Q′ are secured to the frame L L, by set-screws C, C.

Fig. 1381 shows a side view of the frame Q′, which it is seen carries a V-shaped piece Q, which in turn carries another V-shaped piece S, Fig. 1378. The piece Q is supported on pointed screws *d*, *d*, and the piece S is supported on two similar screws *f*, *f*. The point of this piece S carries the cutting tool E, Fig. 1378. Of course S can move only in a radial line from the centre M towards the circumference. If the sextant, octant, or other instrument be fastened to the large wheel A, with its centre at M, and the large wheel be rotated by the screw, all lines drawn upon it by E will be radial, and the distances apart will be governed by the number of turns made by the screw. This improvement, we think, was originated by Mr. Ramsden, and was a very great advance over the old method of the straight-edge, and has been used in some of the Government comparators and dividing engines. The following is Mr. Ramsden's own description of the graduation of the machine, and of his method of operating it. It shows the extreme care which he took in correcting the mechanical errors in the construction :—

"From a very exact centre a circle was described on the ring C, about $\frac{4}{10}$ inch within where the bottom of the teeth would come. This circle was divided with the greatest exactness I was capable of, first into five parts, and each of these into three. These parts were then bisected four times; that is to say, supposing the whole circumference of the wheel to contain 2160 teeth, this being divided into five parts, and these again divided into three parts, each third part would contain 144, and this space, bisected four times, would give 72, 36, 18, 9; therefore, each of the last divisions would contain 9 teeth. But, as I was apprehensive some error might arise from quinquesection and trisection, in order to examine the accuracy of the divisions, I described another circle on the ring C, Fig. 1378, $\frac{1}{10}$ inch within the first, and divided it by continual bisection, as 2160, 1080, 540, 270, 135, $67\frac{1}{2}$, $33\frac{3}{4}$, and, as the fixed wire (to be described presently) crossed both the circles, I could examine their agreement at every 135 revolutions (after ratching could examine it at every $33\frac{3}{4}$); but not finding any sensible difference between the two sets of divisions, I, for ratching, made choice of the former, and, as the coincidence of the fixed wire with an intersection could be more exactly determined with a dot or division, I therefore made use of intersections on both sides, before described.

"The arms of the frame L, Fig. 1381, were connected by a thin

piece of brass, $\frac{3}{4}$ inch broad, having a hole in the middle $\frac{4}{10}$ inch in diameter; across this hole a silver wire was fixed, exactly in a line to the centre of the wheel; the coincidence of this wire with the intersections was examined by a lens of $\frac{1}{10}$ inch focus, fixed in a tube which was attached to one of the arms L. Now (a handle or winch being fixed on the end of the screw) the division marked 10 on the circle F was set to its index, and, by means of a clamp and adjusting-screw for that purpose, the intersection marked 1 on the circle C' was set exactly to coincide with the fixed wire. The screw was then carefully pressed against the circumference of the wheel by turning the finger-screw *h*; then, removing the clamp, I turned the screw by its handle nine revolutions, till the intersection marked 240 came nearly to the wire. Then, turning the finger-screw *h*, I released the screw from the wheel, and turned the wheel back till the intersection marked 2 exactly coincided with the wire, and by means of the clamp before mentioned, the division 10 on the circle being set to its index, the screw was pressed against the edges of the wheel by the finger-screw *h*, the clamps were removed, and the screw turned nine revolutions, till the intersection marked 1 nearly coincided with the fixed wire; the screw was released from the wheel by turning finger-screw *h* as before, the wheel was turned back till intersection marked 3 coincided with the fixed wire; the division 10 in the circle being set to its index, the screw was pressed against the wheel as before, and the screw turned nine revolutions, till intersection 2 was nearly coincident with the fixed wire, and the screw released, and I proceeded in this manner till the teeth were marked round the whole circumference of the wheel. This was repeated three times round to make the impressions deeper. I then ratched the wheel round continuously in the same direction, without ever disengaging the screw, and, in ratching the wheel about 300 times round, the teeth were finished.

"Now, it is evident that if the circumference of the wheel was even one tooth, or ten minutes, greater than the screw would require, this error would, in the first instance, be reduced by $\frac{1}{240}$ part of a revolution, or two seconds and a half, and these errors or inequalities of the teeth were equally distributed round the wheel at the distance of nine teeth from each other. Now, as the screw in ratching had continual hold of several teeth at the same time and thus constantly changing, the above-mentioned irregularities soon corrected themselves, and the teeth were reduced to a perfect

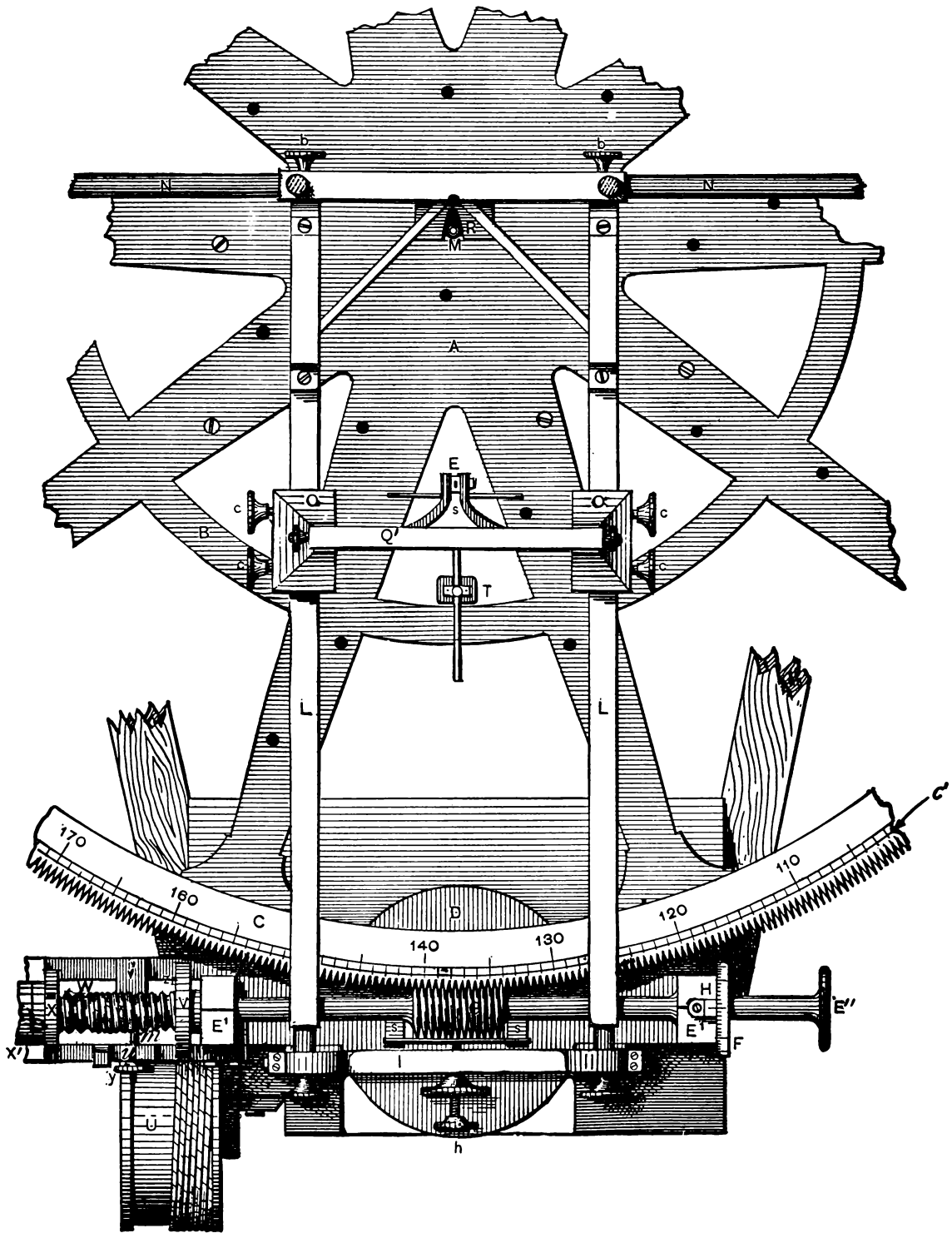

Fig. 1378.

equality. The piece of brass which carried the wire was now taken away, and the cutting-screw was also removed, and a plain one put in its place. At one end of the screw arbor, or mandrel was a small brass circle F, having its edge divided into 60 parts, numbered at every sixth division, as before mentioned. On the other end of the screw is a ratchet-wheel V (X, Fig. 1380) having 60 teeth, covered by the hollow circle (V, Fig. 1380), which carries two clicks that catch upon opposite sides of the ratchet-wheel. When the screw is to be moved forward, the cylinder W turns on a strong steel arbor E'', which passes through the piece X'; this piece, for greater firmness, is attached to the screw-frame by the braces *w*. A spiral groove or thread is cut upon the outside of the cylinder W, which serves both for holding the string and also giving motion to the lever I on its centre, by means of a

steel tooth *r*, that works between the threads of the spiral. To the lever is attached a strong steel pin *m*, on which a brass socket turns; this socket passes through a slit in the piece *u*, and may be tightened in any part of the slit by the finger-nut *y*. This piece serves to regulate the number of revolutions of the screw for each tread of the treadle B'."

Figs. 1382, 1383, and 1384 represent a method adopted to divide

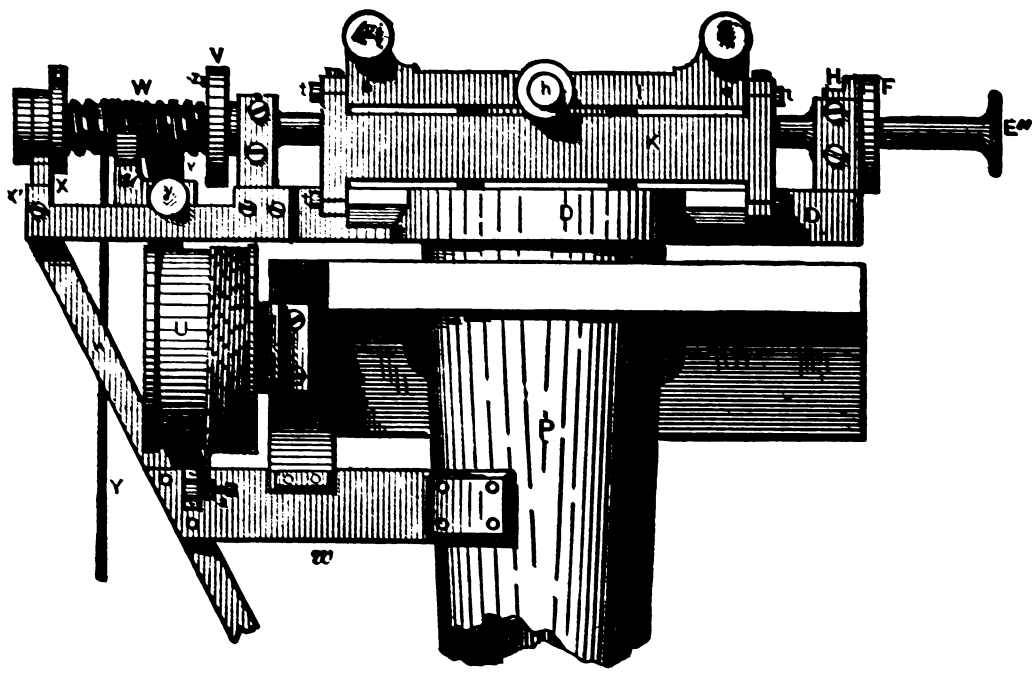

Fig. 1379.

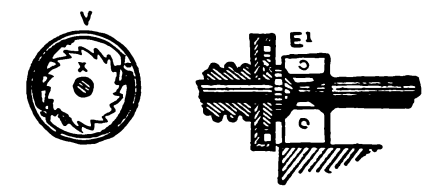

Fig. 1380.

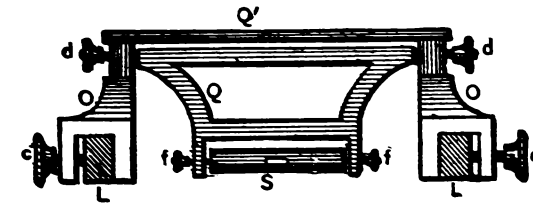

Fig. 1381.

a circle by the Pratt and Whitney Company. The principle of the device is to enable the wheel to be marked, to be moved through a part of a revolution equal to the length of a division, and to test the accuracy of the divisions by the coincidence of the line first marked with that marked last when the wheel has been moved as many times as it is to contain divisions. By this means any error in the division multiplies, so that the last division marked will exhibit it multiplied by as many times as there are divisions in the whole wheel. The accuracy of this method, so long as variations of temperature are avoided, both in the marking and the drilling of the wheel, appears to be beyond question. In the figures, W represents a segment of the wheel to be divided, and C what may be termed a dividing chuck. The wheel is mounted on an arbor in a gear-cutting machine. On the hub of the wheel (which has been turned up for the purpose) there is fitted, to a close working fit, a bore at the end of an arm, the other end of the arm being denoted by A in the figures. The dividing chuck is fitted to the slide S of the gear-cutting machine, and is of the following construction.

Between two lugs, B and B', it receives the end of arm A. These lugs are provided with set-screws, the distance between the ends of which regulate the amount of movement of the end of arm A. Upon A is the slide D, carrying the piece E, in which is the marking tool F, the latter being lifted by a spring G, and, therefore, having no contact with the wheel surface until the spring is depressed. H is an opening through the arm A to permit the marking tool F to meet the wheel face, as shown in Fig. 1384, which is an end view of the slide showing the arm A in section. The face of the wheel rests

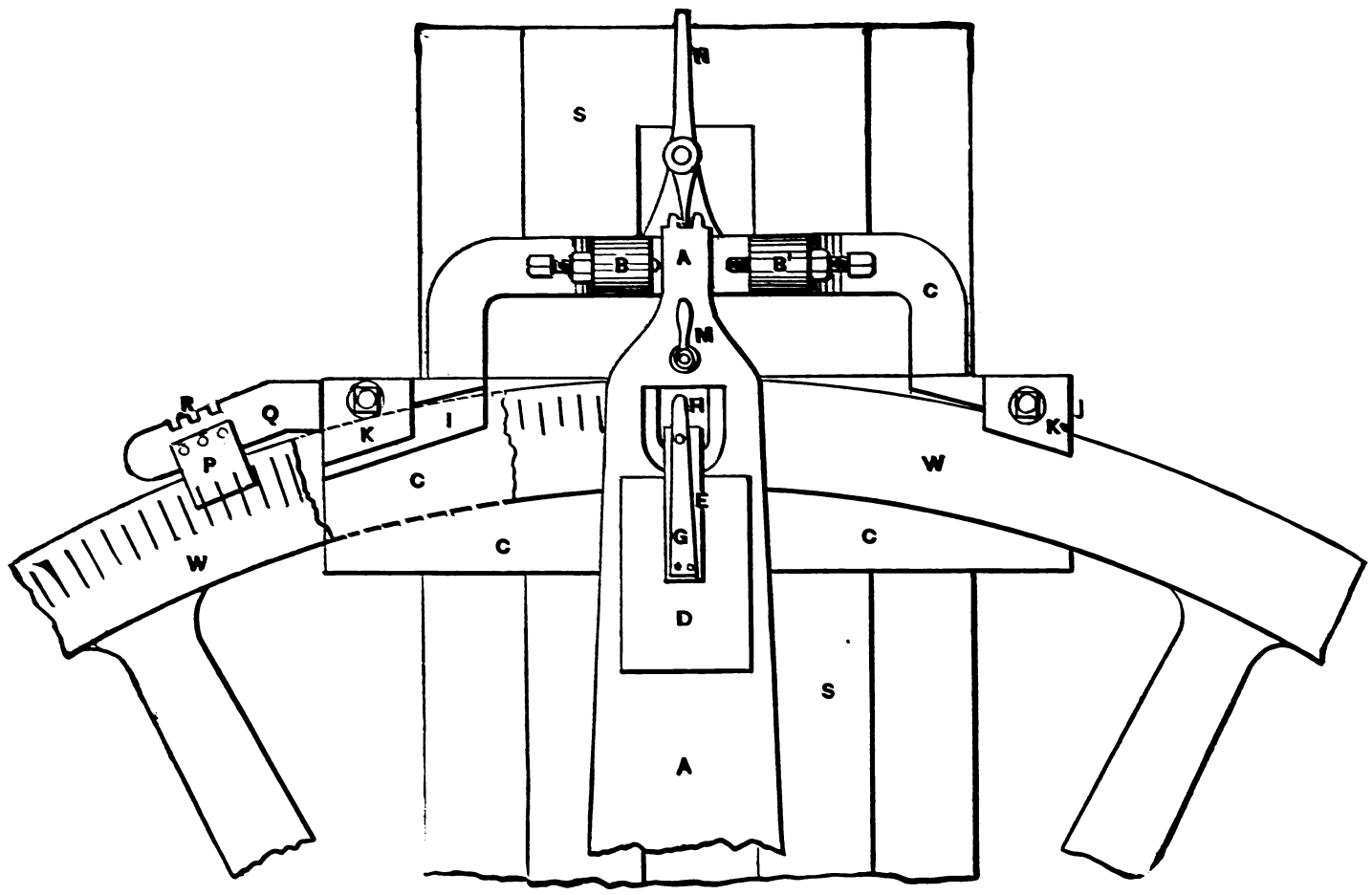

Fig. 1382.

upon the chuck on each side of the arm at the points I, J, and may be clamped thereto by the clamps K. The arm may be clamped to the wheel by the clamp shown dotted in at L, the bolt passing up and through the screw handle M. N is simply a lever with which to move the arm A, or arm A and the wheel. Suppose all the parts to be in the position shown in the cuts, the clamps being all tightened up, the slide D may be moved forward towards K, while

the spring is depressed, and F will mark a line upon the wheel. The handle M may then be released and arm A moved until it touches the set-screw in B′, when M may be tightened and another line marked. Clamps K are then tightened, and the wheel, with the arm A fast to it, moved back to the position shown in the cut, when the clamps may be tightened again and another line marked,

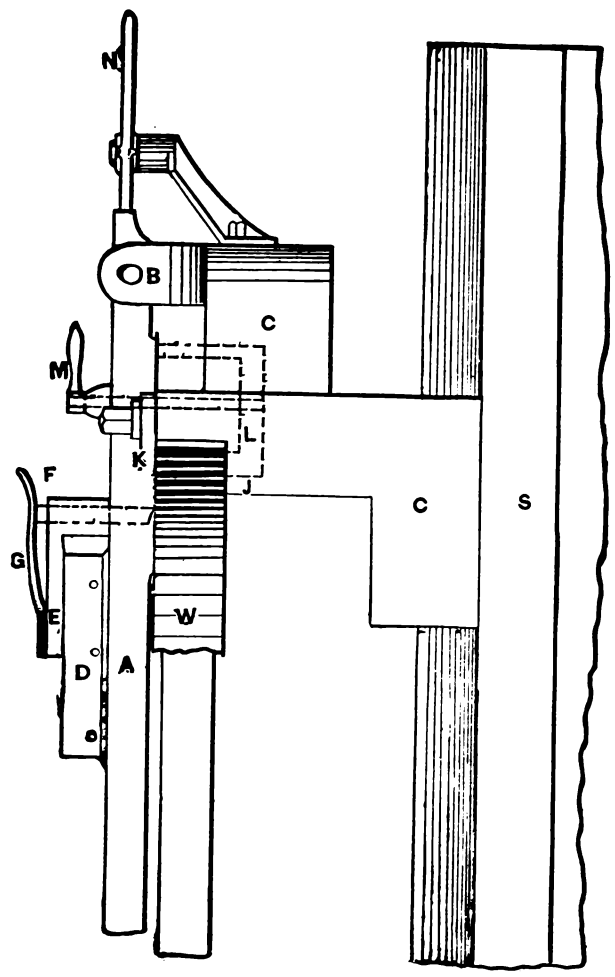

Fig. 1383.

the process being continued all round the wheel. To detect and enable the correction of any discoverable error in a division, there is provided the plate P, having upon it three lines of division (which have been marked simultaneously with three of the lines marked on the wheel). This plate is supported by an arm or bracket Q, on the rear edge of which are three notches R to hold a microscope, by means of which the lines on P may be compared with those on the wheel face, so that if any discrepancy should appear it may be determined which line is in error. The labor involved in the operation of marking a large wheel is very great. Suppose, for example, that a wheel has 200 lines of division, and that after going round the wheel as described it is found that the last division is 100th inch out; then in each division the error is the two-hundredth part of this 100th inch, and that is all the alteration that must be made in the distance between set-screws B and B′.

Figs. 1385 and 1386 represent a method of originating an index wheel, adopted by R. Hoe and Co., of New York City.

In this method the plan was adopted of fitting round a wheel 180 tapering blocks, which should form a complete and perfect circle. These blocks were to serve the same purpose as is ordinarily accomplished by holes perforated on the face of an index wheel. In their construction, means of correcting any errors that might be found, without the necessity of throwing away any portion of the work done, would also be provided. Further, this means would provide for taking up wear, should any occur in the course of time, and thus restore the original truth of the wheel.

Fig. 1385 of the engravings shows the originating wheel mounted upon a machine or cutting engine. Upon the opposite end of the shaft is the worm-wheel in the process of cutting. After the master worm-wheel has been thus prepared by means of the originating wheel, it is used upon the front end of the shaft, in the position now occupied by the originating wheel, and operated by a worm in the usual manner. Subdivisions are made by change wheels. The construction of the originating wheel will be understood by the smaller engravings.

Fig. 1386 is an enlarged section of a segment of the wheel, while Fig. 1387 is an edge view of this segment. Fig. 1388 is a view of one of the blocks employed in the construction of the wheel, drawn to full size.

In the rim of the originating wheel there was turned a shoulder, C, Fig. 1387, 5 feet in diameter. Upon this shoulder there were clamped 180 blocks, of the character shown in Fig. 1386, as indicated by the section, Fig. 1387. These blocks were secured to the face of the wheel D by screws E, and were held down to the shoulder by the screw and clamp G F, shown in Fig. 1387. (They are omitted in Fig. 1385 for clearness of illustration.) In the preparation of these blocks each was fitted to a template T, in Fig. 1388, and was provided with a recess B, to save trouble in fitting and to insure each block seating firmly on the shoulder C. The shoulder, after successive trials, was finally reduced to such a diameter that the last block exactly filled the space left for it when it was fully seated on the shoulder C. The wheel thus prepared was mounted on a Whitworth cutting engine, as shown in Fig. 1385. The general process of using this wheel is as follows: The blocks forming the periphery of the originating wheel are used in place of the holes ordinarily seen in the index plates. One of them is removed to receive a tongue, shown in the centre of Fig. 1385, which, exactly filling the opening or notch thus made, holds the wheel firmly in place. After a tooth has been cut in the master worm-wheel, shown at the back of Fig. 1385, the block in the edge of the originating wheel corresponding to the next tooth to be cut is removed. The tongue is withdrawn from the first notch, the wheel is revolved, and the tongue is inserted in the second position. The block first removed is then replaced, and the cutting proceeds as before. This operation is repeated until all the teeth in the master wheel have been cut. The space being a taper, the tongue holds the originating wheel more firmly than is possible by means of cylindrical pins fitting into holes. The number of blocks in the originating wheel being 180, the teeth cut in the master wheel may be 180 or some exact divisor of this number.

The advantages of this method of origination are quite evident. Since 180 blocks were made to fill the circle, the edges of each had 2° taper. This taper enabled the blocks to be fitted perfectly to the template, because any error in fit would be remedied by letting the block farther down into the template. Hence, it was possible to correct any error that was discovered without throwing the block away. Further, as the blocks themselves are removed to form a recess for locking the originating wheel in position while cutting the worm-wheel, the truth of the work is not subject to the errors that creep in when holes or notches require to be pierced in the originating wheel. Such errors arise from the

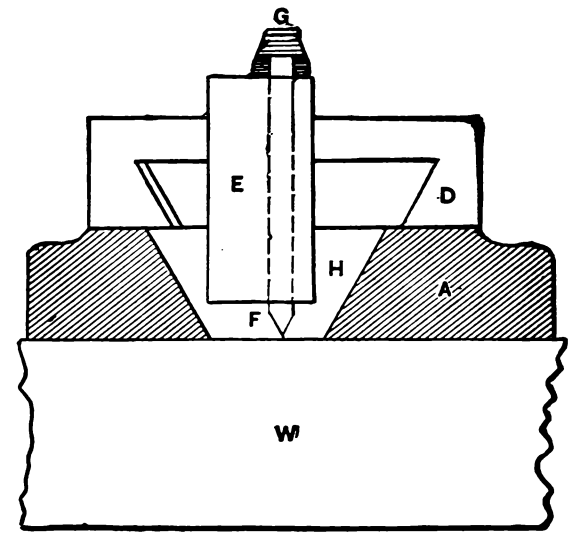

Fig. 1384.

heating due to the drilling or cutting, from the wear of the tools or from their guides, from soft or hard spots in the metal and other similar causes. To avoid any error from the heating due to the cut on the worm-wheel, in producing master wheels, Messrs. Hoe and Co. allowed the wheel to cool after each cut. The teeth were cut in the following order: The first three were cut at equidistant points in the circumference of the wheel. The next three

also were at equidistant points and midway between those first cut, and so on until all the teeth were cut.

Fig. 1389 represents a micrometer caliper for taking minute end measurements. This instrument is capable of being set to a standard measurement or of giving the actual size of a piece, and is therefore strictly speaking a combined measuring tool and a gauge. The U-shaped body of the instrument is provided with a hub *a*, which is threaded to receive a screw C, the latter being in one piece with the stem D, which envelops for a certain distance the hub *a*. The thread of C has a pitch of 40 per inch; hence one revolution of D causes the screw to move endways $\frac{1}{40}$ of an inch.

The vertical lines of division shown on the hub *a* are also $\frac{1}{40}$ of an inch apart, hence the bevelled edge of the sleeve advances one of the divisions on *a* at each rotation.

This bevelled edge is divided into 25 equal divisions round its circumference, as denoted by the lines marked 5, 10, &c. If, then, D be rotated to an amount equal to one of its points of division, the screw will advance $\frac{1}{25}$ of $\frac{1}{40}$ of an inch. In the cut, for example, the line 5 on the sleeve coincides with the zero line which runs parallel to the axial line of the hub. Now suppose sleeve D to be rotated so that the next line of division on the bevelled edge of D comes opposite to the zero line, then $\frac{1}{25}$ part of a revolution of D will have been made, and as a full revolution of D would advance the screw $\frac{1}{40}$ of an inch, then $\frac{1}{25}$ of a revolution will advance it $\frac{1}{25}$ of $\frac{1}{40}$ inch, which is $\frac{1}{1000}$ inch.

The zero line being divided by lines of equal divisions into 40ths of an inch, then, as shown in the cut, the instrument is set to measure $\frac{5}{40}$ths and $\frac{5}{25}$ths of a fortieth.

The zero line on the hub *a* stands, if the thread is true to pitch, parallel to the axis of the screw C; but if the pitch of the thread has become coarser from hardening, this zero line is marked at an angle, as shown in Fig. 1390, in which A A represents the axial line of the screw and B the zero line.

If the screw pitch becomes finer from hardening, the zero line is made at an angle in the opposite direction, as shown in Fig. 1391, the amount of the angle being that necessary to correct the error in the screw pitch. The philosophy of this is, that if the pitch has become coarser a less amount of movement of the screw is necessary, while if it has become finer an increased movement is necessary. It is obvious, also, that if the pitch of the thread should become coarser at one end and finer at the other the zero line may be curved to suit.

Various forms of micrometer calipers are shown in Plate LXVIII. in which Fig. 1 shows the gauge screw to be encased to protect from dirt or damage. In Fig. 2 a clamp screw is provided for clamping the gauge screw in any desired position. In Fig. 3 the hub at E is cut away to permit of the instrument being used close up to a shoulder. In Fig. 4 the instrument is graduated to read to ten-thousandths of an inch, the readings being obtained by means of a vernier or series of divisions on the barrel of the caliper on the side shown in cut. These divisions are ten in number and occupy the same space as nine divisions on the thimble. Accordingly, when a line on the thimble coincides with the first line of the vernier, the next two lines to the right differ from each other one-tenth of the length of a division on the thimble; the next lines differ by two-tenths, etc. See upper cut of graduations on barrel and thimble.

When the caliper is opened, the thimble is turned to the left, and when a division passes a fixed point on the barrel, it shows the caliper has been opened one-thousandth of an inch. Hence, when the thimble is turned so that a line on a thimble coincides with the second line (end of the first division) of the vernier, the thimble has moved one-tenth of the length of one of its divisions and the caliper opened one-tenth of one-thousandth, or one-ten-thousandth of an inch. When a line on the thimble coincides with the third line (end of the second division) of the vernier, the caliper has been opened to two ten-thousandths of an inch, etc. See lower cut of graduations, where a line on the thimble coincides with the fourth line (end of third division) of the vernier and the reading is three ten-thousandths of an inch.

To read the caliper, note the thousandths as usual, then count the number of divisions on the vernier, commencing at the left, until a line is reached with which a line on the thimble is coincident. If the second line, add one ten-thousandth; if the third, two ten-thousandths, etc.

Calipers graduated to ten-thousandths should not commonly be used where fine measurements are not required, as in an instrument of this class a wear is perceptible and important, which would be of comparatively slight consequence in a caliper that reads only to thousandths.

Fig. 5 (Plate LXVIII.) shows an instrument which measures any size up to two inches. Measurements up to an inch are made with the end E placed as shown in the cut, while measurements above an inch and up to two inches are made with end E pushed back to the fixed stop.

Fig. 1392 represents a vernier caliper, in which the measurement is read by the coincidence of ruled lines upon the following principle. The vernier is a device for subdividing the readings of any equidistant lines of division. Its principle of action may be explained as follows: Suppose in Fig. 1393 A to be a rule or scale divided into inches and tenths of an inch, and B a vernier so divided that its ten equidistant divisions are equal to nine of the divisions on A; then the distance apart of the lines of division on A will be $\frac{1}{10}$ inch; but, as the whole ten divisions on B measure less than an inch, by $\frac{1}{10}$ inch, then each line of division is a tenth part of the lacking tenth less than $\frac{1}{10}$ inch apart. Thus were we to take a space equal to the $\frac{1}{10}$ inch between 9 and 10 on A, and divide it into ten equal parts (which would give ten parts, each measuring $\frac{1}{100}$th of an inch), and add one of said parts to each of the distances between the lines of division on B, then the whole of the lines on A would coincide with those on B. It becomes evident, then, that line 1 on B is $\frac{1}{100}$ inch below line 1 on A, that line 2 on B is $\frac{2}{100}$ inch below line 2 on A, line 3 on the vernier B is $\frac{3}{100}$ inch below line 3 on the rule A, and so on, until we arrive at line 10 on the vernier, which is $\frac{10}{100}$ or $\frac{1}{10}$ inch below line 10 on A. Suppose, then, the rule or scale to rest vertically on a truly surfaced plate, and a piece of metal be placed beneath B, the thickness of the piece will be shown by which of the lines on B coincides with a line on A. For more minute divisions it is simply necessary to have more lines of division in a given length on A and B. Thus, if the rule be divided into inches and fiftieths, and the vernier is so divided that it has 20 equidistant lines of division to 19 lines on

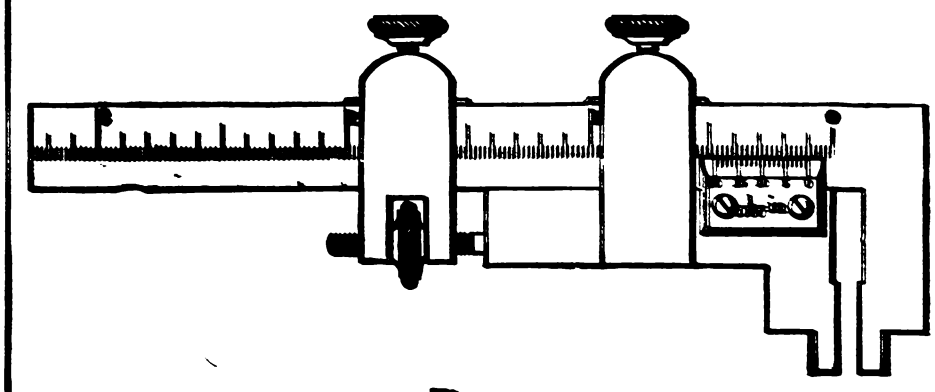

Fig. 1392.

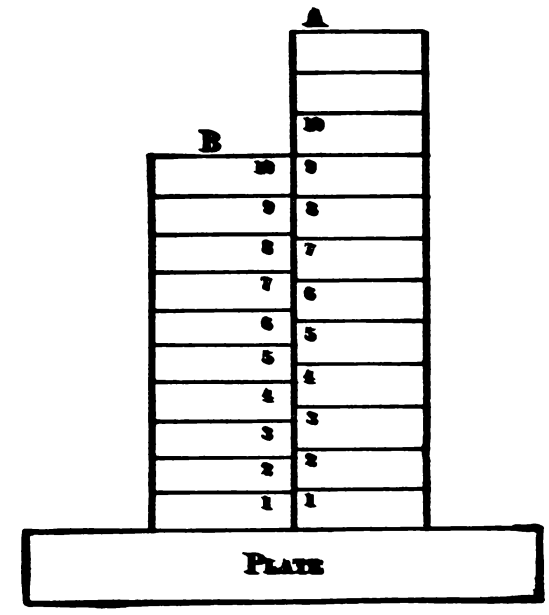

Fig. 1393.

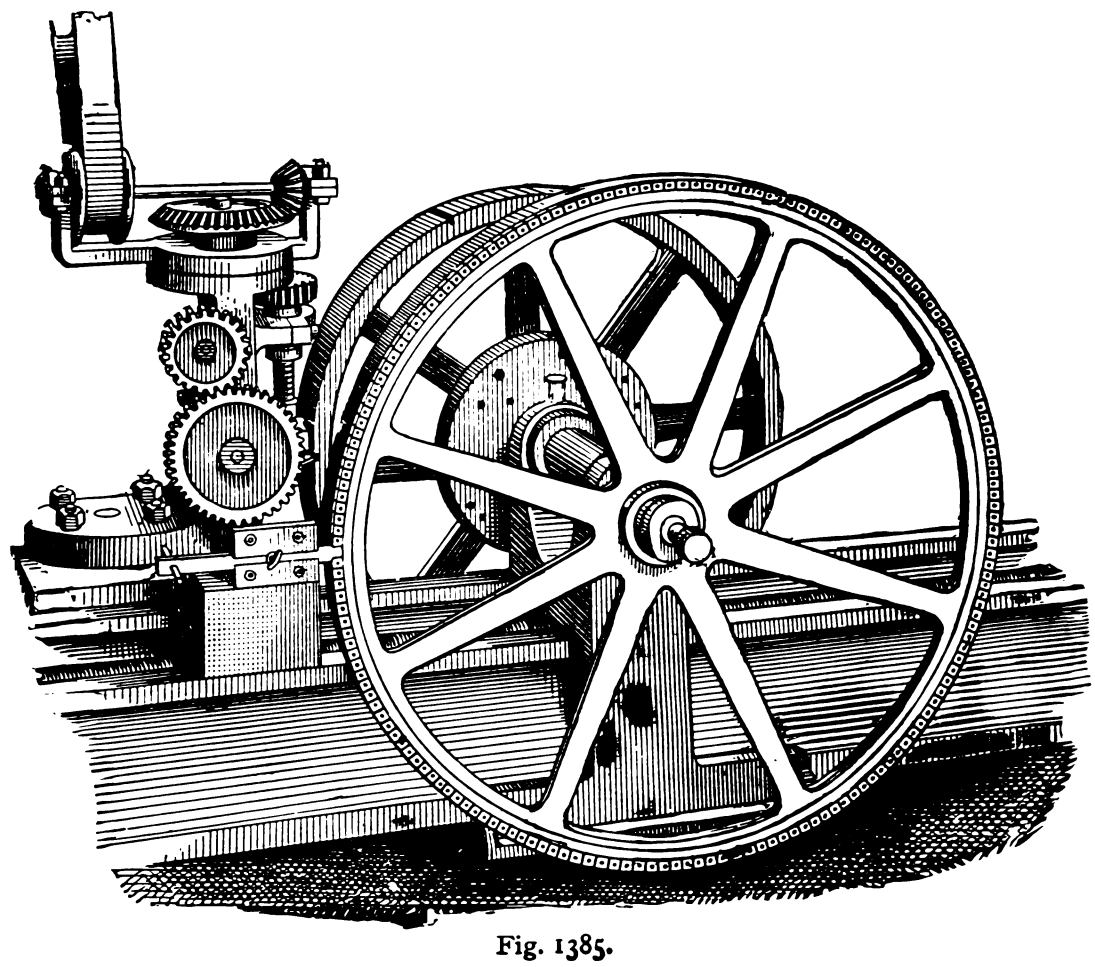

Fig. 1385.

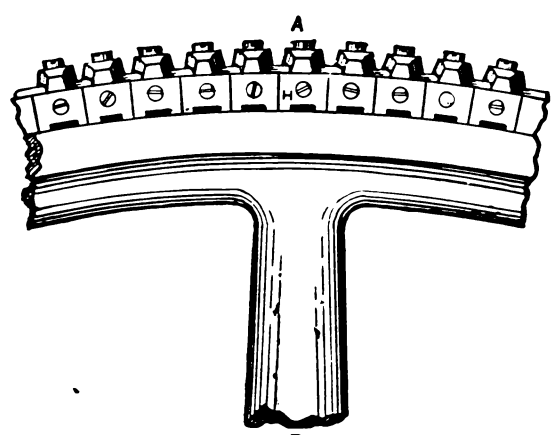

Fig. 1386.

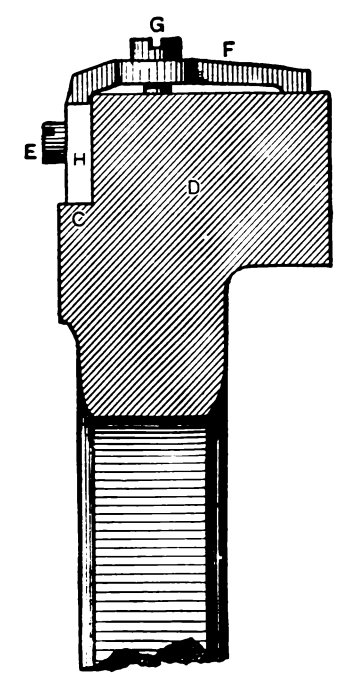

Fig. 1387.

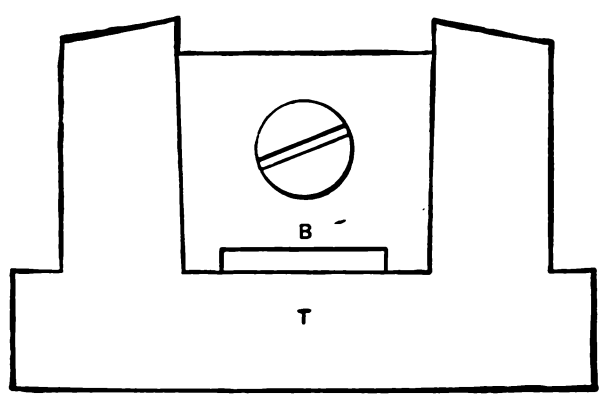

Fig. 1388.

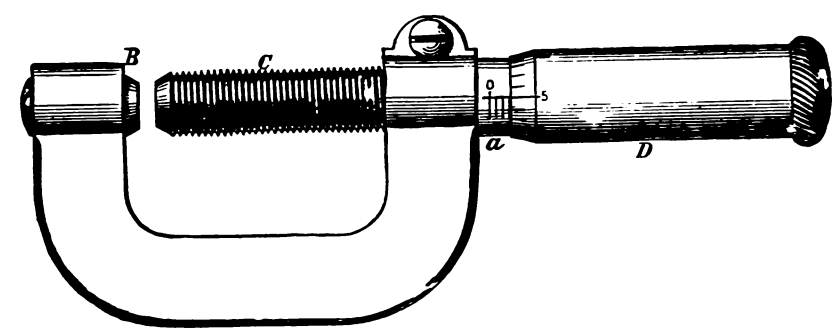

Fig. 1389.

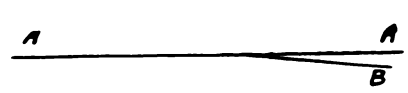

Fig. 1390.

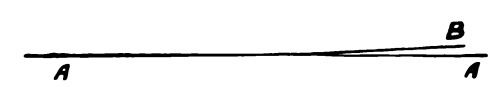

Fig. 1391.

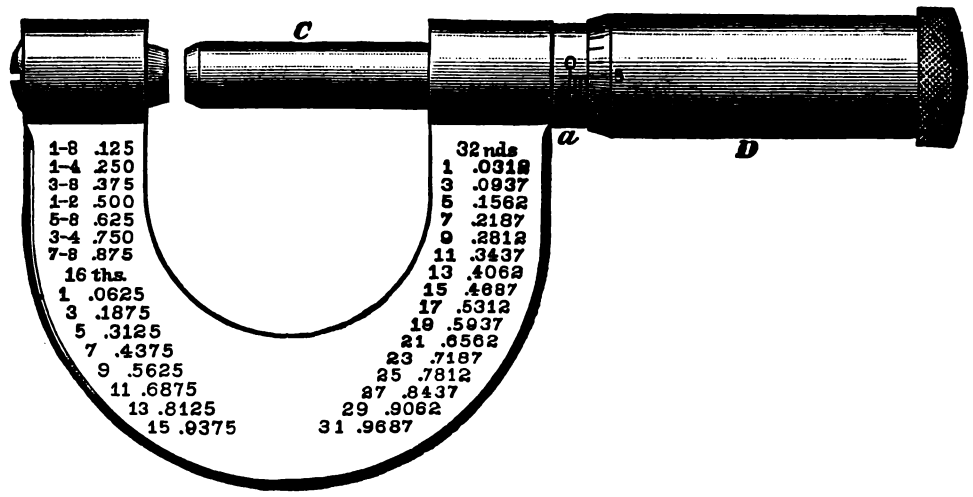

Fig. 1.

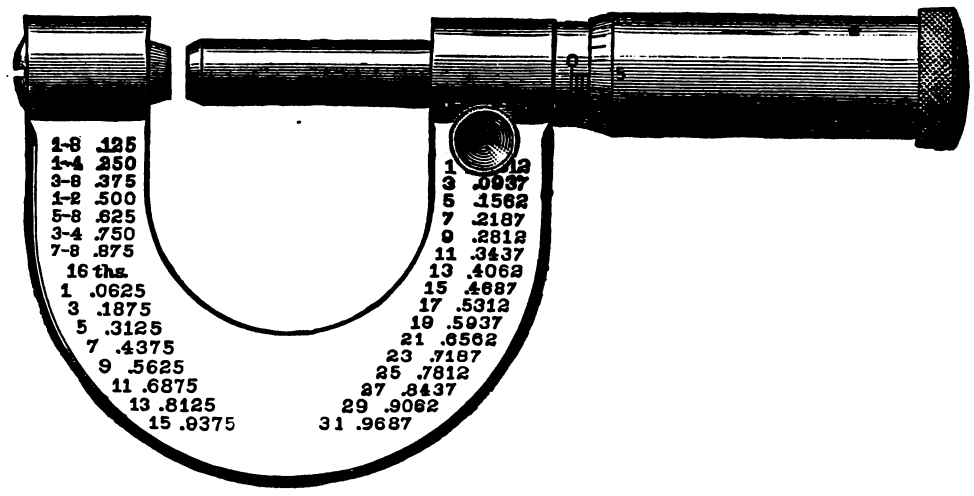

Fig. 2.

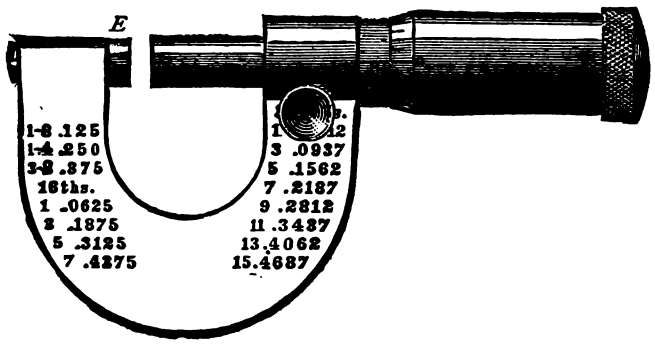

Fig. 3.

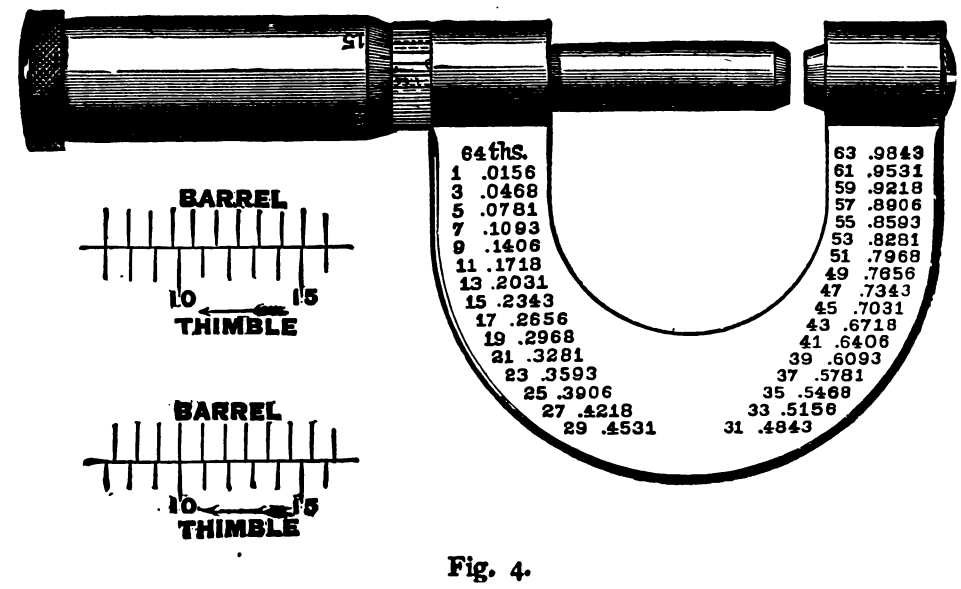

Fig. 4.

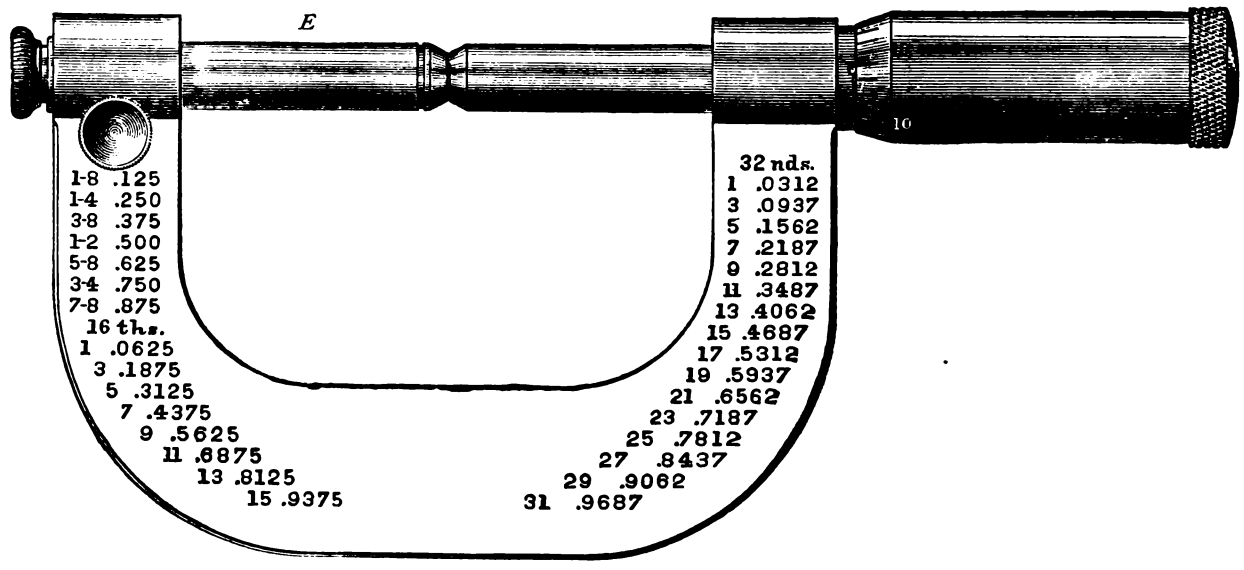

Fig. 5.

the rule, it will then lack one division, or $\frac{1}{50}$ inch in $\frac{20}{50}$ inch, each division on the vernier will then be the one-twentieth of a fiftieth too short, and as $\frac{1}{20}$ of $\frac{1}{50}$ is $\frac{1}{1000}$, the instrument will read to one-thousandth of an inch.

Let it now be noted that, instead of making the lines of division closer together to obtain minute measurements, the same end may be obtained by making the vernier longer. For example, suppose it be required to measure to $\frac{1}{2000}$ part of an inch, then, if the rule or scale be graduated to inches and fiftieths, and the vernier be graduated to have 40 equidistant lines of division, and 39 of the lines on the scale, the reading will be to the $\frac{1}{2000}$ part of an inch. But, in any event, the whole of the readings on the vernier may be read, or will be passed through, while it is traversing a division equal to one of the divisions on the scale or rule.

In Fig. 1392 is shown a vernier caliper, in which the vernier is attached to and carried by a slide operating against the inside edge of the instrument. The bar is marked or graduated on one side by lines showing inches and fiftieths of an inch, with a vernier graduated to have 20 equidistant lines of division in 19 of the lines of division on the bar, and therefore measuring to the $\frac{1}{1000}$th of an inch, while the other side is marked in millimètres with a vernier reading to $\frac{1}{40}$th millimètre, there being also 20 lines of division on the vernier to 19 on the bar.

The inside surfaces of the feet or jaws are relieved from the bar to about the middle of their lengths, so as to confine the measuring surfaces to dimensions sufficiently small to insure accurate measurement, while large enough to provide a bearing area not subject to rapid wear. If the jaw surface had contact from the point to the bar, it would be impossible to employ the instrument upon a rectangular having a burr, or slight projection, on the edge. Again, by confining the bearing area to as small limits as consistent with the requirements of durability a smaller area of the measured work is covered, and the undulations of the same may be more minutely followed.

To maintain the surface of the movable jaw parallel with that of the bar-jaw, it is necessary that the edge of the slide carrying the vernier be maintained in proper contact with the edge of the instrument, which, while adjusting the vernier, should be accomplished as follows :—

The thumb-screw most distant from the vernier should be set up tight, so that that jaw is fixed in position. The other thumb-screw should be set so as to exert, on the small spring between its end and the edge of the bar, a pressure sufficient to bend that spring to almost its full limit, but not so as to let it grip the bar. The elasticity of the spring will then hold the edge of the vernier slide sufficiently firmly to the under edge of the bar to keep the jaw-surfaces parallel; to enable the correct adjustment of the vernier, and to permit the nut-wheel to move the slide without undue wear upon its thread, or undue wear between the edge of the slide and that of the bar, both of which evils will ensue if the thumb-screw nearest the vernier is screwed firmly home before the final measuring adjustment of the vernier is accomplished.

When the measurement is completed the second thumb-screw must be set home and the reading examined again, for correctness, to ascertain if tightening the screw has altered it, as it would be apt to do if the thumb-screw was adjusted too loose.

The jaws are tempered to resist wear, and are ground to a true plane surface, standing at a right angle to the body of the bar. The method of setting the instrument to a standard size is as follows :—

The zero line marked o on the vernier coincides with the line o on the bar when the jaws are close together; hence, when the o line on the vernier coincides with the inch line on the bar, the instrument is set to an inch between the jaws. When the line next to the o line on the vernier coincides with the line to the left of the inch line on the bar, the instrument is set to $1\frac{1}{1000}$ inches. If the vernier slide then be moved so that the second line on the vernier coincides with the second line on the left of the inch on the bar, the instrument is set to $1\frac{2}{1000}$ inches, and so on, the measurement of inches and fiftieths of an inch being obtained by the coincidence of the zero line on the vernier with the necessary line on the bar, and the measurements of one-thousands being taken as described.

But if it is required to measure, or find the diameter of an existing piece of work, the method of measuring is as follows :—

The thumb-screws must be so adjusted as to allow the slide to move easily or freely upon the work without there being any play or looseness between the slide and the bar. The slide should be moved up so as to very nearly touch the work when the latter is placed between the jaws. The thumb-screw farthest from the vernier should then be screwed home, and the other thumb-screw operated to further depress the spring without causing it to lock upon the bar. The nut-wheel is then operated so that the jaws, placed squarely across the work, shall just have perceptible contact with it. (If the jaws were set to grip the work tight they would spring from the pressure, and impair the accuracy of the measurements.) The thumb-screw over the vernier may then be screwed home, and the adjustment of the instrument to the work again tried. If a correction should be found necessary, it is better to ease the pressure of the thumb-screw over the vernier before making such correction, tightening it again afterwards. The reading of the measurement is taken as follows :—

If the o line on the vernier coincides with a line on the bar, the measurement will, of course, be shown by the distance of that line from the o line on the bar, the measurement being in fiftieths of inches, or inches and fiftieths (as the case may be), but if the o line on the vernier does not coincide with any line of division on the bar, then the measurement in inches and fiftieths will be from the next line (on the bar) to the right of the vernier, while the thousandths of an inch may be read by the line on the vernier which coincides with a line on the bar.

Suppose, for example, that the zero line of the vernier stands somewhere between the 1 inch and the $1\frac{1}{50}$ inch line of division on the bar, then the measurement must be more than an inch, but less than $1\frac{1}{50}$ inches. If the tenth or middle line on the vernier is the one that coincides with a line on the bar, the reading is $1\frac{10}{1000}$ inches. If the line marked 5 on the vernier is the one that coincides with a line on the bar, the measurement is an inch and $\frac{5}{1000}$, and so on.

For measuring the diameters of bores or holes, the external edges of the jaws are employed; the width of the jaw at the ends being reduced in diameter to enable the jaw ends to enter a small hole. These edges are formed to a circle, having a radius smaller than the smallest diameter of hole they will enter when the jaws are closed, which insures that the point of contact shall be in the middle of the thickness of each jaw. In this case the outside diameter of the jaws must be deducted from the measurement taken by the vernier, or if it be required to set the instrument to a standard diameter, the zero line on the vernier must be set to a distance on the bar less than that of the measurement required to an amount equal to the diameter of the jaw edges when the jaws are closed. This diameter is, as far as possible, made to correspond to the lines of division on the bar. Thus in the instrument shown in Fig. 1392, these lines of division are $\frac{1}{50}$ inch; hence the diameter across the closed bars should, to suit the reading (for internal measurements) on the bar, be measurable also in fiftieths of an inch; but the other side of the bar is divided into millimètres, hence to suit internal measurements (in millimètres or fractions thereof) the width of the jaws, when closed, should be measurable in millimètres; hence, it becomes apparent that the diameter of the jaws used for internal measurements can be made to suit the readings on one side only of the bar, unless the divisions on one side are divisible into those on the other side of the bar. When the diameter of the jaws is measurable in terms of the lines of division on the bar, the instrument may be set to a given diameter by placing the zero of the vernier as much towards the zero on the bar as the width of the jaws when closed. Thus, suppose that width (or diameter, as it may be termed) be $\frac{10}{50}$ of an inch, and it be required to set the instrument for an inch interval or bore measurement, then the zero on the vernier must be placed to coincide with the line on the bar which denotes $\frac{40}{50}$ of an inch, the lacking $\frac{10}{50}$ inch being accounted for in the diameter or width of the two jaws.

But when the width of the jaws when closed is not measurable

in terms of the lines of division on the bar, the measurement shown by the vernier will, of course, be too small by the amount of the widths of the two jaws, and the measurement shown by the vernier must be reduced to the terms of measurement of the width of the jaws, or what is the same thing, the measurement of the diameter of the jaws must be reduced to the terms of measure-

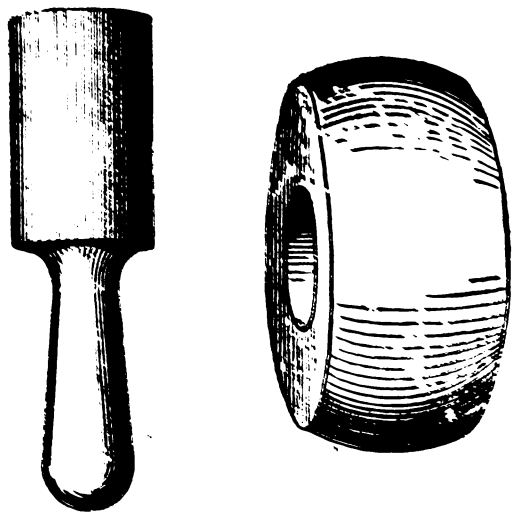

Fig. 1394.

ment on the bar, in order to subtract one from the other, or add the two together, as the case may require.

For example: Suppose the diameter of the jaws to measure, when they are close together, $\frac{350}{1000}$ of an inch, and that the bar be divided into inches and fiftieths. Now set the zero of the vernier opposite to the line denoting $\frac{18}{50}$ inch on the bar. What, then, is the measurement between the outside edges of the jaws?

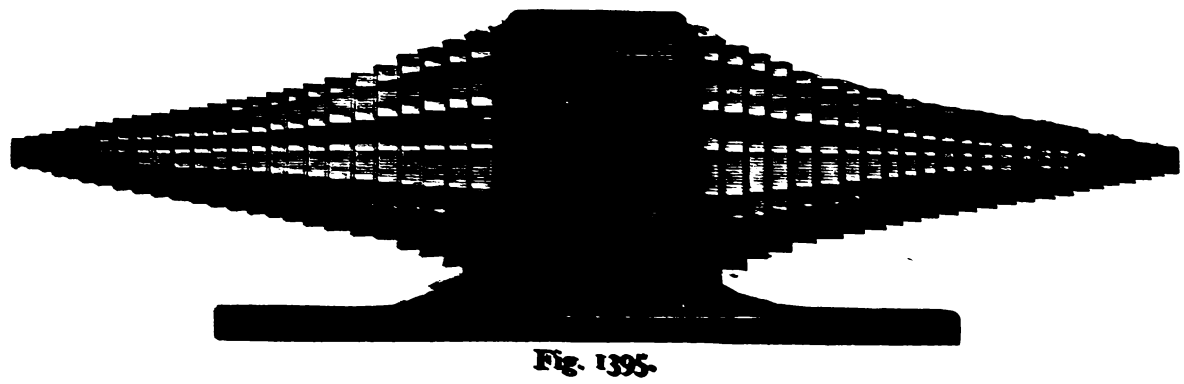

Fig. 1395.

In this case we require to add the $\frac{350}{1000}$ to the $\frac{18}{50}$ in order to read the measurement in terms of fiftieths and thousandths of an inch, or we may read the measurement to one hundredths of an inch, thus: $\frac{18}{50}$ equal $\frac{36}{100}$, and $\frac{350}{1000}$ equal $\frac{35}{100}$, and $\frac{36}{100}$ added to $\frac{35}{100}$ are $\frac{135}{100}$, or an inch and $\frac{35}{100}$. To read in $\frac{1}{1000}$ths of an inch, we have that $\frac{18}{50}$ of an inch are equal to $\frac{360}{1000}$, because each $\frac{1}{50}$ inch contains $\frac{20}{1000}$ inch, and this added to $\frac{350}{1000}$ makes $\frac{1350}{1000}$, that is $1\frac{350}{1000}$ inches.

The accuracy of the instrument may be maintained, notwithstanding any wear which may in the course of time take place on the inside faces of the jaws, by adjusting the zero line on the vernier to exactly coincide with the zero line on the bar, but the fineness of the lines renders this a difficult matter with the naked eye, hence it is desirable to read the instrument with the aid of a magnifying glass. If the outer edges of the jaws should wear, it is simply necessary to alter the allowance made for their widths.

Fig. 1304 represents standard plug and collar gauges. These tools are made to represent exact standard measurements, and obviously do no more than to disclose whether the piece measured is exactly to size or not. If the work is not to size they will not determine how much the error or difference is, hence they are gauges rather than measuring tools. It is obvious, however, that if the work is sufficiently near to size, the plug or male gauge may be forced in, or the collar or female gauge may be forced on, and in this case the tightness of the fit would indicate that the work was very near to standard size. But the use of such gauges in this way would rapidly wear them out, causing the plug gauge and also the collar to get smaller than its designated size, hence such gauges are intended to fit the work without friction, and at the same time without any play or looseness whatever. Probably the most accurate degree of fit would be indicated when the plug gauge would fit into the collar sufficiently to just hold its own weight when brought to rest while within the collar, and then slowly fall through if put in motion within the collar. It is obvious that both the plug and the collar cannot theoretically be of the same size or one would not pass within the other, but the difference that is sufficient to enable this to be done is so minute that it is practically too small to measure and of no importance.

When these gauges are used by the workmen, to fit the work to their wear is sufficient to render it necessary to have some other standard gauge to which they can be from time to time referred to test their accuracy, and for this purpose a standard such as in Fig. 1395 may be employed. It consists of a number of steel disks mounted on an arbor and carefully ground after hardening each to its standard size.

But a set of plug and collar gauges provide within themselves to a certain extent the means of testing them. Thus we may take a collar or female gauge of a certain size and place therein two or three plug gauges whose added diameters equal that of the female or collar gauge.

In Fig. 1396, for example, the size of the female gauge A being $1\frac{1}{2}$ inches, that of the male B may be one inch, and that of C $\frac{1}{2}$ an inch, and the two together should just fit the female. On the other hand, were we to use instead of B and C two males, $\frac{7}{8}$ and $\frac{5}{8}$ inches respectively, they should fit the female; or a $\frac{1}{2}$ inch, a $\frac{5}{8}$ inch and a $\frac{3}{8}$ inch male gauge together should fit the female. By a series of tests of this description, the accuracy of the whole set may be tested; and by judicious combinations, a defect in the size of any gauge in the set may be detected.

The wear of these gauges is the most at their ends, and the fit may be tested by placing the plug within the collar, as in Fig. 1397, and testing the same with the plug inserted various distances within the collar, exerting a slight pressure first in the direction of A and then of B, the amount of motion thus induced in the plug denoting the closeness of the fit.

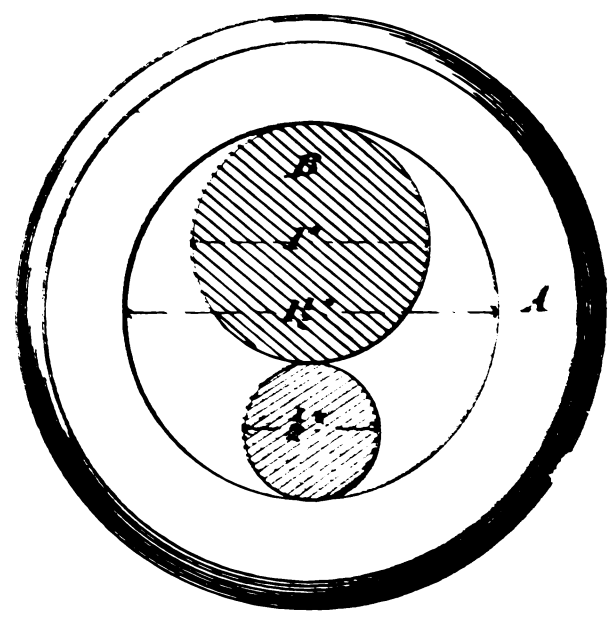

Fig. 1396.

In trying the fit of the plug by passing it well into or through the collar, the axis of the plug should be held true with that of the collar, and the plug while being pressed forward should be slightly rotated, which will cause the plug to enter more true and therefore more easily. The plug should be kept in motion and not allowed

to come to rest while in the collar, because in that case the globules of the oil with which the surfaces are lubricated maintain a circular form and induce rolling friction so long as the plug is kept in motion, but flatten out, leaving sliding friction, so soon as the plug is at rest, the result being that the plug will become too tight in the collar to permit of its being removed by hand.

The surfaces of both the plug and the collar should be very carefully cleaned and oiled before being tried together, it being found that a film of oil will be interposed between the surfaces,

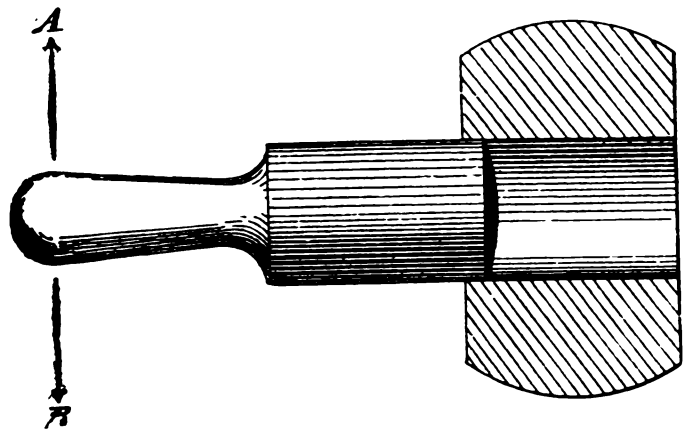

Fig. 1397.

notwithstanding the utmost accuracy of fit of the two, and this film of oil prevents undue abrasion or wear of the surfaces.

When great refinement of gauge diameter is necessary, it is obvious that all the gauges in a set should be adjusted to diameter while under an equal temperature, because a plug measuring an inch in diameter when at a temperature of, say, 60° will be of more than an inch diameter when under a temperature of, say, 90°.

It follows also that to carry this refinement still farther, the work to be measured if of the same material as the standard gauge should be of the same temperature as the gauge, when it will fit the gauge if applied under varying temperatures; but if a piece of work composed, say, of copper, be made to true gauge diameter when both it and the gauge are at a temperature of, say, 60°, it will not be to gauge diameter, and will not fit the gauge, if both be raised to 90° of temperature, because copper expands more than steel.

To carry the refinement to its extreme limit then, the gauge should be of the same metal as the work it is applied to whenever the two fitting parts of the work are of the same material. But suppose a steel pin is to be fitted as accurately as possible to a brass bush, how is it to be done to secure as accurate a fit as possible under varying temperatures? The two must be fitted at some equal temperature; if this be the lowest they will be subject to, the fit will vary by getting looser, if the highest, by getting tighter; in either case all the variation will be in one direction. If the medium temperature be selected, the fit will get tighter or looser as the temperature falls or rises. Now in workshop practice, where fit is the object sought and not a theoretical standard of size, the range of variation due to temperature and, generally, that due to a difference between the metals, is too minute to be of practical importance. To the latter, however, attention must, in the case of work of large diameter, be paid: thus, a brass piston a free fit at a temperature of 100° to a 12-inch cast-iron cylinder, will seize fast when both are at a temperature

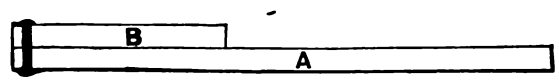

Fig. 1398.

of, say, 250°. In such cases an allowance is made in conformity with the co-efficients of expansion.

In the case of the gauges, all that is practicable for ordinary work-shop variation of temperature is to make them of one kind and quality of material—as hard as possible and of standard diameter, when at about the mean temperature at which they will be when in use. In this case the limit of error, so far as variation from temperature is concerned, will be simply that due to the varying co-efficients of expansion of the metals of which the work is composed.

To provide a standard of lineal measurement which shall not vary under changes of temperature it has been proposed to construct a gauge such as shown in Fig. 1398, in which A and B are bars of different metals whose lengths are in the inverse ratio of their co-efficients of expansion. It is evident that the difference of their lengths will be a constant quantity, and that if the two bars be fastened together at one end, the distance from the free end of B to the free end of A will not vary with ordinary differences in temperature.

Plug and collar gauges may be used for taper as well as for parallel fits, the taper fit possessing the advantage that the bolt or pin may be let farther into its hole to take up the wear. In a report to the Master Mechanics Association upon the subject of the propriety of recommending a standard taper for bolts for locomotive work, Mr. Coleman Sellers says:—

"As the commission given to me calls for a decision as to the taper of bolts used in locomotive work, it presupposes that taper bolts are a necessity. In our own practice we divide bolts into several classes, and our rule is that in every case where a through bolt can be used it must be used. If we cannot use a through bolt we use a stud, and where a stud cannot be used we put in a tap bolt, and the reason why a tap bolt comes last is because it is part and parcel of the machine itself. There are also black bolts and body bound bolts, the former being put into holes $\frac{1}{16}$ inch larger than the bolt. It is possible in fastening a machine or locomotive together to use black bolts and body bound bolts. With body bound bolts it is customary for machine builders to use a straight reamer to true the hole, then turn the bolt and fit it into its place. It is held by many locomotive builders that the use of straight bolts is objectionable, on the score that if they are driven in tight there is much difficulty in getting them out, and where they are got out two or three times they become loose, and there is no means of making them tighter.

"There is no difficulty in making two bolts of commercially the same size. But there is a vast difference between absolute accuracy and commercial accuracy. Absolute accuracy is a thing that is not obtainable. What we have to strive for, then, is commercial accuracy. What system can we adopt that will enable workmen of limited capacity to do work that will be practically accurate? The taper bolt for certain purposes presents a very decided advantage. Bolts may be made practically of the same diameter, but holes cannot be made practically of the same diameter. Each one is only an approximation to correctness. We have here an ordinary fluted reamer (showing an excellent specimen of Betts Machine Company's make). That reamer is intended to produce a straight hole, but having once passed through a hole the reamer will be slightly worn. The next time you pass it through it is a little duller, and every time you pass it through the hole must become smaller. There have been many attempts made to produce a reamer that should be adjustable. That, thanks to the gentlemen who are making such tools a speciality, has added a very useful tool to the machine shop—a reamer where the cutters are put in tapered and can be set up and the reamer enlarged and made to suit the gauge. This will enable us to make and maintain a commercially uniform hole in our work. But the successful use of a reamer of this kind depends upon the drill that precedes this reamer being made as nearly right as possible, so that the reamer will have little work to do. The less you give a reamer to do the longer it will maintain its size.

"The question of tapered bolts involves at once this difficulty: that we have to drill a straight hole, then the tapered reamer must take out all the metal that must be removed in order to convert a straight into a tapered hole. The straight hole is maintained in its size by taking out the least amount of metal. It follows that the tapered reamer would be nearest right which would also take out the least amount of metal.

"Then you come to the question of the shape of the taper. When I was engaged building locomotives in Cincinnati, a great many years ago, we used bolts the taper of which was greater than I shall recommend to you. In regard to the compression that would take place in bolts, no piece of iron can go into another piece of iron without being smaller than the hole into which it is intended to go. If it is in any degree larger, it must

compress the piece itself or stretch the material that is round it. So, if you adopt a tapered bolt, you cannot adopt a certain distance that it shall stand out before you begin to drive it, for there will be more material to compress in a large piece than in a small one. Metal is elastic. Within the elastic limit of the metal you may assume the compression to be a spring. In a large bolt you have a long spring, and in a short one you have a short spring. If you drive a half-inch bolt into a large piece of iron, it is the small bolt which you compress; therefore the larger the bolt the more pressure you can give to produce the

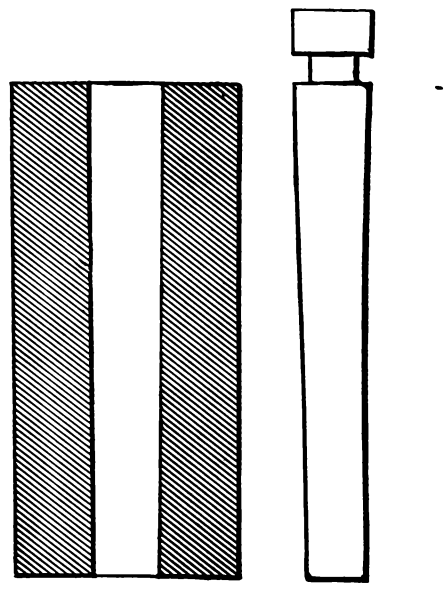

Fig. 1399.

same result. Hence, if you adopt the taper bolt, you will have to use your own discretion, unless you go into elaborate experiments to show how far the bolt head should be away from the metal when you begin to drive it.

"Certain builders of locomotives put their stub ends together with tapered bolts, but do not use tapered bolts in any other part of the structure. The Baldwin Works use tapered bolts wherever they are body bound bolts. They make a universal taper of $\frac{1}{16}$ inch to the foot. An inch bolt 12 inches long would be $1\frac{1}{16}$ inches diameter under the head. They make all their bolts under 9 inches long $\frac{1}{16}$ larger under the head than the name of the bolt implies. Thus a $\frac{3}{4}$ inch bolt would be $\frac{13}{16}$ inch under the head, provided it was 9 inches long or under. Anything over 9 inches long is made $\frac{1}{8}$ inch larger under the head, and still made a taper of $\frac{1}{16}$ inch to the foot. A locomotive builder informs me that a taper of $\frac{1}{8}$ inch to the foot is sometimes called for, and the Pennsylvania road calls for $\frac{3}{32}$ inch to the foot. But the majority of specifications call for $\frac{1}{16}$ inch to the foot. The advantage of $\frac{1}{16}$ inch taper lies in the fact that a bolt headed in the ordinary manner can be made to fill the requirements, provided it is made of iron. You may decide that bolts should be tapered, for the reason that when a tapered bolt is driven into its place it can be readily knocked loose, or if that bolt, when in its place, proves to be too loose, you have merely to drive it in a little farther: these are arguments in favor of tapered bolts, showing their advantage. It is easier to repair work that has tapered bolts than work that has straight bolts. If you adopt a tapered bolt, say, with a taper of $\frac{1}{16}$ inch to the foot, you are going to effect the making of those bolts and the boring of those holes in a commercially accurate manner, so that they can be brought into the interchangeable system. To carry this out, you require some standard to start with, and the simplest system that one can conceive is this: Let us imagine that we have a steel plug and grind it perfectly true. We have the means of determining whether that is a taper of $\frac{1}{16}$ inch, thanks to the gentlemen who are now making these admirable gauges. We have a lathe that can turn that taper. I think if you go into the manufacture of these bolts, you will be obliged to use a lathe which will always turn a uniform taper. Having made a female gauge, Fig. 1399, 8 inches long and $1\frac{1}{16}$ inches diameter with a taper of $\frac{1}{16}$ inch to the foot, this is the standard of what? The area of the bolt, not of the hole it goes into. We now make a plug, Fig. 1399 Taking that tapered plug we should be able to drop it into the nole. Your taper reamer is made to fit this, but you require to know how deep the hole should be. Remember, I said this is the gauge that the bolts are made by. Now let us suppose that we have this as a standard, and to that standard these reamers are made. We decide by practice how much compression we can put upon the metal. For inch bolts, and, say, all above $\frac{1}{2}$ inch, we might, say, allow the head to stand up $\frac{1}{8}$ of an inch. Let us make another female gauge like Fig. 1399, but turned down $\frac{1}{8}$ of an inch shorter. We then shall have the hole smaller than it was before. It is this degree smaller, ·0065 of an inch; that is a decimal representing how much smaller that hole is when you have gone down $\frac{1}{8}$ of an inch on a taper of $\frac{1}{16}$ inch to the foot.

"Having got this tapered plug, you then must have the means of making the bolts commercially accurate in the shop. For that purpose you must have some cast-iron plugs. Those are reamed with a reamer that has no guard on it, but is pushed into it until the plug—this standard plug—is flush with the end of it. If you go in a little too far it is no matter. Having produced that gauge, we gauge first the one that is used on the lathe for the workman to work by, and he will fit his bolt in until the head will be pushed up against it. If you have a bolt to make from a straight piece of iron, I should advise its being done in two lathes. Here are those beautiful gauges of the Pratt and Whitney Company, which will answer the present purpose; one of these gauges measuring what the outside of the bolt will be, the other gauge $\frac{1}{16}$ of an inch larger will mark the part under the head. Messrs. Baldwin have a very good system of gauges. All the cast-iron plugs which they use for this purpose are square. Holes are cut in the blocks the exact size of the bolts to be turned up as shown in Fig. 1400. The object of this is that there shall be no mistake as to what the gauge is. These gauges can be readily maintained, because they have to go back into the room to the inspector. He puts this plug in. If it goes in and fits flush, it is all right. If the plug goes in too far, it is worn. He then turns a little off the end and adjusts it.

"Now practically through machine shops we find that we have to use cast-iron gauges. We take, for instance, 2-inch shafting. Shafting can only be commercially accurate. Therefore we make cast-iron rings and if those rings will go on the shafting it is near enough accurate for merchantable purposes. But this ring will wear in a certain time. Therefore it must not be used more than a certain number of days or hours. Here you have a system that is simple in the extreme. You have all this in two gauges, one gauge being made as a mere check on that tapered plug

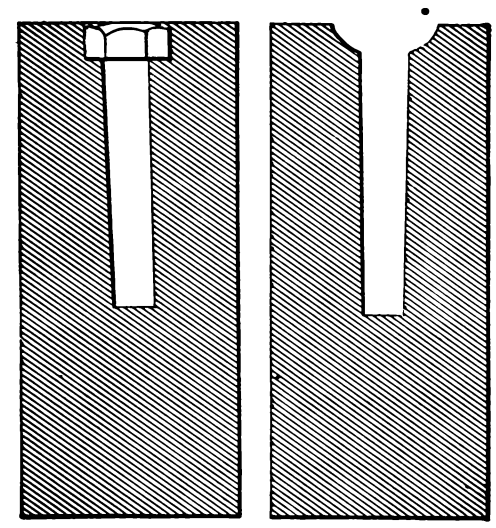

Fig. 1400.

which is the origin of all things, the origin being $\frac{1}{8}$ or $\frac{1}{16}$, or $\frac{1}{4}$ of an inch shorter if the bolt is very large. There is where you have to use your own judgment. But having adopted something practical you then can use your reamer which is necessary to produce a hole of a given size. If this reamer wears, you then turn off this wrought-iron collar far enough back to let it go in that much farther. I know of no other way by which you can accomplish this result so well as by that in use at the Baldwin Locomotive Works. I think that the system originated with Mr. Baldwin himself.

"I do not feel disposed to recommend to you any particular taper to be adopted, because it is not a question like that of screw-threads. In screw-threads we throw away the dies that are used upon bolts, which are perishable articles. The taper that has once been adopted in locomotive establishments is a perpetual thing. If the Pennsylvania railroad and all its branches have adopted $\frac{3}{32}$, it is folly to ask them to change it to $\frac{1}{16}$ of an inch, because their own connections are large enough to make them independent of almost any other corporation, and the need of absolute uniformity in their work would cause them to stick to that particular thing. Any of you having five, six, seven, or two or three hundred engines, must make up your minds what you will do. When we adopt a standard for screw-threads, a screw-thread is adopted which has a manifest advantage. A bolt that has one screw thread can be used on any machine. But once having adopted a taper on a road, it is very difficult to make a change; and whether it is wisdom for this Association to say that thus-and-so shall be the standard taper, is a question I am unable to answer. Therefore I am unwilling to present any taper to you, and only present the facts, but will say that $\frac{1}{16}$ inch is enough. The less taper you have the less material you have to cut away. But to say that $\frac{1}{16}$ inch is preferable to $\frac{1}{32}$ inch is folly, because no human being could tell the difference. If a bolt has 5° taper on the side, it may set in place; if it has 7°, it may jump out. That is the angle of friction for iron or other metals. Five degrees would be an absurd angle for a taper bolt. Anything, then, that will hold; that is, if you drive the bolt it will set there.

"This presentation may enable you to arrive at some conclusion. Nothing is more desirable than an interchangeable system. In making turning lathes we try to make all parts interchangeable, and we so fit the sliding spindle. Every sliding

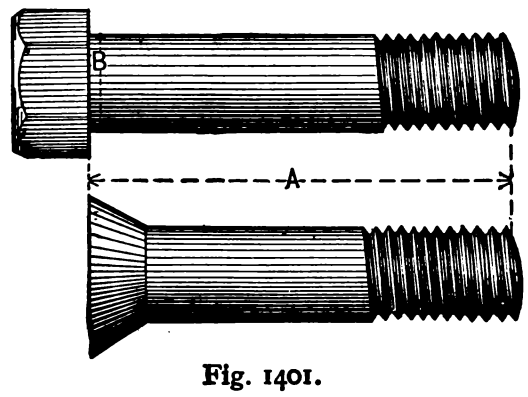

Fig. 1401.

spindle in the dead head of the lathe has to be fitted into its own place. We know of no method of making all holes of exactly the same size that shall be commercially profitable. The only way we could surmount that difficulty was to put two conical sleeves in that should compress. We have so solved the problem. We now make spindles that are interchangeable, and we do not fit one part to the other. But that is not the case with bolts. You cannot put the compressing thimbles on them, therefore, you have to consider the question, How can you make holes near enough, and how can you turn the bolts near enough alike?"

Fig. 1401 represents, and the following table gives the taper adopted by the Baldwin Locomotive Works.

Bolt threads, American standard, except stay bolts and boiler studs, V-threads, 12 per inch; valves, cocks and plugs, V-threads, 14 per inch, and $\frac{1}{8}$ inch taper per 1 inch.

Standard bolt taper $\frac{1}{16}$ inch per foot.

Length of bolts from head to end of thread equals A.

Diameter of bolt under the head as follows:—

$\frac{3}{64}$	inch larger at B	for 9 inch	and under
$\frac{1}{16}$	,, ,,	over 9 inch	to 12 inch
$\frac{3}{32}$	,, ,,	,, 12 ,,	to 18 ,,
$\frac{1}{8}$	,, ,,	,, 18 ,,	to 24 ,,
$\frac{5}{32}$	,, ,,	,, 24 ,,	to 30 ,,
$\frac{3}{16}$	,, ,,	,, 30 ,,	to 36 ,,

It is obvious that a plug or collar gauge simply determines what is the largest dimension of the work, and that although it will demonstrate that a piece of work is not true or round yet it will not measure the amount of the error. The work may be oval or elliptical, or of any other form, and yet fit the gauge so far as the fit can be determined by the sense of feeling. Or suppose there is a flat place upon the work, then except in so far as the bearing marks made upon the work by moving it within the gauge may indicate, there is no means of knowing whether the work is true or not. Furthermore, in the case of lathe work held between the lathe centres it is necessary to remove the work from the lathe before the collar gauge can be applied, and to

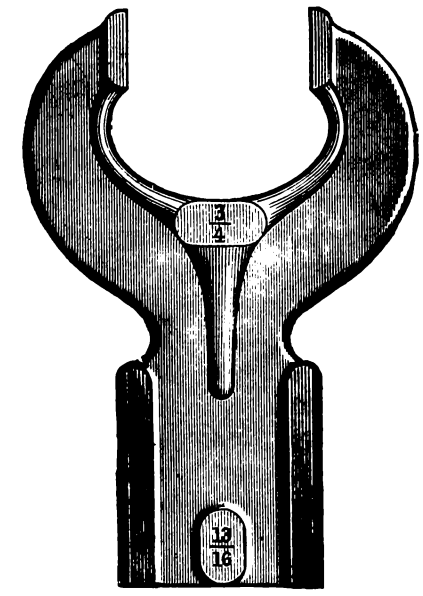

Fig. 1402.

obviate these difficulties we have the caliper gauge shown in Fig. 1402. The caliper end is here shown to be for $\frac{3}{4}$ inch, and the plug end for $\frac{13}{16}$ inch. If the two ends were for the same diameter one gauge only would be used for measuring external and internal work of the same diameter, but in this case the male cannot be tested with the female gauge; whereas if the two ends are for different diameters the end of one gauge may be tested

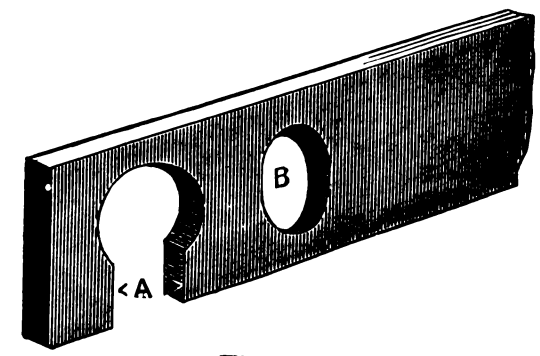

Fig. 1403.

with that of another, and their correctness tested, but the workman will require two gauges to measure an external and internal piece of the same diameter.

For small lathe work of odd size as when it is required to turn work to fit holes reamed by a worn reamer that is below the standard size, a gauge such as in Fig. 1403, is sometimes used, the mouth A serving as a caliper and the hole B as a collar

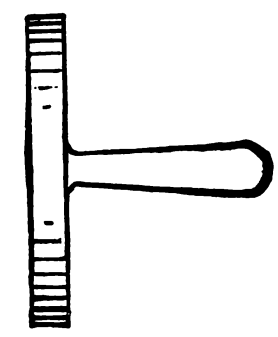

Fig. 1404.

gauge for the same diameter of work. It is obvious that such a gauge may be applied to the work while it is running in the lathe, and that when the size at A wears too large the jaw may be closed to correct it; a plan that is also pursued to rectify the caliper gauge shown in Fig. 1402.

On large work, as, say, of six inches in diameter, a gauge, such as in Fig. 1404, is used, being short so that it may be light enough

to be conveniently handled; or sometimes a piece such as in Fig. 1405 is used as a gauge, the ends being fitted to the curvature of the bore to be tested. Gauges of these two kinds, however, are generally used more in the sense of being templates rather than measuring tools, since they determine whether a bore is of the required size rather than determine what that size is.

For gauging work of very large diameter, as, say, several feet, to minute fractions of an inch, as is necessary, for example, for a shrinkage fit on a locomotive tire, the following method is employed. In Fig. 1406 let A represent a ring, say, 5 feet bore,

Fig. 1405.

and requiring its bore to be gauged to within, say, $\frac{1}{100}$ inch. Then R represents a rod made, say, $\frac{1}{2}$ inch shorter than the required diameter of bore, and W, Fig. 1407, represents a wedge whose upper surface C D is curved, its lower surface being a true plane. The thickness at the end C is made, say, $\frac{51}{100}$ inch, while that at D is $\frac{48}{100}$ inch; or in other words, there is $\frac{3}{100}$ of an inch taper in the length of the wedge. Suppose then that the rod R is placed in the bore of A as in figure, and that the wedge just has contact with the work bore and with the end of the rod when it has entered as far as E in Fig. 1407, and that point E is one-third of

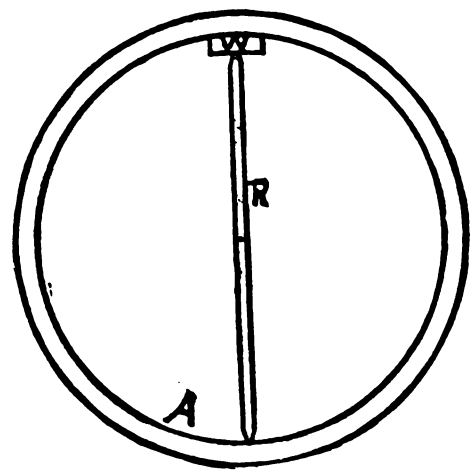

Fig. 1406.

the length of the wedge, then the bore of A will measure the length of the rod R plus $\frac{48}{100}$ of an inch. But if the wedge passed in to line F, the latter being two-thirds the length of the wedge from D, then the bore would be $\frac{50}{100}$ larger than the length of the rod R. It is obvious that with this method the work may be measured very minutely, and the amount of error, if there be any, may be measured.

The rod must be applied to the work in the same position in which its measurement was made, otherwise its deflection may vitiate the measurement. Thus, if the rod measures 4 feet $11\frac{1}{2}$ inches when standing vertical, it must be applied to the work

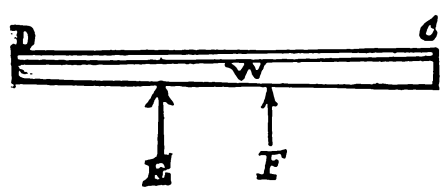

Fig. 1407.

standing vertical; but if it was measured lying horizontal, it must be applied to the work lying horizontal, as there will be a difference in its length when measured in the two positions, which occurs on account of variations in its deflection from its own weight.

For simply measuring a piece of work to fit it to another irrespective of its exact size as expressed in inches and parts of an inch the common calipers are used. Fig. 1408 represents a pair of spring calipers, the bow acting as a spring to keep the two legs apart, and the screw and nut being used to close them against the spring pressure. The slightness of the legs enables these calipers to be forced or to spring over the work, and thus indicate by the amount of pressure it requires to pass them over the work how much it is above size, and therefore how much it requires to be reduced. But, on the other hand, this slightness renders it somewhat difficult to measure with great correctness. A better form of outside calipers is shown in Fig. 1409, in which

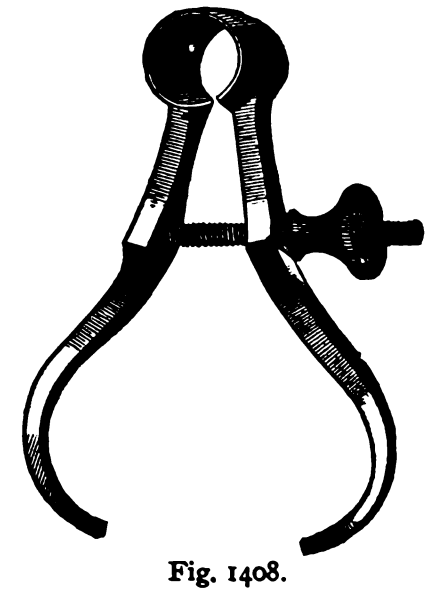

Fig. 1408.

in addition to the stiffness of the pivoted joint a bow spring acts to close the caliper legs, which are operated, to open or close them, by operating the hand screw shown, the nuts in which the screw operates being pivoted to the caliper legs. The advantage of this form is that the calipers may be set very readily, while there is no danger of the set or adjustment of the

Fig. 1409.

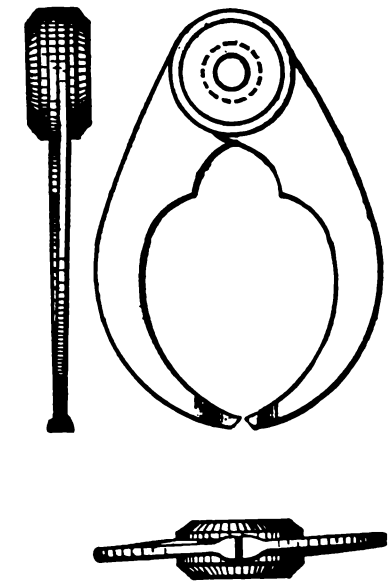

Fig. 1410.

calipers altering from any slight blow or jar received in laying them down upon the bench.

Fig. 1410 gives views of a common pair of outside calipers such as the workman usually makes for himself. When this form is made with a sufficiently large joint, and with the legs broad and

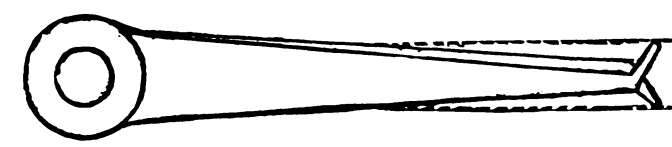

Fig. 1411.

stiff as in the figure, they will serve for very fine and accurate adjustments.

Fig. 1411 represents a pair of inside calipers for measuring the diameters of holes or bores. The points of these calipers should be at an angle as shown in the Fig. 1412, which will enable the points to enter a long distance in a small hole, as is denoted by the dotted lines in the figure. This will also enable

the extreme points to reach the end of a recess, as in Fig. 1413, which the rounded end calipers, such as in this figure, will not do.

Fig. 1414 represents a pair of inside calipers with an adjustment screw having a right-hand screw at A and a left-hand one at B, threaded into two nuts pivoted into the arms, so that by operating the screw the legs are opened or closed, and are locked in position, so that they cannot move from an accidental blow. But as the threads are apt to wear loose, it is preferable to provide a set screw to one of the nuts so as to take up the

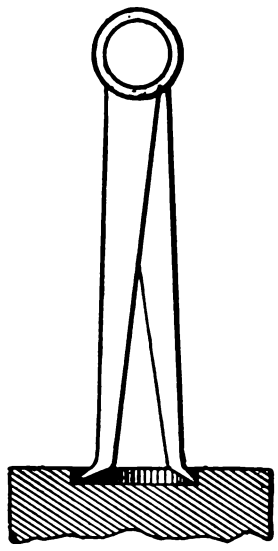

Fig. 1412.

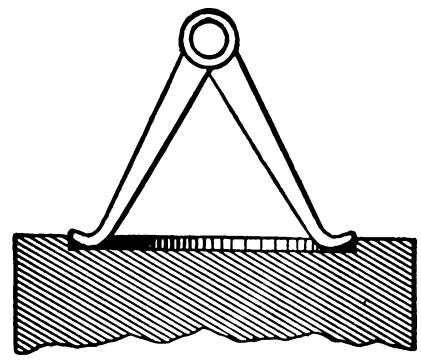

Fig. 1413.

wear and produce sufficient friction to prevent looseness of the legs.

Calipers are sometimes made double, that is to say, the inside and the outside calipers are provided in the one tool, as in Fig. 1415, which represents a pair of combined inside and outside calipers having a set screw at C to secure the legs together after the adjustment is made. The object of this form is to have the measuring points equidistant from the centre of the pivot A in Fig. 1416, so that when the outside legs are set to the diameter of the work as at B, the inside ones will be set to measure a hole or bore of the same diameter as at C.

This, however, is not a desirable form for several reasons, among which are the following:—

In the first place outside calipers are much more used than inside ones, hence the wear on the points are greatest. Again, the pivot is apt to wear, destroying the equality of length of the

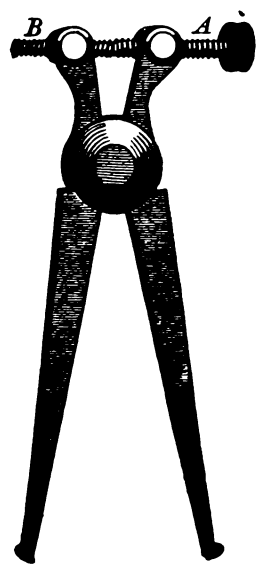

Fig. 1414.

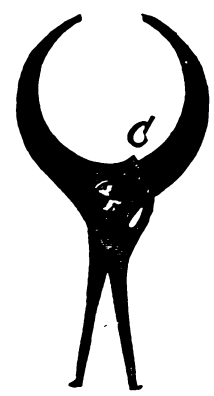

Fig. 1415.

points from the centre of the pivot; and in the third place the shape of the points of calipers as usually made vitiates the correctness of the measurements.

Fig. 1417, for example, represents the ordinary form, the points being rounded; hence, when the legs are closed the point of contact between the inside and outside calipers will be at A, while when they are opened out to their fullest the points of contact will be at B. This may, however, be remedied to a great extent by bevelling off the ends from the outside as shown in Fig. 1416.

The end faces of outside calipers should be curved in their widths, as in Fig. 1418, so that contact shall occur at the middle, and it will then be known just where to apply the points of the inside calipers when testing them with the outside ones.

Inside and outside calipers are capable of adjustment for very fine measurements; indeed, from some tests made by the Pratt

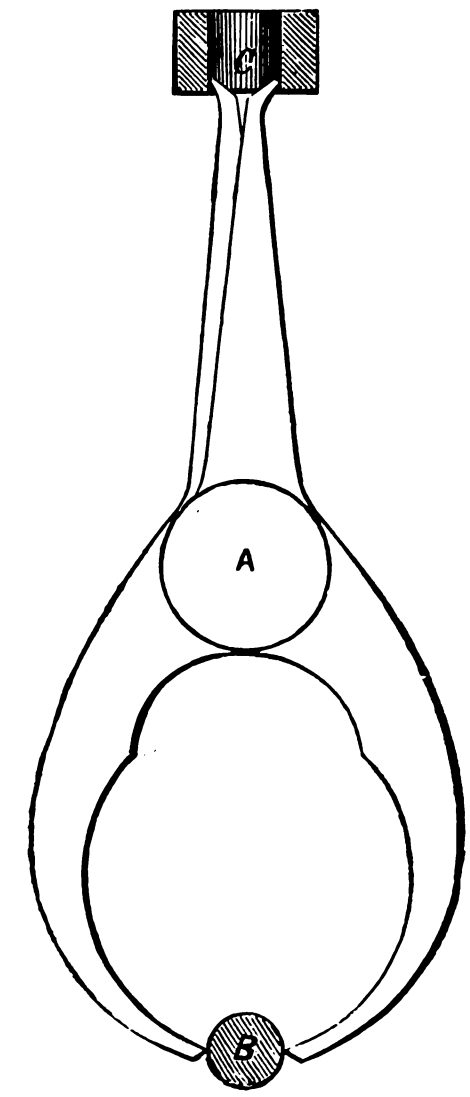

Fig. 1416.

and Whitney Company among their workmen it was found that the average good workman could take a measurement with them to within the twenty-five thousandth part of an inch. But the workman of the general machine shop who has no experience in measuring by thousandths has no idea of the accuracy with which he sets two calipers in his ordinary practice. The great difference that the one-thousandth of an inch makes in the fit of two pieces may be shown as in Fig. 1419, which represents a collar gauge of $\frac{5}{8}$ inch in diameter, and a plug $\frac{1}{1000}$ inch less in diameter, and it was found that with the plug inserted $\frac{1}{8}$ inch in the collar it could be moved from A to B, a distance of about $\frac{5}{16}$ inch, which an ordinary workman would at once recognise as a very loose fit.

If the joints of outside calipers are well made the calipers may upon small work be closed upon the work as in Fig. 1420, and

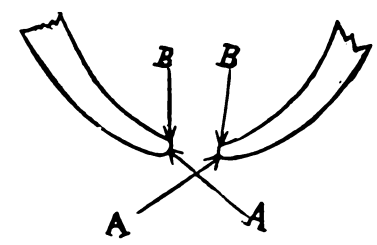

Fig. 1417.

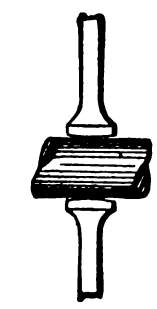

Fig. 1418.

the adjustment may be made without requiring to tap or lightly knock the caliper legs against the work as is usually done to set them. But to test the adjustment very finely the work should be held up to the light, as in Fig 1421, the lower leg of the calipers rested against the little finger so as to steady it and prevent it from moving while the top leg is moved over the work, and at the same time moving it sideways to find when it is held

directly across the work. For testing the inside and outside calipers together they should for small diameters be held as in Fig. 1422, the middle finger serving to steady one inside and one outside leg, while one leg only of either calipers is grasped in the fingers.

For larger dimensions, as six or eight inches, it is better, however, to hold the calipers as in Fig. 1423, the forefinger of the left hand serving to rest one leg of each pair on the contact being thus tested between the legs that are nearest to the operator.

The adjustment of caliper legs should be such that contact between the caliper points and the work is scarcely, if at all, perceptible. If with the closest of observation contact is plainly perceptible, the outside calipers will be set smaller than the work, while in the case of inside calipers, they would be set larger; and for this reason it follows that if a bore is to be measured to have a plug fitted to it, the inside calipers should have barely perceptible contact with the work bore, and the outside calipers should have the same degree of contact, or, if anything, a very minute degree of increased contact. On the other hand, if a bore is to be fitted to a cylindrical rod the outside calipers should be set to have the slightest possible contact with the rod, and the inside ones set to have as nearly as possible the same degree of contact with the outside ones, or, if anything, slightly less contact. For if in any case the calipers have forcible contact with the work the caliper legs will spring open and will therefore be improperly set.

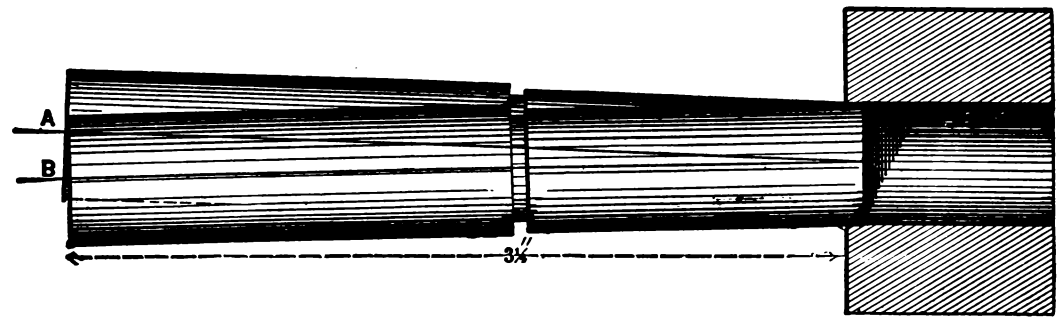

Fig. 1419.

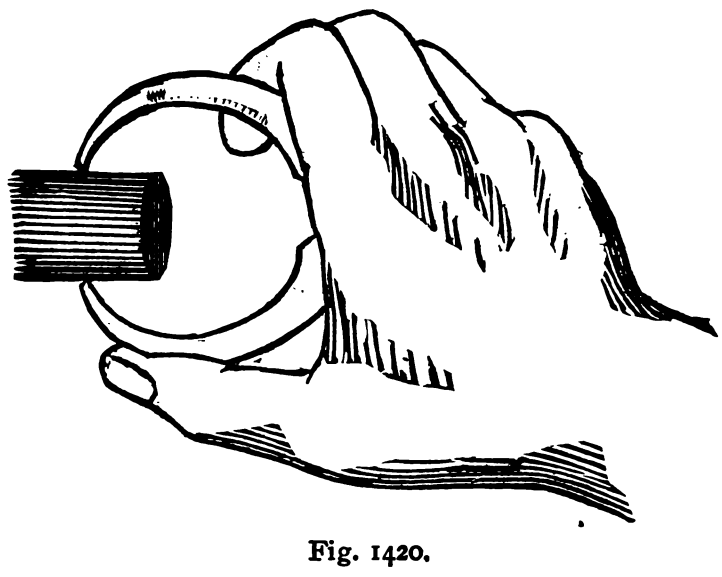

Fig. 1420.

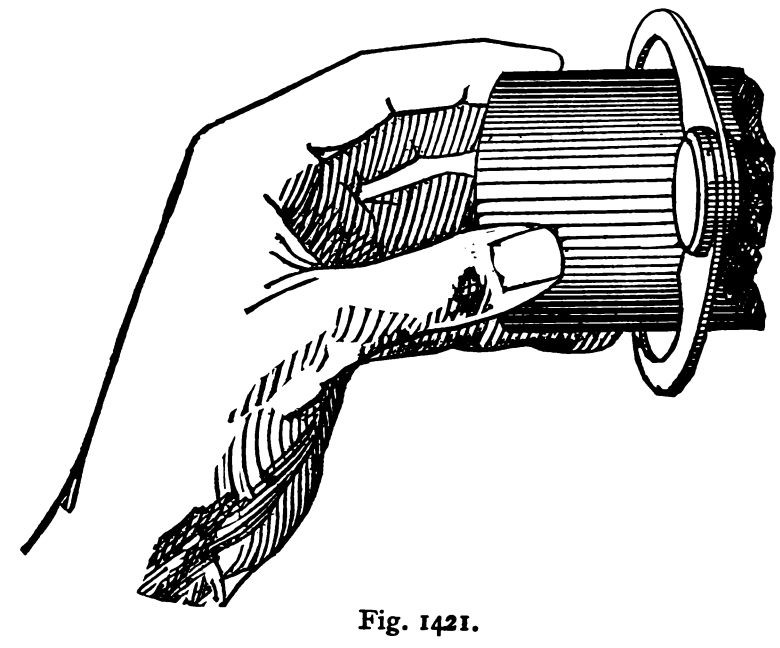

Fig. 1421.

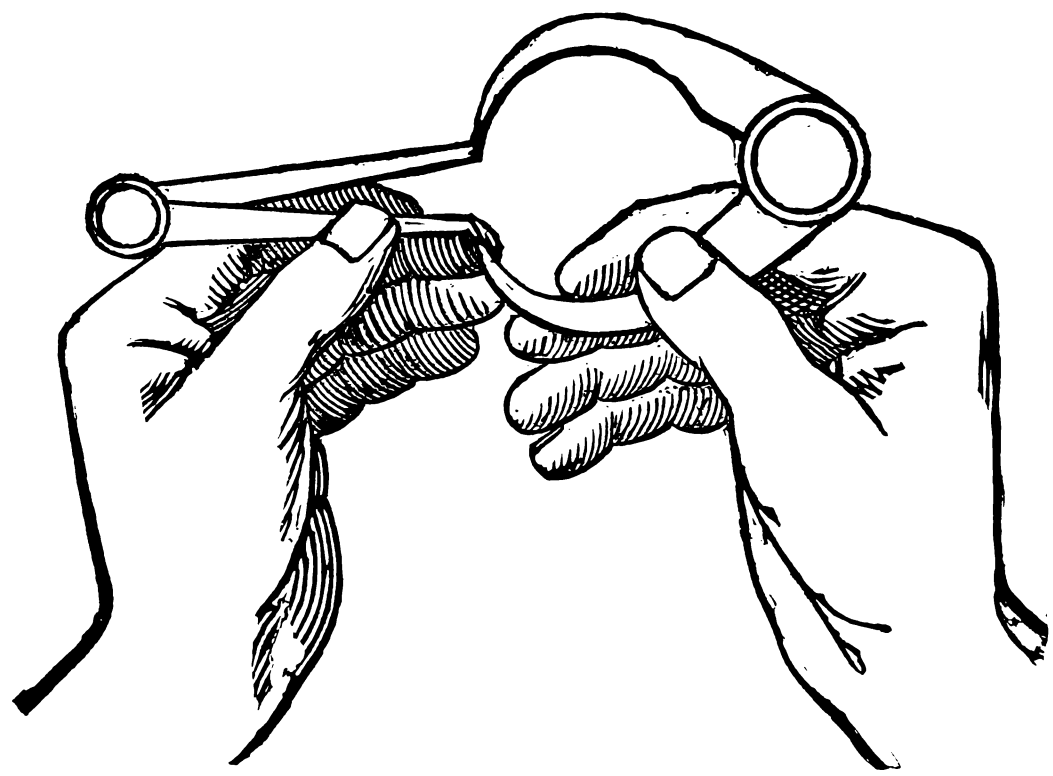

Fig. 1422.

Calipers should be set both to the gauge and to the work in the same relative position. Let it be required, for example, to set a pair of inside calipers to a bore, and a pair of outside calipers to the inside ones, and to then apply the latter to the

work. If the legs of the inside calipers stand vertical to the bore for setting they should stand vertical while the outside calipers are set to them, and if the outside calipers are held horizontally while set to the inside ones they should be applied horizontally to the work, so as to eliminate any error due to the caliper legs deflecting from their own weight.

To adjust calipers so finely that a piece of work may be turned by caliper measurement to just fit a hole, a working or a driving

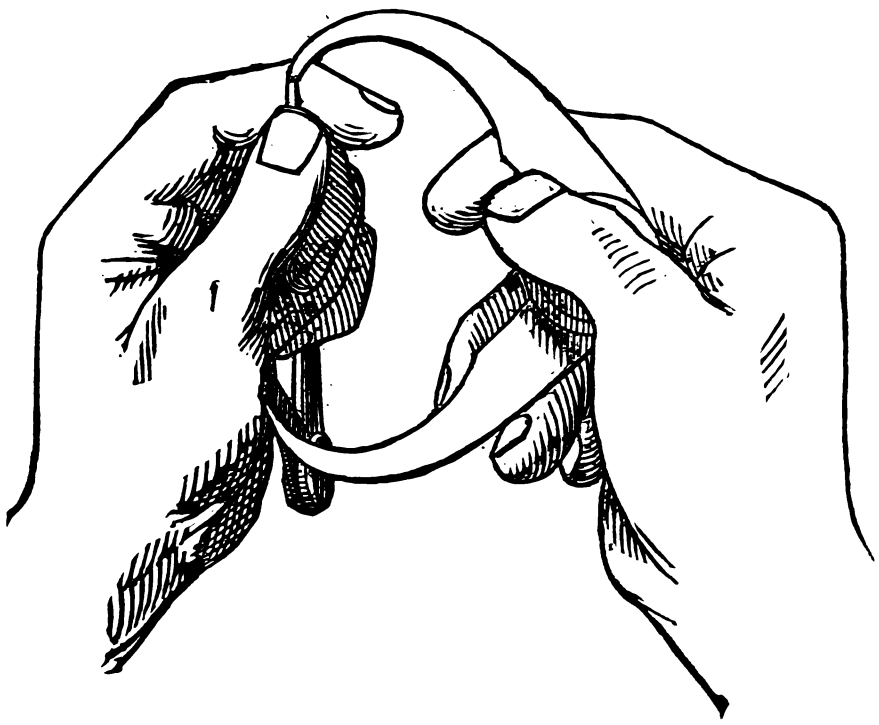

Fig. 1423.

fit without trying the pieces together, is a refinement of measurement requiring considerable experience and skill, because, as will be readily understood from the remarks made when referring to gauge measurements, there are certain minute allowances to be made in the set of the calipers to obtain the desired degree of fit.

In using inside calipers upon flat surfaces it will be found that they can be adjusted finer by trusting to the ear than the eye. Suppose, for example, we are measuring between the jaws of a pillow-block. We hold one point of the calipers stationary, as before, and adjust the other point, so that, by moving it very rapidly, we can just detect a scraping sound, giving evidence of contact between the calipers and the work. If, then, we move the calipers slowly, we shall be unable, with the closest scrutiny, to detect any contact between the two.

Calipers possess one great advantage over more rigid and solid gauges, in that the calipers may be forced over the work when the degree of force necessary to pass them on indicates how much the work is too large, and therefore how much it requires reducing. Thus, suppose a cylindrical piece of work requires to be turned to fit a hole, and the inside calipers are set to the bore of the latter, then the outside calipers may be set to the inside ones and applied to the work, and when the work is reduced to within, say, $\frac{1}{100}$ inch the calipers will spring open if pressed firmly to the work, and disclose to the workman that the work is reduced to nearly the required size. So accustomed do workmen become in estimating from this pressure of contact how nearly the work is reduced to the required diameter, that they are enabled to estimate, by forcing the calipers over the work, the depth of the cut required to be taken off the work, with great exactitude, whereas with solid gauges, or even caliper gauges of solid proportions, this cannot be done, because they will not spring open.

The amount to which a pair of calipers will spring open without altering their set depends upon the shape: thus, with a given joint they will do so to a greater extent in proportion as the legs are slight, whereas with a given strength of leg they will do so more as the diameter of the joint is large and the fit of the joint is a tight one. But if the joint is so weak as to move too easily, or the legs are so weak as to spring too easily, the calipers will be apt in one case to shift when applied to the work, and in the other to spring so easily that it will be difficult to tell by contact when the points just touch the work and yet are not sprung by the degree of contact. For these reasons the points of calipers should be made larger in diameter than they are usually made: thus, for a pair of calipers of the shape shown in Fig. 1410, the joint should be about $1\frac{1}{4}$ inches diameter to every 6 inches of length of leg. The joint should be sufficiently tight that the legs can just be moved when the two legs are taken in one hand and compressed under heavy hand pressure.

For measuring the distance of a slot or keyway from a surface, the form of calipers shown in Fig. 1424 is employed; the straight leg has its surface a true plane, and is held flat against the surface B of the slot or keyway, and the outside or curved leg is set to meet the distance of the work surface measuring the distance C. These are termed keyway calipers.

There are in general machine work four kinds of fit, as follow: The working or sliding fit; the driving fit; the hydraulic press fit; and the shrinkage fit. In the first of these a proper fit is obtained when the surfaces are in full contact, and the enveloped piece will move without undue friction or lost motion when the surfaces are oiled. In the second, third, and fourth, the enveloped piece is made larger than the enveloping piece, so that when the two pieces are put together they will be firmly locked.

It is obvious that in a working or sliding fit the enveloped piece must be smaller than that enveloping it, or one piece could not pass within the other. But the amount of difference, although too small to be of practical importance in pieces of an inch or two in diameter and but few inches in length, is appreciable in large work, as, say, of two or more feet in diameter. A journal, for example, of $\frac{1}{10}$ inch diameter, running in a bearing having a bore of $\frac{1}{1000}$ inch larger diameter, and being two diameters in length, would be instantly recognised as a bad fit; but a journal 6 inches in diameter and two diameters or 12 inches long would be a fair fit in a bearing having a bore of $6\frac{1}{1000}$ inches. In the one case the play would be equal to one one-hundredth of the shaft's diameter, while in the other case the play would equal but one six-thousandth part of the shaft's diameter. In small work the limit of wear is so small, and the length of the pieces so short, that the $\frac{1}{1000}$ of an inch assumes an importance that does not exist in larger work. Thus, in watch work, an error of $\frac{1}{1000}$ inch in diameter may render the piece useless; in sewing machine work it may be the limit to which the tools are allowed to wear; while in a steamship or locomotive engine it may be of no practical importance whatever.

A journal $\frac{1}{10}$ inch in diameter would require to run, under

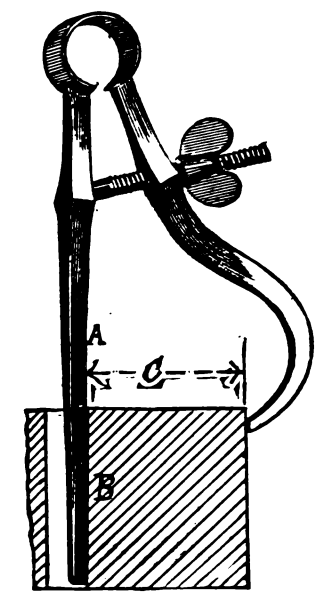

Fig. 1424.

ordinary conditions, several years to become $\frac{1}{1000}$ inch loose in its bearing. Some of this looseness, and probably nearly one half of it, will occur from wear of the bearing bore; hence, if a new shaft of the original standard diameter be supplied the looseness will be reduced by one-half. But a 6-inch journal and bearing would probably wear nearly $\frac{1}{1000}$ inch loose in wearing down to a bearing which may take but a week or two, and for

these reasons among others, standard gauges and measuring tools are less applicable to large than to small work.

The great majority of fits made under the standard gauge system consist of cylindrical pieces fitting into holes or bores. Suppose then that we have a plug and a collar gauge each of an inch diameter, and a reamer to fit the collar gauge, and we commence to ream holes and to turn plugs to fit the collar gauge, then as our work proceeds we shall find that as the reamer wears, the holes it makes will get smaller, and that as the collar gauge wears, its bore gets larger, and it is obvious that the work will not go together. The wear of the gauge obviously proceeds slowly, but the wear of the reamer begins from the very first hole that it reams, although it may perform considerable duty before its wear sensibly affects the size of the hole. Theoretically, however, its size decreases from the moment it commences to perform cutting duty until it has worn out, and the point at which the wearing-out process may have proceeded to its greatest permissible limit is determined by its reduction of size rather than by the loss of its sharpness or cutting capacity. Obviously then either the reamer must be so made that its size may be constantly adjusted to take up the wear, as in the adjustable reamer, or else if solid reamers are used there must be a certain limit fixed upon as the utmost permissible amount of wear, and the reamer must be made above the standard size to an amount equal to the amount of this limit, so that when the reamer has worn down it will still bore a hole large enough to admit the plug gauge. To maintain the standard there should be in this case two sets of gauges, one representing the correct standard and the other the size to which the reamer is to be made when new or restored to its proper size.

The limit allowed for reamer wear varies in practice from $\frac{1}{1000}$ to $\frac{1}{10000}$ of an inch, according to the requirements of the work. As regards the wear of the standard gauges used by the workmen they are obviously subject to appreciable wear, and must be returned at intervals to the tool room to be corrected from gauges used for no other purpose.

To test if a hole is within the determined limit of size a limit gauge may be used. Suppose, for example, that the limit is $\frac{1}{1000}$ of an inch, then a plug gauge may be made that is $\frac{1}{1000}$ of an inch taper, and if the large end of this plug will enter the hole, the latter is too large, while if the small end will not enter, the hole is too small.

When only a single set of plug and collar gauges are at hand the plug or the collar gauge may be kept to maintain the standard, the other being used to work to, both for inside and outside work. Suppose, for example, that a plug and collar gauge are used for a certain piece of work and that both are new, then the reamer may be made from either of them, because their sizes agree, but after they have become worn either one or the other must be accepted as the standard of size to make the reamer to. If it be the collar gauge, then the plug gauge is virtually discarded as a standard, except in that if the plug gauge be not used at all it may be kept as a standard of the size to which the collar gauge must be restored when it has worn sufficiently to render restoration to size necessary. If this system be adopted the size of the reamer will be constantly varying to suit the wear of the collar gauge, and the difficulty is encountered that the standard lathe arbors or mandrels will not fit the holes produced, and it follows that if standard mandrels are to be used the reamers must when worn be restored to a standard size irrespective of the wear of the gauges, and that the standard mandrels must be made to have as much taper in their lengths as the limit of wear that is allowed to the reamers. Suppose, for example, that it is determined to permit the reamer to wear the $\frac{1}{2000}$ of an inch before restoring it to size, then in an inch mandrel the smallest end may be made an inch in diameter and the largest $1\frac{1}{2000}$ inch in diameter, so that however much the reamer may be worn within the limit allowed for wear the hole it produces will fit at some part in the length of the standard mandrel. But as the reamer wears smaller its size must be made as much above its designated standard size as the limit allowed for wear; hence, when new or when restored to size, the reamer would measure $1\frac{1}{2000}$ inches, and the hole it produced would fit the large end of the mandrel. But as the reamer wore, the hole would be reamed smaller and would not pass so far along the mandrel, until finally the limit of reamer wear being reached the work would fit the small end of the mandrel. The small end of the mandrel is thus the standard of its size, and the wear of the collar gauge is in the same direction as that of the reamer. Thus, so long as the collar gauge has not worn more than the $\frac{1}{2000}$ of an inch it will, if placed upon the mandrel, fit it at some part of its length.

Now suppose that the plug gauge be accepted as the standard to which the reamer is to be made, and that to allow for reamer wear the reamer is made, say, $\frac{1}{2000}$ inch larger than the plug gauge, the work being made to the collar gauge. Then with a new reamer and new or unworn gauges the hole will be reamed above the standard size to the $\frac{1}{2000}$ inch allowed for reamer wear. As the reamer wears, the hole it produces will become smaller, and as the collar gauge wears, the work turned to it will be larger, and the effect will be that, to whatever extent the collar gauge wears, it will reduce the permissible amount of reamer wear, so that when the collar gauge had worn the $\frac{1}{2000}$ inch the work would not go together unless the reamer was entirely new or unworn.

In a driving fit one piece is driven within the other by means of hammer blows, and it follows that one piece must be of larger diameter than the other, the amount of the difference depending largely upon the diameter and length of the work.

It is obvious, however, that the difference may be so great that with sufficiently forcible blows the enveloping piece may be burst open. When a number of pieces are to be made a driving fit, the two pieces may be made to fit correctly by trial and correction, and from these pieces gauges may be made so that subsequent pieces may be made correct by these gauges, thus avoiding the necessity to try them together.

In fitting the first two pieces by fit and trial, or rather by trial and correction, the workman is guided as to the correctness of the fit by the sound of the hammer blows, the rebound of the hammer, and the distance the piece moves at each blow. Thus the less the movement the more solid the blow sounds, and the greater the rebound of the hammer the tighter the fit, and from these elements the experienced workman is enabled to know how tightly the pieces may be driven together without danger of bursting the outer one.

What the actual difference in diameter between two pieces may require to be to make a driving fit is governed, as already said, to a great extent by the dimensions of the pieces, and also by the nature of the material and the amount of area in contact. Suppose, for example, that the plug is 6 inches long, and the amount of pressure required to force it within the collar will increase with the distance to which it is enveloped by the collar. Or suppose one plug to be 3 inches and another to be 6 inches in circumference, and each to have entered its collar to the depth of an inch, while the two inside or enveloped pieces are larger than the outside pieces by the same amount, the outside pieces being of equal strength in proportion to their plugs, so that all other elements are equal, and then it is self-evident that the largest plug will require twice as much power as the small one will to force it in another inch into the collar, because the area of contact is twice as great. It is usual, therefore, under definite conditions to find by experiment what allowance to make to obtain a driving or a forcing fit. Thus, Mr. Coleman Sellers, at a meeting of the Car Builders Association, referring to the proper amount of difference to be allowed between the diameters of car axles and wheel bores in order to obtain a proper forcing or hydraulic fit, said, "Several years ago some experiments were made to determine the difference which should be made between the size of the hole and that of the axle. The conclusion reached was that if the axle of standard size was turned 0·007 inch larger than the wheel was bored it would require a pressure of about 30 tons to press the axle into the wheel." The wheel seat on the axle here referred to was $4\frac{7}{8}$ inches in diameter and 7 inches long. It is to be remarked, however, that the wheel bore being of cast iron and the axle of wrought iron the friction between the surfaces was not the same as it would be were the

two composed of the same metal. This brings us to a consideration of what difference in the forcing fit there will be in the case of different metals, the allowance for forcing being the same and the work being of the same dimensions.

Suppose, for example, that a wrought-iron plug of an inch in diameter is so fitted to a bore that when inserted therein to a distance of, say, 2 inches, it requires a pressure of 3 lbs. to cause it to enter farther, then how much pressure would it take if the bore was of cast iron, of yellow brass, or of steel, instead of wrought iron. This brings us to another consideration, inasmuch as the elasticity and the strength of the enveloping piece has great influence in determining how much to allow for a driving, forcing, or a shrinkage fit.

Obviously the allowance can be more if the enveloping piece be of wrought iron, copper, or brass, than for cast iron or steel, because of the greater elasticity of the former. Leaving the elasticity out of the question, it would appear a natural assumption that the pieces, being of the same dimensions, the amount of force necessary to force one piece within the other would increase in proportion as the equivalents of friction of the different metals increased.

This has an important bearing in practice, because the fit of pieces not made to standard gauge diameter is governed to a great extent by the pressure or power required to move the pieces. Thus, let a steel crosshead pin be required to be as tight a fit into the crosshead as is compatible with its extraction by hand, and its diameter in proportion to that of the bore into which it fits will not be the same if that bore be of wrought iron, as it would be were the bore of steel, because the coefficient of friction for cast steel on cast iron is not the same as that for steel on wrought iron. In other words, the lower the coefficient of friction on the two surfaces the less the power required to force one into the other, the gauge diameters being equal. In this connection it may be remarked that the amount of area in contact is of primary importance, because in ordinary practice the surfaces of work left as finished by the steel cutting tools are not sufficiently true and smooth to give a bearing over the full area of the surfaces.

This occurs for the following reasons. First, work to be bored must be held (by bolts, plates, chuck-jaws, or similar appliances) with sufficient force to withstand the pressure of the cut taken by the cutting tool, and this pressure exerts more or less influence to spring or deflect the work from its normal shape, so that a hole bored true while clamped will not be so true when released from the pressure of the holding clamps.

To obviate this as far as possible, expert workmen screw up the holding devices as tight as may be necessary for the heavy roughing cuts, and then slack them off before taking the finishing cuts.

Secondly, under ordinary conditions of workshop practice, the steel cutting tools do not leave a surface that is a true plane in the direction of the length of the work, but leave a spiral projection of more or less prominence and of greater or less height, according to the width of that part of the cutting edge which lies parallel to the line of motion of the tool feed, taken in proportion to the rate of feed per revolution of the work.

Let the distance, Fig. 1424A, A to B lie in the plane of motion of the tool feed, and measure, say, $\frac{1}{4}$ inch, the tool moving, say, $\frac{5}{16}$ inch along the cut per lathe revolution. Suppose the edge from B to D to lie at a minute angle to the line of tool traverse, and the depth of the cut to be such that the part from B to C performs a slight cutting or scraping duty, then the part from B to C will leave a slight ridge on the work plainly discernible to the naked eye in what are termed the tool marks.

The obvious means of correcting this is to have the part A B of greater width than the tool will feed along the cut, during one revolution of the work (or the cutter, as the case may be); but there are practicable obstacles to this, especially when applied to wrought iron, steel, or brass, because the broader the cutting edge of a tool the more liable it is to spring, as well as to jar or chatter, leaving a surface showing minute depressions lying parallel to the line of tool feed.

If the cutting tool be made parallel and cylindrical on its edges, and clearance be given on the front end of its diameter only, so as to cut along a certain distance only of its cylindrical edge, the rest being a close fit to the bore of the work, the part having no cutting edge, that is, the part without clearance, will be apt to cause friction by rubbing the bore of the work as the tool edge wears, and the friction will cause heat, which will increase as the cut proceeds, causing the hole to expand as the cut proceeds, and to be taper when cooled to an equal degree all over. This may be partly obviated by giving the tool a slow rate of cutting speed, and a quick rate of feed, which will greatly reduce the friction and consequently the heating of the tool and the work. On cast iron it is possible to have a much broader cutting edge to the tool, without inducing the chattering referred to, than is the case with wrought iron, steel, or brass, especially when the finishing cut is a very light one. If the finishing cut be too deep, the surface of the work, if of cast iron, will be pitted with numerous minute holes, which occur because the metal breaks out from the strain placed on it (and due to the cut) just before it meets the cutting edge of the tool. Especially is this the case if the tool be dull or be ground at an insufficiently acute angle.

When the work shows the tool marks very plainly, or if of cast iron shows the pitting referred to (instead of having a smooth and somewhat glossy appearance), there will be less of its surface in contact with the surface to which it fits, and the fit will soon become destroyed, because the wearing surface or the gripping surface, as the case may be, will the sooner become impaired, causing looseness of the fit. In the one case the abrasion which should be distributed over the whole area of the fitting parts is at first confined to the projections having contact, which, therefore, soon wear away. In the other case the projecting area in contact compresses, causing looseness of the fit.

Hydraulic press or forcing fits.—For securing pieces together by forcing one within the other by means of an hydraulic press, the plug piece is made a certain amount larger than the bore it is to enter, this amount being termed the allowance for forcing. What this allowance should be under any given conditions for a given metal, will depend upon the truth and smoothness of the surfaces, and on this account no universal rule obtains in general practice. From some experiments made by William Sellers & Co., it was determined that if a wheel seat (on an axle) measuring $4\frac{7}{8}$ inches in diameter and 7 inches long was turned $\frac{7}{1000}$ of an inch larger than the wheel bore, it would require a pressure of about thirty tons to force the wheel home on the axle.

At the Susquehanna shops of the Erie railroad the measurements are determined by judgment, the operatives using ordinary calipers. If an axle $3\frac{1}{2}$ diameter and 6 inches long requires less than 25 tons it is rejected, and if more than 35 tons it is corrected by reducing the axle.

In order to insure a proper fit of pieces to be a driven or forced fit it is sometimes the practice to make them taper, and there is a difference of opinion among practical mechanics as to whether taper or parallel fits are the best. Upon this point it may be remarked that it is much easier to measure the parts when they are parallel than when they are taper, and it is easier to make them parallel than taper.

On the elevated railroads in New York city, the wheel bores being $4\frac{1}{8}$ inches in diameter and 5 inches long, the measurements are taken by ordinary calipers, the workmen judging how much to allow, and the rule is to reject wheels requiring less than about 26 tons, or more than about 35 tons, to force them on. These wheels form excellent examples, because of the excessive duty to which they are subjected by reason of the frequency of their stoppage under the pressure of the vacuum brake. The practice with these wheels is to bore them parallel, finishing with a feed of $\frac{1}{4}$ inch per lathe revolution, and to turn the axle seats taper just discernible by calipers.

This may, at first sight, seem strange, but examination makes it reasonable and plain. Let a wheel having a parallel bore be forced upon a parallel axle, and then forced off again, and the bore of the wheel will be found taper to an appreciable amount, but increasing in proportion as the surface of the hole varied from a dead smoothness; in other words, varying with the depth of the tool marks in the bore and the smoothness of the cut.

Let the length of the wheel bore be 7 inches long, and the

amount allowed for forcing be ·004 inch, and one end of the wheel bore will have been forced (by the time it is home on the axle) over the length of 7 inches of the axle-seat, whose diameter was ·004 larger than the bore: a condensation, abrasion, or smoothing of the metal must have ensued.

Now the other end of the same bore, when it takes its bearing on the shaft, is just iron, and iron without having suffered any condensation. If the tool marks be deep, those on one end will be smoothed down while those at the other remain practically intact. Clearly then, for a parallel hole, a shaft having as much taper as the wheel bore will get in being forced over the shaft best meets the requirements; or, for a parallel shaft or seat, and a taper hole (the taper being proportioned as before), the small end of the taper hole should be first entered on the shaft, and then when home both the axle and the wheel-bore will be parallel.

It may be remarked that the wheel seat on the axle will also be affected, which is quite true, but the axle is usually of the hardest metal and has the smoothest surface, hence it suffers but little; not an amount of any practical importance.

In an experiment upon this point made in the presence of the author by Mr. Howard Fry and the master mechanic of the Renovo shops of the Philadelphia and Erie railroad, an axle seat finished by a Whitney "doctor," and parallel in diameter, was forced into a wheel having a parallel bore, and removed

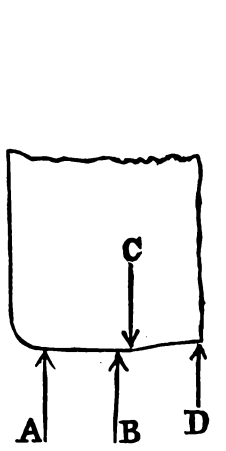

Fig. 1424A.

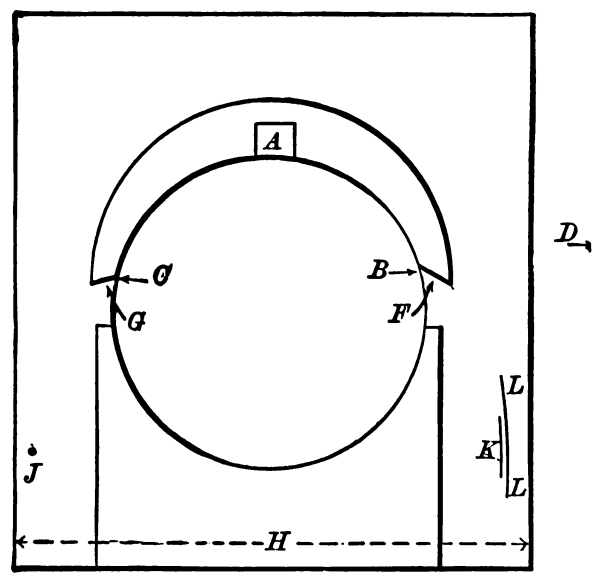

Fig. 1425.

immediately. On again measuring the axle, the wheel-seat was found to be $\frac{1}{1000}$ taper in its length.

The wheel-bore was found to be but slightly affected in its diameter, which is explained because it being very smooth, while the turning marks in the axle were plainly visible, the abrasion fell mainly upon the latter.

When the enveloping piece or bore is not solid or continuous, but is open on one side, the degree of the fit may be judged from the amount that it opens under the pressure of the plug piece.

Thus the axle brasses of American locomotives are often made circular at the back, as shown in Fig. 1425, and are forced in endways by hydraulic pressure. The degree of tightness of the brass within the box may, of course, be determined by the amount of pressure it requires to force it in, but another method is to mark a centre punch dot as at J, and before the brass is put in mark from this dot as a centre an arc of a circle as L L. When the brass is home in the box a second arc K is marked, the distance between L and K showing how much the brass has sprung the box open widening at H. In an axle box whose bore is about 4 inches to 5 inches in diameter, and 6 inches long, $\frac{1}{32}$ inch is the allowance usually made.

Shrinkage fits are employed when a hole or bore requires to be very firmly and permanently fastened to a cylindrical piece as a shaft. The bore is turned of smaller diameter than its shaft, and the amount of difference is termed the allowance for shrinkage. The enveloping piece is heated so as to expand its bore; the shaft is then inserted and the cooling of the bore causes it to close or contract upon the shaft with an amount of force varying of course with the amount allowed for contraction. If this allowance is excessive, sufficient strain will be generated to burst the enveloping piece asunder, while if the allowance for shrinking is insufficient the enveloping piece may become loose.

The amount of allowance for shrinkage varies with the diameter thickness, and kind of the material; but more may be allowed for wrought iron, brass, and copper, than for cast iron or steel.

Again, the smoothness and truth of the surfaces is an important element, because the measurement of a bore will naturally be taken at the tops of the tool marks, and these will compress under the shrinkage strain, hence less allowance for contraction is required in proportion as the bore is smoother.

In ordinary workshop practice, therefore, no special rule for the amount of allowance for shrinkage obtains, the amount for a desultory piece of work generally being left to the judgment of the workman, while in cases where such work is often performed on particular pieces, the amount of allowance is governed by experience, increasing it if the pieces are found in time to become loose, and decreasing it if it is found possible to get the parts together without making the enveloping piece too hot, or if it is found to be liable to split from the strain.

The strength of the enveloping piece is again an element to be considered in determining the amount to be allowed for shrinkage. It is obvious, for example, that a ring of 8 inches thick, and having a bore of, say, 6 inches diameter, would be less liable to crack from the strain due to an allowance of $\frac{1}{50}$ inch for contraction, than would a ring of equal bore and one inch thick having the same allowance. The strength or resistance to compression of the piece enveloped in proportion to that enveloping it, is yet another consideration.

The tires for railway wheels are usually contracted on, and Herr Krupp states the allowance for contraction to be for steel tires $\frac{1}{100}$ inch for every foot of diameter; in American practice, however, a greater amount is often employed. Thus upon the Erie railroad a 5 foot tire is given $\frac{1}{16}$ inch contraction. The allowance for wrought iron or brass should be slightly more than it is for steel or cast iron, on account of the greater elasticity of those metals.

Examples of the practice at the Renovo shops of the Pennsylvania road are as follows:

Class E, diameter of wheel centre, 44 inches; bore of steel tire, $43\frac{15}{16}$ inches.

Class D, diameter of wheel, 50 inches; bore of tire, $49\frac{9}{16}$ inches.

It is found that the shrinkage of the tire springs or distorts the wheel centre, hence the tires are always shrunk on before the crank-pin holes are bored.

Much of the work formerly shrunk on is now forced on by an hydraulic press. But in many cases the work cannot be taken to an hydraulic press, and shrinkage becomes the best means. Thus, a new crank pin may be required to be shrunk in while the crank is on the engine shaft, the method of procedure being as follows: In heating the crank, it is necessary to heat it as equally as possible all round the bore, and not to heat it above a *very dark* red. In heating it some dirt will necessarily get into the hole, and this is best cleaned out with a piece of emery paper, wrapped round a half-round file, carefully blowing out the hole after using the emery paper. Waste or rag, whether oiled or not, is not proper to clean the hole with, as the fibres may burn and lodge in the hole; indeed, nothing is so good as emery paper.

It is desirable to heat the crank as little as will serve the purpose, and it is usual to heat it enough to allow the pin to push home by hand. It is better, however, to overheat the crank than to underheat it, providing that the heat in no case exceeds a barely perceptible red heat. If, however, the crank once grips the pin before it is home, in a few seconds the pin will be held so fast that no sledge hammer will move it. It is well, therefore, to have a man stationed on each side of the crank, each with a sledge hammer, and to push the crank pin in with a slam, giving the man in front orders to strike it as quickly as possible at a given signal; but if the pin does not move home so rapidly at each blow as to make it appear certain that it will go home, the man at the rear, who should have a ten-pound sledge, should be signalled to drive out the crank pin as quickly as he possibly can, for every second is of consequence. All this should be done so

quickly that the pin has not had time to get heated to say 100° at the part within the crank.

So soon as the pin is home, a large piece of wetted cotton waste should be wrapped round its journal, and a stream of water kept running on it, to keep the crank pin cold. At the other end water should be poured on the pin end in a fine stream, but in neither case should the water run on the crank more than can be avoided. Of course, if the crank is off the shaft, the pin may be turned downward, and let project into water.

The reasons for cooling the pin and not the crank are as follows: If the crank be of cast iron, sudden cooling it would be liable to cause it to split or crack. If the crank pin is allowed to cool of itself, the pin will get as hot as the crank itself, and in so doing will expend, placing a strain on the crank that will to some extent stretch it. Indeed, when the pin has become equally hot with the crank it is as tight a fit as it will ever be, because after that point both pieces will cool together, and shrink or contract together, and hence the fit will be a looser or less tight one to the amount that the pin expanded in heating up to an equal temperature with the crank.

The correct process of shrinking is to keep the plug piece as cold as possible, while the outside is cooled as rapidly as can be without danger of cracking or splitting.

The ends of crank pins are often riveted after being shrunk in, in which case it is best to recess the end, which makes the riveting easier, and causes the water poured upon its face to be thrown outward, thus keeping it from running down the crank face and causing the crank to crack or split.

It sometimes becomes necessary and difficult to take out a piece that has been shrunk in, and in this event, as also in the case of a piece that has become locked before getting fully home in the shrinking process, there is no alternative but to reheat the enveloping piece while keeping the enveloped piece as cold as can be by an application of water.

The whole aim in this case is to heat the enveloping piece as quickly as possible, so that there shall be but little time for its heat to be transmitted to the piece enveloped. To accomplish this end melted metal, as cast iron, is probably the most efficient agent; indeed it has been found to answer when all other means failed.

The fine measurements necessary for shrinkage purposes render it necessary, where pieces of the same form and kind are shrunk on, to provide the workmen with standard gauges with which the work may be correctly gauged. These often consist of simple rods or pieces of iron wire of the required length. Figs. 1426 and 1427, however, represent an adjustable shrinkage gauge designed by H. S. Brown, of Hartford, Connecticut. Fig. 1427 is a sectional, and Fig. 1426 a plan side view of the gauge. A is a frame, containing at its lower end a fixed measuring piece B, and provided at its upper end with a threaded and taper split hub to receive externally the taper-threaded screw cap C, and threaded internally to receive a tube E, which is plugged at the bottom by the fixed plug F. The adjustable measuring leg G is threaded with the tube E, so as to be adjustable for various diameters of boxes, but it is locked when adjusted by the jamb-nut H. The operation is as follows: The cap-nut C and jamb-nut H are loosened and screwed back, allowing stem G and tube E to be adjusted to the exact size of the shaft for which a shrinkage fit is to be bored, as, say, in an engine crank. In setting the gauge to the diameter of the shaft, the cap end C and jamb-nut H are screwed home, so as to obtain a correct measurement while all parts are locked secure. The cap-nut C draws the split hub upon the tube E, and the jamb-nut H locks up G to E, so that the shaft measurement is taken with all lost motion, play and spring of the mechanism taken into account, so that they shall not vitiate the measurement. This being done, C is loosened so that E can be rotated, and raised up (by rotating) to admit the shrinkage gauge-piece J, whose thickness equals the amount to be allowed for the size of borer to be shrunk on the shaft. J being inserted, E is rotated back so as to bind J between the end of E and the foot piece B, when C is screwed down, clamping E again. Thus the measuring diameter of the gauge is increased to an amount due to the thickness of the gauge-piece J. At the right of Fig. 1426 an edge and side elevation of J is shown, the $\frac{12}{1000}$ indicating its thickness, which is the amount allowed for shrinkage, and the 6-inch indicating that this gauge-piece is to be used for bores of 6 inches in diameter. The dotted circle K K L L represents a bore to which the gauge is shown applied.

The system of shrinking employed at the Royal Gun Factory at Woolwich, England, is thus described by Colonel Maitland, superintendent of that factory:—

"The inside diameter of the outer tube, when cold, must be rather smaller than the outside diameter of the inner tube: this difference in the diameter is called the 'shrinkage.' While the outer coil is cooling and contracting it compresses the inner one: the amount by which the diameter of the inner coil is decreased is termed the 'compression.' Again, the outer coil itself is stretched on account of the resistance of the inner one, and its diameter is increased; this increase in the diameter of an outer coil is called 'extension.' The shrinkage is equal to compression plus the extension, and the amount must be regulated by the known extension and compression under certain stresses and given circumstances. The compression varies inversely as the density and

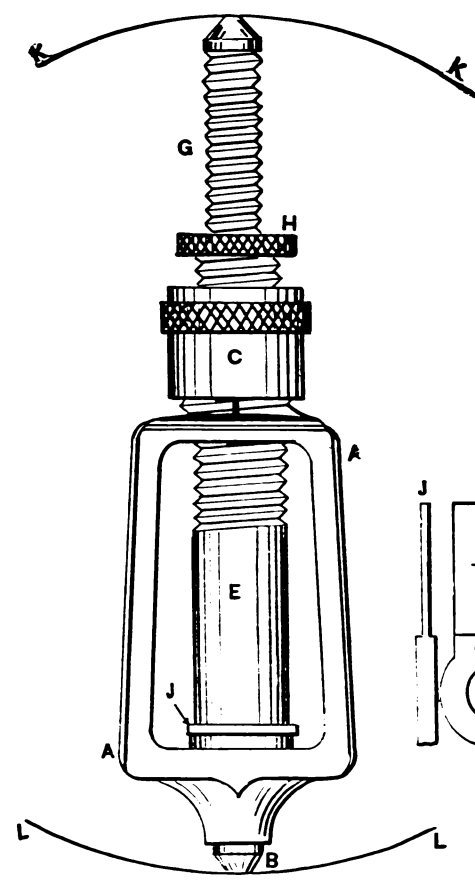

Fig. 1426.

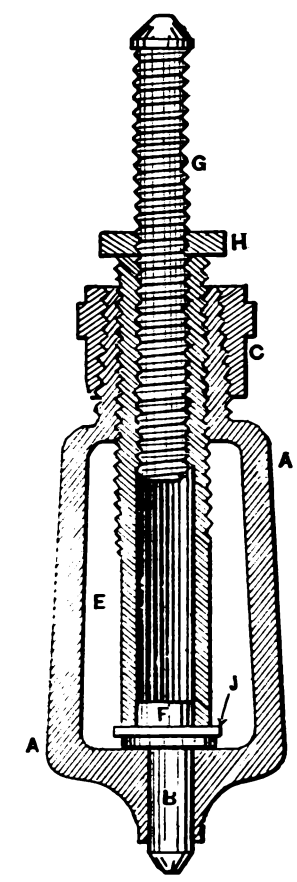

Fig. 1427.

rigidity of the interior mass; the first layer of coils will therefore undergo more compression than the second, and the second more than the third, and so on.

"Shrinking is employed not only as an easy and efficient mode of binding the successive coils of a built-up gun firmly together, but also for regulating as far as possible the tension of the several layers, so that each and all may contribute fairly to the strength of the gun.

"The operation of shrinking is very simple; the outer coil is expanded by heat until it is sufficiently large to fit easily over the inner coil or tube (if a large mass, such as the jacket of a Fraser gun, by means of a wood fire, for which the tube itself forms a flue; if a small mass, such as a coil, in a reverberatory furnace at a low temperature, or by means of gas). It is then raised up by a travelling crane overhead and dropped over the part on to which it is to be shrunk, which is placed vertically in a pit ready to receive it.

"The heat required in shrinking is not very great. Wrought iron, on being heated from 62° Fahr. (the ordinary temperature) to 212°, expands linearly about 1-1000th part of its length; that is to say, if a ring of iron 1000 inches in circumference were put into a vat of boiling water, it would increase to 1001 inches, and according to Dulong and Petit the coefficient of expansion, which

is constant up to 212°, increases more and more from that point upward, so that if the iron ring were raised 150° higher still (*i.e.* to 362°) its circumference would be more than 1002 inches. No coil is ever shrunk on with so great a shrinkage as the 2-1000th part of its circumference or diameter, for it would be strained beyond its elastic limit. Allowing, therefore, a good working margin, it is only necessary to raise a coil to about 500° Fahr.,* though in point of fact coils are often raised to a higher degree of temperature than this in some parts, on account of the mode of heating employed. Were a coil plunged in molten lead or boiling oil (600° Fahr.) it would be uniformly and sufficiently expanded for all the practical purposes of shrinking, but as shrinkings do not take place in large numbers or at regular times, the improvised fire or ordinary furnace is the more economical mode, and answers the purpose very well.

"Heating a coil beyond the required amount is of no consequence, provided it is not raised to such a degree of temperature that scales would form; and in all cases the interior must be swept clean of ashes, &c., when it is withdrawn from the fire. With respect to the modes of cooling during the process of shrinking, care must be taken to prevent a long coil or tube cooling simultaneously at both ends, for this would cause the middle portion to be drawn out to an undue state of longitudinal tension. In some cases, therefore, water is projected on one side of a coil so as to cool it first. In the case of a long tube of different thickness, like the tube of a R. M. L. gun, water is not only used at the thick end, but a ring of gas or a heated iron cylinder is applied at the thin or muzzle end, and when the thick end cools the gas or cylinder is withdrawn from the muzzle, and the ring of water raised upward slowly to cool the remainder of the tube gradually.

"As a rule, the water is supplied whenever there is a shoulder, so that that portion may be cooled first and a close joint secured there; and water is invariably allowed to circulate through the interior of the mass to prevent its expanding and obstructing or delaying the operation; for example, when a tube is to be shrunk on a steel barrel, the latter is placed upright on its breech end, and when the tube is dropped down on it, a continual flow of cold water is kept up in the barrel by means of a pipe and syphon at the muzzle. The same effect is produced by a water jet underneath, when it is necessary to place the steel tube muzzle downward for the reception of a breech coil. As to the absolute amount of shrinkage given when building up our guns, let us take the 12½-inch muzzle-loading gun of 38 tons as an example.

SHRINKAGES OF COILS OF 12·5 INCH R. M. L. GUNS.

Coils.	Shrinkages. In Inches. Rear.	Shrinkages. In Inches. Front.	Shrinkages. In terms of diameter. Rear.	Shrinkages. In terms of diameter. Front.	Remarks.
Breech-piece .	·022	·026	D/857	D/807	Shrunk on A tube.
B coil . . .	·055	·01	D/561	D/190	" "
B tube . . .	·035	nil.	D/668	nil.	" "
C coil . . .	·03	·06	D/1134	D/729	Shrunk on to breech piece and rear end of 1 B coil."

The objections to fitting work by contraction where accuracy is required in the work are, that if the enveloping piece is of cast iron its form is apt to change from being heated. Furthermore, if the enveloping piece, which is always the piece to be heated, is of unequal thickness all round the bore, the thin parts are apt to become heated the most, and to therefore give way to the strain induced by contraction when cooling, which, while not, perhaps, impairing the fit, may vitiate the alignment of parts attached to it. Thus, a crank pin may be thrown out of true by the alteration of form induced first by unequal heating of the metal round the crank eye, enveloping the shaft; and secondly, because of the weakest side of the eye giving way, to some extent, to the pressure of the contracting strain. To counteract this, the strongest part of the enveloping piece should be heated the most, or if the enveloping piece be of equal strength all round its bore, it should be heated equally all round. To effect this object heated liquids, as boiling water, or heated fluids, as melted lead, may advantageously be employed.

In some practice, locomotive wheel tires are heated for shrinking in boiling water. The allowance for shrinkage is from ·075 millimètre to every mètre in diameter, which is ·02952 inch to every 39·37079 inches of diameter.

The employment of hot water, however, necessitates that the tires be bored very smoothly and truly, and that the wheel rim be similarly true and smooth, otherwise the amount of expansion thus obtained will be insufficient to maintain a permanent fit under the duty to which a wheel tire is submitted.

Shrinking is often employed to strengthen a weak place or part, or one that has cracked. The required size is, in this case, a cylindrical surface that is not a true cylinder, obtained by a rolling wheel rotated by friction over the surface to be enveloped by the band. Or if the surface is of a nature not to admit of this, a strip of lead or piece of lead wire may be lapped round it to get the necessary measurements.

The bands for this purpose are usually of wrought iron, and require in the case of irregular surfaces to be driven on by hammer

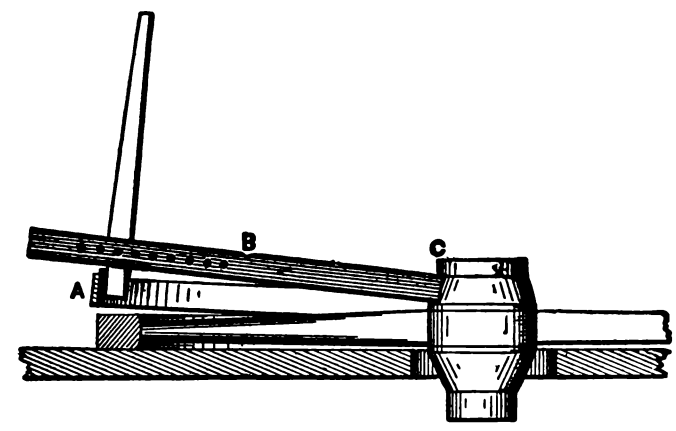

Fig. 1428.

blows, so that the fit may be correct. As the band is forced on a heavy hammer is held against it, to prevent its moving back and off the work as the other parts are forced on.

Very slight bands may be forced on by levers: thus, wagon makers use a lever or jack, such as in Fig. 1428, for forcing the tires on their wheels. The wheel is laid horizontally on a table as shown, and the tire A forced out by the vertical lever, the arm B affording a fulcrum for the lever, and itself resting against the hub C of the wheel.

The following extracts are from a paper read by Thomas Wrightson, before the Iron and Steel Institute of Great Britain.

"The large amount of attention bestowed upon the chemical properties of metals, and the scientific methods adopted for their investigation, have led to the most brilliant results in the history of iron and steel industries. It must not, however, be overlooked that iron and steel have highly important properties other than those which can be examined by chemical methods. The cause for so little having been done in accurate observation of the physical properties of iron is twofold: 1. The molecular changes of the metals are so slow, when at ordinary temperatures and when under ordinary conditions of strain, that reliable observations, necessarily extending over long periods, are difficult to obtain: 2. When the temperatures are high—at which times the greatest and most rapid molecular changes are occurring—the difficulties of observation are multiplied to such an extent that the results have not the scientific accuracy which characterizes the knowledge we have of the chemical properties of metals.

"The object of the present paper is to draw attention to some

* The temperature may be judged by color; at 500° F. iron has a blackish appearance; at 575° it is blue; at 775° red in the dark; at 1,500° cherry red, and so on, getting lighter in color, until it becomes white, or fit for welding, at about 3,000°.

phenomena connected with the physical properties of iron and steel, and to record some experiments showing the behavior of these metals under certain conditions.

"In experimenting the author has endeavored to adopt methods which would, as far as possible, eliminate the two great difficulties mentioned.

"It is obvious that the possible conditions under which experiments may be made are so numerous that all which any one experimenter can do is to record faithfully and accurately his observations, carefully specifying the exact conditions of each observation, and this must eventually lead to a more complete knowledge of the physical properties of the metals.

"The author's observations have been led in the following directions:—

"1. The changes in wrought and cast iron when subjected to repeated heatings and coolings.

"2. The effect upon bars and rings when different parts are cooled at different rates.

"3. These changes occurring in molten iron when passing from the solid to the liquid state, and *vice versâ*.

PART I.

"To illustrate the practical importance of knowing the effects of reiterated heating and cooling on iron plates, one of the most obvious examples is the action of heat upon the plates of boilers which are alternately heated and cooled, as in use or otherwise. When in use, the plates above the fire are subjected to the fierce flame of the furnace on one side, and on the other side to a temperature approximating to that of the steam and water in the boiler. Where the conducting surfaces of the metal are thickened at the riveted seams, a source of danger is frequently revealed in the appearance of what are known as 'seam-rips.'

"The long egg-ended boilers, much used in the North of England, are very subject to this breaking away of the seams. From some tests made by the writer on iron cut from the plates of two different boilers which had ripped at the seams, and one of which seam-rips had led to an explosion resulting in the destruction of much property, though happily of no lives, it was found that the heat acting on the bottom of the boiler had, through time, so affected the iron at the seam as to make it brittle, apparently crystalline in fracture, and of small tensile strength. Farther from the seam the iron appeared in both cases less injuriously affected. But although the alternate heating and cooling of the plates over a long period had produced this change in the molecular condition of the iron, a method of restoration presents itself in the process of annealing. In subjecting the pieces cut from the seam-rips to a dull red heat, and then allowing them to cool slowly in sawdust, the writer found that the fibrous character of the iron appeared again, and renewed testing showed that the ductility and tensile strength were restored.

"The same process of annealing is equally effectual in restoring the tenacity of iron in chains rendered brittle, and apparently crystalline, by long use, and is periodically applied where safety depends upon material in this form. Thus the heating and cooling of iron may be looked upon as the bane or the antidote according to the conditions under which the process is carried out. This affords an example of the importance of the physical effects produced by repeated changes of temperature. The change effected by one heating and cooling is so small that a cumulative method of experiment is the only one by which an observable result can be obtained, and this is the method adopted by the writer in the investigation now to be described.

"It is well known that if a wrought-iron bar be heated to redness, a certain expansion takes place, which is most distinctly observed in the direction of its length. It is also known, although not generally so, that if a bar be thus heated and then suddenly cooled in water, a contraction in length takes place, the amount of this contraction exceeding that of the previous expansion, insomuch that the bar when cooled is permanently shorter than it originally was. If this process of heating and cooling be repeated, a further amount of contraction is found to follow for many successive operations.

"Experiments Nos. 1 and 2 were made to verify this, and to show the increment of contraction after each operation.

"EXPERIMENTS ON WROUGHT-IRON BARS 1⅛ IN. SQUARE BY 30·05 IN. LONG, HEATED TO A DULL RED, THEN COOLED SUDDENLY IN WATER.

	Experiment No. 1. Common Iron.		Experiment No. 2. Best Iron.	
	Contraction.	Percentage on original length.	Contraction.	Percentage on original length.
	Inches.		Inches.	
After 1st cooling .	·04	·13	·04	·13
„ 2nd „ . .	·10	·33	·10	·33
„ 3rd „ . .	·16	·53	·14	·46
„ 4th „ . .	·17	·56	·16	·53
„ 5th „ . .	·23	·76	·20	·66
„ 6th „ . .	·28	·93	·24	·80
„ 7th „ . .	·31	1·03	·27	·89
„ 8th „ . .	·33	1·10	·30	1·00
„ 9th „ . .	·40	1·33	·33	1·10
„ 10th „ . .	·47	1·56	·39	1·30
„ 11th „ . .	·52	1·73	·42	1·40
„ 12th „ . .	·54	1·80	·47	1·56
„ 13th „ . .	·58	1·93	·51	1·70
„ 14th „ . .	·62	2·06	·54	1·80
„ 15th „ . .	·68	2·26	·56	1·86

"The Table of Experiment No. 5 shows that at the twenty-fifth cooling a contraction of 3·05 per cent. had taken place, or an average of ·122 per cent. after each cooling. This is almost identically the same average result as shown in Experiment No. 1 with straight bars.

"The above experiments only having reference to the permanent contraction of the iron in the direction of its length, the author made the following experiments to ascertain the effect in the other dimensions, and to see whether the specific gravity of the iron was affected in the reduction of dimensions.

"*Experiment No.* 6.—Wrought-iron plate, ·74 inch thick, planed on both surfaces and all edges to a form nearly rectangular, and of the dimensions given in Fig. 1429.

"*Specific Gravity.*—Two small samples were cut out of different

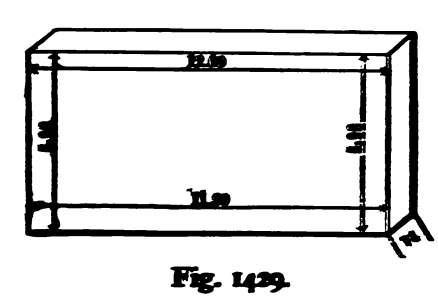

Fig. 1429.

parts of the same piece of plate from which the experimental piece was planed, and the specific gravity determined as follows:—

No. 1 piece . . . . 7·629 } Mean, 7·64.
No. 2 piece . . . . 7·651 }

"*Quality.*—Subjecting a piece to tensile strain in the direction of the grain, it broke at 21·2 tons per square inch of section, the ductility being such that an elongation of 8·3 per cent. occurred before fracture, with a reduction of 9·6 per cent. of the area of fracture. This may be looked upon as representing a fairly good quality of iron.

"A bar of wrought iron, 1⅛ inches square and 30·00 inches long, was heated to redness, and then allowed to cool gradually in air. Measurements after each of five coolings showed no perceptible change of length.

"*Experiment No.* 4.—Wrought-iron bar, 1⅛ inches square by 30 inches long, heated to a white heat and cooling gradually in air.

	Contraction.	Percentage on original length.	Remarks.
	Inches.		
After 1st cooling	No change.		——
„ 2nd „	„		——
„ 3rd „	·02	·07	——
„ 4th „	·05	·17	——
„ 5th „	·05	·17	——

"It may be remarked, that if the bars be heated to white heat a slight contraction does occur, as shown by Experiment No. 4, where a bar of the same dimensions as No. 3 contracted ·17 per cent. after the fifth cooling. As, however, the further remarks on this subject have only reference to bars heated to redness and then cooled, the writer would summarize the results of Experiments Nos. 1, 2, and 3, by stating that wrought-iron bars heated to redness permanently contract in their length along the fibre when cooled in water of ordinary temperature; but when cooled in air, they remain unchanged in length.

"To show that this is true as applied to circular hoops, Experiment No. 5 was made upon a wrought-iron bar of 1⅛ inches square in section, welded into a circular hoop, 57·7 inches outside circumference.

"*Experiment No.* 5.—Wrought-iron hoop, 1⅛ inches square by 57·7 inches outside circumference, heated to a dull red, then cooled suddenly in water.

	Contraction.	Percentage of original circumference.	Remarks.
	Inches.		
After 1st cooling	·06	·10	Red heat.
„ 2nd „	·06	·10	This was nearly white,
„ 3rd „	·16	·28	but before cooling
„ 4th „	·26	·45	red hot.
„ 5th „	·35	·61	
„ 6th „	·46	·80	
„ 7th „	·54	·93	
„ 8th „	·60	1·04	
„ 9th „	·68	1·18	
„ 10th „	·76	1·32	
„ 11th „	·80	1·38	
„ 12th „	·87	1·51	
„ 13th „	·94	1·63	
„ 14th „	1·00	1·73	
„ 15th „	1·08	1·90	
„ 20th „	1·30	2·25	On opposite edge 1·66;
„ 25th „	1·76	3·05	hoop splitting.

"This hoop was heated to redness and cooled in water twenty-five times, the circumference of the hoop being accurately measured after each cooling.*

"Two wrought-iron bars, 1⅛ inches square and 30·05 inches long, were selected.† No. 1 was of common "Crown" quality; No. 2 of a superior quality known as "Tudhoe Crown." These bars were heated to redness in a furnace and then plunged into water of ordinary temperature, the length being accurately measured after each cooling. After fifteen heatings and coolings the permanent contraction on No. 1 bar was 2·26 per cent. of the original length, and that on No. 2 bar 1·86 per cent., or an average on the two bars of about ·13 per cent. after each cooling, the increment of contraction being nearly equal after each successive operation. It is noticeable that after the first two coolings the better quality of iron did not contract quite so much as the common quality, and that in the latter the contraction was going on as vigorously at the fifteenth as at the first cooling.

"Similar bars of wrought iron, heated to redness and then allowed to cool in air at ordinary temperature, do not appear to suffer any permanent change in their length.

"Experiment No. 3 was made to verify this.

"*Experiment No.* 3.—Wrought-iron bar, 1⅛ inches square by 30 inches long heated to a dull red and cooled gradually in air.

	Contraction.	Percentage on original length.	Remarks.
After 1st cooling	No change.	—	—
„ 2nd „	„	—	—
„ 3rd „	„	—	—
„ 4th „	„	—	—
„ 5th „	„	—	—

The plate was subjected to fifty heatings to redness and subsequent coolings in water of ordinary temperature. At every tenth cooling accurate measurements were taken of the contraction in superficial dimensions, and Fig. 1430 shows the final form after fifty coolings. The intermediate measurements at every tenth cooling showed a uniform and gradual decrease in the superficial dimensions, but the thicknesses were only measured after the fifty coolings had been completed. The thickness appears to have varied considerably; in some places, notably towards the centre and outside edges, being much reduced. Between the centre and outside edges the thickness appears to have increased, and in some few places the plate has been split open. The average dimensions in inches before and after the experiment were as follows (dimensions of cracks being allowed for):—

	Average length.	Average breadth.	Average thickness.	Cubic inches capacity.
	Inches.	Inches.	Inches.	
Original	11·995	5·98	·74	53·08
After 50 coolings . .	11·25	5·59	·774	48·72
Per cent. variation from original . .	Decrease of 6·2 p. c.	Decrease of 6·52 p. c.	Increase of 4·6 p. c.	Decrease of 8·2 p. c.

Wrought iron rectangular plate. 14 "*thick x* 11" 995 *x* 598 *planed on both surface and edges. Heated to redness, and cooled in water* 50 *times. The dotted lines show original form, the black lines the form after the experiment.*

(Two-ninths of full size.)

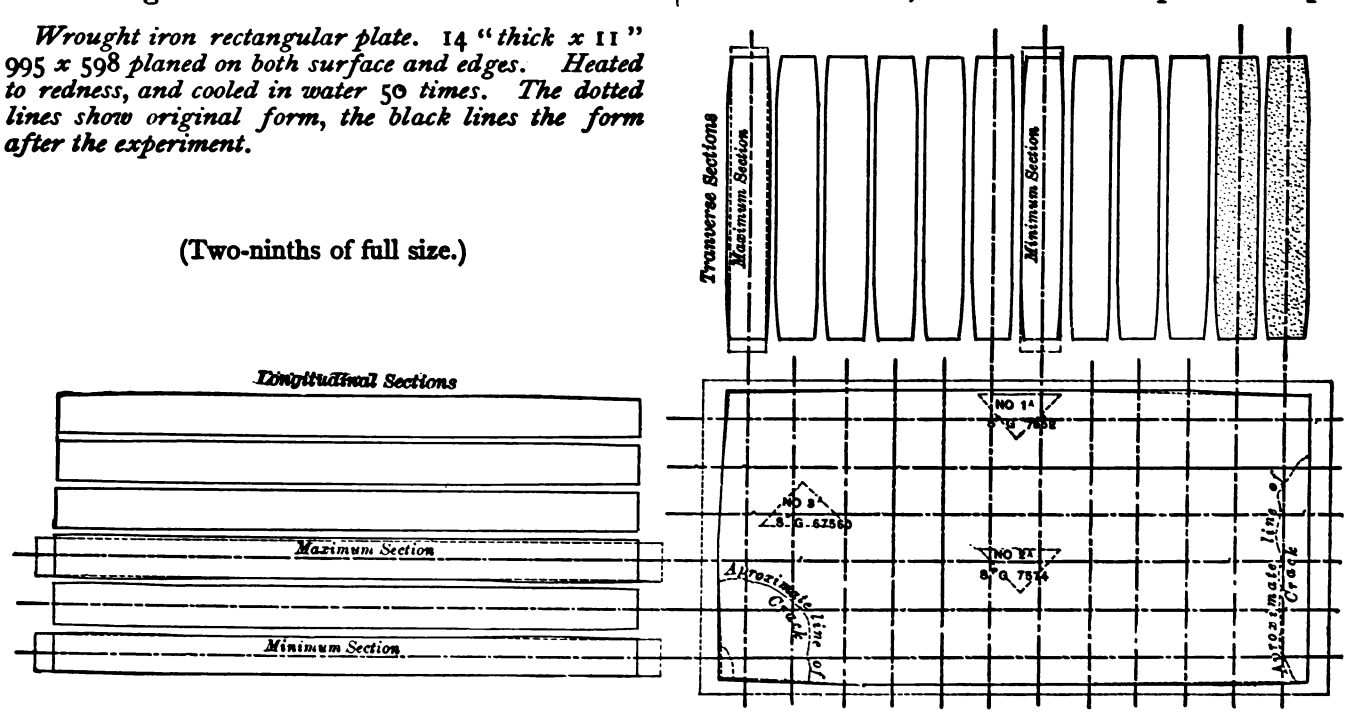

Fig. 1430.

* The lengths of circumference were taken, in this and other hoops, after each cooling, by encircling the periphery with a very fine piece of "crinoline" steel, the ends of which were made just to meet round the original hoop. By again encircling the hoop with the same piece of steel the expansion was shown by a gap between the ends, and a contraction by an overlap, either of which was measured with great accuracy by means of a finely divided scale.

† In some of these experiments the original sizes of the iron were only measured with an ordinary foot-rule, in which case the dimensions are given in the ordinary fraction used in expressing the mercantile sizes of iron. When accurate measurement was taken decimals are invariably used both in this paper and the Tables of Experiment.

"Three triangular pieces of iron were then cut out of the plate from positions indicated on the diagram; No. 1A from the part most reduced in thickness, No. 3A from the part most increased in thickness, and No. 2A from a part where the thickness was a mean between the thickest and thinnest part. The specific gravities were accurately determined as follows:—

No. 1A	. . . .	7·552 thinnest part.
No. 2A	. . . .	7·574 average thickness.
No. 3A	. . . .	7·560 thickest part.

"The average of these specific gravities is 7·562.

"The average before experiment was 7·64. Hence the average loss in specific gravity has been 1·02 per cent.

"The small triangular piece No. 1A, specific gravity 7·552 (already subjected to fifty heatings when forming part of the solid plate), was next heated and cooled fifty times more. The specific gravity at the end of the one hundred total coolings was 7·52, being ·43 per cent. lower than after fifty heatings in plate, and 1·57 per cent. lower than 7·64, the original mean specific gravity of the plate.

"The same piece, 1A, was then heated twenty-five times more, making 125 in all. On taking the specific gravity it was found to be 7·526, or practically the same as after 100 total heatings and coolings.

"It thus appears that there is an undoubted decrease in specific gravity on repeated heating and cooling as described up to one hundred coolings, the specific gravity decreasing as much as 1·57 per cent.; that this percentage appears to be less when the pieces

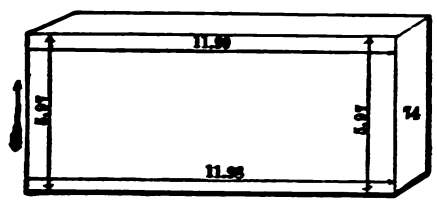

Fig. 1431.

of iron operated upon are very small; that while there is a decrease of specific gravity there is also a decrease of total volume.

"From the above it was evident that the volume was affected by several causes:—

"1. By the permanent contraction of the outer skin, either the volume would be lessened, or relief by bulging out the sides must occur.

"2. By the decrease of specific gravity an increase of volume must occur, which could also find relief in bulging.

"3. A diminution of the whole mass must occur through scaling of the surface.

"Having determined the change in specific gravity by Experiment 6, we only now want to determine the loss of volume due to surface scaling, and we can then infer the actual contraction of the outer skin.

"*Experiment No.* 7.—To ascertain the amount of scaling which took place in heating and cooling under same conditions as Experiment No. 6, a wrought-iron plate was cut from the same piece as No. 6, thickness ·74 in., planed on both surfaces and all edges to a form nearly rectangular, and to the dimensions given in Fig. 1431.

"The only difference (except the very small difference in the dimensions) between this and 1430, was that the principal grain of the iron was in 1431 in the direction of the arrow, whereas in the other it was lengthwise of the plate.

"This piece was subjected to fifty heatings to redness and sudden coolings in water of ordinary temperature, as in the case of No. 6. The change in form was exactly the same in general character, but the contraction was not quite so great either in length or breadth; the increase in thickness, however, was proportionately greater, the volume (measured by displacement of water) after fifty heatings being 48·6 cubic inches, which is nearly the same as in No. 6 after the same number of heatings. The weight of the piece:—

	Avoirdupois. lbs.	oz.	dr.
Before heating	14	10	15
After fifty heatings . . .	13	5	10
Difference	1	5	5

"This represents a loss of 9·07 per cent. of the original weight by scaling, and upon the whole original surface (sides and edges) represents a thickness of ·0284 of an inch for the fifty immersions, or ·00057 of an inch for the thickness of the film lost at each immersion over the whole surface.

"Calculating the weight of No. 6 before and after experiment from the volumes and specific gravities, we find the following:—

	Volume.		Mean specific gravity.		Weight of cubic inch water.		Pounds.
Weight before heating should be	53·08	×	7·64	×	·036	=	14·599
„ after „ „	48·72	×	7·562	×	·036	=	13·262
Difference in weight							1·337

the ascertained difference in the case of No. 7 being 1·332, thus sufficiently accounting for the discrepancy between specific gravity and change of volume by the scaling.

"By Experiment 7 it has been shown that the loss of thickness due to scaling after fifty immersions was ·0284 inch over the whole surface (sides and edges.) Therefore, assuming this scaling as uniform over the surface, the girth, whether measured lengthwise or breadthwise, should be eight times ·0284, or ·23 inch less after immersion than before. Now the gross loss of girth is:—

	Lengthwise.	Breadthwise.
	Inches.	Inches.
In No. 6	1·38	·86
In No. 7	1·2	·52
Or for both experiments a mean of . .	1·29	·69
Deducting from them the loss of girth due to scaling	·23	·23
Net contraction after fifty immersions . .	1·06	·46
Or in percentage of original girths, which were	25·46 per cent.	13·43 per cent.
We have a percentage of	4·16	3·42
Or for each immersion an average of . .	·083	·07

"Comparing these results with those of Experiments Nos. 1, 2, and 5, we find that the contraction of the skin of the plate is less for each immersion than that of a bar or hoop, in the proportion of ·125 to ·083. This is what might be expected, as the contraction of the plate is resisted by the volume of heated matter inside, which is eventually displaced by bulging, while the bar finds relief endwise without having to displace the interior.

"We have now before us the following facts, substantiated by the experiments described:—

"1. That in heating to redness, and then cooling suddenly in water at ordinary temperatures, bars and plates of wrought iron, a reduction of specific gravity takes place, the amount being about 1 per cent. after fifty immersions, and 1·57 per cent. after one hundred immersions, further heatings and coolings not appearing to produce further change.

"2. That a reduction of the surface takes place after each heating and cooling, this being due to two causes:—

"*a*. The scaling of the surface, which is shown to amount to a film over the (sides and edges) entire area of ·00057 inch in thickness for each immersion, or 0·284 inch for fifty immersions (Experiment 7).

"*b*. A persistent contraction, which takes place after each immersion. This varies according to the form of the iron, being in plates from ·07 per cent. to 0·83 per cent (Experiment 6), while in long bars it varies from ·122 to ·15 per cent. (Experiments 1, 2, and 5). This contraction continues vigorously up to fifty immersions, and probably much farther.

"3. That in the case of plates a bulging takes place on the largest surfaces, increasing the thickness towards the centres, although the edges diminish in thickness.

"4. That wrought-iron bars heated to redness, and allowed to cool slowly in air, do not show any change in dimensions (Experiment 3).

"The reduction of specific-gravity, and the bulging out of the sides, have been explained as follows by the learned Secretary of the Royal Society, Professor Stokes, who has taken considerable interest in these experiments, and who has kindly allowed the author to publish the explanation:

"'When the heated iron is plunged into water, the skin tends everywhere to contract. It cannot, however, do so to any significant extent by a contraction which would leave it similar to itself, because that would imply a squeezing in of the interior metal, which is still expanded by heat, and is almost incompressible. The endeavor, then, of the skin to contract is best satisfied, consistently with the retention of volume of the interior, by a contraction of the skin in the two longish lateral directions, combined with a bulging out in the short direction. The still plastic state of the interior permits of this change.

"'Conceive an india-rubber skin of the form of the plate in its first state, the skin being free from tension, and having its interior filled with water, treacle, or pitch. I make abstraction of gravity. It would retain its shape. But suppose, now, the india-rubber to be endowed with a tension the same everywhere similar to that of india-rubber that has been pulled out, what would take place? Why, the flat faces of considerable area, being comparatively weak to resist the interior pressure, would be bulged out, and the vessel would contract considerably in the long directions, increasing in thickness. This is just what takes place with the iron in the first instance. But when the cooling has made further progress, and the solidified skin has become comparatively thick and strong, the further cooling of the interior tends to make it contract. But this it cannot well do, being encased in a strong hide, and accordingly the interior tends to be left in a porous condition.'

"The reduction by scaling does not require any explanation. The only fact which appears unaccounted for is this persistent contraction of the cooled iron skin, which does not appear to be explicable on any mechanical grounds; and we are, therefore, obliged to look upon it as the result of a change in the distance of the molecules of the iron, caused by the sudden change of temperature in the successive coolings.

"Our next subject is the curious effect of cooling bars or rings by partial immersion in water. Bearing in mind the results at which we have arrived, viz., that wrought iron contracts when immersed in water after heating, and that when allowed to cool in air it remains of the same dimensions, let us ask what would be the behavior of a bar or circular hoop of iron cooled half in water and half in air, the surface of the water being parallel to the fibre and at right angles to the axis of the hoop?

"Arguing from the results of Experiments 1, 2, and 5, it might be expected that the lower portion cooled in water would suffer permanent contraction; and, arguing from Experiment 3, that the upper or air-cooled edge would not alter. This apparently legitimate conclusion is completely disproved by experiments. This will be seen by a reference to Experiments 8, 9, and 10.

"In No. 8 a circular hoop of wrought iron was forged out of a 3½-inch by ½-inch bar, the external diameter being about 18 inches, the breadth, ½ inch, being parallel to the axis of the hoop. This hoop, Fig. 1432, was heated to redness, then plunged into cold

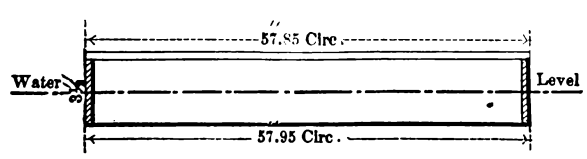

Fig. 1432.—Experiments with a circular hoop of wrought iron. Appearance of the hoop at the beginning.

water half its depth, the upper half cooling in air. The changes in the external circumference of the hoop were accurately measured after each of twenty successive coolings, at the end of which the external circumference of the water-cooled edge had increased 1·24 inches, or 2·14 per cent. of its original length, and the air-cooled edge had contracted 7·9 inches, or 13·65 per cent.

"*Experiment No.* 8.—Wrought-iron hoop, 3½ inches by ½ inch by about 18 inches in diameter, or exactly 57·85 inches in circumference at top, and 57·95 inches at bottom edge.

	Top Edge.		Bottom Edge.		Remarks.
	Contraction.	Percentage of original circumference.	Expansion.	Percentage of original circumference.	
	Ins.		Ins.		
After 1st dip .	·50	·86	·08	·14	
„ 2nd „ .	·99	1·71	·08	·14	
„ 3rd „ .	1·47	2·54	·26	·45	
„ 4th „ .	1·92	3·32	·30	·52	
„ 5th „ .	2·30	3·97	·34	·59	
„ 6th „ .	2·60	4·49	·40	·70	Slight crack in expanded edge.
„ 7th „ .	2·94	5·25	·44	·76	
„ 8th „ .	3·40	5·98	·50	·86	
„ 9th „ .	3·70	6·39	·56	·96	
„ 10th „ .	4·40	7·60	·62	1·07	
„ 11th „ .	4·42	7·64	·66	1·14	
„ 12th „ .	4·85	8·40	·70	1·22	
„ 13th „ .	5·24	9·02	·78	1·34	
„ 14th „ .	5·74	9·92	·80	1·39	
„ 15th „ .	6·00	10·37	·86	1·49	
„ 20th „ .	7·90	13·65	1·24	2·14	After deducting for a crack ·06 inch wide which appeared at sixth dip.

"It will be observed that we have here two remarkable phenomena: 1. The reversal of the expansion and contraction as described. 2. The very large amount of contraction on the upper edge compared with what was exhibited in Experiment 5 of entire submersion.

"The table showing Experiment 5 gives a contraction of 2·25 per cent. after the twentieth cooling, whereas the contraction on

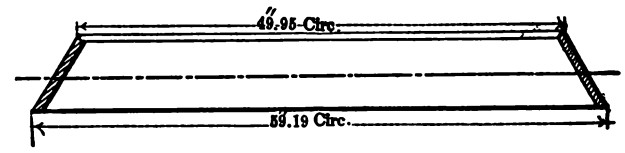

Fig. 1433.—Condition of the hoop after the twentieth cooling.

the air-cooled edge of Experiment 8 is 13·65 per cent., or six times the contraction of an entirely submerged hoop.

"To ascertain whether these unexpected phenomena had any connection with the circular form of the hoop, Experiment 9 was made with a straight bar of iron 3½ inches deep by ½ inch thick by 28·4 inches long.

"*Experiment No.* 9.—Wrought-iron bar, 3½ inches by ½ inch by 28·4 inches long, heated to a dull red, then quenched half its depth in water.

	Bottom Edge.		Top Edge.	
	Expansion.	Percentage on original length.	Contraction.	Percentage on original length.
	Inches.		Inches.	
After 1st cooling .	·05	·18	·26	·91
„ 2nd „ . .	·10	·35	·43	1·51
„ 3rd „ . .	·10	·35	·54	1·90
„ 4th „ . .	·14	·49	·75	2·64
„ 5th „ . .	·20	·70	·92	3·24
„ 6th „ . .	·30	1·05	1·25	4·40
„ 7th „ . .	·34	1·20	1·50	5·28
„ 8th „ . .	·38	1·34	1·56	5·53
„ 9th „ . .	·39	1·37	1·66	5·84
„ 10th „ . .	·40	1·40	1·76	6·19
„ 11th „ . .	·41	1·43	1·84	6·48
„ 12th „ . .	·44	1·55	1·96	6·90

"This was cooled half in air and half in water, and the length of the two edges measured accurately after each of twelve coolings. At the end of this experiment the air-cooled edge had contracted 6·9 per cent., while the water-cooled edge had expanded 1·55 per cent. of the original length. The effect on the

bar was to make it gradually curve, the water-cooled or extended edge becoming convex, the air-cooled or contracted edge concave.

"Experiment No. 10 was made in order to show the effect of

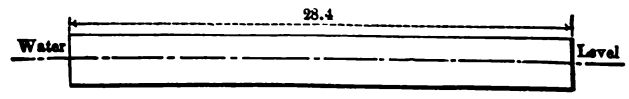

Fig. 1434.—Experiments with a wrought-iron bar. Appearance of the piece before heating.

reversing this cooling process. After five coolings, a bar of iron, 28 inches long, 3½ inches deep, and ½ inch thick, was curved so that the versed sine of its air-cooled edge was 1½ inches. The coolings were then reversed, what was the air-cooled edge being then immersed in water. After five more coolings the bar was

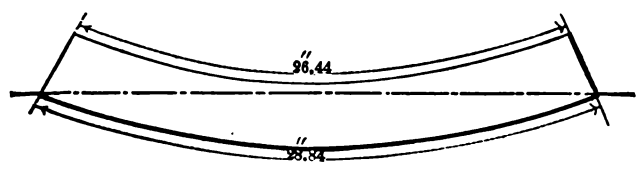

Fig. 1435.—Appearance of the bar after the twelfth cooling.

restored to within ⅛ inch of being straight, and the eleventh cooling threw the concavity on the other side of the bar.

"*Experiment No.* 10.—Wrought-iron flat bar, 28 inches long by 3½ inches by ½ inch, heated to dull red, then quenched half its depth in water, up to five heats, then the opposite edge dipped.

	Versed sine of concave, *i.e.* air-cooled edge.		Reversed Cooling. Versed sine of concave, *i.e.* now water-cooled edge.
	Inches.		Inches.
1st cooling	1 1/16	6th cooling	1 3/16
2nd ,,	1 2/16	7th ,,	7/8
3rd ,,	1 3/16	8th ,,	3/4 scant.
4th ,,	1 4/16	9th ,,	5/8 full.
5th ,,	1 1/2	10th ,,	1/2
		11th ,,	Brought concavity ⅛ in. on other side.

"When the author had proceeded thus far, these curious results were shown to several leading scientific men, who expressed interest in the subject, which encouraged the author to extend

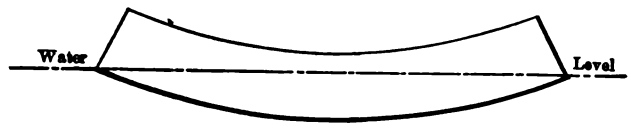

Fig. 1436.—After the preceding experiment the same bar was reheated and reversed in the water, the eleventh cooling resulting in the above form, the bar bending in the opposite direction from that previously shown.

his experiments under varied conditions with a view of ascertaining the cause for these anomalous effects. These experiments (Nos. 11 to 17) are fully recorded, and the results shown on the diagrams; the actual rings are also on the table before you.

"*Experiment No.* 11.—Wrought-iron hoop, turned and bored, 37·1 inches, outside circumference, by 2·95 inches deep by ·44 inch thick, the grain of the iron running the short way of the bar from which the hoop was made, heated to redness, then cooled half its depth in water (see Fig. 1437 at A for final form of hoop after ten heatings and coolings).

	Top Edge.		Bottom Edge.	
	Contraction.	Percentage on original length.	Expansion.	Percentage on original length.
	Inches.		Inches.	
After 1st cooling	·3	·83	·05	·13
,, 2nd ,,	·64	1·72	·12	·32
,, 3rd ,,	1·02	2·75	·22	·60
,, 4th ,,	1·38	3·72	·30	·80
,, 5th ,,	1·62	4·37	·37	1·00
,, 10th ,,	3·14	8·46	·76	2·05

"*Experiment No.* 12.—Wrought-iron hoop, turned and bored, 6 inches diameter (18·85 inches circumference) outside, by 2 inches deep by ·375 inch thick, heated to redness, then cooled, with lower edge barely touching the water (see Fig. 1437 at B for final form of hoop after twenty heatings and coolings).

	Top Edge.		Bottom Edge.	
	Contraction. Outside circumference.	Percentage of original circumference.	Contraction. Outside circumference.	Percentage of original circumference.
	Inches.		Inches.	
After 5th cooling	·10	·53	·16	·85
,, 10th ,,	·22	1·17	·34	1·80
,, 15th ,,	·32	1·70	·48	2·54
,, 20th ,,	·48	2·54	·62	3·30

"*Experiment No.* 13.—Wrought-iron hoop, turned and bored, 6 inches diameter (18·85 inches circumference) outside by 2 inches deep by ·375 inch thick, heated to redness, then cooled one-fourth its depth in water (see Fig. 1437 at C for final form of hoop after twenty heatings and coolings).

	Top Edge.		Bottom Edge.	
	Contraction.	Percentage of original circumference.	Extension.	Percentage of original circumference.
	Inches.		Inches.	
After 1st cooling	·06	·32	·02	·10
,, 5th ,,	·28	1·50	A hair's-breadth contraction.	
,, 10th ,,	·56	3·00	Returned to original circumference.	
,, 15th ,,	·78	4·14	0·2 contraction.	·10
,, 20th ,,	1·12	6·00	0·2 contraction.	·10

Experiment No. 14.—Wrought-iron hoop, turned and bored. 6 inches diameter (18·85 inches circumference) outside by 2 inches deep by ·375 inch thick, heated to redness, then cooled one-half its depth in water (see Fig. 1437 at D for final form of hoop after twenty heatings and coolings).

	Top Edge.		Bottom Edge.	
	Contraction. Outside circumference.	Percentage of original circumference.	Expansion. Outside circumference.	Percentage of original circumference.
	Inches.		Inches.	
After 5th cooling	·46	2·44	·06	·32
,, 10th ,,	·96	5·00	·09	·48
,, 15th ,,	1·34	7·10	·18	·96
,, 20th ,,	1·80	9·10	·26	1·38

Experiment No. 15.—Wrought-iron hoop turned and bored, 6 inches in diameter (18·85 inches circumference) outside by 2 inches deep by ·375 inch thick, heated to redness, then cooled three-fourths its depth in water (see Fig. 1437 at E for final form of hoop after twenty heatings and coolings).

	Top Edge.		Bottom Edge.	
	Contraction.	Percentage of original circumference.	Expansion.	Percentage of original circumference.
	Inches.		Inches.	
After 1st cooling	·05	·26	·015	·08
,, 5th ,,	·30	1·60	·02	·10
,, 10th ,,	·56	3·00	A hair's-breadth contraction.	
,, 15th ,,	·74	3·92	·02 contraction.	·10
,, 20th ,,	1·02	5·40	·03 contraction.	·10

Experiment No. 16.—Cast-copper ring, turned and bored to same dimensions as Nos. 12, 13, 14, and 15, heated to redness, then cooled half its depth in water (see Fig. 1437 at F for final form of hoop after twenty heatings and coolings).

	Top Edge.		Bottom Edge.	
	Contraction.	Percentage of original circumference.	Expansion.	Percentage of original circumference.
	Inches.		Inches.	
After 1st cooling . .	·01	·05	·05	·26
„ 2nd „ . .	·01	·05	·08	·42
„ 3rd „ . .	·02	·10	·14	·75
„ 4th „ . .	·02	·10	·17	·90
„ 5th „ . .	No change from original size from 5th to 20th cooling.		·22	1·17
„ 10th „ . .			·40	2·13
„ 15th „ . .			·56	3·00
„ 20th „ . .			·70	3·70

"It will be unnecessary to occupy much time in analyzing the experiments, as any one who takes a practical interest in the subject will have full information in the diagrams and tables. Professor Stokes drew attention to the fact that, in 1863, similar phenomena had been noticed by Colonel Clark, of the Royal Engineers. His experiments, made at the Royal Arsenal, Woolwich, were published in the 'Proceedings of the Royal Society,' and Professor Stokes had himself attached an explanatory note, the outline of which was as follows:—

"Imagine a cylinder divided into two parts by a horizontal plane at the water-line, and in this state immersed after heating. The under part, being in contact with water, would rapidly cool and contract, while the upper part would cool but slowly. Consequently by the time the under part had pretty well cooled, the upper part would be left jutting out; but when both parts had cooled their diameters would again agree. Now in the actual experiments the independent motion of the two parts is impossible on account of the continuity of the metal; the under part tends to pull in the upper, and the upper to pull out the under. In this contest the cooler metal, being the stronger, prevails, and so the upper part gets pulled in a little above the water-line while still hot. But it has still to contract in cooling, and this it will do to the full extent due to its temperature, except in so far as it may be prevented by its connection with the rest. Hence, on the whole, the effect of this cause is to leave a permanent contraction a little above the water-line, and it is easy to see that the contraction must be so much nearer to the water-line as the thickness of the metal is less, the other dimensions of the hollow cylinder and the nature of the metal being given. When the hollow cylinder is very short, so as to be reduced to a mere hoop, the same cause operates, but there is not room for more than a general inclination of the surface, leaving the hoop bevelled.

"The expansion of the bottom edge was not noticed in Colonel Clark's paper, perhaps owing to the much smaller hoops which he used in experimenting. Accepting Professor Stokes' explanation of the top contraction, it appears that expansion of the bottom may be accounted for by the reacting strain put on the cooled edge when forcing in the top edge, acting in such a way as to prevent the cooled edge coming quite to its natural contraction, and this, when sufficiently great, expresses itself in the form of a slight expansion.

"*Experiment No.* 14.—Forged steel hoop, turned and bored, 18·53 inches in circumference outside by 2·375 inches deep by ·27 inch thick, heated to redness, then cooled one-half its depth in water (see Fig. 1437 at G for final form of hoop after three heatings and coolings).

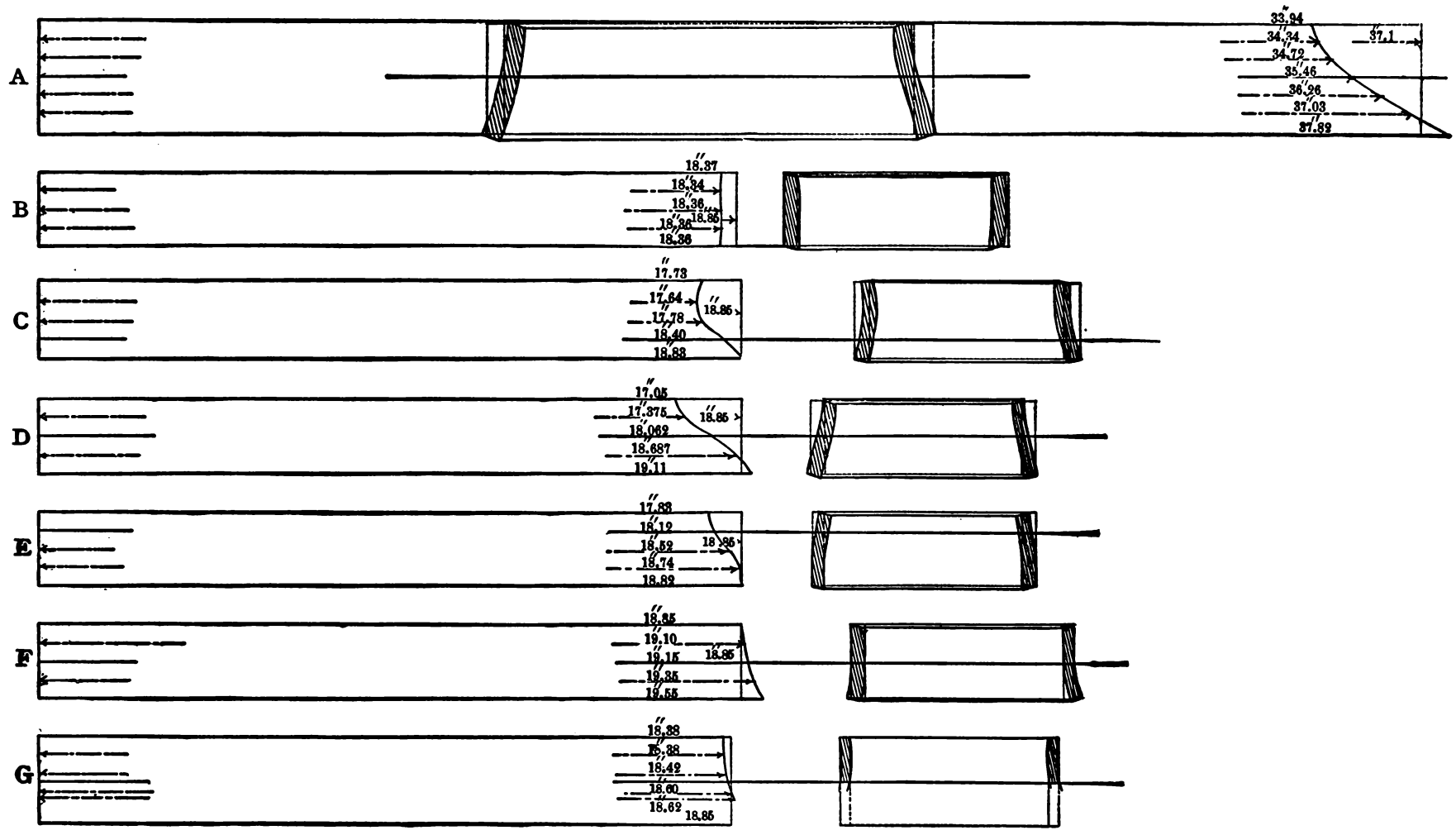

Fig. 1437.

	Top Edge.		Bottom Edge.		
	Contraction.	Percentage of original length.	Expansion.	Percentage of original length.	
	Inches.		Inches.		
After 1st cooling	·06	·32	—	—	Cracked at water-cooled edge one-third depth of ring.
„ 2nd „	·12	·64	—	—	
„ 3rd „	·20	1·08	·05	·27	After allowing for three small cracks in bottom edge."

The shrinkage of iron and steel by cooling rapidly is sometimes taken advantage of by workmen to refit work, the principles involved in the process being as follows:—

Suppose in Fig. 1438 *a a* represents a piece of wrought-iron tube that has been heated to a bright red and immersed in cold water *c c* from the end B to D, *until that end is cold.* The part submerged and cold will be contracted to its normal diameter and have regained its normal strength, while the part above the

water, remaining red-hot, will be expanded and weak. There will be, then, a narrow section of the tube, joining the heated and expanded part to the cooled and contracted part, and its form will be conical, as shown at D D. Now, suppose the tube to be slowly lowered in the water, the cold metal below will compress the heated metal immediately above the water-line, the cone section D being carried up into the metal before it has had time to cool;

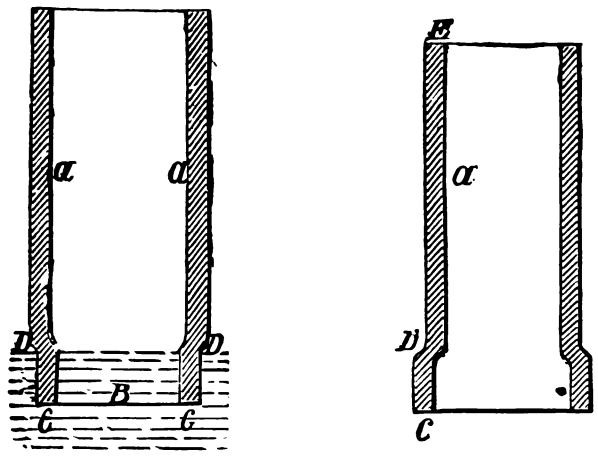

Fig. 1438.

and the tube removed from the water when cold will be as shown in Fig. 1438, from *c* to D, representing the part first immersed and cooled. To complete the operation the tube must be heated again from the end *c* to a short distance past D, and then immersed from E nearly to D, and held still until the submerged part is cold,

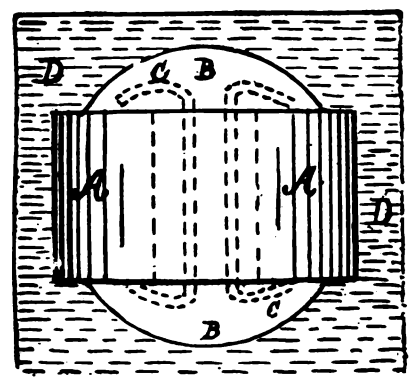

Fig. 1439.

when the tube must be slowly lowered to compress the end *c* D, making the tube parallel, but smaller in diameter and in bore, while leaving it of its original length, but thickening its wall.

This process may, in many cases, be artificially assisted. Suppose, for example, a washer is too large in its bore; it should have its hole and part of its radial faces filled with fire-clay, as shown in Fig. 1439, in which A is the washer and B B the clay, *c c* being pieces of wire to hold the fire-clay and prevent its falling off. The washer should be heated to a clear red and plunged in the water D D, which will cool and shrink the exterior and exposed

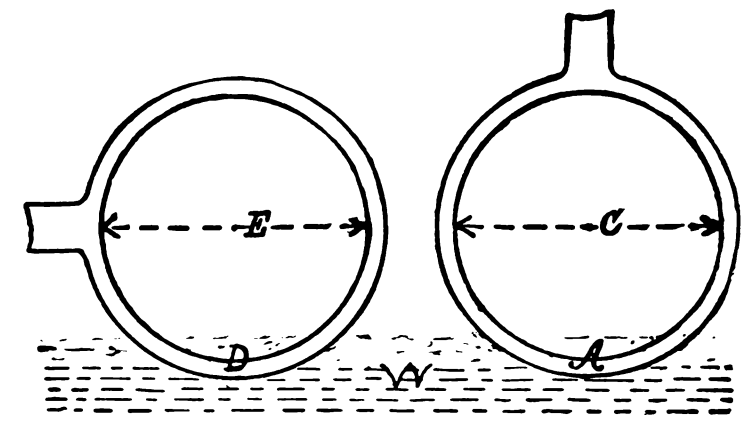

Fig. 1440.

metal in advance of the interior, which will compress to accommodate the contraction of the outer metal, hence the hole will be reduced. This operation may be repeated until the hole be entirely closed.

Another method of closing such a piece as an eye of large diameter compared to its section, is shown in Fig. 1440; first dipping the heated eye at A and holding it there till cold and then slowly lowering it into the water, which would close the diameter across C, and, after reheating, dipping at D till cold, and then slowly immersing, which would close the eye across E. To shrink a square ring, the whole ring would require to be heated and a side of the square dipped, as shown in Fig. 1441, until quite cold,

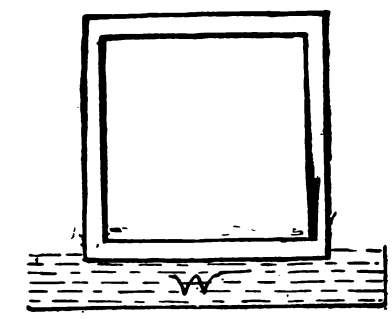

Fig. 1441.

and then immersed slowly for about an inch, the operation being performed with a separate heating for each side. Connecting rod straps, wheel-tires, and a large variety of work may be refitted by this process, but in each case the outside diameter will be reduced.

CHAPTER XV.—MEASURING TOOLS.

FOR what may be termed the length measurements of lathe work it is obvious that caliper gauges, such as shown in Fig. 1402, may be employed. Since, however, these length measurements rarely require to be so accurate as the diametrical measurements, the ordinary lineal rule is very commonly employed in work not done under the standard gauge system. It is obvious, however, that when a number of pieces are to be turned to corresponding lengths, a strip of sheet iron, or of iron rod made to the required length, may be employed; a piece of sheet iron filed to have the necessary steps being used where there are several steps in the work; but if the lineal measuring rule is used, and more than one measurement of length is to be taken, some one point, as one end of the work, should be taken wherefrom to measure all the other distances. Suppose, for example, that Fig. 1442 represents a crank pin requiring to have its end collar ¼ inch thick, the part A 2 inches long, part B 3 inches long, collar C ¼ inch thick, and the part D 7 inches long. If the length of each piece were taken

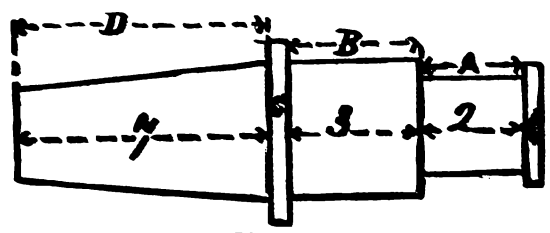

Fig. 1442.

separately and independently of the others, any errors of measurement would multiply; whereas, if some one point be taken as a point wherefrom to measure all the other distances, error is less liable to occur, while at the same time an error in one measurement would not affect the correctness of the others. In the case of the crank pin shown, the collar C would be the best point wherefrom to take all the other measurements. First, it would require to be made to its proper thickness, and the lengths of B, A, and the end collar should be measured from its nearest radial face. The length of D should then be measured from the same radial face, the thickness of the collar being added to the required length of D, or D may be measured from the nearest radial face of C, providing C be of its exact proper thickness. In measuring the length of the taper part D, a correct measurement will not be obtained by laying the rule along its surface, because that surface does not lie parallel to its axis, hence it is necessary to apply the measuring rule, as shown in Fig. 1443, in which S is a straight-edge held

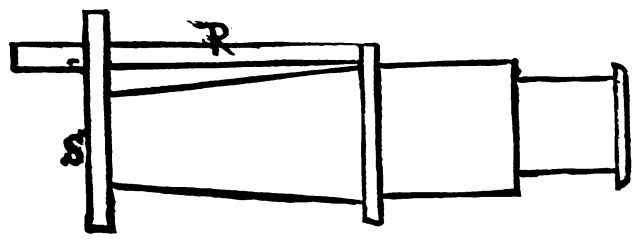

Fig. 1443.

firmly against the radial face of the crank pin (the radial face being of course turned true), and R is the measuring rule placed true with the axial line of the crank pin. Whenever the diameters of the lengths to be measured vary, this mode of measuring must be employed. On small work, or on short distances requiring to be very exact, a gauge such as shown in Fig. 1444 at A may be employed, which will not only give more correct results, but because it is more convenient, as it can be conveniently held or tried to the work with one hand while the other hand is applied to the feed screw handle to withdraw the cutting tool at the proper moment, and to the feed nut to unlock it and stop the feed.

On long work a wooden strip is the best, especially if the work has varying diameters and a number of pieces of work require to be made exactly alike. In Fig. 1445 S represents the wooden strip, and W the work. The strip is marked across by lines representing the distances apart the shoulders of the work require

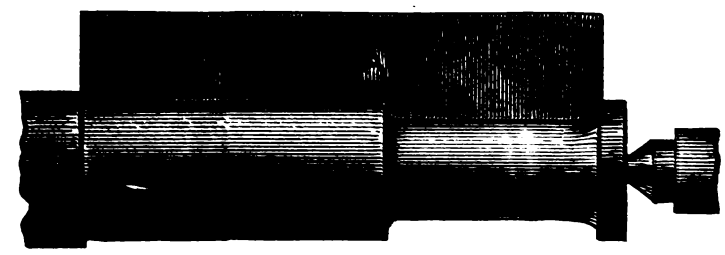

Fig. 1444.

to be; thus the lines A, B, C, D, E, F, G, represent the distances apart of the radial faces *a*, *b*, *c*, *d*, *e*, *f*, *g*, on the work, and these lines will be in the same plane as the shoulders if the latter are turned to correct lengths. To compare the radial faces with the lines, a straight-edge must be held to each successive shoulder (as already described) that is of smaller diameter than the largest radial face on the work.

If the wooden strip be made the full length of the work the dog or clamp driving the work will require to be removed every time the wooden gauge is applied, and since the work must be turned end for end in the lathe to be finished, it would be as well to let the length of the wood gauge terminate before reaching the work driver, as, say, midway between E and F.

When a lineal distance is marked by lines, and this distance is to be transferred to another piece of work and marked thereon by

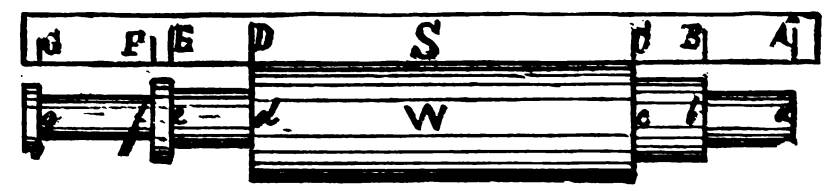

Fig. 1445.

lines, the operation may be performed, for short distances or radii, by the common compasses employed to mark circles, but for greater distances where compasses would be cumbersome, the trammels are employed.

Fig. 1446 represents a pair of trammels made entirely of metal, and therefore suitable for machinists' use, in which the points require to be pressed to the work to mark the lines. A A represents a bar of square steel; or for very long trammels wood may be used. B represents a head fastened tightly to one end, and through B passes the leg or pointer C, which is thus adjustable as to its projecting distance, as C can be fastened in any position by the thumb-screw D. The head E is made to a good sliding fit upon the bottom and two side faces of A A; but at the top there is sufficient space to admit a spring, which passes through E. F is the leg screwed into E, which is locked in position by the thumb-screw G. The head E is thus adjustable along the whole length of the bar or rod A A. The object of the spring is as follows:—If the head E were made to fit the bar A A closely on all four sides, the burrs raised upon the top side of the rod A A by the end of the thumb-screw G would be likely to impede its easy motion. Then again, when the sliding head E has worn a trifle loose upon the bar A A, and is loosened for adjustment, it would be liable to hang on one side, and only to right itself when the screw G brought it to a proper bearing upon the under side of the bar A A, and thus tightening the head E would alter the adjustment

of the point. The spring, however, always keeps the lower face of the square hole through E bearing evenly against the corresponding face of the bar, so that tightening the screw G does not affect the adjustment, and, furthermore, the end of the set-screw, bearing against the spring instead of against the top of the rod, prevents the latter from getting burred.

The flat place at I I is to prevent the burrs raised by the thumb-screw end from preventing the easy sliding of leg C through B.

In some cases a gib is employed, as shown at A in Fig. 1447,

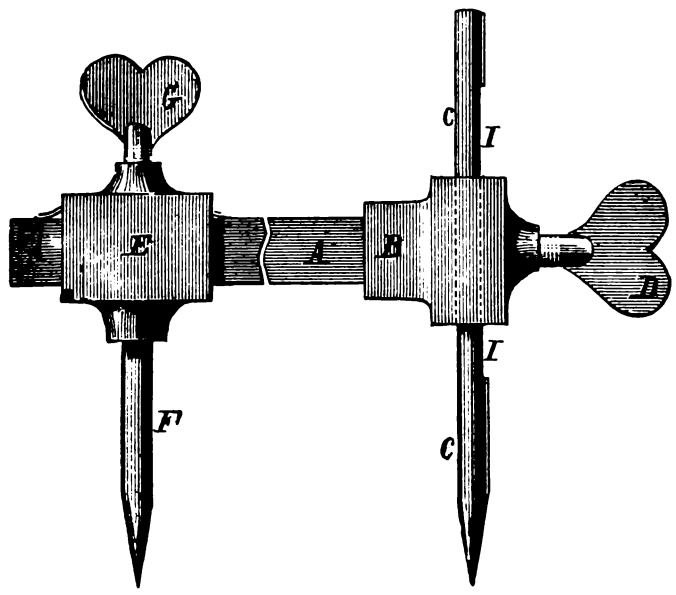

Fig. 1446.

instead of a spring, the advantage being that it is less liable to come out of place when moving the head along the bar.

The trammels should always be tried to the work in the same relative position as that in which they were set, otherwise the deflection of the bar may vitiate the correctness of the measurement; thus, if the rod or bar stood vertical when the points were adjusted for distance to set them to the required distance, it should also stand vertical upon the work when applied to transfer that distance, otherwise the deflection of the bar from its own weight will affect the correctness of the operation. Again, when applied

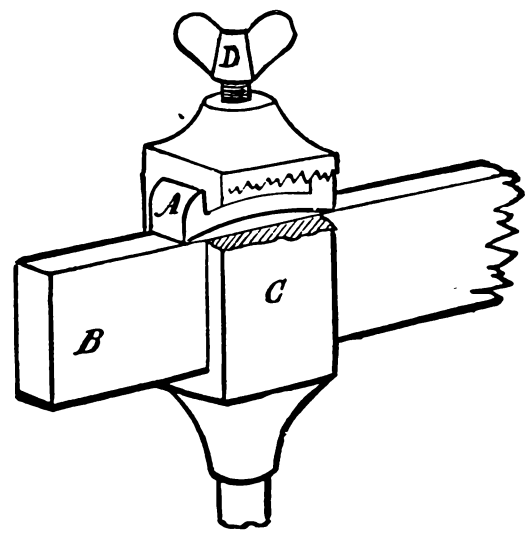

Fig. 1447.

to the work the latter should be suspended as nearly as convenient in the same position as the work will occupy when erected to its place.

Thus, suppose the trammels be set to the crank pin centres of a locomotive, then the bar will stand horizontally. Now the side rod, or coupling rod, as it may be more properly termed, should be stood on edge and should rest on its ends, because its bearings wherever it will rest when on the engine are at the ends; thus the deflection of the trammel rod will be in the same direction when applied to the work as it was when applied to the engine, and the deflection of the coupling rod will be in the same direction when tried by the trammel as when on the engine. The importance of this may be understood when it is mentioned that if the coupling rod be a long one, resting it on its side and supporting it in the middle instead of at its ends will cause a difference of $\frac{1}{50}$th inch in its length.

Another lineal measuring gauge employed in the machine shop is shown in Fig. 1448. It is employed to measure the distance between two faces, and therefore in place of inside calipers, in cases where from the extreme distance to be measured it would require the use of inside calipers too large to be conveniently handled. Its application is more general upon planing machine work than any other, although it is frequently used by the lathe hand or turner, and by the vice hand and erector. It consists of two legs A and B, held together by the screws C D, which screw into nuts. These nuts should have a shoulder fitting into the slots in both legs, so as to form a guide to the legs. The screws are set up so as to just bind both legs together but leaving them free enough to move under a slight friction. The gauge is then set to length by lightly striking the ends E, and when adjusted the

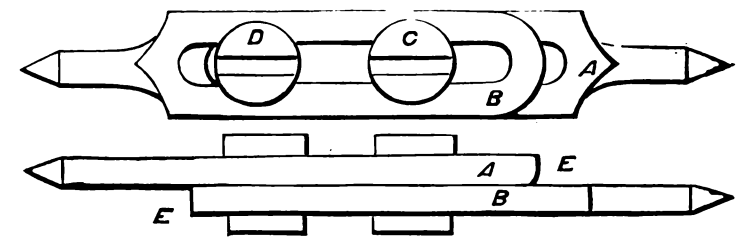

Fig. 1448.

screws C D are screwed firmly home. The ends E are rounded somewhat, as is shown, to prevent them from swelling or burring by reason of the blows given to adjust them.

For striking circles we have the compasses or dividers, which are made in various forms.

Thus, Fig. 1449 represents a pair of spring dividers, the bow spring at the head acting to keep the points apart, and the screw and nut being employed to close and to adjust them.

Another form is shown in Fig. 1450, the legs being operated by a right and left-hand screw, which may be locked in position by the set-screw shown.

For very small circles the fork scriber shown in Fig. 1451 is an excellent tool, since it may be used with great pressure so as to cut a deep line in the surface of the work. This tool is much used by boiler makers, but is a very useful one for the machinist for a variety of marking purposes, which will be described with reference to vice work.

For larger work we have the compasses, a common form of which is shown in Fig. 1452, in which the leg A is slotted to receive the arc piece C, which has a threaded stem passing

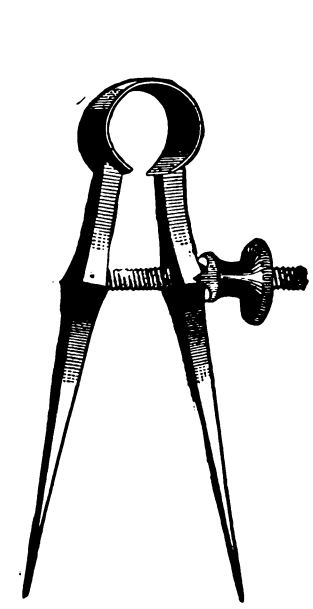

Fig. 1449.

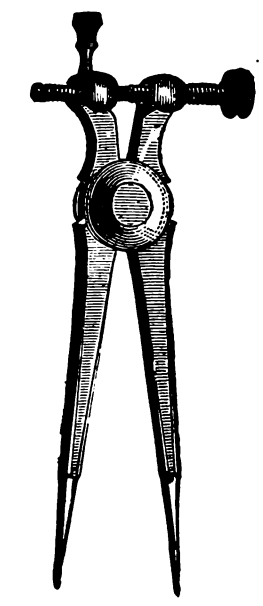

Fig. 1450.

through E, and is provided with a nut at B; at D is a spring which holds the face of the nut B firmly against the leg E; at A is a thumb-screw for securing the leg to the arm C. The thumb-screw A being loosened, the compass legs may be rudely adjusted for distance apart, and A is then tightened. The adjustment is finally made by operating the nut B, which, on account of its fine thread, enables a very fine adjustment to be easily made.

It is often very convenient to be able to set one leg of a pair of dividers to be longer than the other, for which purpose a socket B, Fig. 1453, is provided, being pierced to receive a movable piece A, and split so that by means of a set-screw C the movable piece A may be gripped or released at pleasure.

For finding the centres of bodies or for testing the truth of a centre already marked, the compass calipers shown in Fig. 1454,

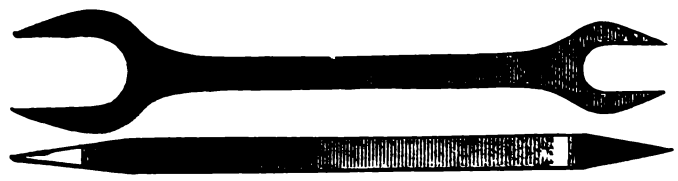

Fig. 1451.

are employed. It is composed of one leg similar to the leg of a pair of compasses, while the other is formed the same as the leg of an inside caliper. The uses of the compass calipers are manifold, the principal being illustrated as follows :—

Let it be required to find the centre of a rectangular block, and they are applied as in Fig. 1455, the curved leg being rested against the edge and a mark being made with the compass leg.

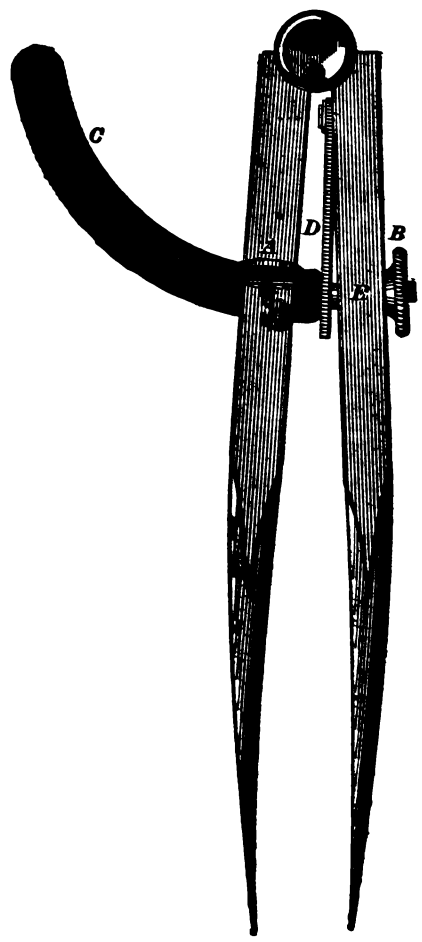

Fig. 1452.

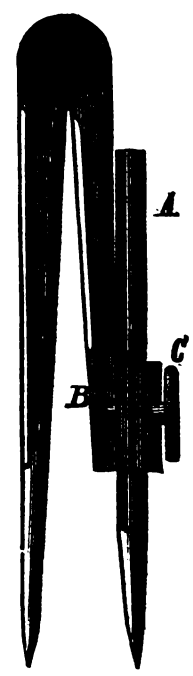

Fig. 1453.

This being done from all four sides of the work gives the centre of the piece.

In the case of a hole its bore must be plugged and the compass calipers applied as in Fig. 1456.

For marking a line true with the axial line of a cylindrical body, we have the instrument W in Fig. 1457, which is shown applied to a shaft S. The two angles of the instrument are at a right

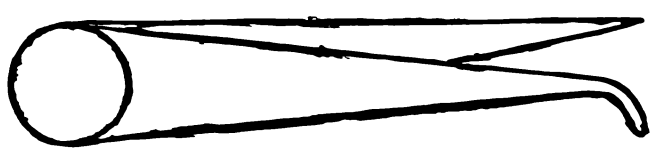

Fig. 1454.

angle one to another, so that when placed on a cylindrical body the contact will cause the edge of W to be parallel with the axis of the shaft. The edge is bevelled, as shown, so that the lines of division of inches and parts may come close to the work surface, and a scriber may be used to mark a line of the required length. A scriber is a piece of steel wire having a hardened sharp point wherewith to draw lines.

On account of the instrument W finding its principal application in marking key seats upon shafts, it is termed the "key-seat rule."

For marking upon one surface a line parallel to another surface, the scribing block or surface gauge shown in Fig. 1458 is employed. It consists of a foot piece or stand D carrying a stem. In the form shown this stem contains a slot running centrally up it. Through this slot passes a bolt whose diameter close to the head is larger than the width of the slot, so that it is necessary

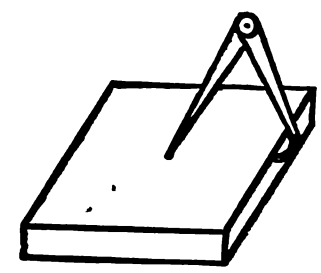

Fig. 1455.

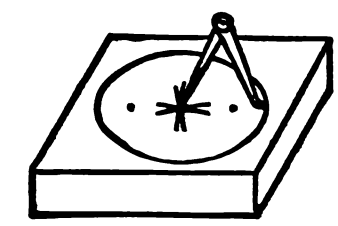

Fig. 1456.

to file flat places on the side of the slot to permit the bolt to pass through it.

On the stem of the bolt close to the head, and between the bolt head and the stem of the stand, passes the piece shown at F. This consists of a piece of brass having a full hole through which the bolt passes clear up to the bolt head. On the edge view there is shown a slot, and on each side of the slot a section of a hole to receive a needle. A view of the bolt is given at E, the flat place to fit the slot in the stem being shown in dotted lines,

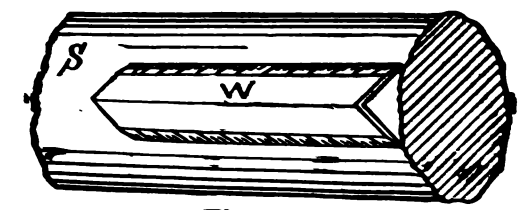

Fig. 1457.

and the space between the flat place and the bolt head is where the piece of brass, shown in figure, passes. This piece of brass being placed on the bolt, and the bolt being passed through the slot in the stem, the needle is passed through the split in the brass, and the thumb-nut is screwed on so that tightening up the thumb-nut causes the needle to be gripped in the brass split in any position in the length of the stem slot in which the bolt may be placed. The advantage of this form over all others is that the needle may be made of a simple piece of wire, and there-

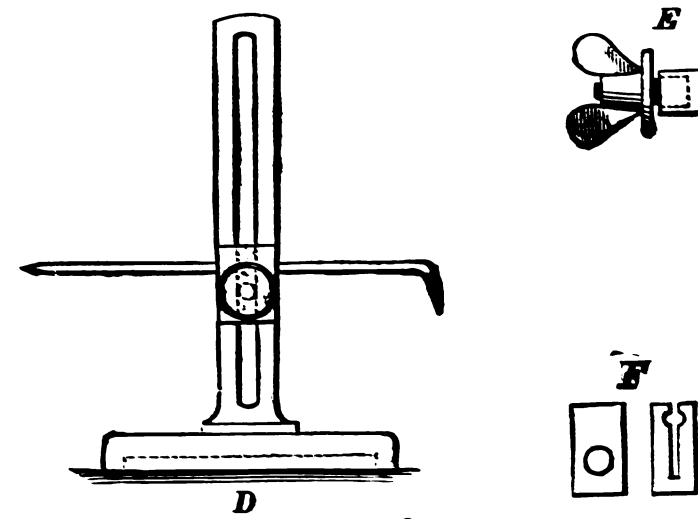

Fig. 1458.

fore very readily. Again, the piece of brass carrying the needle may be rotated upon the pin any number of consecutive rotations backwards and forwards, and there is no danger of slacking the thumb-nut, because the needle is on the opposite side of the stem to what the thumb-nut is, and the flat place prevents the bolt from rotating. Furthermore, the needle can be rotated on the bolt for adjustment for height without becoming loosened, whereas when the thumb-nut is screwed up firmly the needle is held very fast indeed, and finally all adjustments are made with a single thumb-nut.

The figure represents a view of this gauge from the bolt head and needle side of the stem, the thumb-nut being on the opposite side.

This tool finds its field of application upon lathe work, planer work, and, indeed, for one purpose or another upon all machine tools, and in vice work and erecting, examples of its employment being given in connection with all these operations.

Fig. 1459 represents a scribing block for marking the curves to which to cut the ends of a cylindrical body that joins another, as

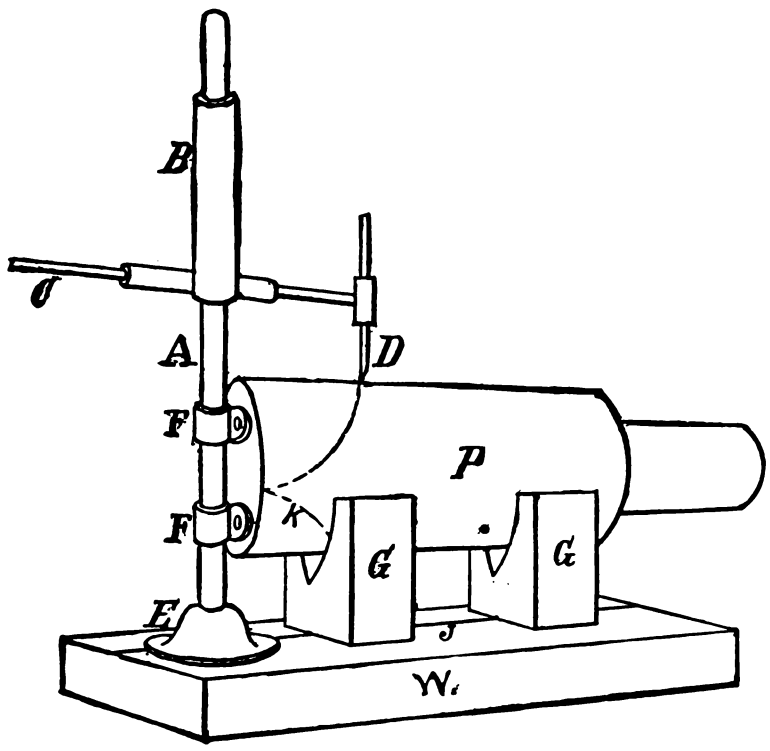

Fig. 1459.

in the case of a T-pipe. It is much used by pattern-makers. In the figure A is a stem on a stand E. A loose sleeve B slides on A carrying an arm C, holding a pencil at D. A piece of truly surfaced wood or iron W, has marked on it the line J. Two Vs, G, G, receive the work P. Now, if the centres of G, G and of the stand E all coincide with the line J then E will stand central to P, and D may be moved by the hand round P, being allowed to lift and fall so as to conform to the cylindrical surface of P, and a line will be marked showing where to cut away the wood on that side, and all that remains to do is to turn the work over and mark a similar line diametrically opposite, the second line being dotted in at K.

The try square, Fig. 1460, is composed of a rectangular back F, holding a blade, the edges of the two being at a right angle

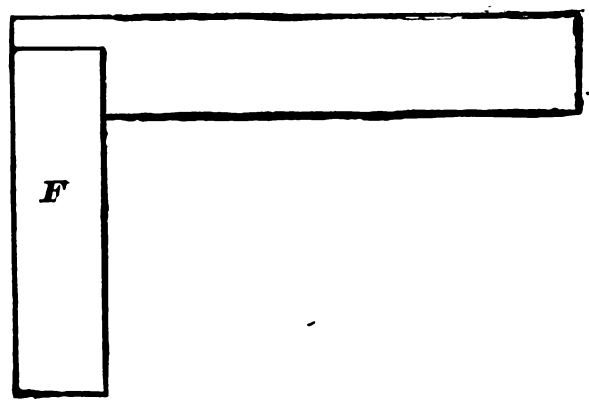

Fig. 1460.

one to the other and as straight as it is possible to make them. The form shown in the figure is an L-square.

Fig. 1461 represents the T-square, whose blade is some distance from the end of the back and is sometimes placed in the middle. When the square edges are at a true right angle the square is said to be true or square, the latter being a technical term meaning at practically a true right angle.

The machinists' square is in fact a gauge whereby to test if one face stands at a right angle to another. It is applied by holding one edge firmly and fairly bedded against the work, while the other edge is brought to touch at some part against the face to be tested.

If in applying a square it be pressed firmly into the corner of the work, any error in the latter is apt to escape observation, because the square will tilt and the error be divided between the two surfaces tested. To avoid this the back should be pressed

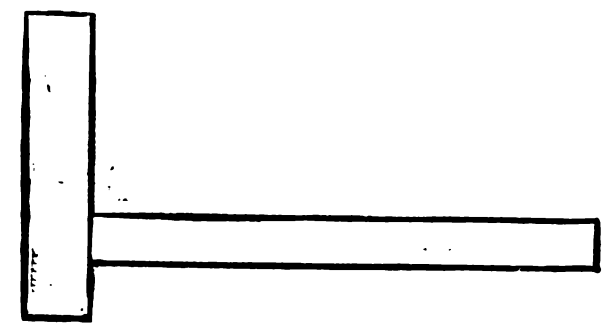

Fig. 1461.

firmly against one surface of the work and the square edge then brought down or up to just touch the work, which it will do at one end only if the work surface is out of square or not at a right angle to the face to which the square back is applied.

An application of the T-square is shown in Fig. 1462, in which W is a piece of work requiring to have the face A of the jaw C at a right angle to the face B C. Sometimes the L-square is employed in conjunction with a straight-edge in place of the T-square This is usually done in cases where the faces against which the square rests are so far apart as to require a larger

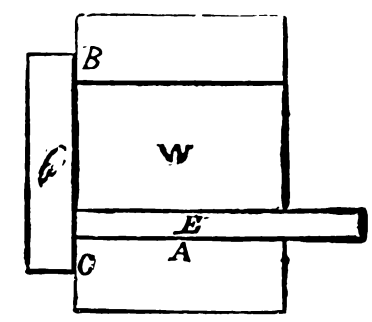

Fig. 1462.

T-square than is at hand. It is obvious that if the face A of the work is the one to be tested, the edge *b* is the part pressed to the work; or per contra, if B C is the face to be tested, the edge of the blade is pressed to the work.

The plane of the edges of a square should, both on the blade and on the back, stand at a right angle to the side faces of the body or stock, and the side of the blade should be parallel to the sides of the back and not at an angle to either side, nor should it be curved or bent, because if under these conditions the plane of the square edge is not applied parallel

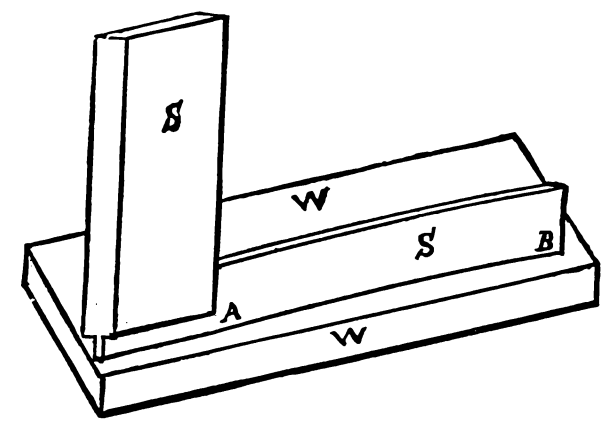

Fig. 1463.

with the surface of the work the square will not test the work properly. This is shown in Fig. 1463, in which W is a piece of work, and S a square having its blade bent or curved and applied slightly out of the vertical, so that presuming the plane of the blade edge to be a right angle to the stock or back of the square the plane of the blade edge will not be parallel with the plane of the work, hence it touches the work at the ends A B only,

whereas if placed vertically the blade edge would coincide with the work surface all the way along. It is obvious then that by making the edge of the blade at a right angle, crossways as well as in its length, to the stock, the latter will serve as a guide to the eye in adjusting the surface of the blade edge parallel to that of the work by placing the stock at a right angle to the same.

There are three methods of testing the angle of a square blade

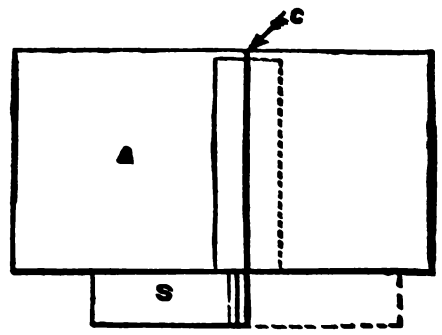

Fig. 1464.

to the square back. The first is shown in Fig. 1464, in which A is a surface plate having its edge a true plane. The square S is placed in the position shown by full lines pressed firmly to the edge of the surface plate and a fine line is drawn with a needle point on the face of the surface plate, using the edge of the square blade as denoted by the arrow C as a guide. The square is then turned over as denoted by the dotted lines and the edge is again brought up to the line and the parallelism of the edge with the

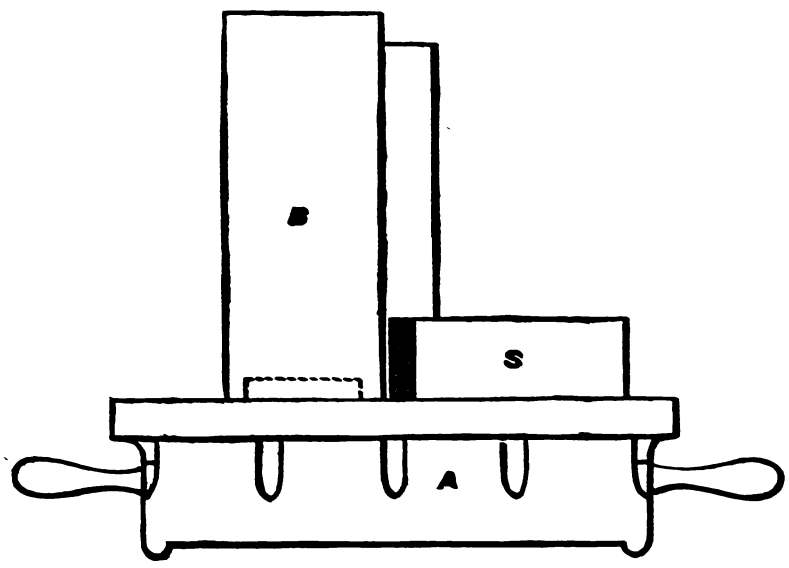

Fig. 1465.

line denotes the truth, for whatever amount the blade may be out of true will be doubled in the want of coincidence of the blade edge with the line.

A better plan is shown in Fig. 1465, in which A is the surface plate, B a cylindrical piece of iron turned true and parallel in the lathe and having its end face true and cupped as denoted by the dotted lines so as to insure that it shall stand steadily and true. The surface of A and the vertical outline of B forming a true right

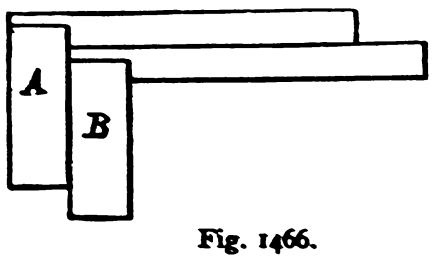

Fig. 1466.

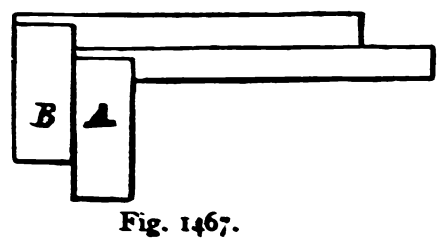

Fig. 1467.

angle we have nothing to do but make the square S true to them when placed in the position shown.

If we have two squares that are trued and have their edges parallel, we may test them for being at a right angle by trying them together as in Figs. 1466 and 1467, in which A, B, are the two squares which, having their back edges pressed firmly together when quite clean, must coincide along the blade edges; this being so we may place them on a truly surfaced plate as shown in Fig. 1468, in which S is one square and S' the other, P being the surface plate. Any want of truth in the right angle will be shown doubled in amount by a want of coincidence of the blade edges.

For some purposes, as for marking out work on a surface plate, it is better that the square be formed of a single piece having the

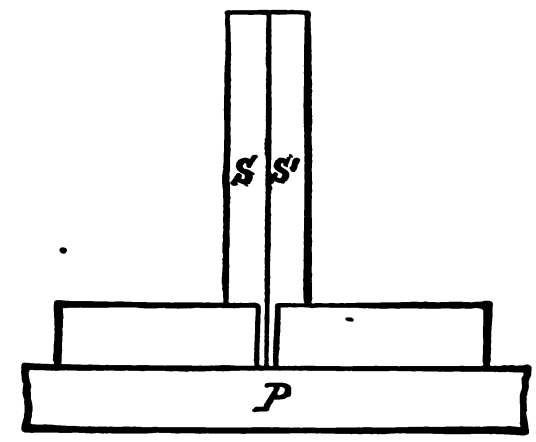

Fig. 1468.

back and blade of equal thickness, as shown in Fig. 1469, which represents a side and edge view of an L and T-square respectively.

For angles other than a right angle we have the bevel or bevel square (as it is sometimes called), shown in Fig. 1470, A representing the stock or back, and B the blade, the latter being

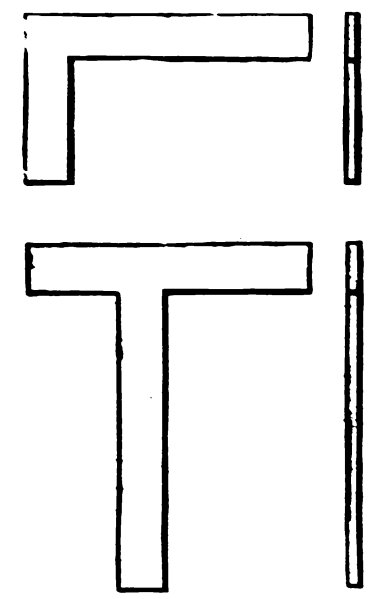

Fig. 1469.

provided with a slot so that it may be extended to any required distance (within its scope) on either side of the stock. C is the rivet, which is made sufficiently tight to permit of the movement by hand of the blade, and yet it must hold firmly enough to be used without moving in the stock. Instead of the rivet C, however, a thumb-screw and nut may be employed, in which case,

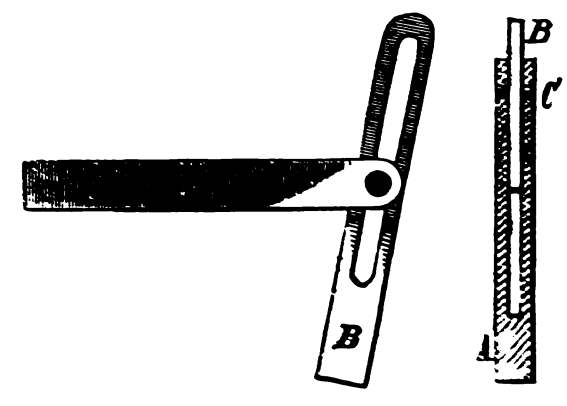

Fig. 1470.

after the blade is set to the required angle, it may be locked in the stock by the thumb-screw.

Fig. 1471 represents a Brown and Sharpe bevel protractor, with a pivot and thumb-nut in the middle of the back with a half-circle struck from the centre of the pivot and marked to angular degrees. The pointer for denoting the degrees of angle has also a thumb-screw and nut so that the blade may, by loosening the

pivot and pointer, be moved to project to the required distance on either side of the back.

Swasey's improved protractor, however, is capable of direct and easy application to the work, forming a draughtsman's protractor, and at the same time a machinist's bevel or bevel square, while possessing the advantage that there is no protruding back or set-

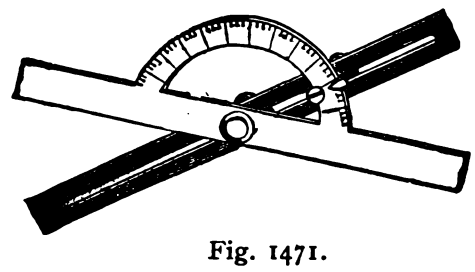

Fig. 1471.

screw to prevent the close application of the blade to the work. This instrument is shown in Fig. 1472. The blade A is attached to the circular piece D, the latter being recessed into the square B B, and marked with the necessary degrees of angle, as shown, while the mark F upon the square B serves as an index point. The faces of A, B B, and D are all quite level, so that the edges will meet the lines upon the work and obviate any liability to

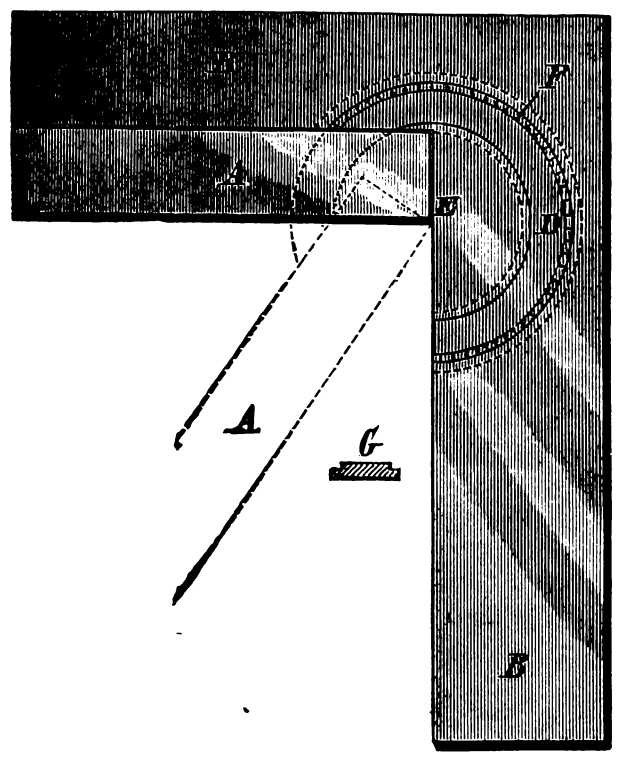

Fig. 1472.

error. The piece D is of the shape shown in section at G, which secures it in B B, the fit being sufficient to permit of its ready adjustment and retain it by friction in any required position. The dotted lines indicate the blade as it would appear when set to an angle, the point E being the centre of D, and hence that from which the blade A operates.

On account, however, of the numerous applications in machine

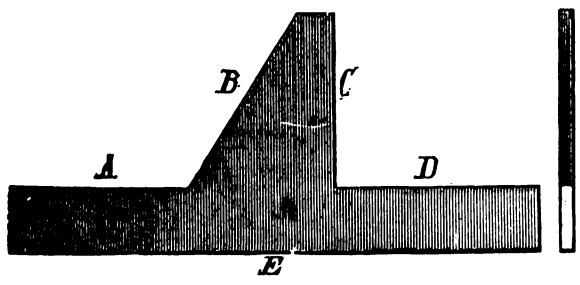

Fig. 1473.

work of the hexagon (as, for instance, on the sides of both heads and nuts), a special gauge for that angle is requisite, the usual form being shown in Fig. 1473. The edges A, B, form a hexagon gauge, and edges C, D, form a square, while the edge E serves as a straight-edge.

All these tools should be made of cast steel, the blades being made of straight saw blade, so that they will not be apt to per-

manently set from an ordinary accidental blow; while, on the other hand, if it becomes, as it does at times, necessary to bend the blade over to the work, it will resume its straightness and not remain bent.

For testing the straightness, in one direction only, of a surface the straight-edge is employed. It consists in the small sizes of a

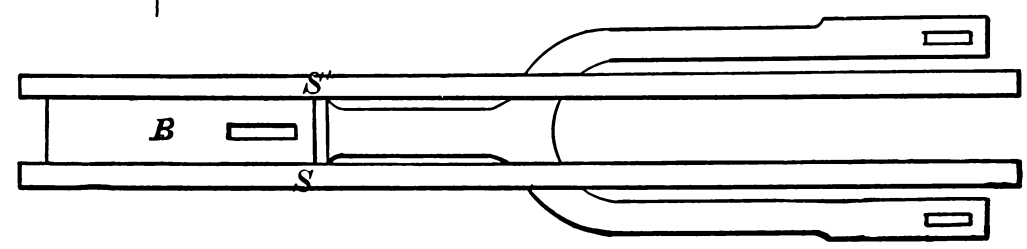

Fig. 1474.

piece of steel whose edges are made straight and parallel one to the other. When used to test the straightness of a surface without reference to its alignment with another one, it is simply laid upon the work and sighted by the eye, or it may have its edge coated with red marking, and be moved upon the work so that its marking will be transferred to the high spots upon the work. The marking will look of the darkest colour in the places where the straight-edge bears the hardest. The most refined use

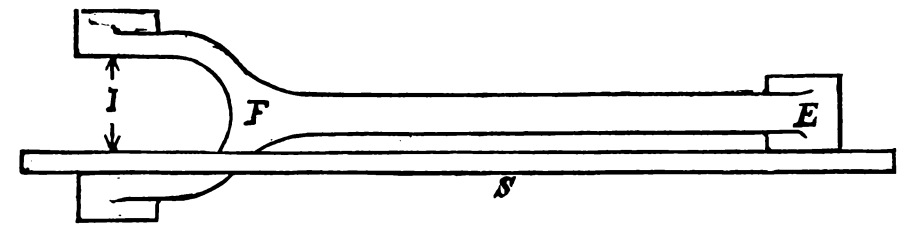

Fig. 1475.

of the straight-edge is that of testing the alignment of one surface to the other, and as this class of work often requires straight-edges of great length, as six or ten feet, which if made of metal would bend of its own weight, therefore they are made of wood.

Fig. 1474 represents an example of the use of straight-edge for alignment purposes. It represents a fork and connecting rod, and it is required to find if the side faces of the end B are in line with the fork jaws. A straight-edge is held firmly against the

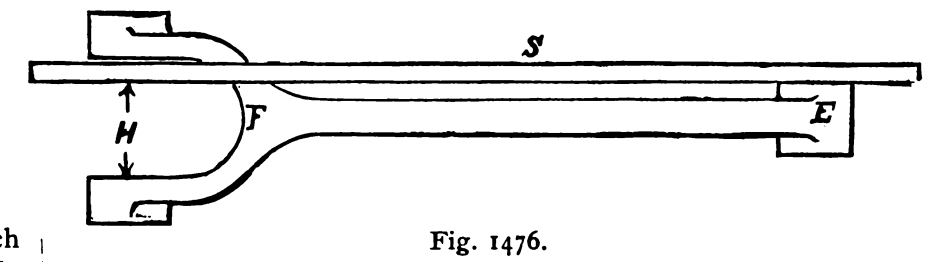

Fig. 1476.

side faces of B in the two positions S and S', and it is obvious that if they are in line the other end will be equidistant from the jaw faces, at the two measurements.

Figs. 1474, 1475, 1476, 1477, and 1478 represent the process of testing the alignment of a link with a straight-edge. First to test if the single eye E is in line with the double eye F at the other end, the straight-edge is pressed against the face of E, as in Fig.

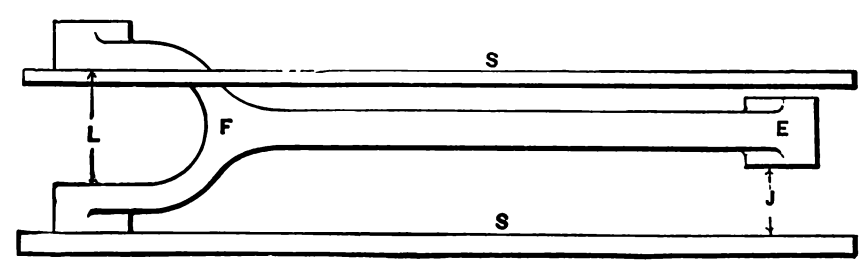

Fig. 1477.

1475, and the distance I is measured. The straight-edge is then applied on the other side of E, as in Fig. 1476, and the distance H is measured, and it is clear that if distances H and I are equal, then E is in line with the double eye. To test if the double eye F is in line with the single eye E, the straight-edge is pressed against the face of the double eye in the positions shown in Figs.

1477 and 1478, and when distances J and K measure equal the jaws of the double eye F are in line with those of the single eye E.

It is obvious, however, that we have here tested the alignment in one direction only. But to test in the other direction we may

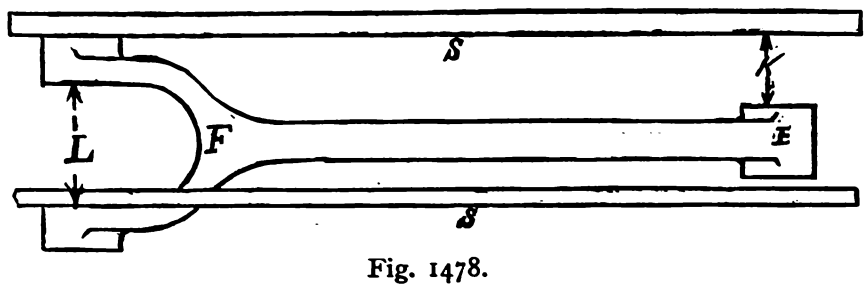

Fig. 1478.

use a pair of straight-edges termed winding strips, applying them as in Fig. 1479, to test the stem, and as in Fig. 1480 to test the eye E, and finally placing the winding strip C on the eye of F, while strip D remains upon E, as in Fig. 1480. The two strips are sighted together by the eye, as is shown in Fig. 1481, in which S and S' are the strips laid upon a connecting rod, their upper edges being level with the eye, hence if they are not in line the eye will readily detect the error. Fig. 1482 represents an application to a fork ended

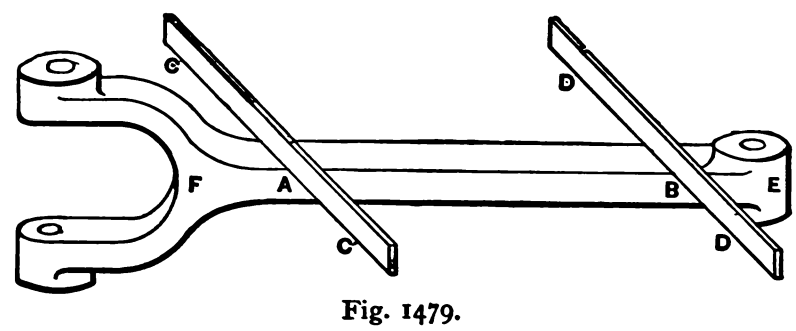

Fig. 1479.

connecting rod. Pattern-makers let into their winding strips pieces of light-coloured wood as at C, C, C, C, in Fig. 1483, so that the eye may be assisted in sighting them.

It is obvious that in using winding strips they should be

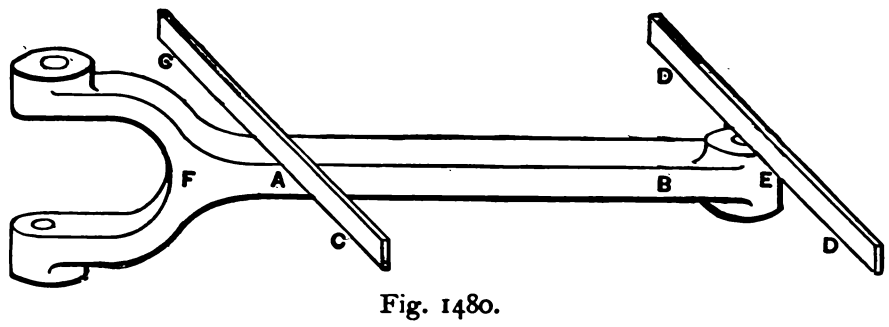

Fig. 1480.

parallel one to the other; thus, for example, the ends A, B, in Fig. 1481, should be the same distance apart as ends C, D.

If less than three straight-edges or parallel strips are to be trued they must be trued to a surface plate or its equivalent, but if a pair are to be made they should have the side faces made true, and be riveted together so that their edges may be trued

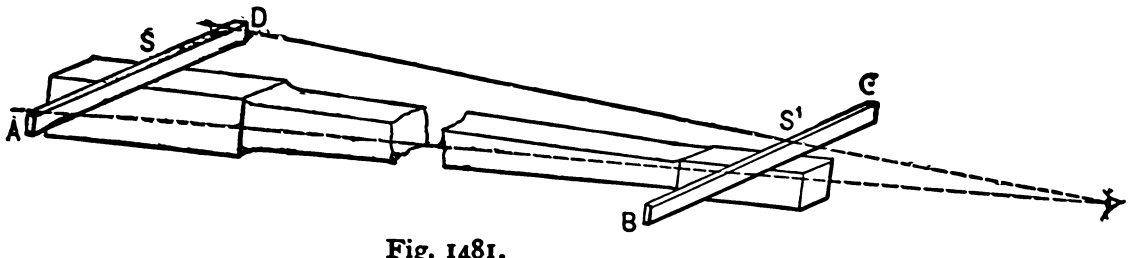

Fig. 1481.

together, and equal width may be more easily obtained. For this purpose copper rivets should be used, because they are more readily removable, as well as less likely to strain the work in the riveting.

By riveting the straight-edges together the surface becomes broader and the file operates steadier, while the edges of the straight-edge are left more square. Furthermore parallelism is more easily obtained as one measurement at each end of the batch will test the parallelism instead of having to measure each one separately at each end. If three straight-edges are to be made they may be riveted together and filed as true as may be with the testing conveniences at hand, but they should be finally trued as described for the surface plate.

In using straight-edges to set work, the latter is often heated to facilitate the setting, and in this case the straight-edge or parallel strips should be occasionally turned upside down upon the work, for if the heated work heats one side of the straight-edge more than the other the increased expansion of the side most heated will bend the straight-edge or strips, and throw them out of true.

In applying a straight-edge to test work it must never be

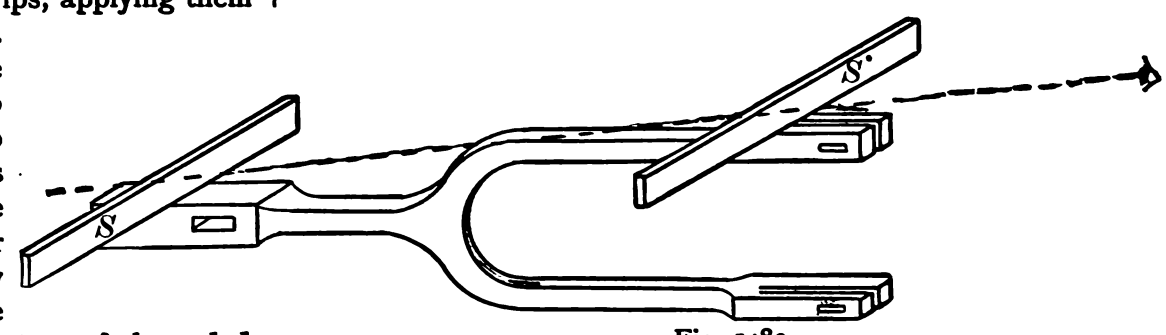

Fig. 1482.

pressed to the work surface, because in that case it will show contact with the work immediately beneath the parts where such pressure is applied. Suppose, for example, a true straight-edge be given a faint marking, and be applied to a true surface, the straight-edge itself being true; then if the hands are placed at each end of the straight-edge, and press it to the work while the straight-edge is given motion, it will leave the heaviest marks at

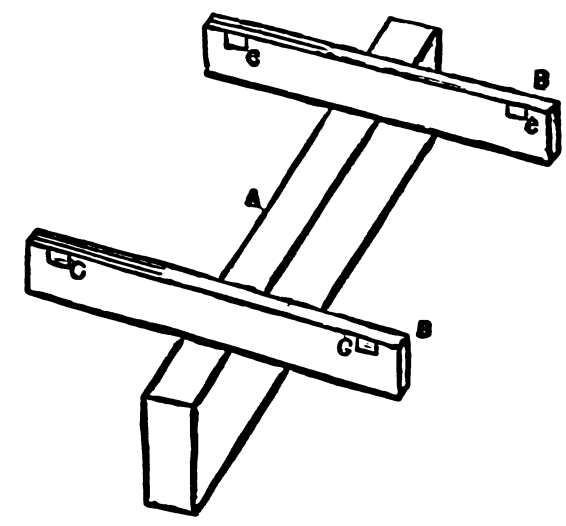

Fig. 1483.

and near the ends as though the work surface was slightly hollow in its length; while were the hand pressure applied to the middle of the length of the straight-edge the marks on the work would show the heaviest in the middle as though the work surface were rounding. This arises from the deflection due to the weakness of the straight-edge.

For testing the truth of flat or plane surfaces the machinist employs the surface plate or planometer. The surface plate is a plate or casting having a true flat surface to be used as a test plate for other surfaces. It is usually made of cast iron, and sometimes of chilled cast iron or hardened cast steel, the surface in either of these two latter cases being ground true because their hardness precludes the possibility of cutting them with steel tools. A chilled or hardened surface plate cannot, however, be so truly surfaced as one that is finished with either the scraper or the file.

The shape of the surface plate is an element of the first importance, because as even the strongest bars of metal deflect from their own weight, it is necessary to shape the plate with a view to make this deflection as small as possible in any given size and weight of plate. In connection, also, with the shape we must

consider the effect of varying temperatures upon the metal, for if one part of the plate is thinner than another it will, under an increasing temperature, heat more rapidly, and the expansion due to the heating will cause that part to warp the plate out of its normal form, and hence out of true. The amount that a plate will deflect of its own weight can only be appreciated by those who have had experience in getting up true surfaces, but an idea may be had when it is stated that it can be shown that it is

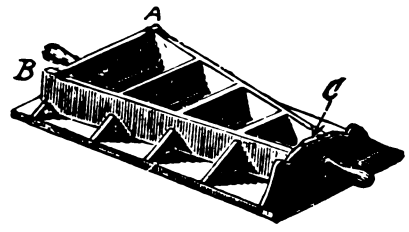

Fig. 1484.

easily detected in a piece of steel three inches square and a foot long.

Now this deflection will vary in direction according to the points upon which the plate rests. For instance, take two plates, clean them properly, and rest one upon two pieces of wood, one piece under each end, and then place another plate upon the lower one and its face will show hollow, and, if the upper plate is moved backwards and forwards laterally it will be found to move from the ends as centres of motion. Then rest the lower plate upon a piece of wood placed under the middle of its length, and we shall find that (if the plates are reasonably true) the top one will move laterally with the middle of its length as a centre of motion. Now although this method of testing will prove deflection to exist, it will not show its amount, because the top plate deflects to a certain extent, conforming itself to the deflection of the lower one, and if the test is accurately made it will be found that the two plates will contact at whatever points the lower one is supported.

If plates, tested in this manner, show each other to have contact all along however the lower one is supported, it is because they are so light that the upper one will readily bend to suit the deflection of the lower one, and true work is, with such a plate, out of the question.

To obviate these difficulties the body of the plate is heavily ribbed, and these ribs are so arranged as to be of equal lengths, and are made equal in thickness to the plate, so that under varia-

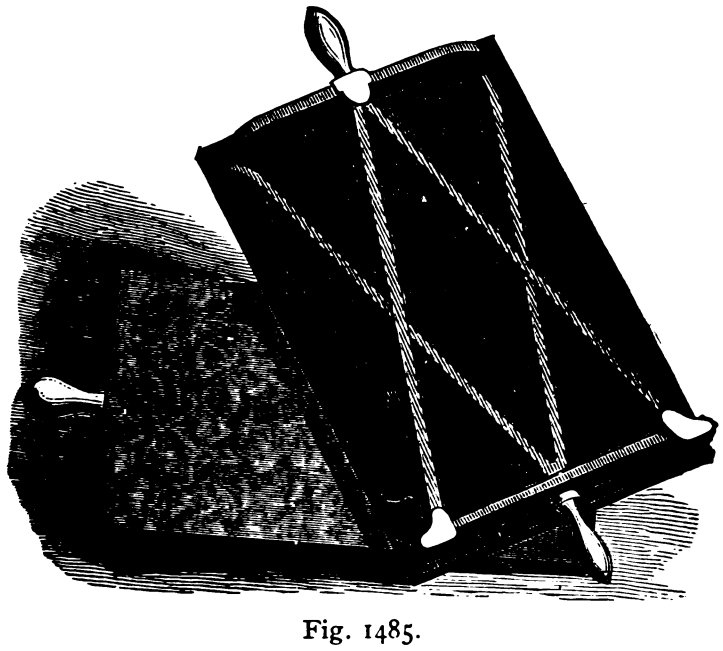

Fig. 1485.

tions of temperature the ribs will not expand or contract more quickly or slowly than the body of the plate, and the twisting that would accompany unequal expansion is avoided.

In Fig. 1484 is shown the form of surface plate designed by Sir Joseph Whitworth for plates to be rested upon their feet. The resting points of the plate are small projections shown at A, B, and C. The object of this arrangement of feet is to enable the plate to rest with as nearly as possible an equal degree of weight upon each foot, the three feet accommodating themselves to an uneven surface. It is obvious, however, that more of the weight will fall upon C than upon A or B, because C supports the whole weight at one end, while at the other end A and B divide the weight.

Fig. 1485 shows the form of plate designed by Professor Sweet.

In Fig. 1486 is shown a pair of angle surface plates resting upon

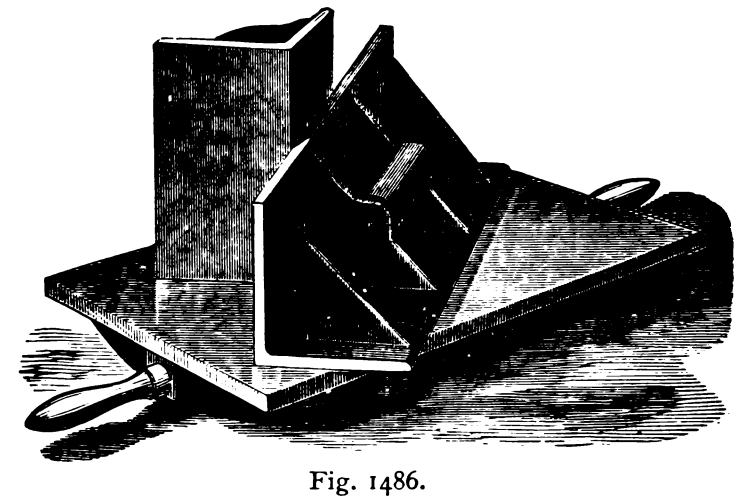

Fig. 1486.

a flat one. The angle plates may be used for a variety of purposes where it is necessary to true a surface standing at a true right angle to another.

The best methods of making surface plates are as follows :—

The edges of the plates should be planed first, care being taken to make them square and flat. The surfaces should then be

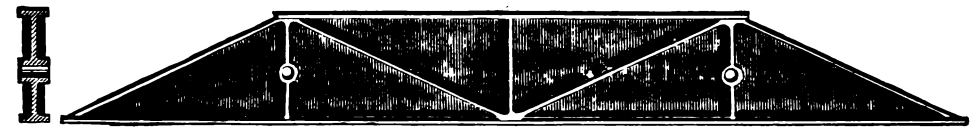

Fig. 1487.

planed, the plates being secured to the planer *by the edges*, which will prevent as far as possible the pressure necessary to hold them against the planing tool cut from springing, warping, or bending the plates. Before the finishing cut is taken, the plates or screws holding the surface plate should be slackened back a little so as to hold them as lightly as may be, the finishing cut being a very light one, and under these circumstances the plates may be planed sufficiently true that one will lift the other from the partial vacuum between them.

After the plates are planed, and before any hand work is done on them, they should be heated to a temperature of at least 200° Fahr., so that any local tension in the casting may be as far as possible removed.

Surface plates for long and narrow surfaces are themselves

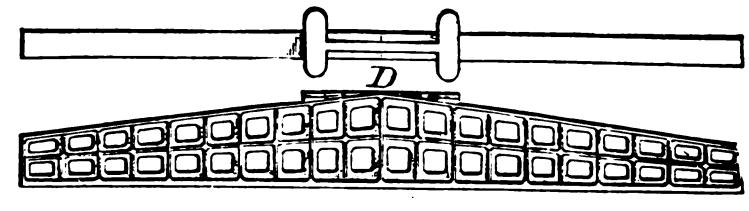

Fig. 1488.

formed long and narrow, as shown in Fig. 1487, which represents the straight-edge surface plate made at Cornell University.

The Whitworth surfacing straight-edge, or long narrow surface plate, is ribbed as in Fig. 1488, so as to give it increased strength in proportion to its weight, and diminish its deflection from its own weight. The lugs D are simply feet to rest it on.

Straight-edges are sometimes made of cast steel and trued on both edges. These will answer well enough for small work, but if made of a length to exceed about four feet their deflection from their own weight seriously affects their reliability. The author made an experiment upon this point with a very rigid surface plate six feet long, and three cast steel straight-edges 6 feet long, $4\frac{1}{2}$ inches wide, and $\frac{1}{2}$ inch thick. Both edges of the straight-edges were trued to the surface plate until the light was excluded from between them, while the bearing surface appeared perfect;

thin tissue paper was placed between the straight-edges and the plate, and on being pulled showed an equal degree of tension. The straight-edges were tried one with the other in the same way and interchanged without any apparent error, but on measuring them it was found that each was about $\frac{1}{80}$ inch wider in the middle of its length than at the ends, the cause being the deflection. They were finished by filing them parallel to calipers, using the bearing marks produced by rubbing them together and also upon

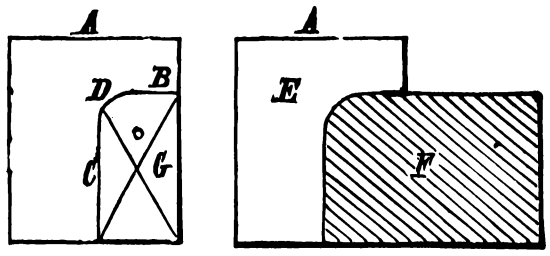

Fig. 1489.

the plate; but, save by the caliper test, the improvement was not discernible.

In rubbing them together no pressure was used, but they were caused to slide under their own weight only.

A separate and distinct class of gauge is used in practice to copy the form of one piece and transfer it to another, so that the one may conform to or fit the other. To accomplish this end, what are termed male and female templates or gauges are employed. These are usually termed templates, but their application to the work is termed gauging it.

Suppose, for example, that a piece is to be fitted to the rounded corner of a piece F, Fig. 1489, and the maker takes a piece of

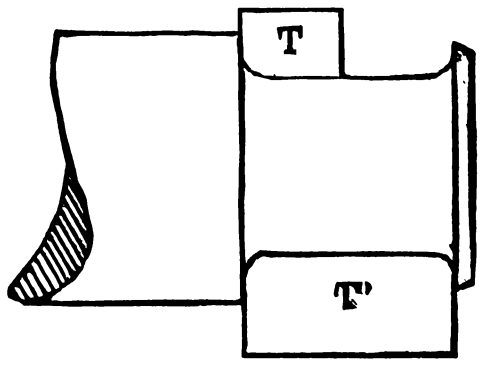

Fig. 1490.

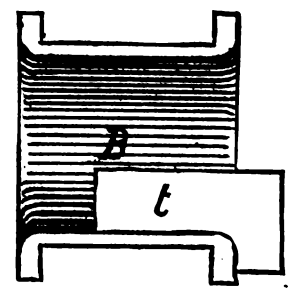

Fig. 1491.

sheet metal A, and cuts it out to the line B C D, leaving a female gauge E, which will fit to the work F. We then make a male gauge G, and apply this to the work, thus gauging the round corner.

Fig. 1490 represents small templates applied to a journal bearing, and it is seen that we may make the template as at T, gauging one corner only, or we may make it as at T', thus gauging the length of the journal as well as the corners.

Fig. 1491 represents a female gauge applied to the corner of a

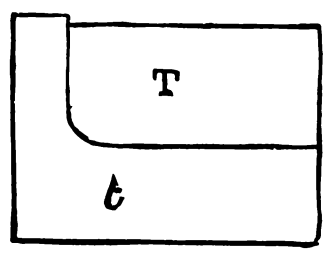

Fig. 1492.

bearing or brass for the above journal, it being obvious that the male and female templates when put together will fit as in Fig. 1492.

For measuring the diameters of metal wire and the thickness of rolled sheet metal, measuring instruments termed wire gauges and sheet metal measuring machines are employed. A simple wire gauge is usually formed of a piece of steel containing numerous notches, whose widths are equal to the intended thickness to be measured in each respective notch. These notches are marked with figures denoting the gauge-number which is represented by the notch.

For wire, however, a gauge having holes instead of notches is sometimes employed, the wire being measured by insertion in the hole, an operation manifestly impracticable in the case of sheet metal.

In Fig. 1493 is shown one of Brown and Sharpe's notch wire-gauges, the notches being arranged round the edge as shown:

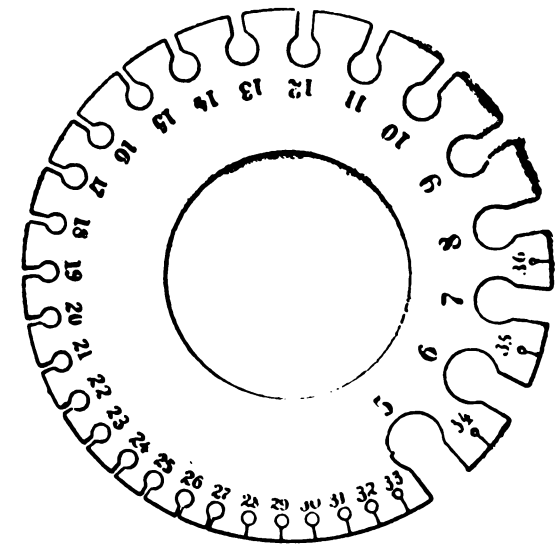

Fig. 1493.

The thickness of a given number of wire-gauge varies according to the system governing the numbering of the gauge, which also varies with the class of metal or wire for which the gauge has been adopted by manufacturers. Thus, in the following table are given the gauge-numbers and their respective sizes in decimal parts of an inch, as determined by Holtzapffel in 1843, and to which sizes the Birmingham wire-gauge is made. The following table gives the numbers and sizes of the Birmingham wire-gauge.

BIRMINGHAM WIRE GAUGE.

Mark.	Size.	Mark.	Size.	Mark.	Size.	Mark.	Size.
36	·004	26	·018	16	·065	6	·203
35	·005	25	·020	15	·072	5	·220
34	·007	24	·022	14	·083	4	·238
33	·008	23	·025	13	·095	3	·259
32	·009	22	·028	12	·109	2	·284
31	·010	21	·032	11	·120	1	·300
30	·012	20	·035	10	·134	0	·340
29	·013	19	·042	9	·148	00	·380
28	·014	18	·049	8	·165	000	·425
27	·016	17	·058	7	·180	0000	·454

In this gauge it will be observed that the progressive wire gauge numbers do not progress by a regular increment.

This gauge is sometimes termed the Stubs wire-gauge, Mr. Stubs being a manufacturer of instruments whose notches are spaced according to the Birmingham wire-gauge. Since, however, Mr. Stubs has also a wire-gauge of his own, whose numbers and gauge-sizes do not correspond to those of the Birmingham gauge, the two Stubs gauges are sometimes confounded. The second Stubs gauge is employed for a special drawn steel wire, made by that gentleman to very accurate gauge measurement for purposes in which accuracy is of primary importance.

From the wear of the drawing dies in which wire is drawn, it is impracticable, however, to attain absolute correctness of gauge measurement. The dies are made to correct gauge when new, and when they have become worn larger, to a certain extent, they are renewed. As a result the average wire is slightly larger than the designated gauge-number. To determine the amount of this error the Morse Twist-Drill and Machine Company measured the wire used by them during an extended period of time, the result being given in table No. 2, in which the first column gives the gauge-number, the second column gives the thickness of the gauge-number in decimal parts of an inch, and the third column the actual size of the wire in decimal parts of an inch as measured by the above Company.

DIAMETER OF STUBS'S DRAWN STEEL WIRE IN FRACTIONAL PARTS OF AN INCH.

No. by Stubs's wire-gauge.	Stubs's Dimensions.	Measurement by Morse Twist-Drill and Machine Co	No. by Stubs's wire-gauge.	Stubs's Dimensions.	Measurement by Morse Twist-Drill and Machine Co.	No. by Stubs's wire-gauge.	Stubs's Dimensions.	Measurement by Morse Twist-Drill and Machine Co.
1	·227	·228	23	·153	·154	45	·081	·082
2	·219	·221	24	·151	·152	46	·079	·080
3	·212	·213	25	·148	·150	47	·077	·079
4	·207	·209	26	·146	·148	48	·075	·076
5	·204	·206	27	·143	·145	49	·072	·073
6	·201	·204	28	·139	·141	50	·069	·070
7	·199	·201	29	·134	·136	51	·066	·067
8	·197	·199	30	·127	·129	52	·063	·064
9	·194	·196	31	·120	·120	53	·058	·060
10	·191	·194	32	·115	·116	54	·055	·054
11	·188	·191	33	·112	·113	55	·050	·052
12	·185	·188	34	·110	·111	56	·045	·047
13	·182	·185	35	·108	·110	57	·042	·044
14	·180	·182	36	·106	·106	58	·041	·042
15	·178	·180	37	·103	·104	59	·040	·041
16	·175	·177	38	·101	·101	60	·039	·040
17	·172	·173	39	·099	·100	61	·038	·039
18	·168	·170	40	·097	·098	62	·037	·038
19	·164	·166	41	·095	·096	63	·036	·037
20	·161	·161	42	·092	·094	64	·035	·036
21	·157	·159	43	·088	·089	65	·033	·035
22	·155	·156	44	·085	·086			

The following table represents the letter sizes of the same wire:—

LETTER SIZES OF WIRE.

A. . .	0·234	J. . .	0·277	S. . .	0·348
B. . .	0·238	K. . .	0·281	T. . .	0·358
C. . .	0·242	L. . .	0·290	U. . .	0·368
D. . .	0·246	M. . .	0·295	V. . .	0·377
E. . .	0·250	N. . .	0·302	W . .	0·386
F. . .	0·257	O. . .	0·316	X. . .	0·397
G. . .	0·261	P. . .	0·323	Y. . .	0·404
H. . .	0·266	Q. . .	0·332	Z. . .	0·413
I. . .	0·272	R. . .	0·339		

By an Order in Council dated August 23rd, 1883, and which took effect on March 1st, 1884, the standard department of the British Board of Trade substituted for the old Birmingham wire-gauge the following:—

Descriptive number B. W. G.	Equivalents in parts of an inch.	Descriptive number B. W. G.	Equivalents in parts of an inch.
No.	Inch.	No.	Inch.
7/0	0·500	23	0·024
6/0	·464	24	·022
5/0	·432	25	·020
4/0	·400	26	·018
3/0	·372	27	·0164
2/0	·348	28	·0148
0	·324	29	·0136
1	·300	30	·0124
2	·276	31	·0116
3	·252	32	·0108
4	·232	33	·0100
5	·212	34	·0092
6	·192	35	·0084
7	·176	36	·0076
8	·160	37	·0068
9	·144	38	·0060
10	·128	39	·0052
11	·116	40	·0048
12	·104	41	·0044
13	·092	42	·0040
14	·080	43	·0036
15	·072	44	·0032
16	·064	45	·0028
17	·056	46	·0024
18	·048	47	·0020
19	·040	48	·0016
20	·036	49	·0012
21	·032	50	·0010
22	·028		

The gauge known as the American Standard Wire-Gauge was designed by Messrs. Brown and Sharpe to correct the discrepancies of the old Birmingham wire-gauge by establishing a regular proportion of the thirty-nine successive steps between the 0000 and 36 gauge-number of that gauge. In the American Standard (which is also called the Brown and Sharpe gauge) the value of 0·46 or $\frac{46}{100}$ has been taken as that for 0000 or the largest dimension of the gauge. Then by successive and uniform decrements, each number following being obtained from multiplying its predecessor by 0·890522 (which is the same thing as deducting 10·9478 per cent.), the final value for number 36 is reached at 0·005, which corresponds with number 35 of the Birmingham wire-gauge. The principle of the gauge is shown in Fig. 1495, which represents a gauge for jewelers, having an angular aperture with the gauge-numbers marked on the edge, the lines and numbers being equidistant.

The advantage of this system is that the instrument is easy to

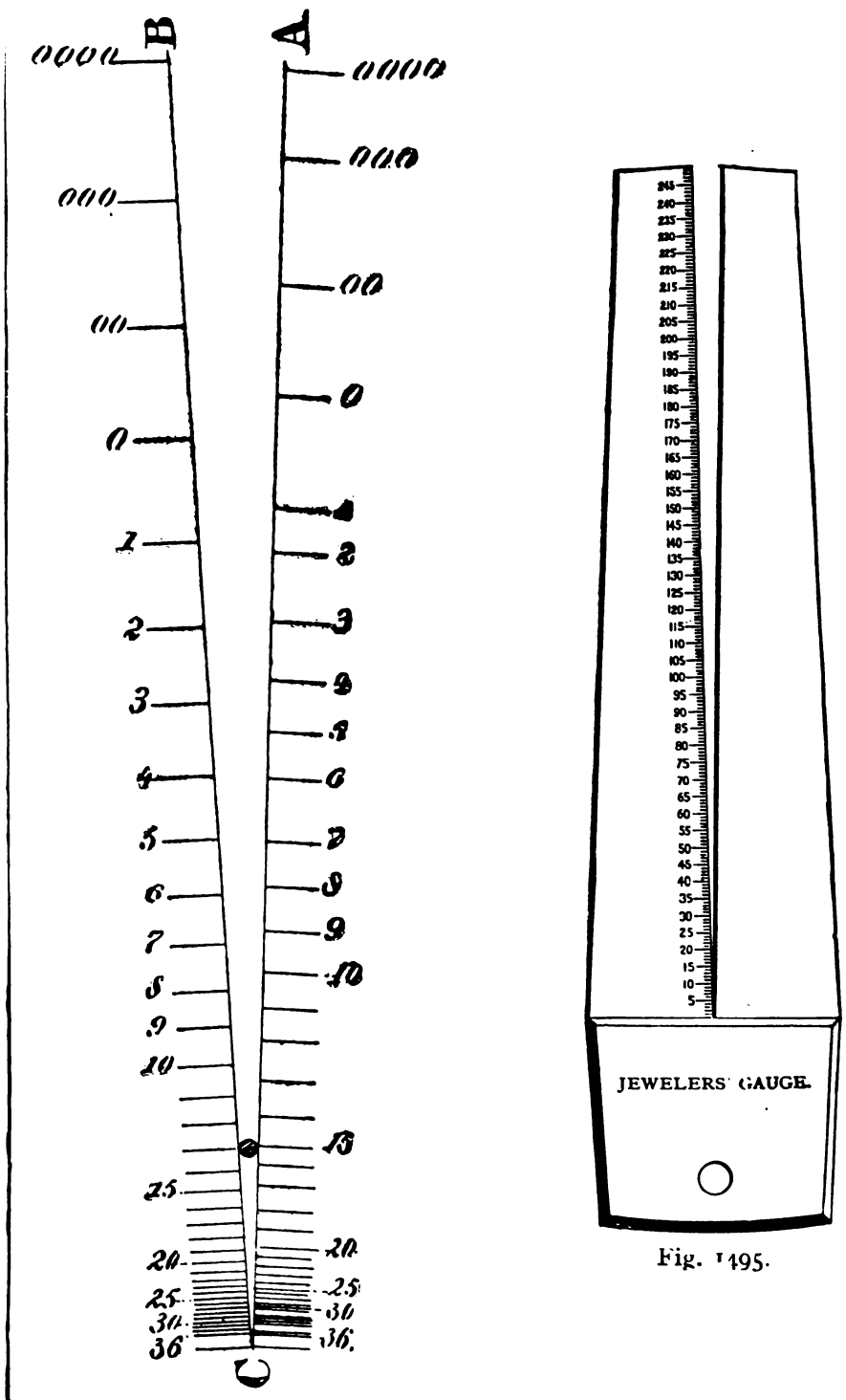

Fig. 1494.

Fig. 1495.

produce, the difference between any two gauge-numbers being easily found by calculation; and the gauge is easy to originate, since the opening, being of the proper width at the open end, the sides terminating at the proper distance and being made straight, the intermediate gauge-sizes may be accurately marked by the necessary number of equidistant lines.

Wire, to be measured by such a gauge, is simply inserted into and passed up the aperture until it meets the sides of the same, which gives the advantage that the size of the wire may be obtained, even though its diameter vary from a gauge-number. This could not be done with a gauge in which each gauge-number and size is given in a separate aperture or notch. A comparison between the Brown and Sharpe and the Birmingham wire-gauge is shown in Fig. 1494, in which a piece of wire is

inserted, showing that No. 15 by the Birmingham gauge is No. 13 by the Brown and Sharpe gauge.

The gauge-numbers and sizes of the same in decimal parts of an inch, of the American standard or Brown and Sharpe gauge, are given in the table following:—

No. of Wire-Gauge.	American or New Standard. Size of each number in decimal parts of an inch.	American or New Standard. Difference between consecutive numbers in decimal parts of an inch.	No. of Wire-Gauge.	American or New Standard. Size of each number in decimal parts of an inch.	American or New Standard. Difference between consecutive numbers in decimal parts of an inch.
0000	·460	——	19	·03589	·00441
000	·40964	·05036	20	·03196	·00393
00	·36480	·04484	21	·02846	·00350
0	·32495	·03994	22	·02535	·00311
1	·28930	·03556	23	·02257	·00278
2	·25763	·03167	24	·0201	·00247
3	·22942	·02821	25	·0179	·00220
4	·20431	·02511	26	·01594	·00196
5	·18194	·02237	27	·01419	·00174
6	·16202	·01992	28	·01264	·00155
7	·14428	·01774	29	·01126	·00138
8	·12849	·01579	30	·01002	·00123
9	·11443	·01406	31	·00893	·00110
10	·10189	·01254	32	·00795	·00098
11	·09074	·01105	33	·00708	·00087
12	·08081	·00993	34	·0063	·00078
13	·07196	·00885	35	.00561	·00069
14	·06408	·00788	36	·005	·00061
15	·05707	·00702	37	·00445	·00055
16	·05082	·00625	38	·00396	·00049
17	·04525	·00556	39	·00353	·00043
18	·0403	·00495	40	·00314	·00039

This gauge is now the standard by which rolled sheet brass and seamless brass tubing is made in the United States. It is also sometimes used as a gauge for the copper wire used for electrical purposes, being termed the American Standard; but unless the words "American Standard" are employed, the above wire is supplied by the Birmingham wire-gauge numbers. The brass wire manufacturers have not yet adopted the Brown and Sharpe gauge; hence, for brass wire the Birmingham gauge is the standard.

Gauges having simple notches are not suitable for measuring accurately the thickness of metal, because the edges of the sheets or plates frequently vary from the thickness of the body of the plate. This may occur from the wear of the rolls employed to roll out the sheet, or because the sheets have been sheared to cut them to the required width, or to remove cracks at the edges, which shearing is apt to form a burr or projection on one side of the edge, and a slight depression on the other.

Again, a gauge formed by a notch requires to slide over the metal of the plate, and friction and a wear causing an enlargement of the notch ensues, which destroys the accuracy of the gauge. To avoid this source of error the form of gauge that was shown in Fig. 1370 may be used, it having the further advantage that it will measure thicknesses intermediate between the sizes of two contiguous notches, thus measuring the actual thickness of the sheet when it is not to any accurate sheet metal gauge thickness.

It is to be observed that in the process of rolling, the sheet is reduced from a greater to a lesser thickness, hence the gauge will not pass upon the plate until the latter is reduced to its proper thickness.

In applying the gauge, therefore, there is great inducement for the workman to force the gauge on to the sheet, in order to ascertain how nearly the sheet is to the required size, and this forcing process causes rapid wear to the gauge.

It follows, therefore, that a gauge should in no case be forced on, but should be applied lightly and easily to the sheet to prevent wear. Here may be mentioned another advantage of the Brown and Sharpe gauge, in that its gauge-number measurements being uniform, it may be more readily known to what extent a given plate varies from its required gauge thickness.

Suppose, for example, a sheet requiring to be of Number 1 Birmingham gauge is above the required thickness, but will pass easily through the 0 notch of the gauge, the excessive variation of those two gauge numbers (over the variations between other consecutive numbers of the gauge) leaves a wider margin in estimating how much the thickness is excessive than would be the case in using the Brown and Sharpe gauge. Indeed, if the edge of the plate be of uniform thickness with the body of the plate, the variation from the required thickness may be readily ascertained by a Brown and Sharpe gauge, by the distance the plate will pass up the aperture beyond the line denoting the 0 gauge number, or by the distance it stands from the 1 on the gauge when passed up the aperture until it meets both sides of the same.

In addition to these standard gauges, some firms in the United States employ a standard of their own; the principal of these are given in comparison with others in the table following.

DIMENSIONS OF SIZES, IN DECIMAL PARTS OF AN INCH.

Number of Wire Gauge.	American or Brown & Sharpe.	Birmingham, or Stubs's.	Washburn & Moen Mfg. Co., Worcester, Ms.	Trenton Iron Co., Trenton, N. J.	G. W. Prentiss, Holyoke, Mass.	Old English, from Brass Manufacturers' List.
000000	—	—	·46	—	—	—
00000	—	—	·43	·45	—	—
0000	·46	·454	·393	·4	—	—
000	·40964	·425	·362	·36	·3586	—
00	·3648	·38	·331	·33	·3282	—
0	·32495	·34	·307	·305	·2994	—
1	·2893	·3	·283	·285	·2777	—
2	·25763	·284	·263	·265	·2591	—
3	·22942	·259	·244	·245	·2401	—
4	·20431	·238	·225	·225	·223	—
5	·18194	·22	·207	·205	·2047	—
6	·16202	·203	·192	·19	·1885	—
7	·14428	·18	·177	·175	·1758	—
8	·12849	·165	·162	·16	·1605	—
9	·11443	·148	·148	·145	·1471	—
10	·10189	·134	·135	·13	·1351	—
11	·090742	·12	·12	·1175	·1205	—
12	·080808	·109	·105	·105	·1065	—
13	·071961	·095	·092	·0925	·0928	—
14	·064084	·083	·08	·08	·0816	·083
15	·057068	·072	·072	·07	·0726	·072
16	·05082	·065	·063	·061	·0627	·065
17	·045257	·058	·054	·0525	·0546	·058
18	·040303	·049	·047	·045	·0478	·049
19	·03539	·042	·041	·039	·0411	·04
20	·031961	·035	·035	·034	·0351	·035
21	·028462	·032	·032	·03	·0321	·0315
22	·025347	·028	·028	·027	·029	·0295
23	·022571	·025	·025	·024	·0261	·027
24	·0201	·022	·023	·0215	·0231	·025
25	·0179	·02	·02	·019	·0212	·023
26	·01594	·018	·018	·018	·0194	·0205
27	·014195	·016	·017	·017	·0182	·01875
28	·012641	·014	·016	·016	·017	·0165
29	·011257	·013	·015	·015	·0163	·0155
30	·010025	·012	·014	·014	·0156	·01375
31	·008928	·01	·0135	·013	·0146	·01225
32	·00795	·009	·013	·012	·0136	·01125
33	·00708	·008	·011	·011	·013	·01025
34	·006304	·007	·01	·01	·0118	·0095
35	·005614	·005	·0095	·009	·0109	·009
36	·005	·004	·009	·008	·01	·0075
37	·004453	—	·0085	·00725	·0095	·0065
38	·003965	—	·008	·0065	·009	·00575

In the Whitworth wire-gauge, the mark or number on the gauge simply denotes the number of $\frac{1}{1000}$ths of an inch the wire is in diameter; thus Number 1 on the gauge is $\frac{1}{1000}$th inch, Number 2 is $\frac{2}{1000}$ths inch in diameter, and so on.

Below is given the Washburn and Moen Manufacturing Company's music wire-gauge.

SIZES OF THE NUMBERS OF STEEL MUSIC WIRE-GAUGE.

No. of Gauge.	Size of each No. in decimal parts of an inch.	No. of Gauge.	Size of each No. in decimal parts of an inch.
12	·0295	21	·0461
13	·0311	22	·0481
14	·0325	23	·0506
15	·0343	24	·0547
16	·0359	25	·0585
17	·0378	26	·0626
18	·0395	27	·0663
19	·0414	28	·0719
20	·043	—	—

These sizes are those used by the Washburn and Moen Manufacturing Company, of Worcester, Mass., manufacturers of steel music wire.

In the following table is the French Limoges wire-gauge.

Number on gauge.	Diameter, millimètre.	Inch.	Number on gauge.	Diameter, millimètre.	Inch.
0	·39	·0154	13	1·91	·0725
1	·45	·0177	14	2·02	·0795
2	·56	·0221	15	2·14	·0843
3	·67	·0264	16	2·25	·0886
4	·79	·0311	17	2·84	·112
5	·90	·0354	18	3·40	·134
6	1·01	·0398	19	3·95	·156
7	1·12	·0441	20	4·50	·177
8	1·24	·0488	21	5·10	·201
9	1·35	·0532	22	5·65	·222
10	1·46	·0575	23	6·20	·244
11	1·68	·0661	24	6·80	·268
12	1·80	·0706			

The following table gives the Birmingham wire-gauge for rolled sheet silver and gold.

Gauge number.	Thickness.	Gauge number.	Thickness.
	Inch.		Inch.
1	·004	19	·064
2	·005	20	·067
3	·008	21	·072
4	·010	22	·074
5	·013	23	·077
6	·013	24	·082
7	·015	25	·095
8	·016	26	·103
9	·019	27	·113
10	·024	28	·120
11	·029	29	·124
12	·034	30	·126
13	·036	31	·133
14	·041	32	·143
15	·047	33	·145
16	·051	34	·148
17	·057	35	·158
18	·061	36	·167

The following table gives the gauge thickness of Russia sheet iron,* the corresponding numbers by Birmingham wire gauge, and the thicknesses in decimal parts of an inch.

Russia gauge number.	Birmingham wire-gauge number.	Thickness in decimal parts of an inch.
7	29	·013
8	28	·014
9	27	·016
10	26	·018
11	25	·020
12	24½	·021
13	24	·022
14	23½	—
15	22⅝	—
16	21½	—

The following table gives the gauge numbers to which galvanized iron is made.†

Gauge number.	Thickness.	Gauge number.	Thickness.
	Inch.		Inch.
14	·083	23	·025
16	·065	24	·022
17	·058	25	·02
18	·049	26	·018
19	·042	27	.016
20	·035	28	·014
21	·032	29	·013
22	·028		

In the following table is given the American gauge sizes and their respective thicknesses for sheet zinc.

* This iron comes in sheets 28 × 56 inches = 10·88 square feet of area.
† Galvanized iron is made to the Birmingham wire-gauge, the thickness includes the galvanizing, the sheets being rolled thinner to allow for it.

Gauge and Thickness.			Gauge and Thickness.		
Number.	Approximate Birmingham wire-gauge.	Thickness in fractions of an inch.	Number.	Approximate Birmingham wire-gauge.	Thickness in fractions of an inch.
1	—	0·0039	16	—	0·0447
5	—	0·0113	17	—	0·0521
6	—	0·0132	18	—	0·0596
7	—	0·0150	19	—	0·0670
8	28	0·0169	20	—	0·0744
9	27	0·0187	21	—	0·0818
10	26	0·0224	22	—	0·0892
11	25	0·0261	23	—	0·0966
12	24	0·0298	24	—	0·1040
13	—	0·0336	25	—	0·1114
14	—	0·0373	26	—	0·1189
15	—	0·0410			

The Belgian sheet zinc gauge is as follows:

Gauge number.	Thickness in decimal parts of an inch.	Gauge number.	Thickness in decimal parts of an inch.
1	·004	14	·037
2	·006	15	·041
3	·008	16	·045
4	·009	17	·052
5	·011	18	·059
6	·013	19	·067
7	·015	20	·074
8	·017	21	·082
9	·019	22	·089
10	·022	23	·097
11	·026	24	·104
12	·030	25	·111
13	·034	26	·120

The gauge sizes of the bores of rifles are given in the following table,* in which the first column gives the proper gauge diameter of bore, and the second the actual diameter containing the errors found to exist from errors of workmanship. The standard diameters are supposed to be based upon the number of spherical bullets to the pound weight, if of the same diameter as the respective gauge sizes.

No. of Gauge.	Diameter of Bore.	No. of Gauge.	Diameter of Bore.
4	varies from 1·052 to 1·000	14	varies from ·693 to ·680
6	,, ·919 ,, ·900	16	,, ·662 ,, ·650
8	,, ·835 ,, ·820	20	,, ·615 ,, ·610
10	,, ·775 ,, ·760	24	,, ·579 ,, ·577
12	,, ·729 ,, ·750	28	,, ·550 ,, ·548

The following table gives the result of some recent experiments made by Mr. David Kirkaldy, of London, to ascertain the tensile strength and resistance to torsion of wire made of various materials:

Kind of wire tested.	Pulling stress per sq. in.	
	Unannealed.	Annealed.
	Pounds.	Pounds.
Copper	63,122	37,002
Brass	81,156	51,550
Charcoal iron	65,834	46,160
Coke iron	64,321	61,294
Steel	120,976	74,637
Phosphor bronze, No. 1 . .	159,515	58,853
,, No. 2 . .	151,119	64,569
,, No. 3 . .	139,141	54,111
,, No. 4 . .	120,900	53,381

Kind of wire tested.	Ultimate extension in per cent. Annealed.	No. of twists in 5 inches.	
		Unannealed.	Annealed.
Copper	34·1	86·8	96
Brass	36·5	14·7	57
Charcoal iron	28	48	87
Coke iron	17	26	44
Steel	10·9	†	79
Phosphor bronze, No. 1 . .	46·6	13·3	66
,, No. 2 . .	42·8	15·8	60
,, No. 3 . .	44·9	17·3	53
,, No. 4 . .	42·4	13	124

* From *The English Mechanic.*
† Of the eight pieces of steel tested, three stood from forty to forty-five twists, and five stood one and a half to four twists.

The following, on some experiments upon the elasticity of wires, is from the report of a committee read before the British Association at Sheffield, England.

"The most important of these experiments form a series that have been made on the elastic properties of very soft iron wire. The wire used was drawn for the purpose, and is extremely soft and very uniform. It is about No. 20 B.W.G., and its breaking weight, tested in the ordinary way, is about 45 lbs. This wire has been hung up in lengths of about 20 ft., and broken by weights applied, the breaking being performed more or less slowly.

"In the first place some experiments have been tried as to the smallest weight which, applied very cautiously and with precautions against letting the weight run down with sensible velocity, will break the wire. These experiments have not yet been very satisfactorily carried out, but it is intended to complete them.

"The other experiments have been carried out in the following way: It was found that a weight of 28 lbs. does not give permanent elongation to the wire taken as it was supplied by the wire drawer. Each length of the wire, therefore, as soon as it was hung up for experiment, was weighted with 28 lbs., and this weight was left hanging on the wire for 24 hours. Weights were then added till the wire broke, measurements as to elongation being taken at the same time. A large number of wires were broken with equal additions of weight, a pound at a time, at intervals of from three to five minutes—care being taken in all cases, however, not to add fresh weight if the wire could be seen to be running down under the effect of the weight last added. Some were broken with weights added at the rate of 1 lb. per day, some with ¾ lb. per day, and some with ½ lb. per day. One experiment was commenced in which it was intended to break the wire at a very much slower rate than any of these. It was carried on for some months, but the wire unfortunately rusted, and broke at a place which was seen to be very much eaten away by rust, and with a very low breaking weight. A fresh wire has been suspended, and is now being tested. It has been painted with oil, and has now been under experiment for several months.

"The following tables will show the general results of these experiments. It will be seen, in the first place, that the prolonged application of stress has a very remarkable effect in increasing the strength of soft iron wire. Comparing the breaking weights for the wire quickly broken with those for the same wire slowly broken, it will be seen that in the latter case the strength of the wire is from two to ten per cent. higher than in the former, and is on the average about five or six per cent. higher. The result as to elongation is even more remarkable, and was certainly more unexpected. It will be seen from the tables that, in the case of the wire quickly drawn out, the elongation is on the average more than three times as great as in the case of the wire drawn out slowly. There are two wires for which the breaking weights and elongations are given in the tables, both of them 'bright' wires, which showed this difference very remarkably. They broke without showing any special peculiarity as to breaking weight, and without known difference as to treatment, except in the time during which the application of the breaking weight was made. One of them broke with 44¼ lbs., the experiment lasting one hour and a half; the other with 47 lbs., the time occupied in applying the weight being 39 days. The former was drawn out by 28·5 per cent. on its original length, the latter by only 4.79 per cent.

"It is found during the breaking of these wires that the wire becomes alternately more yielding and less yielding to stress applied. Thus from weights applied gradually between 28 lbs. and 31 lbs. or 32 lbs., there is very little yielding, and very little elongation of the wire. For equal additions of weight between 33 lbs. and about 37 lbs. the elongation is very great. After 37 lbs. have been put on, the wire seems to get stiff again, till a weight of about 40 lbs. has been applied. Then there is a rapid running down till 45 lbs. has been reached. The wire then becomes stiff again, and often remains so till it breaks. It is evident that this subject requires careful investigation."

TABLES SHOWING THE BREAKING OF SOFT IRON WIRES AT DIFFERENT SPEEDS.

I.—WIRE QUICKLY BROKEN.

Rate of adding weight.	Breaking weight in pounds.	Per cent. of elongation on original length.
*Dark Wire.**		
½ lb. per minute	45	25·4
1 " 5 minutes	45¼	25·9
" 5 "	45¼	24·9
" 4 "	44¼	24·58
" 3 "	44¼	24·88
" 3 "	45¼	29·58
" 5 "	44¼	27·78
*Bright Wire.**		
1 lb. per 5 minutes	44¼	28·5
" 5 "	44¼	27·0
" 4 "	44¼	27·1

II.—WIRE SLOWLY BROKEN.

Weight added and number of experiment.	Breaking weight in pounds.	Per cent. of elongation on original length.
1. 1 lb. per day	48	7·58
2. " "	46	8·13
3. " "	47	7·05
4. " "	47	6·51
5. " "	47	8·62
6. " "	47	5·17
7. " "	46	5·50
8. " "	47	6·92 bright wire
1. ¾ lb. per day	49	8·50
2. " "	48¼	8·81
3. " "	Broken by accident.	
4. " "	46	7·55
5. " "	46	6·41
6. " "	45½	6·62
1. ½ lb. per day	48	8·26
2. " "	50	8·42
3. " "	49	7·18
4. " "	47	4·79 } bright wires
5. " "	46½	6·00 }

The American Standard diameters of solid drawn or reamless brass and copper tube are as in the following table.

Outside diameter.	Thickness Stubs's wire-gauge.	Weight per running foot. Brass tubes.	Weight per running foot. Copper tubes.
5/8	18	3/8	3/8
3/4	17	1/2	1/2
13/16	17	9/16	9/16
7/8	17	5/8	5/8
15/16	16	11/16	11/16
1	16	3/4	3/4
1⅛	16	7/8	7/8
1¼	12 and 14	1¼	1¼
1⅜	12 " 14	1⅜	1⅜
1½	12 " 14	1½	1 6/10
1⅝	12 " 14	1⅝	1 7/10
1¾	12 " 14	1¾	1 8/10
1 13/16	12 " 14	1 13/16	1 9/10
1⅞	12 " 14	1⅞	1 15/16
1 15/16	12 " 14	2	2 1/10
2	12 " 14	2⅛	2¼
2⅛	12 " 14	2¼	2⅜
2¼	12 " 14	2⅜	2½
2⅜	12 " 14	2½	2⅝
2½	11 " 13	2¾	3
2⅝	11 " 13	3	3⅛
2¾	11 " 13	3⅛	3¼
2⅞	11 " 13	3¼	3⅜
3	11 " 13	3⅓	3½
3⅛	11 " 13	3½	3¾
3¼	11 " 13	3⅝	4⅛
3⅜	11 " 13	4⅛	4¼
3½	11 " 13	4¼	4⅜
4	11 " 13	5	5¼
4¼	11 " 13	6	6½
5	10 " 12	7	8
6	10 " 12	9	10

* The wire used was all of the same quality and gauge, but the "dark" and "bright" wire had gone through slightly different processes for the purpose of annealing.

CHAPTER XVI.—SHAPING AND PLANING MACHINES.—SHAPING MACHINES.

SHAPING machines, or shapers, as they are sometimes called, may be divided into three classes, viz.: First, those in which the work table is moved to feed the work to the cut; Second, those in which the bar or ram carrying the tool is guided in a carriage or saddle that is fed to the cut; and, Third, those in which the ram is given a quick return motion by means of belts.

The first are usually small machines for light work.

The second are usually for heavy work, and generally have two work tables.

The third are used upon both light and heavy work.

When the return motion of the ram of a shaping machine is governed by a positive mechanical motion, it is obviously more positive in its motion than it is when governed by a belt.

On the other hand, however, a quicker return motion can be given by a belt motion than can be given by a positive mechanical motion.

The office of the shaping machine is to dress or cut to shape such surfaces as can be most conveniently cut by a tool moving across the work in a straight line.

The position occupied among machine tools at the present time by shaping and planing machines is not as important as was the case a few years ago, because of the advent of the milling machine, which requires less skill to operate, and produces superior work.

All the cutting tools used upon shaping and planing machines have already been described with reference to outside tools for lathe work, and it may be remarked that a great deal of the chucking done on the shaping and planing machine corresponds to face plate chucking in the lathe. Both shaping machines, and small planing machines, however, are provided with special chucks and work-holding appliances that are not used in lathe work, and these will be treated of presently. On large planing machines chucks are rarely used, on account of the work being too large to be held in a chuck. Such chucks, however, or rather special chucking devices are, however, coming into use on the larger sizes of planing machines.

The simplest form of shaping machine, or shaper, as it is usually termed in the United States, is that in which a tool-carrying slide is reciprocated across the work, the latter moving at the end of each back stroke, so that on the next forward stroke the tool may be fed to its cut on the work. Fig. 1496 (Plate LXIX.) represents a shaper of this class.

P is the belt pulley driving a shaft, at the other end of which is the pinion *p* driving the gear wheel Q, whose shaft has journal bearing in the piece R of the frame. On the shaft of Q and on the other side of R is a Whitworth quick return motion (see page 400 for an analysis of this motion), driving the rod S which reciprocates the ram or bar A, on the end of which is the cutting tool T, the work being held between the vise jaws *v v*, which is secured to the work table or platen W. K is a slotted piece for the driving-pin and its die which is adjustable along the slot to vary the amount of motion of the feed rod N, which operates the bell crank C, at whose other end is the pawl D for operating the gear M which drives a pinion of the feed screw, the wheel H being to operate the feed screw by hand. It is obvious that the farther the pin *a* is set away from the centre of motion of its driving place K, the greater the amount of motion given to N, C, and D, and the coarser the amount of tool feed.

This form of shaper is termed a pillar on account of the form of its frame.

Fig. 2 (Plate LXIX.) represents Gould & Eberhardt's Patent Quick Return Shaping Machine, in which the stroke of the ram can be changed and adjusted while the machine is running, which is a great convenience.

The work vise may be set in three positions at right angles to

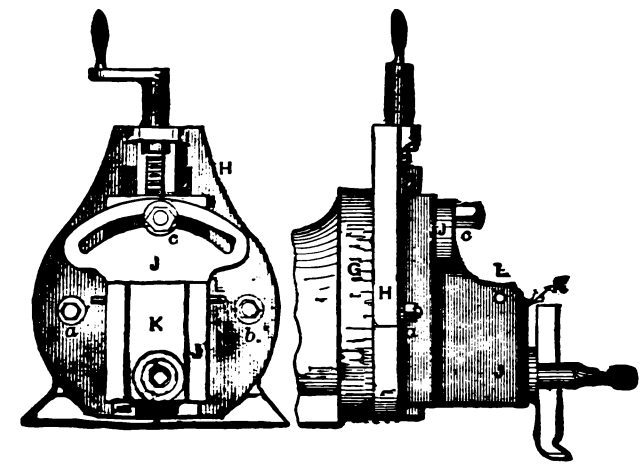

Fig. 1497.

each other, and is set true in each by a taper pin. It can also be fastened to the side of the angle-plate for heavy work.

The construction of the heads of shaping machines varies somewhat, an example being given in Fig. 1497, in which G is the end of the slide or ram A to which the swivel-head H is bolted by the bolts *a b*. The heads of these bolts pass into T-shaped annular grooves.

Referring again to the mechanism for carrying the cutting tool and actuating it to regulate the depth of cut in Fig. 1497, G is the end of the slide A to which the swivel head H is bolted by the bolts *a b*. The heads of these bolts pass into T-shaped annular

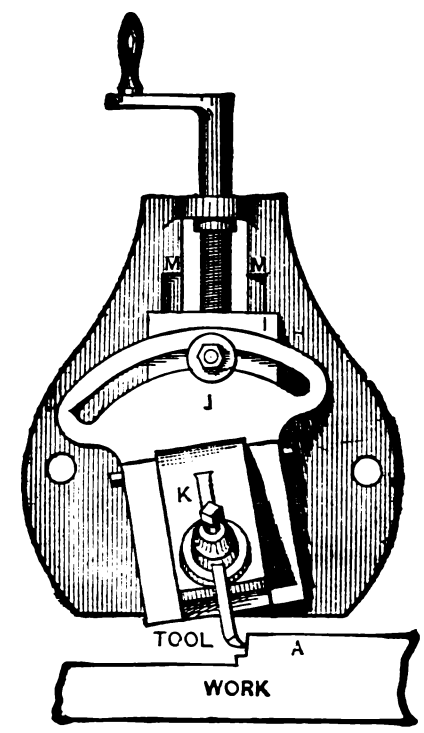

Fig. 1498.

grooves in G, so that H may be set to have its slides at any required angle. I is a slider actuated on the slide by means of the vertical feed screw which has journal bearing in the top of H, and passes through a nut provided in I. To I is fastened the apron swivel J, being held by a central bolt not seen in the cut,

and also by the bolt at *c*. In J is a slot, which when *c* is loosened permits J to be swung at an angle. The apron K is pivoted by a taper pin L, which fits into both J and K. During the cutting stroke the apron K beds down upon J, but during the back stroke the tool may lift the apron K swinging upon the pivot L. This prevents the cutting edge of the tool from rubbing against the work during the return stroke.

Thus in Fig. 1498 is a piece of work, and it is supposed that a cut is being carried down the vertical face or shoulder at A; by setting the apron swivel at an angle and lifting the tool during

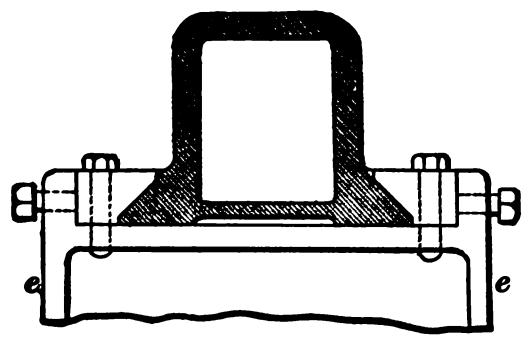

Fig. 1499.

the return stroke, its end will move away from the face of the shoulder. The slider I obviously moves in a vertical line upon slides M.

To take up the wear of the sliding bar A, various forms of guideways and guides are employed, a common form being shown in Fig. 1499. There are two gibs, one on each side of the bar, and these gibs are set up by screws to adjust the fit. In some cases only one gib is used, and in that event the wear causes the slide to move to one side, but as the wear proceeds exceedingly slowly in consequence of the long bearing surface of the bar in its guides, this is of but little practical moment. On the other hand, when two gibs are used great care must be taken to so adjust the screws that the slide bar is maintained in a line at a right angle to the jaws of the work-holding vice, so that the tool will cut the vertical surfaces or side faces of the work at a right angle to the work surface that is gripped by the vice.

To enable the length of stroke of slide A, Fig. 1496, to be varied to suit the length of the work, and thus not lose time by uselessly tra-

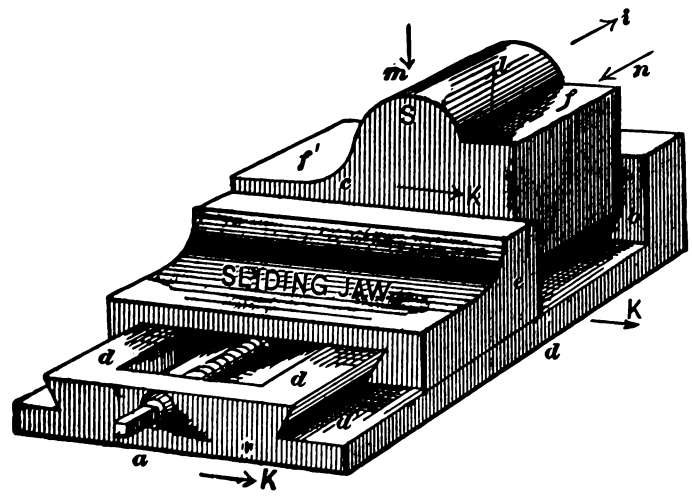

Fig. 1500.

versing that slide, E is provided with a T-slot as before stated, and the distance of the wrist pin (in this slot) from the centre of wheel E determines the amount of motion imparted to the connecting rod, and therefore to slide A. The wrist pin is set so as to give to A a rather longer stroke than the work requires, so that this tool may pass clear of the work on the forward stroke, and an inch or so past the work on the return stroke, the latter giving time to feed the tool down before it meets the work.

The length of the stroke being set, the crank piece E (for its slot and wrist pin correspond to a crank) is, by pulling round the pulley P, brought to the end of a stroke, the connecting rod being in line with slide A. The nut D is then loosened and slide A may then be moved by hand in its slideway until the tool clears the work at the end corresponding to the connecting rod position when nut D is tightened and the stroke is set.

Now suppose it is required to shape or surface the faces *f* and *f'*, the round curve S and the hollow curve *c* of the piece of work shown held in a vice chuck in Fig. 1500, and during the cutting stroke the slide *a* will travel in the direction of *n* in the figure, while during its return stroke it will traverse back in the direction of *i*. The sliding table W in Fig. 1496 would continuously but gradually be fed or moved (so much per tool traverse, and by the feeding mechanism described with reference to Fig. 1501) carrying with it the vice chuck, and therefore the work. When this feeding brought the surface of curve S, Fig. 1500, into contact with the tool, the feed screw handle in figure would be operated by hand so much per feed traverse, thus raising the slider, and therefore the tool, in the direction of *l*, and motion of the work to the right and the left of the tool (by means of the feed handle) would (if the amount of tool lift per tool stroke is properly proportioned to the amount of work feed to the right) cause the tool to cut the work to the required curvature. When the work had traversed until the tool had arrived at the top of curve S, the direction of motion of the feed-screw handle Z in Fig. 1496 must be reversed, the tool being fed down so much per tool traverse (in the direction of *m*) so as to cut out the curves from the top of S to the bottom of *c*, the face *f* being shaped by the automatic feed motion only.

The feed obviously occurs once for each cutting stroke of the tool and for the vertical motion of the tool, or when the tool is operated by the hand feed-screw handle in Fig. 1496, the handle motion, and therefore the feed should occur at the end of the back stroke and before the tool again meets the work, so as to prevent the cutting edge of the tool from scraping against the work during its back traverse.

In this connection it may be remarked that by setting the apron swivel over, as in Fig. 1498, the tool is relieved from rubbing on the back stroke for two reasons, the first having been already explained, and the second being that to whatever amount the tool may spring, bend, or deflect during the cutting stroke (from the pressure of the cut), it will dip into the work surface and cut deeper; hence on the back stroke it will naturally clear the surface, providing that the next cut is not put on until the tool has passed back and is clear of the work.

Referring now to the automatic feed of the sliding table W, in Fig. 1496, the principle of its construction may be explained with reference to Fig. 1501, which may be taken to represent a class of such feeding mechanisms. A is a wheel corresponding to the wheel marked M in Fig. 1496, or, it may be an independent

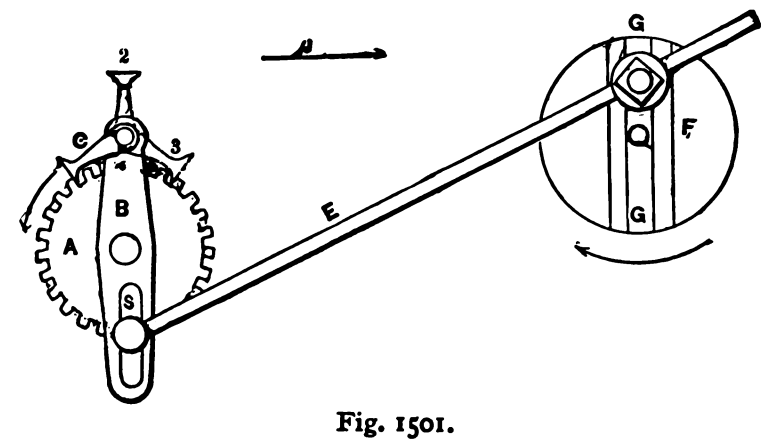

Fig. 1501.

wheel in gear with the feed wheel. On the same shaft as A is pivoted an arm B having a slot S at one end to receive a pin to which the feed rod E may connect. F is a disk rotated from the driving mechanism of the shaping machine, and having a T-shaped slot G G, in which is secured a pin to actuate the rod E. As F rotates E is vibrated to and fro and the catch C on one stroke falls into the notches or teeth in A and causes it to partly rotate, while on the return stroke of E it lifts over the teeth, leaving A stationary.

The amount of motion of B, and therefore the quantity of the feed, may be regulated at either end of E; as, for example, the farther the pin from the centre of G the longer the stroke of E, or

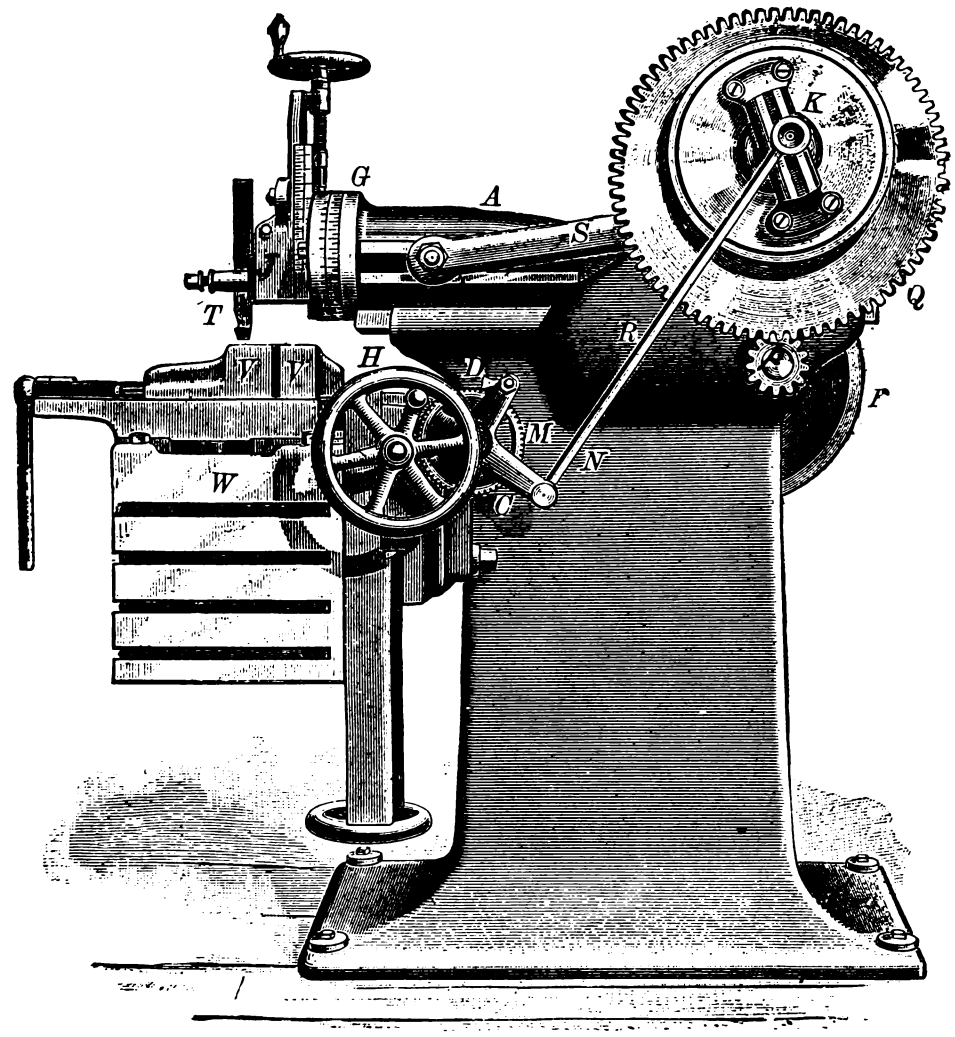

Fig. 1496.

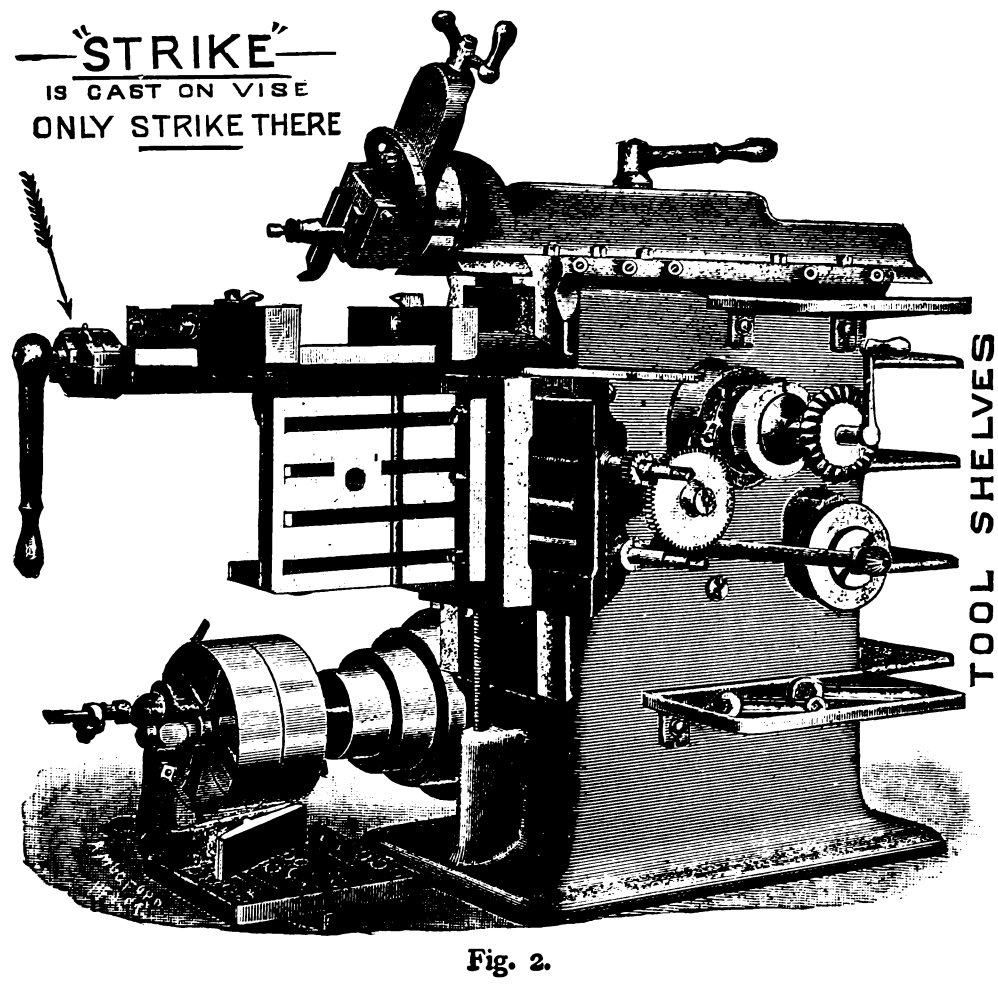

Fig. 2.

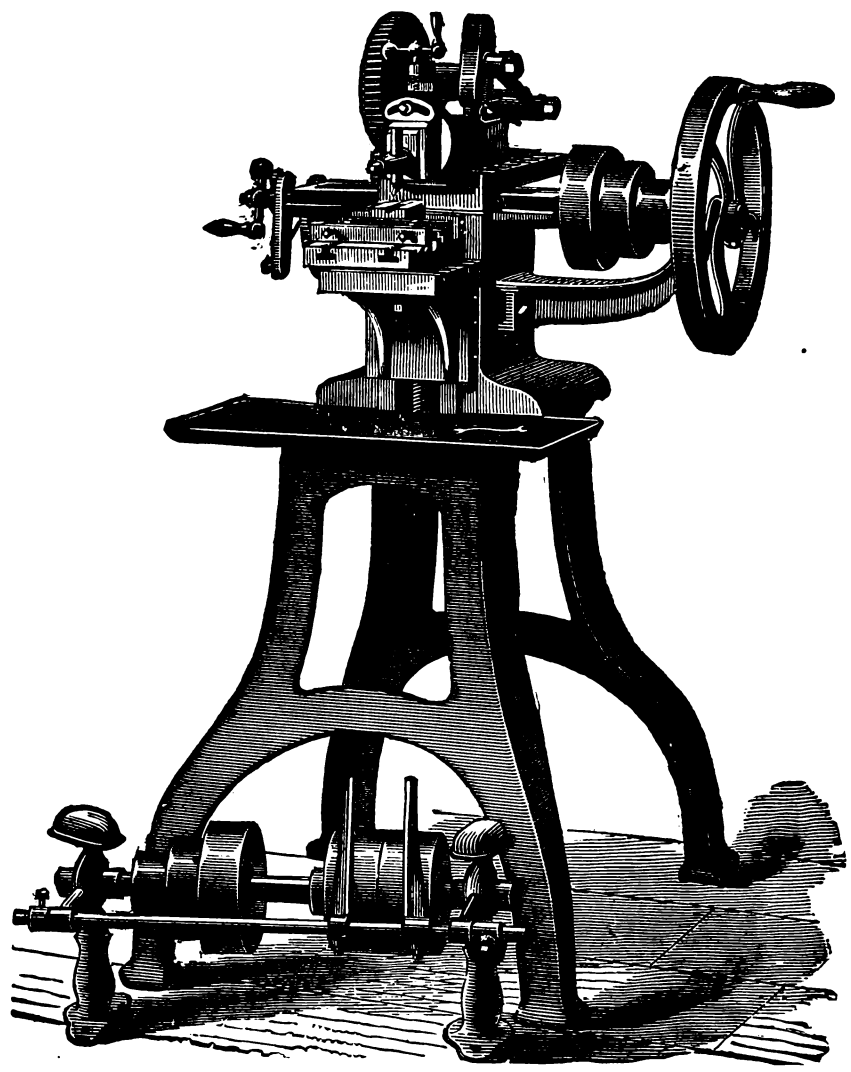

Fig. 1505.

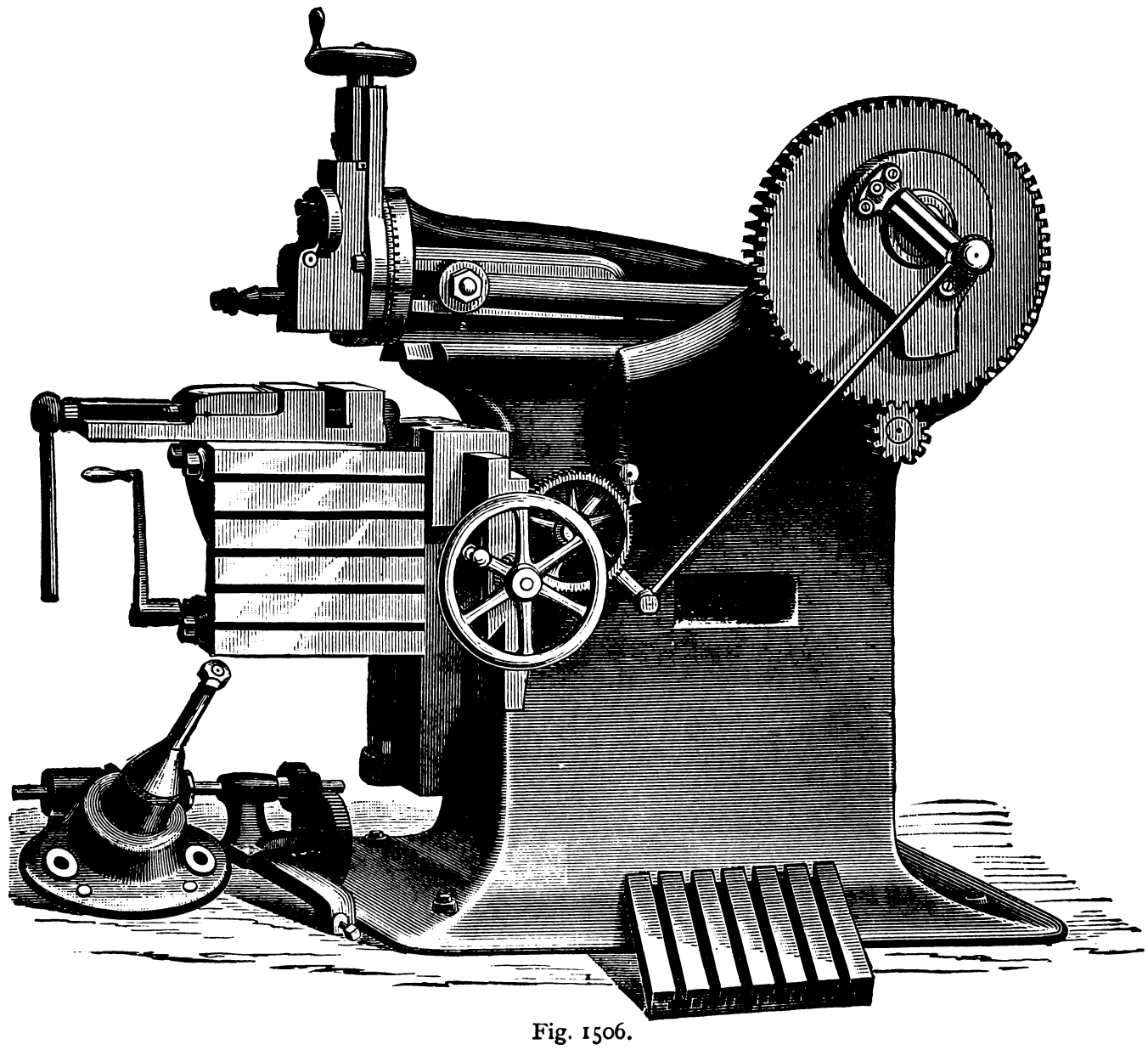

Fig. 1506.

the nearer the pin in S is to the centre of B the longer the stroke, but usually this provision is made at one end only of E.

To stop the feed motion from actuating, the catch C may be lifted to stand vertically, as shown in dotted lines in position 2, and to actuate the feed traverse in an opposite direction, C may be swung over so as to occupy the position marked 3, and to prevent it moving out of either position in which it may be set a small spring is usually employed.

Now suppose that the tool-carrying slide A, Fig. 1496, is traversing forward and the tool will be moving across the work on the cutting stroke, as denoted by the arrow *k* in Fig. 1502, the line of tool motion for that stroke being as denoted by the line *c a*. At *a* is the point where the tool will begin its return stroke, and if the work is moved by the feeding mechanism in the direction of arrow *e*, then the line of motion during the return stroke

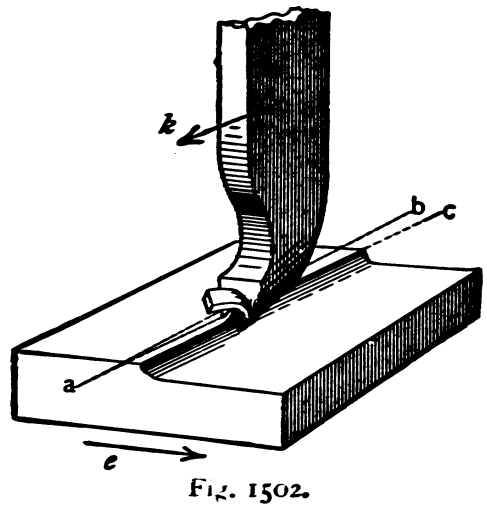

Fig. 1502.

will be in the direction of the dotted line *a b*, and as a result the tool will rub against the side of the cut.

It is to obviate the friction this would cause to the tool edge, and the dulling thereto that would ensue, that the pivot pin L for the apron is employed as shown in Fig. 1497, this pin permitting the apron to lift and causing the tool to bear against the cut with only such force as the weight of the apron and of the tool may cause. Now suppose that in Fig. 1503 we have a piece of work whose edge A A stands parallel to the line of forward tool motion, there being no feed either to the tool or the work, and if the tool be set to the corner *f* its line of motion during a stroke will be represented by the line *f g*. Suppose that on the next stroke the feed motion is put into action and that feeding takes place during the forward stroke, and the amount of the feed per stroke being the distance from *g* to *h*, then the dotted line from *f* to *h* repre-

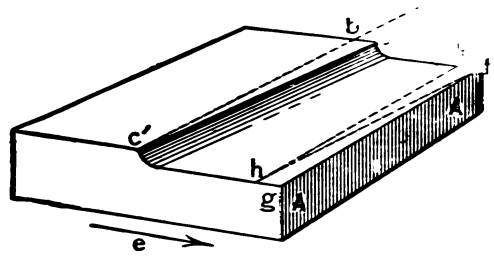

Fig. 1503.

sents the line of cut. On the return stroke the line of tool motion will be from *h* along the dotted line *h k*, and the tool will rest against the cut as before. Suppose again that the feed is put on during the return stroke, and that *c c'* represents the line of tool motion during a cutting stroke, and the return stroke will then be along the line from *c'* to *b*, from *c* to *b* representing the amount of feed per stroke; hence, it is made apparent that the tool will rub against the cut whether the feed is put on during the cutting or during the return stroke. Obviously then it would be preferable to feed the work between the period that occurs after the tool has left the work surface on the return stroke and before it meets it again on the next cutting stroke. It is to be observed, however, that by placing the pin actuating the rod E, Fig. 1501, on the other side of the centre of the slot G in F, the motion of E will be reversed with relation to the motion J of the slide; hence, with the work feeding in either direction, the feed may be made to occur during either the cutting or return stroke at will by locating the driving pin on the requisite side of the centre of G.

An arrangement by Professor Sweet, whereby the feed may be actuated during the cutting or return stroke (as may be determined in designing the machine), no matter in which direction the work table is being fed, is shown in Fig. 1504. Here there

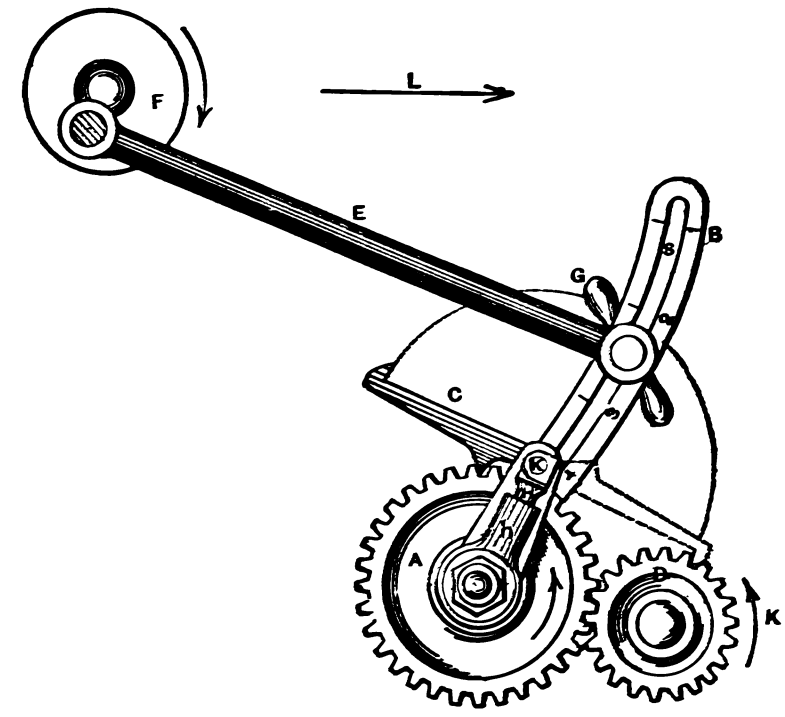

Fig. 1504.

are two gears A and D, and the pawl or catch C may be moved on its pivoted end so as to engage either with A or D to feed in the required direction.

Suppose the slide to be on its return stroke in the direction of L, and F be rotated as denoted by the arrow, then the pawl C will be actuating wheel A as denoted by its arrow, but if C be moved over so as to engage D as denoted by the dotted outline, then with the slide moving in the same direction, C will pull D in the direction of arrow K', and wheel A will be actuated in the opposite direction, thus reversing the direction of the feed while still causing it to actuate on the return stroke.

Since the feed wheel A must be in a fixed position with relation to the work table feed screw, and since the height of this table varies to meet the work, it is obvious that as the work table is raised the distance between the centres of A and F in the figure is lessened, or conversely as that table is lowered the distance between those centres is increased; hence, where the work table has much capacity of adjustment for height, means must be provided to adjust the length of rod E to suit the conditions. This may be accomplished by so arranging the construction that the rod may pass through its connection with wheel F, in the figure, or to pass through its connection with B.

Fig. 1505 represents a shaper that may be driven either by hand or by belt power. The cone pulley shaft has a pinion that drives the gear-wheel shown, and at the other end of this gear-wheel shaft is a slotted crank carrying a pin that drives a connecting rod that actuates the sliding bar, or ram, as it is sometimes termed. The fly-wheel also affords ready means of moving the ram to any required position when setting the tool or the work.

Fig. 1506 represents a shaping machine by the Hewes and Phillips Iron Works, of Newark, N.J. The slide or ram is operated by the Whitworth quick return motion, whose construction will be shown hereafter. The vice sets upon a knee or angle plate fitting to vertical slideways on the cross slide, and may be raised or lowered thereon to suit the height of the work by means of the crank handle shown in front. The vice may be removed and replaced by the supplemental table shown at the foot of the machine. Both the vice and the supplemental table are capable of being swivelled when in position on the machine. The machine is provided with a device for planing circular work, such as

sectors, cranks, etc., the cone mandrel shown at the foot of the machine bolting up in place of the angle plate.

HOLDING WORK IN THE SHAPER, PLANER VICE, OR CHUCK.—The simplest method of holding work in a shaper is by means of a shaper vice, which may be employed to hold almost any shape of work whose size is within the capacity of the chuck. Before describing, however, the various forms of shaper vices, it may be well to discuss points to be considered in its use.

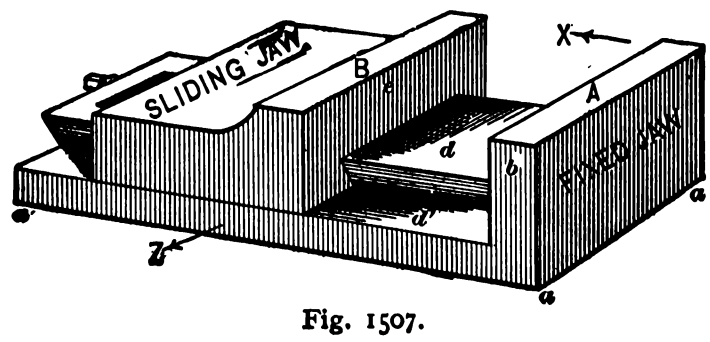

Fig. 1507.

The bottom surface *a a*, Fig. 1507, of a planer vice is parallel with the surfaces *d*, *d'*, and as surface *a* is secured to the upper face of the slider table shown in figure, and this face is parallel to the line of motion of the slide A, and also parallel with the cross slide in that figure, it follows that the face *d* is also parallel both with the line of motion of slide A and with the surface of the slider table. Parallel work to be held in the vice may therefore be set down upon the surface *d* (between the jaws), which surface will then form a guide to set the work by. The work-gripping surfaces *b* and *e*, Fig. 1507, of the jaws are at a right angle to surface *a*, and therefore also to *d*, therefore the upper surface of work that beds fair upon *d*, or beds fair against *b*, will be held parallel to the line of motion X of the tool and the line Z of the feed traverse. Similarly the upper surfaces A, B of the gripping jaws are parallel to *a a*, hence they may be used to set the work true with the line of feed traverse. The sliding jaw, however, must be a sufficiently easy fit to the slideways that guide it to enable it to be moved by the screw that operates it, and, as a result, it has a tendency to lift upon its guideways so that its face *e* will not stand parallel to *b*, or at a right angle to *d*.

MORTON SHAPING MACHINE.—In Fig. 1508, Plate LXIX.–B, is shown the Morton shaping machine, which, by reason of its solid construction, and of its cutting on the pulley, or backward stroke of the ram, is capable of taking very heavy cuts indeed, an example being shown in Fig. 1509, Plate LXIX.–B.

Referring to the following engravings extracted from the patent, the numerals 1, 2, and 7, Fig. 1510, Plate LXIX.–C, represent, respectively, the frame, the ram, and the table of the shaper. 4 represents an adjustable bearing placed between the column 5 of a frame and the work 6 which is located upon the table 7, and appropriately secured thereon in the manner common to such constructions. The bearing 4 is for the purpose of relieving the strain which would otherwise occur upon the bearings attached to the saddle 8 and the cross bar 9, and confining all of the thrusts practically between the tool and the frame of the machine, thus preventing twisting strains upon the lower connections due to a drawing cut, and removing the strains from the gibs on the cross bar, as the strains are transferred directly to the frame 1, in consequence of the work abutting against the bearing 4. Hence the work does not need to be bolted as rigidly upon the table 7. In consequence, springing of the work is avoided, and perfectly accurate work insured. Other advantages will also be apparent to those who are skilled in the art.

7 represents the table, which is gibbed and fitted over the saddle 8. The saddle is gibbed to a cross rail 9. A raising and lowering screw 12, is adapted to raise and lower the cross rail, carrying with it the table 7. This elevating screw is preferably provided with ball bearings at its upper end at 13, the lower end being the nut in which the screw engages. The feeding device, in connection with the cross rail, consists of a triangular bell-crank arm 14, pivoted at 15, and having formed therein at one extremity a slot 16 The opposite end is pivoted to a connecting rod 17, pivotally attached at its upper end to a rack bar 18, operating in bearings 19, attached to the frame. The rack bar 18 engages a pinion (not shown) which is rigidly attached to a shaft 20. This shaft rigidly engages a ratchet wheel 21 at its outer extremity. Loosely engaging the shaft is a spur wheel 22, and upon this spur wheel is attached a reversible spring ratchet 23, of the ordinary form. It is obvious that the rotation of the shaft 20 by the rack bar in one direction would revolve the spur wheel 22, and that a reverse motion would permit the pinion 21 to revolve freely under the ratchet, and thus create an intermittent motion in the spur wheel 22. This intermittent motion is transferred to pinion 24, which is rigidly attached to a transverse screw, which, by means of appropriate nuts attached to the saddle, furnishes a transverse feed. This motion may be transferred from the same shaft by an appropriate gearing to a continuation of the upper end of the screw 12, by which the perpendicular feed may also be secured. As this detail of mechanism, with regard to the feed, is neither new nor original it will not be described in detail.

In the slotted end 16 of the bell-crank lever 14 there reciprocates, by means of an appropriate bearing, a wrist pin 25, which pin is carried adjustably in a slot in a rotating disk and governed therein by a screw and hand wheel 27. Appropriate gearing connects the shaft of this disk with the driving mechanism.

It is obvious that the adjustment of the wrist pin, by means of the screw and hand wheel, will vary the movement of feed in accordance with the throw of the adjustable crank, thus operating upon the bell-crank lever 14.

In Fig. 1513 is shown the main portion of the driving and reverse gear and their relations by breaking away a portion of the rear end of the frame, upon line *x x* of Fig. 1511, and also showing certain portions of the details in section. 28 is the main driving gear wheel, consisting of a spur wheel rigidly attached to a hollow shaft 29, Fig. 1514, Plate LXIX.–D, which passes through frame 1 and is journaled therein by appropriate bearings 30. These bearings are made very long, virtually covering the whole of the shaft, except that portion to which is attached the double spur pinion 31, each portion of which engages in two rabbeted toothed racks cut in the lower edges of the ram 2. This main driving gear 28 receives its motion through a pinion 32, communicating with the internal gearing 33, engaging with the pinion 34 and shaft 35, appropriately journaled in a frame, and carrying at either end two friction clutch pulleys 36 and 37, of unequal diameters. These pulleys operate loosely upon shaft 35, except as they are brought into engagement with the clutches 39 and 40, rotating rigidly with the shaft. Any appropriate form of clutch or friction pulley may be used which may be suitable for the purpose.

The two clutch pulleys 36 and 37 are connected by appropriate bands to pulleys upon countershafts (not shown) and derive their motion therefrom. By such means they are caused to rotate in opposite directions, and, owing to the difference in the diameters of the clutch pulley wheels 36 and 37, one, if brought in connection with the shaft 35, would rotate it with a slow motion and the other with a fast motion.

It is obvious that by operating the clutches 39 and 40 alternately each clutch pulley may be brought in connection with the shaft 35, so as to give it the motion of the pulley, and that the motion of the planer can be reversed by this means.

The reversing gear consists of a shaft 41, carrying thereon and in engagement with one of the racks formed on the ram a spur wheel 42. (Shown in dotted lines in Fig. 1511.) This spur wheel has a greater circumference than the full length of travel which is given to the ram, with the result that the wheel 42 does not make a full revolution while the ram is making a full stroke. The shaft 41 extends through one side of the frame and carries at its extremity, rigidly attached thereto, a pointer 43. The rotation of the shaft 41 would therefore compel a corresponding rotation of the pointer 43.

Loosely engaging the shaft 41 and concentric with it, is a tappet or shifter wheel 44. (Shown in Figs. 1510 and 1515.) The wheel has a continuous concentric slot, 45, cut in its outer

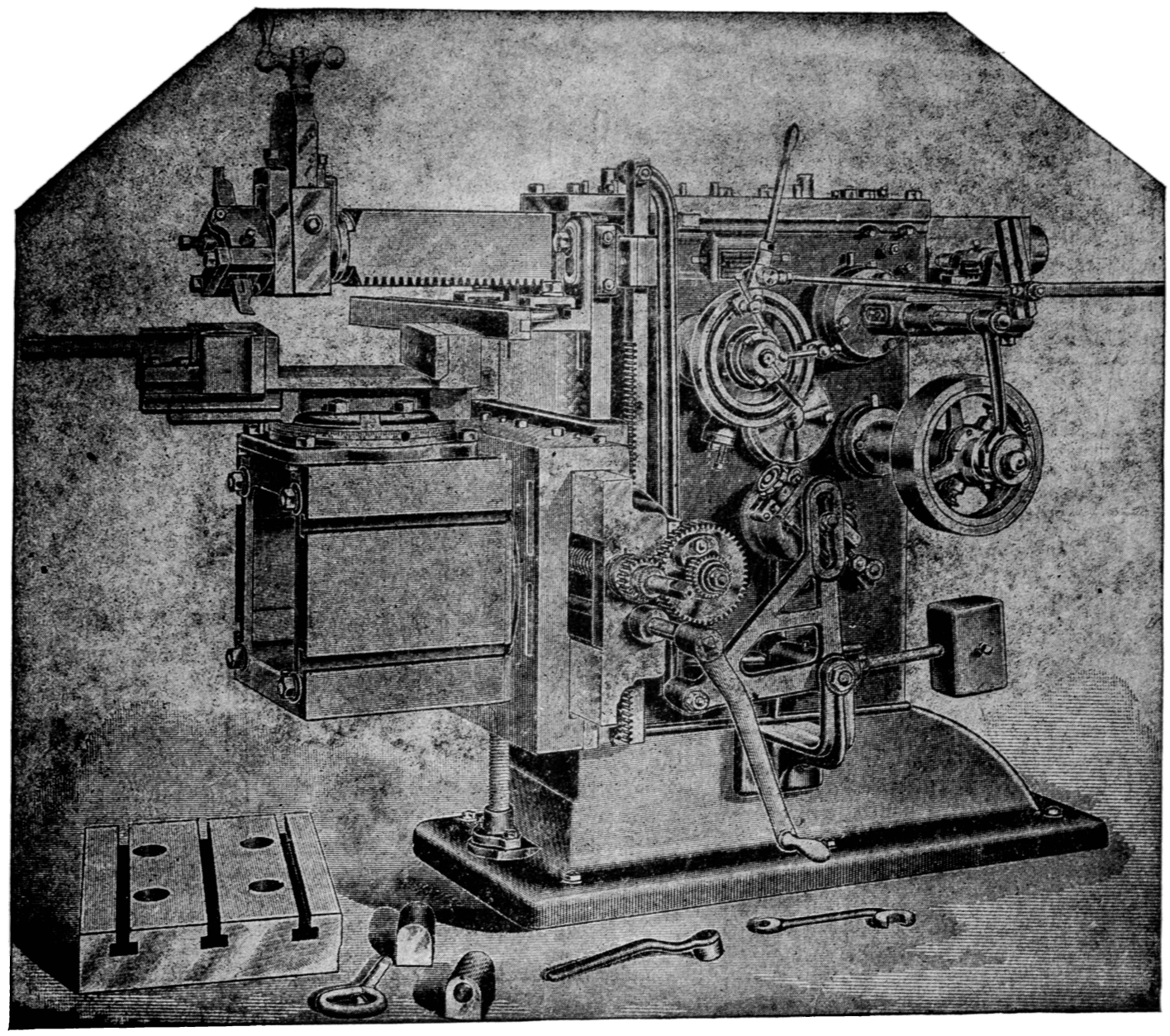

Fig. 1508.

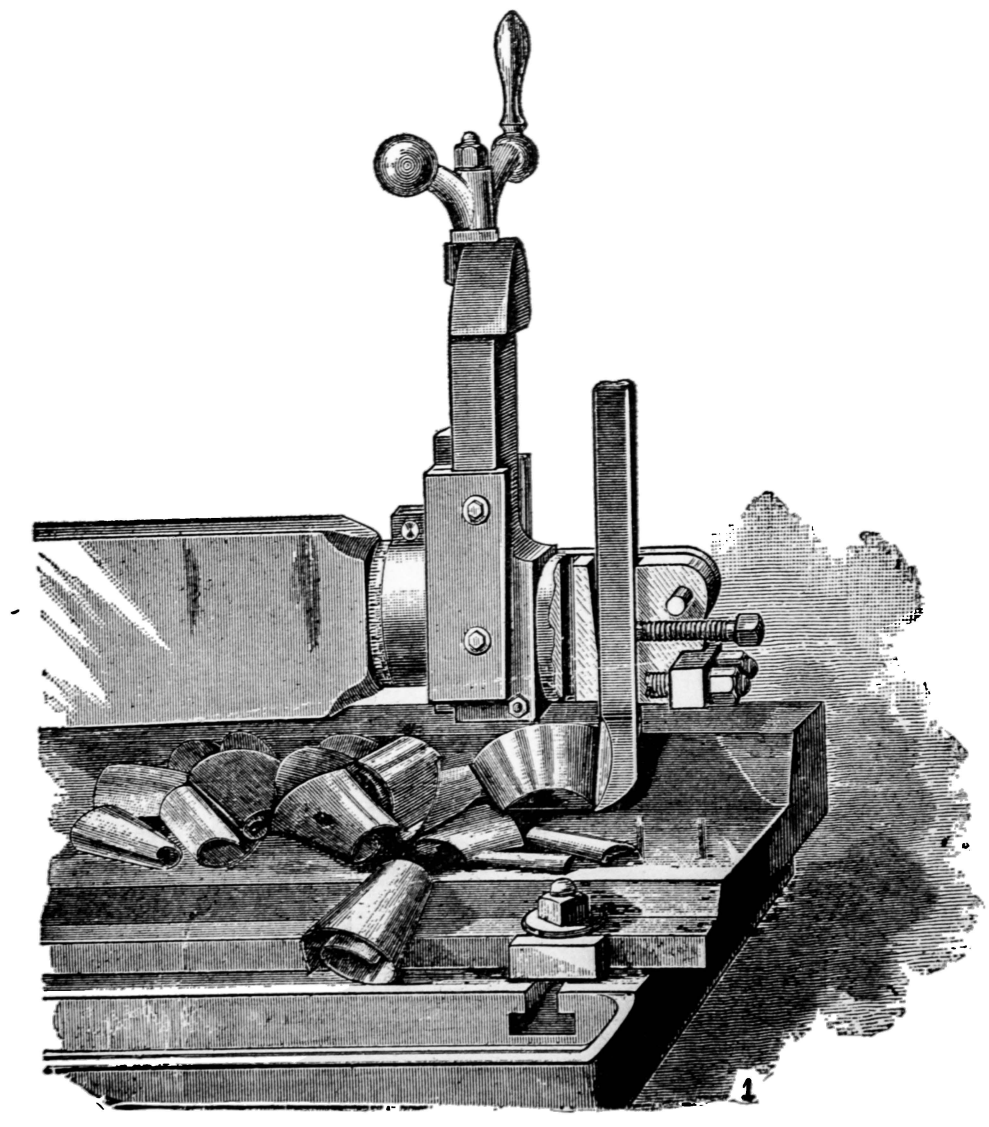

Fig. 1509.

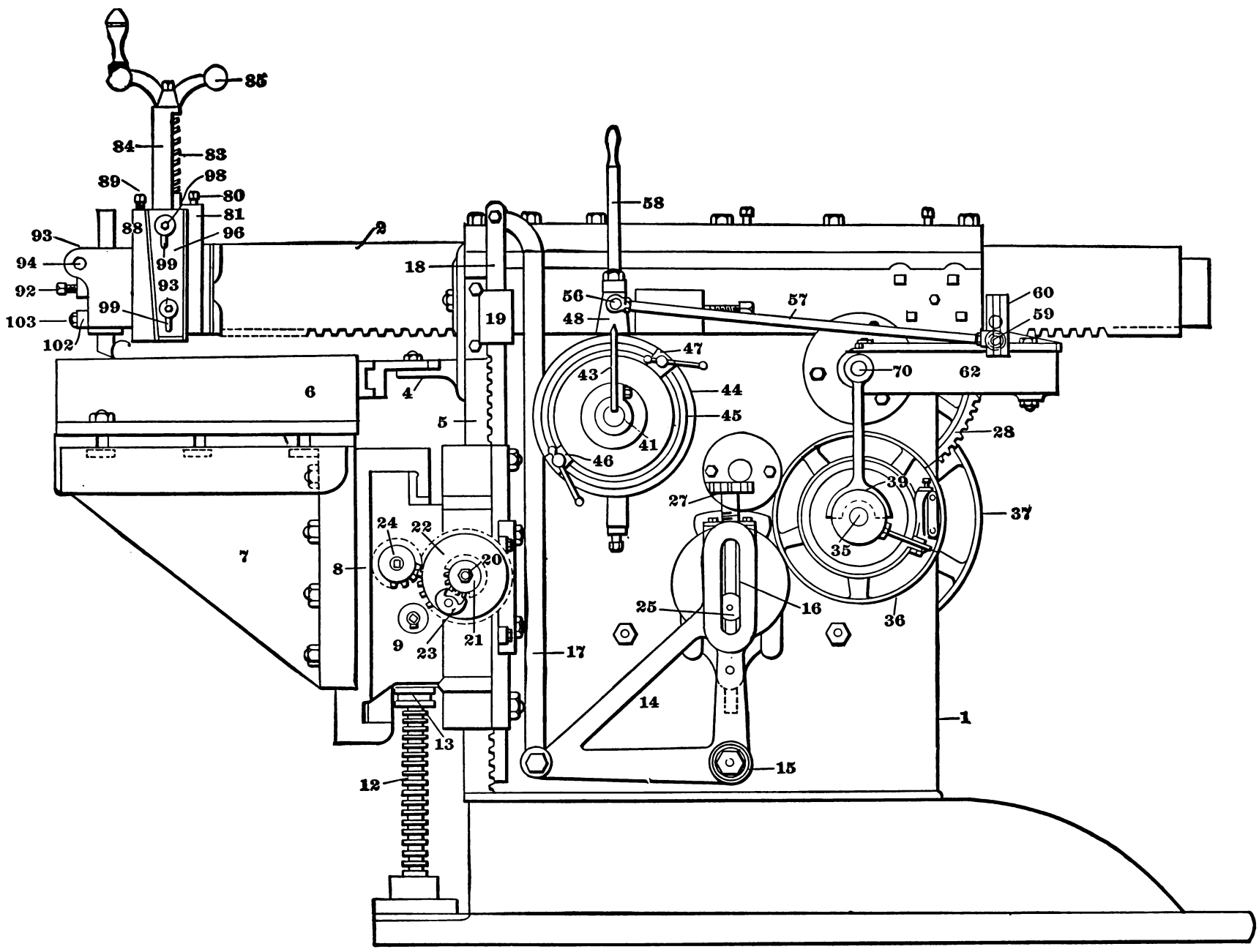

Fig. 1510.

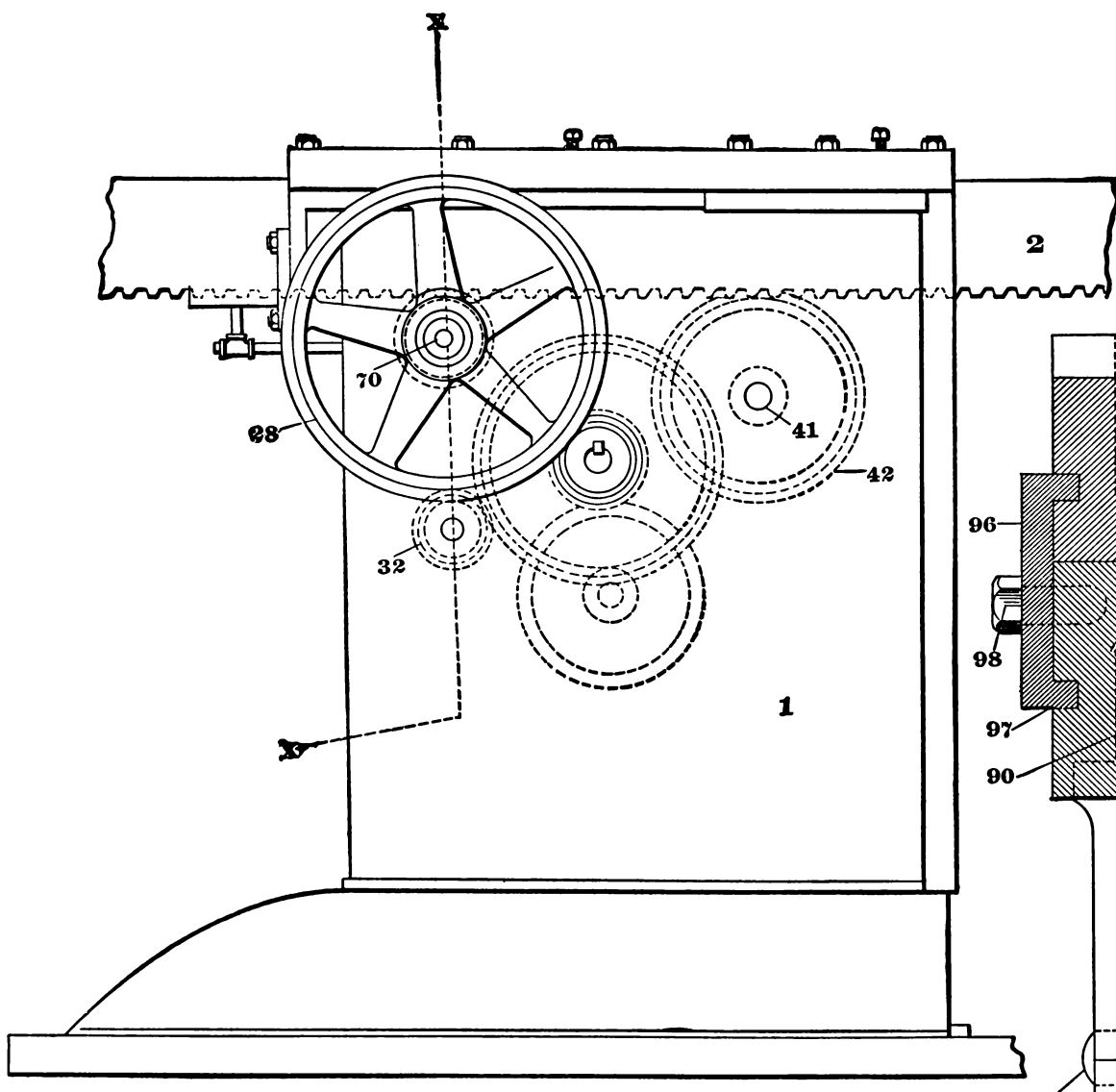

Fig. 1511.

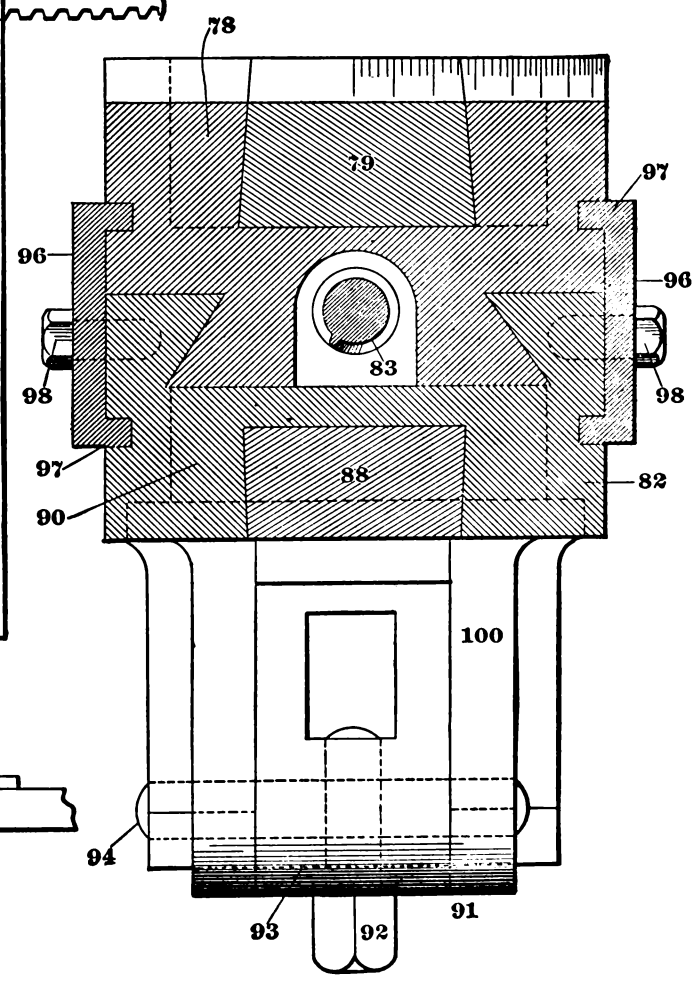

Fig. 1512.

face and carries therein adjustable tappets 46, 47. By means of the shaft 41 and the pointer 43, the motion of the ram is practically registered by the pointer upon the shifter wheel 44, and the tappets 46 and 47 are so adjusted upon the shifter wheel that the pointer would come in contact with one of them at the end of the stroke in either direction, and, as hereinafter shown, the length of the stroke can be governed entirely by the adjustment of the tappets, and at the same time reversed thereby.

48 is a swinging arm which is bored out to slip over the hub of the shifter wheel and upon which it may revolve, except as prevented by the means hereinafter described. In the lower end of the arm in a recess there is provided a plunger, held up to a position against a ring by means of a spring and set screw. The ring has a V-shaped notch cut across its face and is held firmly to the shifter wheel by screws. It is so adjusted that when the parts are in position, the plunger engages in the notch, and thus, to the degree of resistance which it would require to throw it out of the notch against the tension of the spring, locks the shifter wheel and swinging arm 48 together, and some force would be required to compel their disengagement. This forms a positive release, guarding against any slipping of belts or derangement, which otherwise would cause the parts to break.

On the opposite end of the swinging arm 48 is a wrist pin 56, upon which is pivoted a connecting rod 57. A further extension of the swinging arm constitutes a handle 58, by which the reverse may be operated by hand at any point of the stroke.

It will be observed that the operation of this portion of the mechanism is that the length of the stroke is preliminarily adjusted by means of the adjustable tappets in their relations to the circumference of the shifter wheel and the pointer. The shifter wheel does not revolve with the shaft 41 until, in the revolution of the pointer being attached to the shaft, it strikes the tappet corresponding with the direction of that revolution, when it at once compels the shifter wheel to rotate, carrying with it the swinging arm and the connecting rod 57, which, by means of mechanism hereinafter described, reverses the operation of the machine when the arm commences to travel in the opposite direction, until the pointer is brought against the opposite tappet, thus compelling a movement of the shifter wheel, and another reversal of the mechanism.

The reversing mechanism at the opposite end of the machine is shown in elevation in Fig. 1510, a general plan view in Fig. 1515, and an end elevation in partial section is shown in Fig. 1513.

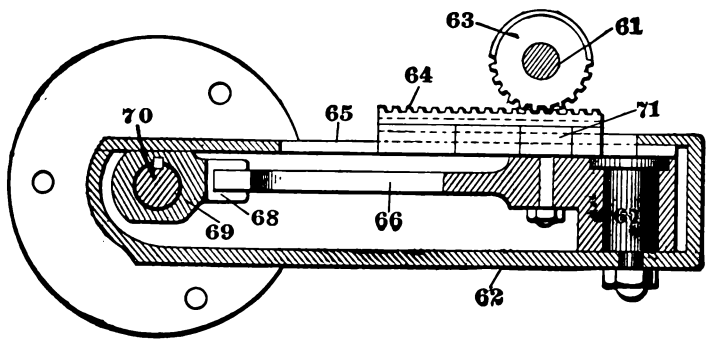

Fig. 1513.

The connecting rod 57 at its rearward extremity connects with a wrist pin 59, which is made adjustable in a crank arm 60. This crank arm is rigidly attached to a shaft 61, rotating in bearings in a casting in the form of a box 62, and in which is placed the shifting mechanism. The shaft 61 carries a pinion 63, which engages in a rack 64, sliding in a longitudinal opening, and has a bearing 65 in the box 62. The partial rotation of the pinion would compel the rack to move longitudinally to and fro in the bearing referred to. Within the box 62 is a horizontal swinging arm 66, which is pivoted vertically at one end at 67. The opposite end engages at 68 pivotally in a clutch 69, embracing the shifter bar 70, which extends through the hollow driving shaft 29. Each extremity of the shifter bar carries a depending yoke engaging the clutch mechanism upon shaft 35, which operates the pulleys 36 and 37.

It is obvious that the shifter bar 70 will throw the clutches in or out, and thus engage pulleys 36 and 37 alternately. At a point between the pivot 67 of the swinging arm 66 and its extremity at 68 is mounted upon a vertical pivot a friction roller 71. The under side of the rack 64 is formed into a peculiar irregular slot, in which the friction roller 71 engages. The longitudinal motion of the rack 64, being held closely in its bearings 65 in the upper portion of the box 62, compelling the friction roll 71 to occupy the position upon either side of the central irregular slot, would necessarily compel the swinging arm 66 to oscillate horizontally upon its pivot 67, and by means of its engagement by intermediate connections with the shifter bar 70 would compel this to reciprocate longitudinally, and operate the clutches and the clutch pulleys, as hereinbefore described. This mode of providing for the reciprocation of the shifter bar forms a lock at each end of the irregular slot, by which the shifter bar is positively prevented from releasing the clutches.

For convenience of construction the rack is made in two pieces bolted together, the upper one being a rack, the lower one a block, in which is cut the irregular slot referred to above.

It is obvious that the longitudinal motion of the rack 64, created as it is by the rotation of the pinion 63, can be varied by means of the shifting wrist pin 59. The crank arm 60 can be continued below its engagement of the shaft 61, and by dropping the wrist pin 59 below the centre a reverse crank can be obtained. Upon the inner end of the shaft 61 is formed a friction mechanism by means of a friction collar, held up by a spring, inclosing the shaft and compressed by a cap nut. This forms a friction on the side of the bearing, and by tightening the cap nut the friction can be increased or diminished. The purpose of this is to overcome the backlash and to hold the reversing mechanism locked.

From the description of the foregoing details the manner of operation of the reversing gear can be readily seen, and that by operating the handle 58 the ram can be reversed or stopped and started at any part of its stroke.

Fig. 1510 shows the machine set for a pulling or drawing cut, and in order to reverse it and make it a pushing-cut shaper all that is necessary to do is to change the heads upon the ram, and by shifting the wrist or crank pin to the opposite side of the crank arm 60 the motion of the shifter is reversed, when, by means of the appropriate belting, the machine becomes a pushing-cut shaper. There is an intermediate position in the reversing in which both clutches upon the friction pulleys are out, and, consequently, a point at which the handle 58 can be set when the machine would entirely cease its motion, as neither pulley would be driving.

Fig. 1512 is a transverse sectional view of a tool holder.

78 is a block interiorly threaded for the purpose of receiving the head of the ram. In the upper face of this block is a plug 79. This blocks fits in a dovetailed slot, its lower face being threaded to correspond with the threads of the block 78, and thereby to engage the screw upon the head of the ram. The outer face of the plug is controlled by a set screw 80, passing through a lug 81 on block 78. By means of the set screw 80 the plug 79 can be forced against the ram at whatever angle the head may be turned, and thus it is rigidly held in position.

A secondary block 82 has cut through it perpendicularly a dovetailed slot, and the block 78 is fitted into this, allowing a certain amount of perpendicular motion, which motion is controlled by the screw 83, engaging rotatably in the lug upon a bracket 84, and controlled by hand wheel 85. This screw engages in block 78, running in a suitable recess cut through the same. The secondary block 82 is also interiorly threaded, preferably, with the same sized bore, and with threads of the same pitch as the block 78. In the upper portion of it is a plug 88, similar in construction and principle as 79. This engages the tool holder when screwed into place, as hereinafter described, and by means of the set screw 89 is enabled to fix it in position.

One of the tool holders is shown in a plan view in Fig. 1512. One end of it, 90, is threaded to correspond with interior threads in secondary block 82, engaging the same as shown in dotted lines in Fig. 1512. The opposite end at 91 is slotted to receive the very solid, closely fitted, tool holding relief block 93. This heavy relief block 93 is pivotally attached to the sliding section by a taper bolt 94, passing through its upper portion, and two lugs on the head. The relief block 93 carries centrally a set screw 92, whereby the contained tool may be securely held in place, the block 100 and its spring taking up all lost motion. The relief block is held in position at its lower edge by a binder 102, Fig. 1510, held by two bolts 103, 103, tapped into the block 100.

As shown in elevation in Fig. 1510, and in section in Fig. 1512, there are clamps 96, 96, provided with raised edges 97, 97, adapted to slide in corresponding grooves cut in the sides of main sliding section 82 of the head, and the base 78, as shown in cross section in Fig. 1512. These slots are not parallel, but approach from above downward, both sides of the head being alike. Hence as the clamps 96, 96 are moved upwardly they draw the parts rigidly together, taking up all wear, and holding them in proper position. The clamps are controlled by screw bolts 98, 98 operating through slotted holes 99, 99 in the sides of the clamps, and by means of which they can be held rigidly in any adjusted position. It will be observed that the construction throughout is such that the head swivels upon the ram, and by means of the gripping blocks 79, 88 and side clamps 96, 96 all the parts are rigidly bound together when performing work, and yet are easily and perfectly adjustable for all purposes. The swivel head is inserted into the sliding section 82, Fig. 1512, and when adjusted is clamped by the gripping block 88. The usual means are provided for holding the tool therein, and hence need not be described.

SETTING WORK IN SHAPER VICES.—In setting work in shaper vices the difficulty is to cause the work to seat itself upon its bottom face, on account of the pressure of the chuck jaws having a tendency to lift the work. The nature of the work has an important bearing in this connection. Suppose, for example, that we have a connecting-rod key to shape, and it is to be considered whether the faces or the edges shall be shaped first. Now if the side faces are out of parallel it will take more filing to correct them than it will to correct the same degree of error in the edges; hence it is obviously desirable to proceed with a view to make all surfaces true, but more especially the side faces. As the set of the key while shaping these faces is most influenced by the manner in which the fixed jaw surface meets

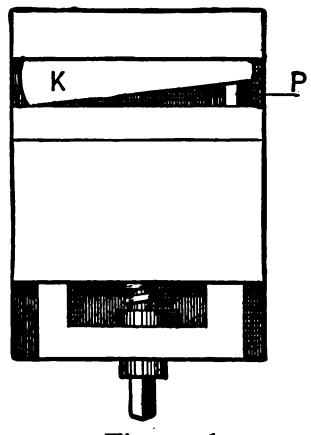

Fig. 1516.

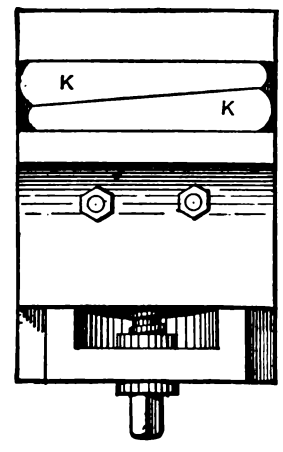

Fig. 1517.

the work, and as an edge will be the surface to meet the fixed jaw faces when the side faces are shaped, it will be best to dress one edge first, setting the key or keys, as the case may be, so as to cut them with the tool operating lengthways of the key; one edge being finished, then one face of each key must be shaped, the key being set for this purpose with the surfaced edge against the fixed jaw. As the width of the key is taper, either a chuck with a taper attachment that will permit the sliding jaw to conform itself to the taper of the key must be used (vices having this construction being specially made for taper work as will be shown hereafter), or else the key must be held as in Fig. 1516, in which K represents the key with its trued edge against the fixed jaw, at P is a piece put in to compensate for the taper of the key, and to cause the other edge to bed firmly and fairly against the fixed jaw.

The first side face being trued, it should be placed against the fixed jaw while the other edge is shaped. For the remaining side face we shall then be able to set the key with a trued edge against the fixed jaw, and a true face resting upon a parallel piece, while the other edge will be true for the piece P, Fig. 1516, to press against, and all the elements will be in favor of setting the key

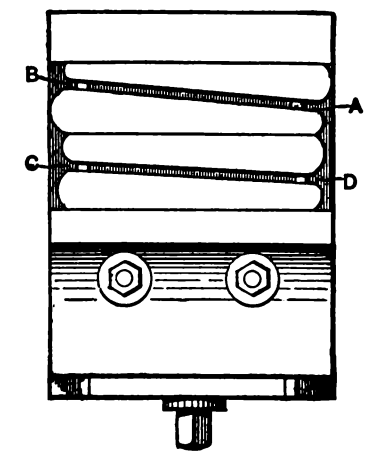

Fig. 1518.

so that the sides will be parallel one to the other, and the edges square with the faces.

In putting in the piece P, Fig. 1516, the key should be gripped so lightly that it will about bear its own weight; piece P may then be pushed firmly in with the fingers, and the vice tightened up.

If there are two keys the edges and one face may be trued up as just described, and both keys K, Fig. 1517, chucked at once by inverting their tapers as shown in figure. But in this case unless the edges are quite true they may cause the keys not to bed fair on the underneath face, and the faces therefore to be out of

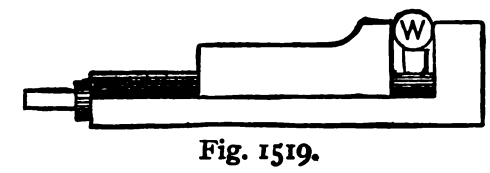

Fig. 1519.

parallel on either or both of the keys. If there are a number of keys to be cut to the same thickness it may be done as follows:—

Plane or shape first one edge of all the keys; then plane up one face, chucking them with one planed edge against each vice jaw, and put little blocks (A, B, C, D, Fig. 1518) between the rough edges; then turn them over, chuck them the same way and plane the other face, resting them on parallel pieces; then plane the other edges last.

In place of the small blocks A, B, C, D, a strip of lead, paste-

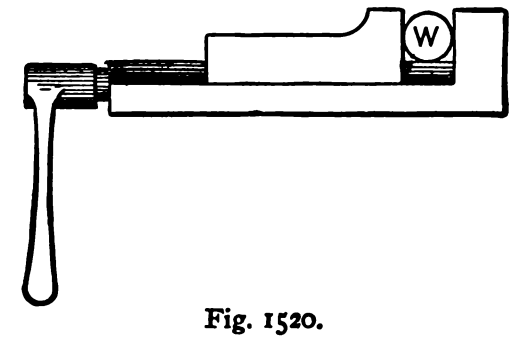

Fig. 1520.

board, or wood, or for very thin work a piece of lead wire, may be used.

Cylindrical work may be held in a vice chuck, providing that the top of the vice jaws is equal in height to the centre of the work, as in Fig. 1519, a parallel piece being used to set the work true. When, however, the work is to be shaped at one end only, it is preferable to hold it as in Fig. 1520, letting its end project out from the side of the chuck. In some vices the jaws are wider than the body of the chuck, so that cylindrical work may be held vertical, as in Fig. 1521, when the end is to be operated upon.

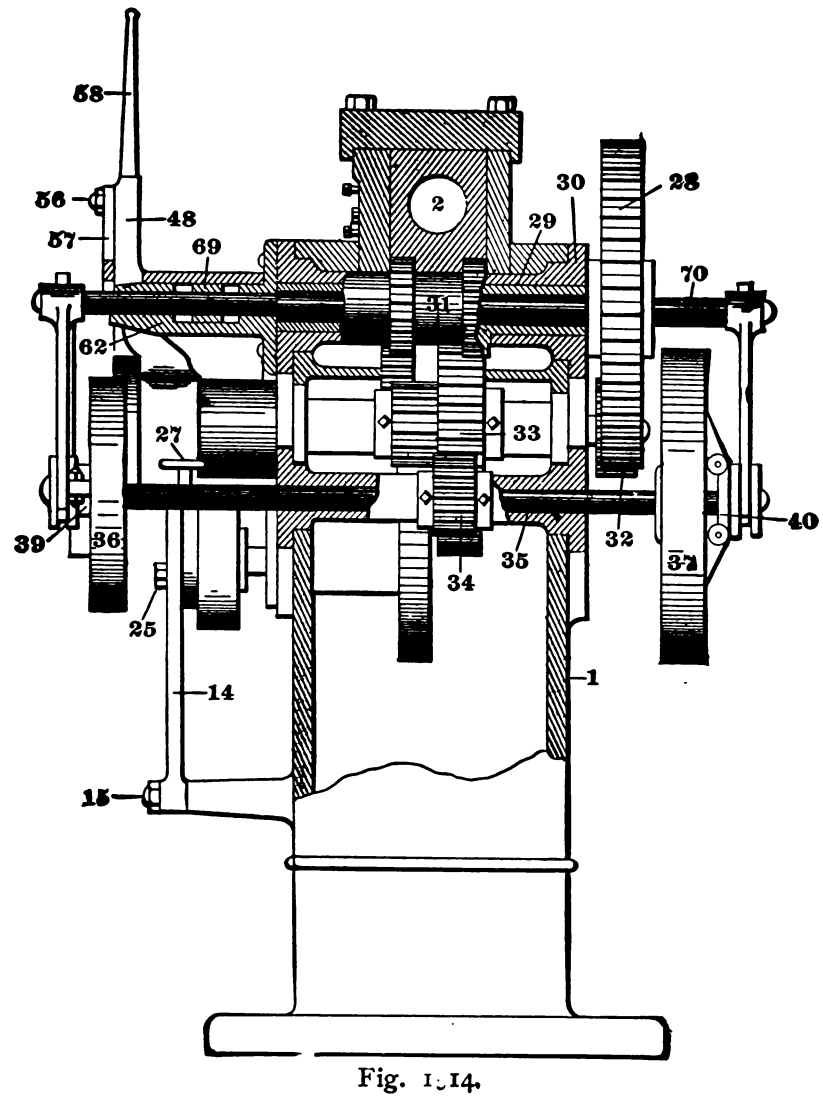

Fig. 1514.

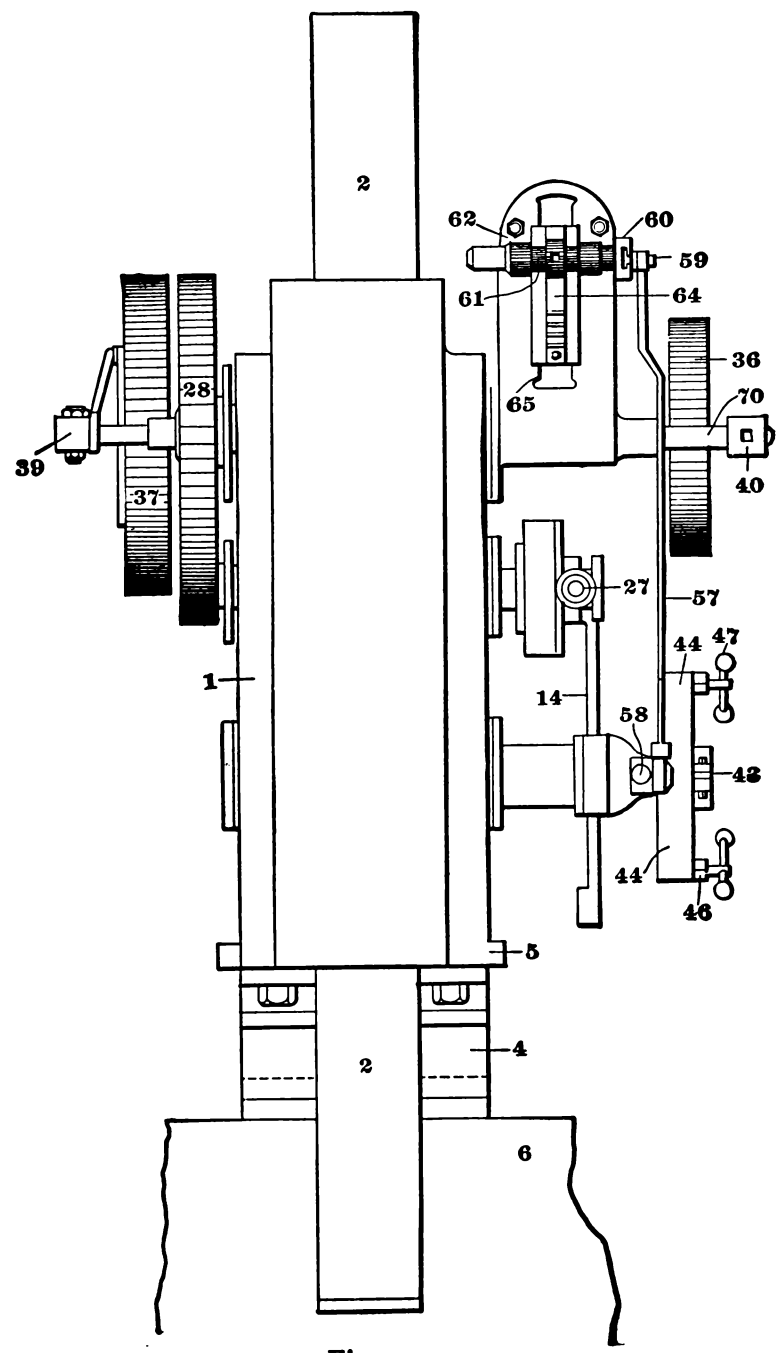

Fig. 1515.

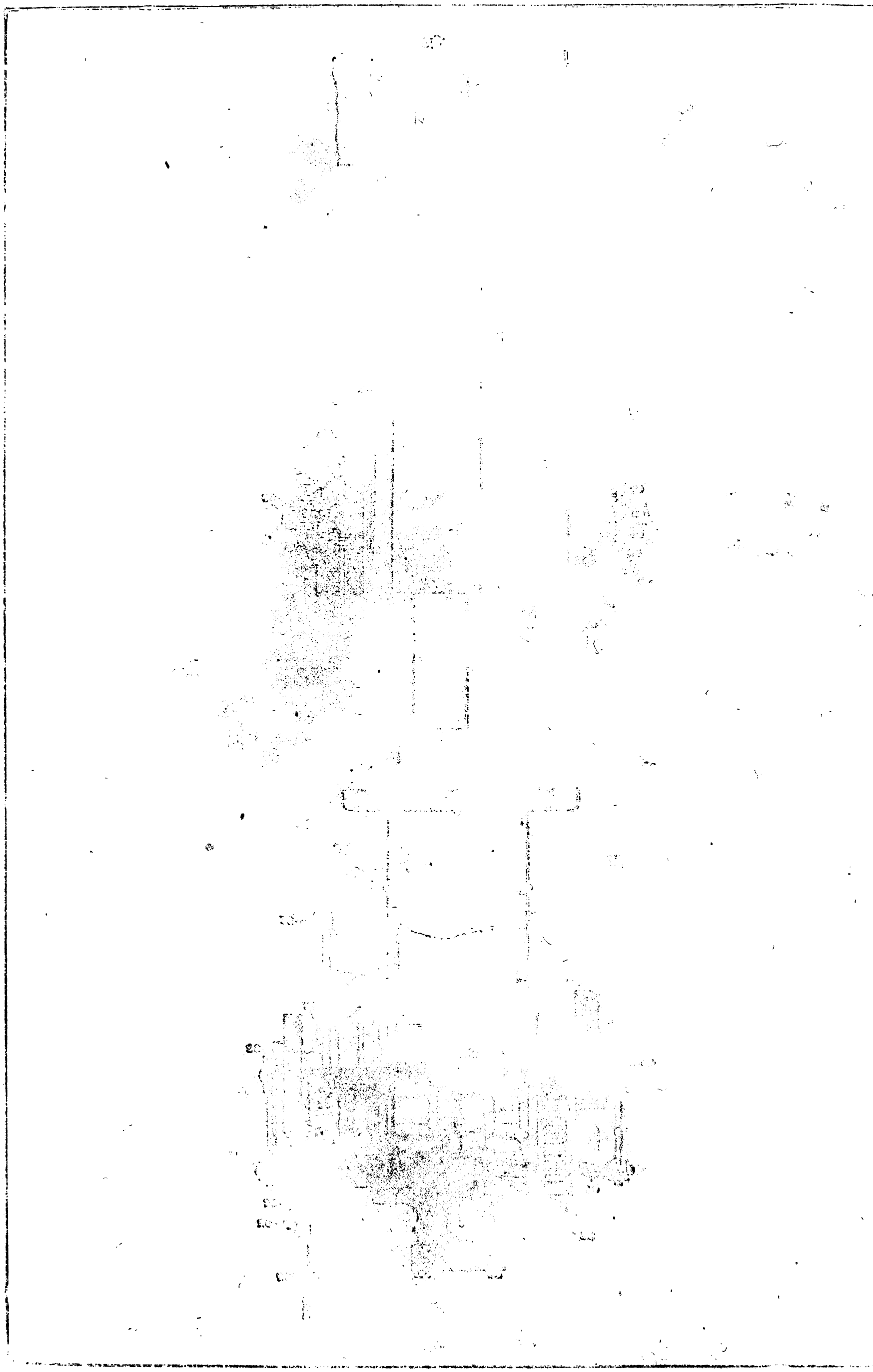

Fig. 1522 represents a simple form of shaper or planer chuck, such chucks being used upon small planing machines as well as upon shaping machines.

The base A is bolted to the work table, and is in one piece with the fixed jaw B. The movable jaw C is set up to meet the work by hand, and being free to move upon A may be used for either taper or parallel work. To fasten C upon the work, three screws threaded through F abut against the end of C; F being secured to the upper surface of A by a key or slip, which fits into

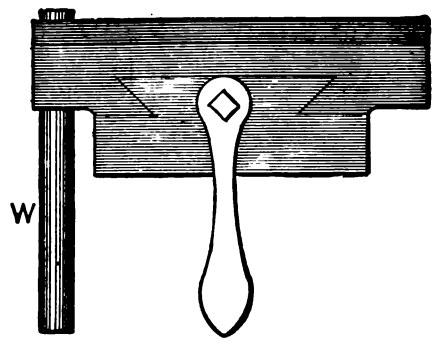

Fig. 1521.

a groove in F, and projects down into such of the grooves in the upper surface of A as may best suit the width of work to be held in the vice; C is held down by the bolts and nuts at G.

The operation of securing work in such a chuck is as follows:—The screws both at F and at G being loosened, and jaw C moved up to meet the work and hold it against the fixed jaw B, then nuts G should be set up lightly so that the sliding jaw will be set up under a slight pressure, screws F may then be set up and finally nuts G tightened.

This is necessary for the following reasons:—The work must,

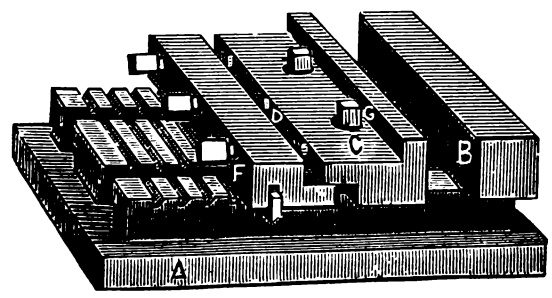

Fig. 1522.

in most cases, project above the level of the jaws so that the tool may travel clear across it; hence, the strain due to holding the work is above the level of the three screws, and the tendency, therefore, is to turn the jaw C upwards, and this tendency the screws G resist. A similar chuck mounted upon a circular base so that it may be swivelled without moving the base on the work table is shown in Fig. 1523. The capacity to swivel the upper part of the chuck without requiring the base of the chuck to be moved upon the table is a great convenience in many cases.

Fig. 1524 represents an English chuck in which the fixed jaw

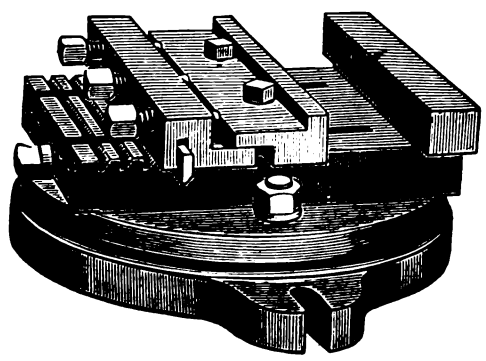

Fig. 1523.

is composed of two parts, A which is solid with the base G, and D which is pivoted to A at F. The movable jaw also consists of two parts, B which carries the nut for the screw that operates B, and C which is pivoted to B at E. The two pivots E, F being above the surface of the gripping jaws C, D, causes them to force down upon the surface of G as the screw is tightened, the work, if thin, being rested, as in the case of the chuck shown in Fig. 1523, upon parallel pieces.

Fig. 1525 represents a chuck made by W. A. Harris, of Providence. The jaws in this case carry two pivoted wings A, B, between the ends of which the work C is held, and the pivots

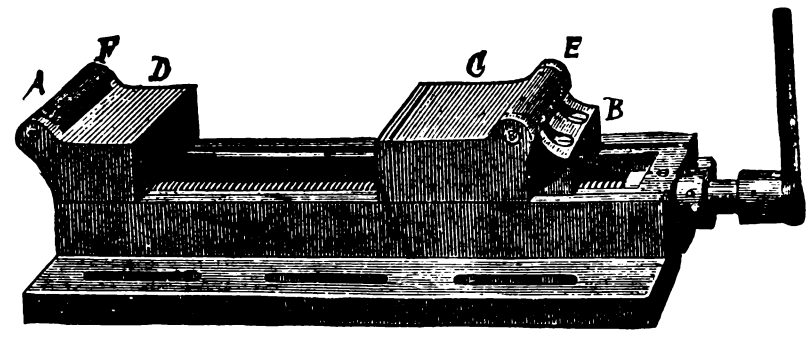

Fig. 1524.

being above the level of the work the tendency is here again to force the work down into the chuck, the strain being in the direction denoted by the arrows.

Here the work rests on four pins which are threaded in the

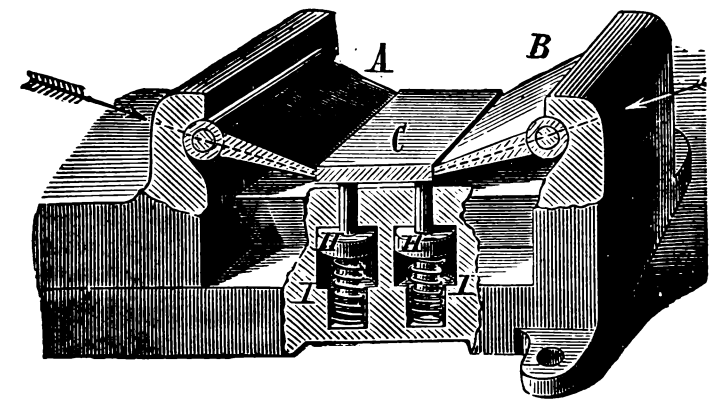

Fig. 1525.

collars H, so that by rotating the pins they will stand at different heights to suit different thicknesses of work, or they may be set to plane tapers by adjusting their height to suit the amount of taper required. The spiral springs simply support the pins, but

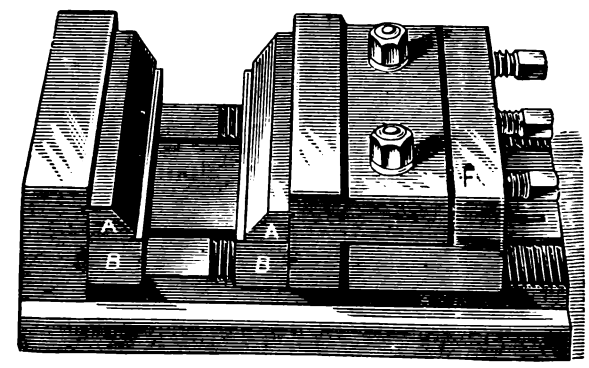

Fig. 1526.

as the jaws close the pins lower until the washer nuts H meet the surface of recess I.

Figs. 1526 and 1527 represent Thomas's patent vice, which possesses some excellent conveniences and features.

In Fig. 1526 it is shown without, and in Fig. 1527 with a swivel

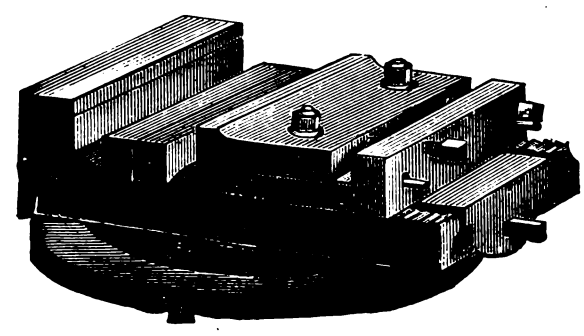

Fig. 1527.

motion. The arrangement of the jaws upon the base in Fig. 1526 is similar to that of the chuck shown in Fig. 1522, but instead of there being a key to secure the piece F to the base, there is provided on each side of the base a row of ratchet teeth, and there is within F a circular piece G (in Fig. 1528) which is serrated to engage the

ratchet teeth. This piece may be lifted clear of the ratchet teeth by means of the pin at H, and then the piece F may be moved freely by hand backwards or forwards upon the base and swung at any required angle, as in Fig. 1528, or set parallel as in Fig 1527; F becoming locked, so far as its backward motion is concerned, so

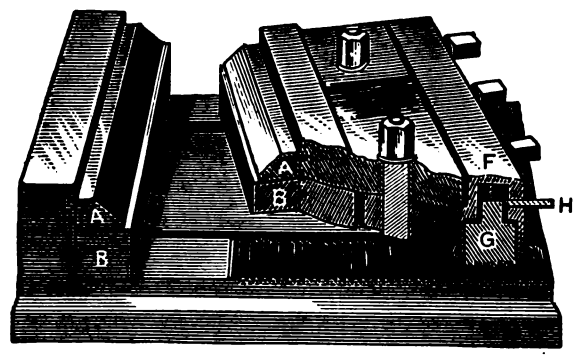

Fig. 1528.

soon as H is released and G engages with the ratchet teeth on the base. But F may be pushed forward toward the fixed jaw without lifting H, hence the adjustment of the sliding jaw to the work may be made instantaneously without requiring any moving or setting of locking keys or other devices.

It is obvious that it is the capability of G to rotate in their

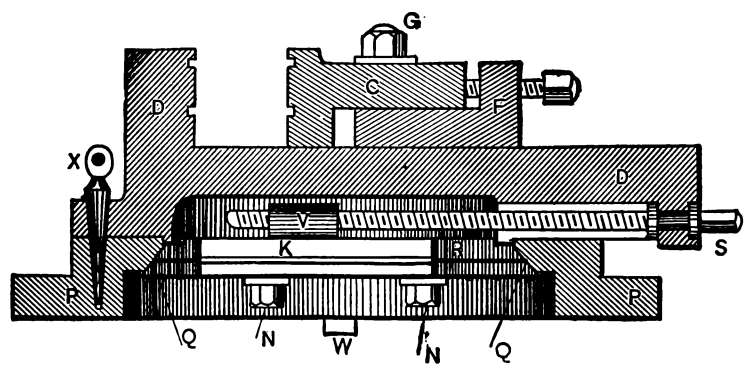

Fig. 1529.

sockets that enables F to be set at an angle and still have the teeth of G engage properly with those on the base plate.

The mechanism for swivelling the upper part or body upon the base and for locking it in its adjusted position is shown in Figs. 1529 and 1530. The body D is provided with an annular ring fitting into the bore of the base, which is coned at Q. The half-circular disks R fit this cone and are held to the body of the chuck

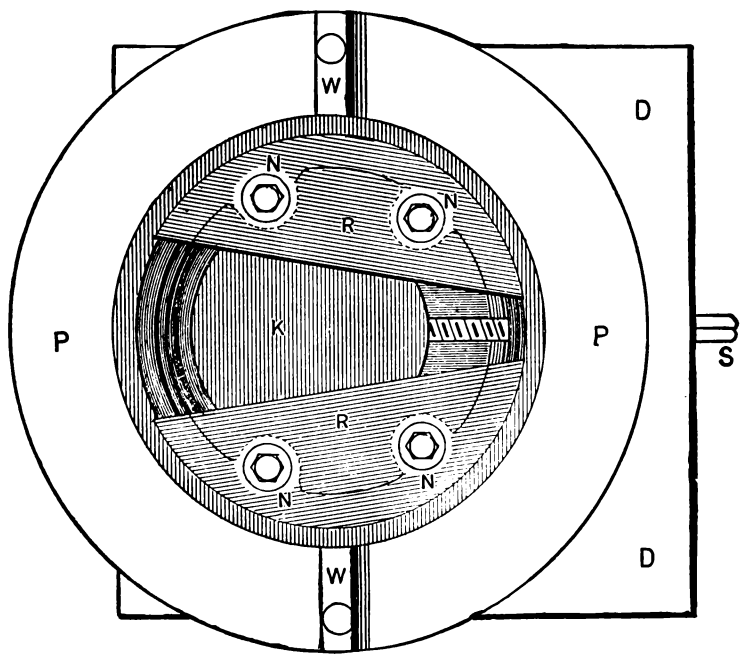

Fig. 1530.

by four bolts N, which are adjusted to admit disks R to move without undue friction. K is a key having on it the nut V, which receives a screw whose squared end is shown at S. By operating S in one direction key K expands disks R, causing them to firmly grip the base at the bevel Q, hence the base and the body are locked together. By operating S to unscrew in the nut V, K is moved in the opposite direction and R, R release their grip at Q and the body D may be swung round in any position, carrying with it all the mechanism except base P.

To enable the body to be readily moved a quarter revolution, or in other words, moved to a right angle, there is provided a taper pin, the base having holes so situated that the body will have been moved a quarter revolution when the pin having been removed from one hole in the base is seated firmly home in the other.

Referring again to Fig. 1526, there are shown one pair of

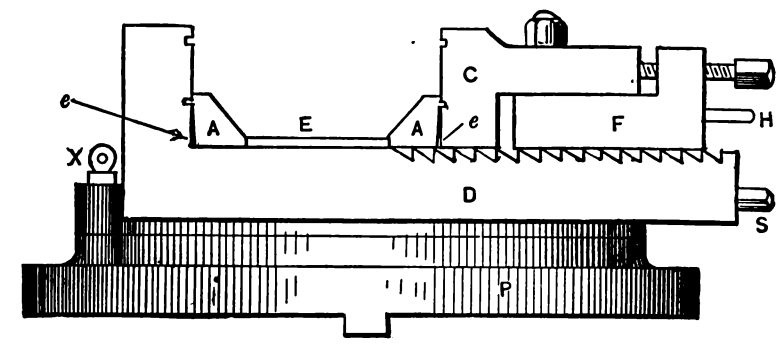

Fig. 1531.

parallel pieces marked respectively A, having bevelled edges, and another pair marked respectively B. Both pairs are provided with a small rib fitting into a groove in the jaws of the chuck, as shown in the figure.

These ribs and grooves are so arranged that the upper pair (A, A) may be used in the place of the lower ones, and the uses of these pieces are as follows :—

Suppose a very thin piece of work is to be planed, and in order to plane it parallel, which is ordinarily a difficult matter, it must

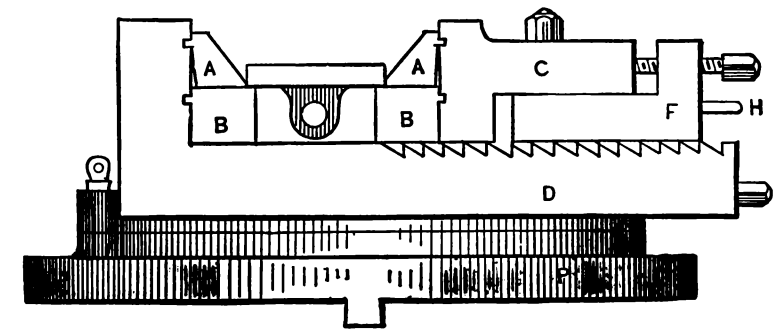

Fig. 1532.

bed fair down upon the face of the vice, which it is caused to do when chucked as in Fig. 1531, in which the work is shown laid flat upon the face of the vice, and gripped at its edges by the pieces A A.

These pieces, it may be noted, do not bed fair against the gripping faces of the jaws, but are a trifle open at the bottom as at *e*, *e*, hence when they are pressed against the work they cant over slightly and press the work down upon the chuck face causing

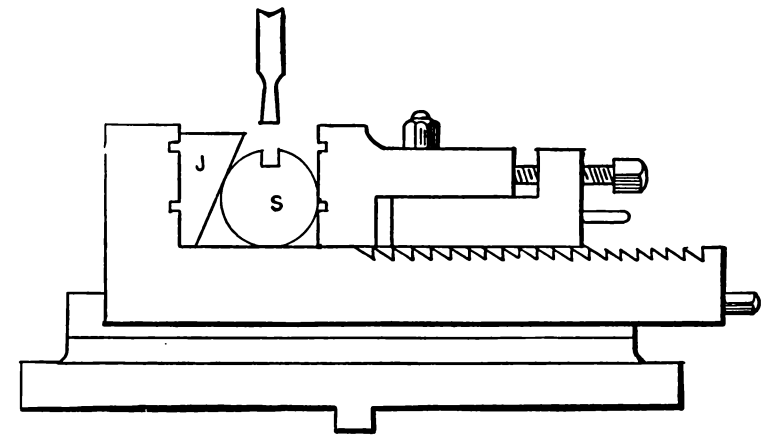

Fig. 1533.

it to bed fair. Furthermore, the work is supported beneath its whole surface, and has, therefore, less tendency to spring or bend from the holding pressure; and as a result of these two elements much thinner work can be planed true and parallel than is possible when the work is lifted up and supported upon separate parallel pieces, because in the latter case the work, being unsupported between the parallel pieces, has more liberty to bend from the pressure due to the tool cut, as well as from the holding pressure.

Fig. 1532 shows the chuck holding a bracket, having a projection or eye. The work rests on pieces B, B, and is gripped by pieces A,A. It will be observed that A, A being beveled enables the cut to be carried clear across the work.

Fig. 1533 represents the chuck in use for holding a piece of

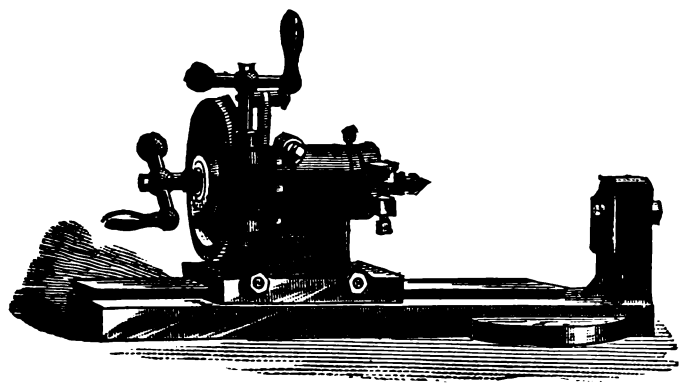

Fig. 1534.

shafting S to cut a keyway or spline in it. In this case a bevelled piece J is employed, its bevelled face holding the work down upon the chuck face.

Fig. 1534 represents a chuck termed shaper centres, because the work is held between centres as in the case of lathe work.

The live spindle is carried in and is capable of motion in a sleeve, the latter having upon it a worm-wheel, operated by a worm, so that it can be moved through any given part of a circle, and has index holes upon its face to determine when the wheel has been moved to the required amount.

For work that is too large to be operated upon in the class of shaping machine shown in Fig. 1506, and yet can be more conveniently shaped than planed, a class of machine is employed in which the tool-carrying slide is fed to the work, which is chucked to a fixed table or to two tables.

Fig. 1535 represents a machine of this class. The tool-carrying slide A, in this case, operates in guideways provided in B, the latter being fitted to a slideway running the full length of the top of the frame M. The base slider B is fed along the bed by means of a screw operating in a nut on the under side of B, this screw being operated once during each stroke of the tool-carrying slide A, by means of a pawl feeding arrangement at F, which corresponds to the feeding device shown in Fig. 1501.

Two vertical frame pieces D, D are bolted against the front face of the machine, being adjustable along any part of the bed or frame length, because their holding bolts have heads capable of being moved (with the frame pieces D) along the two T-shaped grooves shown, their T-shape being visible at the end of the frame or bed. To frames D are bolted the work-holding tables E, E, the bolts securing them passing into vertical T-grooves in D, so that E may be adjusted at such height upon D as may be found necessary to bring the work within proper range of the cutting tool. The work tables E, E are raised or lowered upon D by means of a vertical screw, which is operated by the handle H, this part of the mechanism accomplishing the same end as the elevating mechanism shown in Fig. 1496. The swivel head J is here provided at its top with a segment of a worm-wheel which may be actuated to swivel that head by the worm G.

The swivel head may thus be operated upon its pivot, causing the tool point to describe an arc of a circle of which the pivot is the centre. To steady the swivel head when thus actuated, there is behind the worm segment a V-slide that is an arc, whose centre is also the centre of the pivot.

The tool-carrying slide A is operated as follows: The driving pulley P rotates a shaft lying horizontal at the back of the machine. Along this shaft there is cut a featherway or spline driving a pinion which operates a link mechanism such as described with reference to Fig. 1550.

The means of adjusting the distance the head of A shall stand out from B, are similar to that described for Fig. 1496, a bolt passing through A, and in both cases attaching to a connecting rod or bar.

At K is a cone mandrel such as has been described with refer-

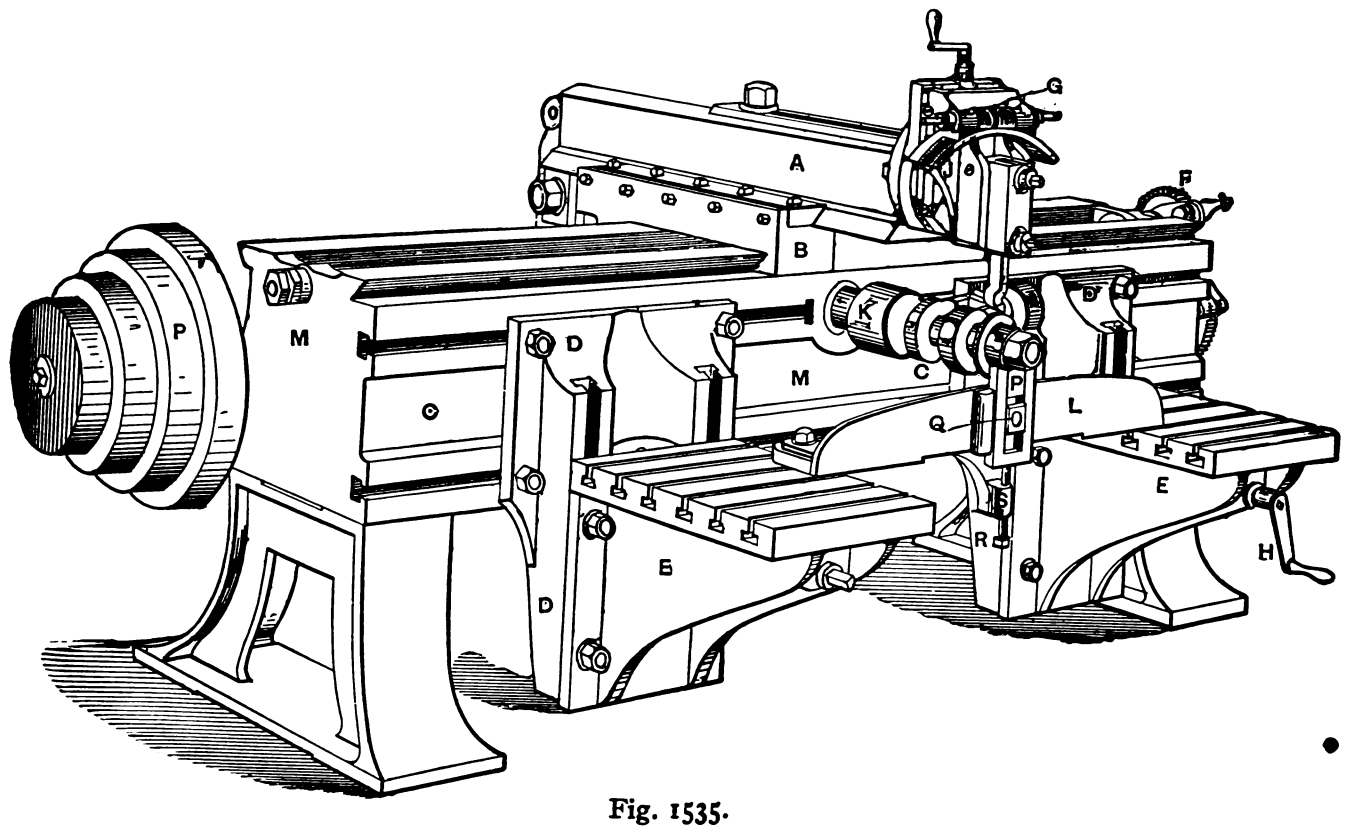

Fig. 1535.

ence to lathe work upon which is chucked a cross-head C. By means of suitable mechanism, this mandrel is rotated to feed the circular circumference of the cross-head jaws to the cut, the slider B remaining in a fixed position upon the bed M.

To support the outer end of the cone mandrel a beam L is bolted to the two tables E, E. On L is a slideway for the piece P. At S is a lug upon E through which threads a screw R, which adjusts the height of the piece P, while Q is a bolt for securing P in its adjusted position. This cone mandrel and support is merely an attachment to be put on the machine as occasion may require.

Fig. 1536 represents a shaping machine by the Pratt and Whitney Company. In this machine a single sliding head is used and the work remains stationary as in the case of the machine shown in Fig. 1535. The vice is here mounted on a slide which enables the work to be finely adjusted beneath the sliding bar independently of that bar, which is provided with a Whitworth quick-return motion.

As the tool-carrying slide of a shaping machine leaves its guideways during each stroke, the tool is less rigidly guided as the length of slide stroke is increased, and on this account its use is limited to work that does not require a greater tool stroke than about 18 inches, and in small machines not to exceed 12 inches. The capacity of the machine, however, is obviously greatest when

the length of the work is parallel to the line of motion of the feed traverse. Work whose dimension is within the limit of capacity

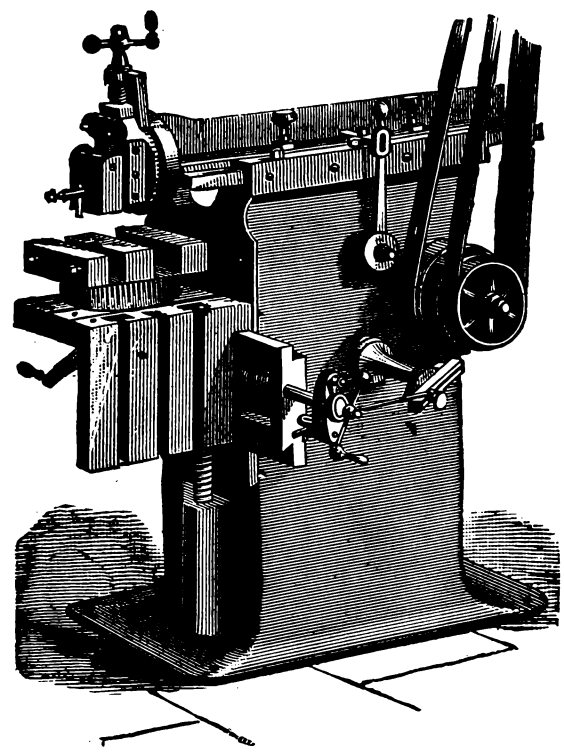

Fig. 1540.

of the shaper can, however, be more expeditiously shaped than planed because the speed of the cutting tool can be varied to suit the nature of the work, by reason of the machine having a cone pulley, whereas in a planing machine the cutting speed of the tool is the same for all sizes of work, and all kinds of metal.

In shaping machines such as shown in Fig. 1537, or in similar machines in which the work table is capable of being traversed instead of the head, the efficiency of the work-holding table and of the chucking devices may be greatly increased by constructing the table so that it will swivel, as in Fig. 1538, which may be done by means of the employment of Thomas's swivelling device in Fig. 1530. By this means the ends of the work may be operated upon without removing it from the chuck. Or the work may be shaped taper at one part and parallel at another without unchucking it.

Fig. 1539 shows a circular table swivelled by the same device, sitting upon a work table also swivelled.

Fig. 1540 represents a general view of a shaping machine having the motion corresponding in effect to a planing machine, the object being to give a uniform rate of speed to the tool throughout, both on its cutting and return stroke. The feed always takes place at the end of the return stroke, so as to preserve the edge of the tool, and the length of the stroke may be varied, without stopping the machine, by simply adjusting the tappets or dogs, the range of stroke being variable from $\frac{1}{4}$ inch to 20 inches, while the return stroke is 40 per cent. quicker than the cutting one. There are two different rates of cutting speed, one for steel and the other for the softer metals.

The ram or bar is provided with a rack (Z, Fig. 1545) which engages with a pinion S, Fig. 1541, H being the driving shaft driven by the belt cones A and B. These two cones are driven by separate belts, but from the same counter-shaft, one being an open and the other a crossed belt. The open belt drives either the largest step of pulley B, giving a cutting speed suitable for steel, or the smaller step, giving a cutting speed for softer metals, as cast iron, &c. The crossed belt drives, in either case, the pulley A for the quick-return stroke, and this pulley revolves upon a sleeve or hub C, which revolves upon the shaft H. The sleeve or hub C is in one piece with a pulley C, whose diameter is such as to leave an annular opening between its face and the bore of the largest step of cone pulley B, and pulley A is fast to the hub or sleeve C. It will be seen that as the driving belts from the counter-shaft are one open and one crossed, therefore pulley A runs constantly in one direction, while pulley B runs constantly in the other, so that the direction of motion of the driving shaft H depends upon whether it is locked to pulley A or to pulley B.

In the annular space left between the face of pulley C and the cone B is a steel band G, Fig. 1542, forming within a fraction a complete circle, and lined inside and out with leather, and this band is brought, by alternately expanding and contracting it, into contact with either the bore of the largest cone step of B or with the outside face of pulley C. The ends of this band are pivoted upon two pins F, which are fast in two arms E and D, in Fig.

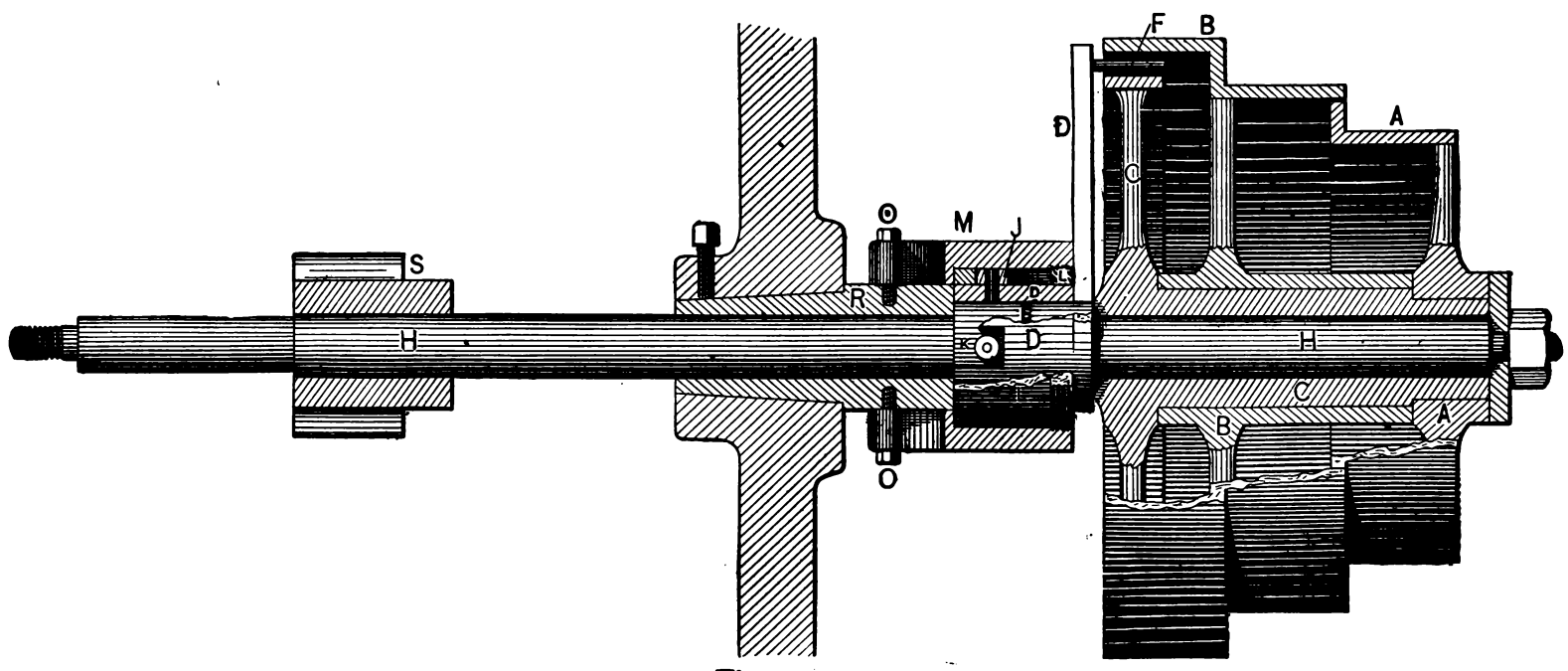

Fig. 1541.

1542. Arm E is fastened to the driving shaft H, and its hub has

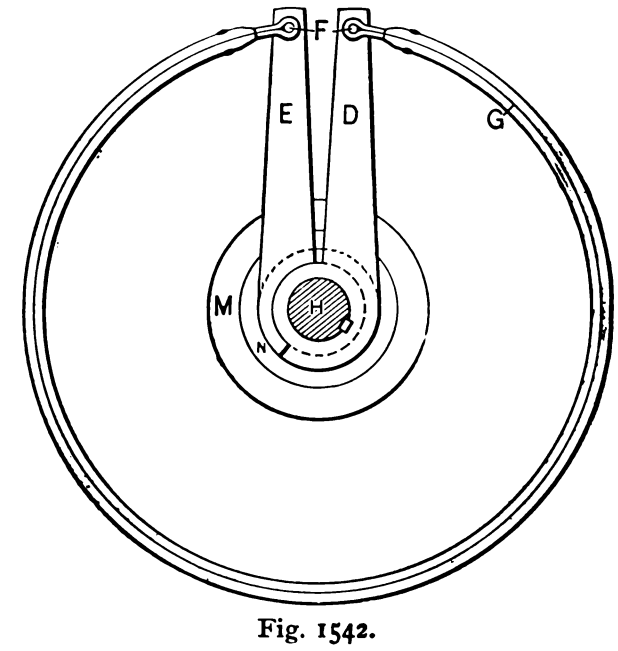

Fig. 1542.

two roller studs K, Fig. 1541, these being diametrically opposite on the said hub. The hub of arm D is a working fit upon the hub

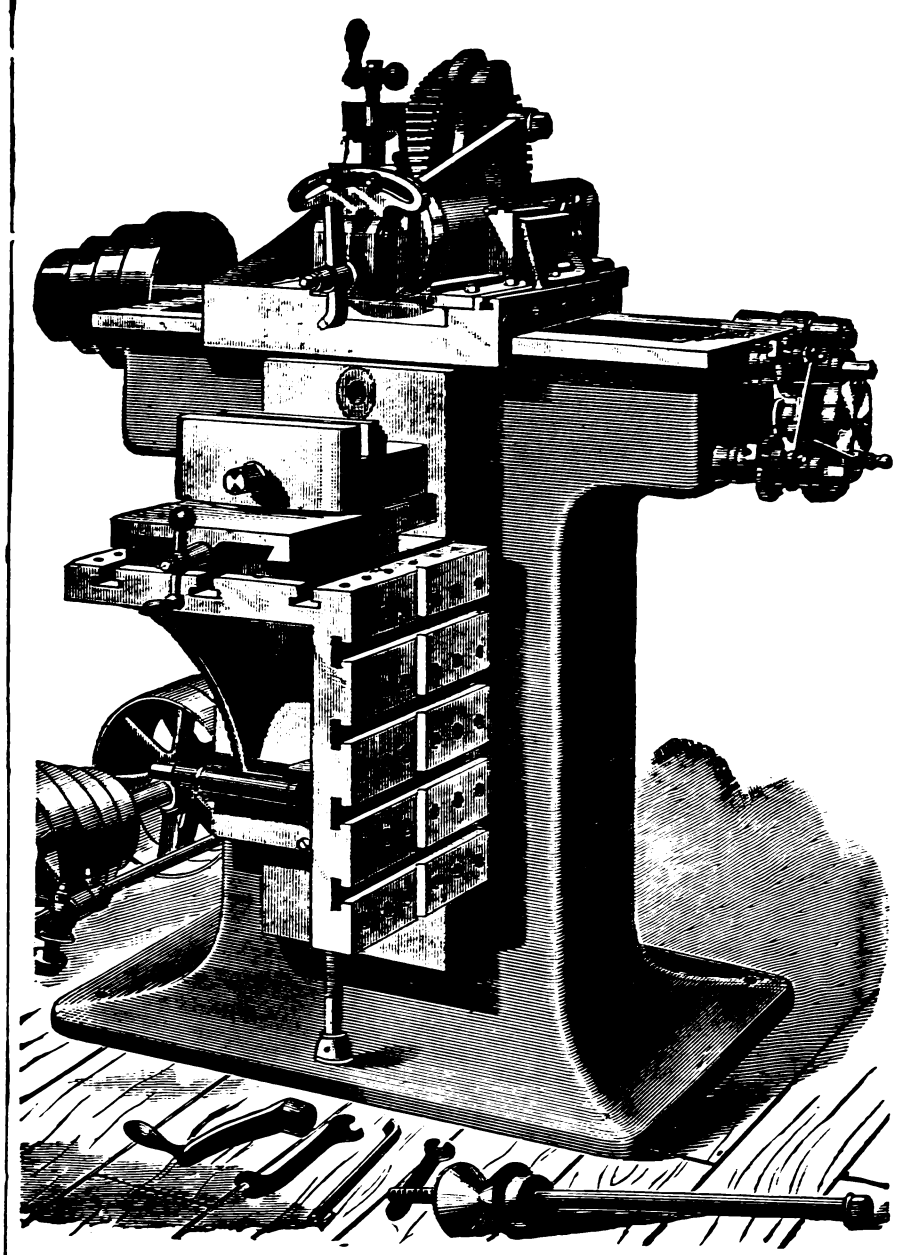

Fig. 1536.

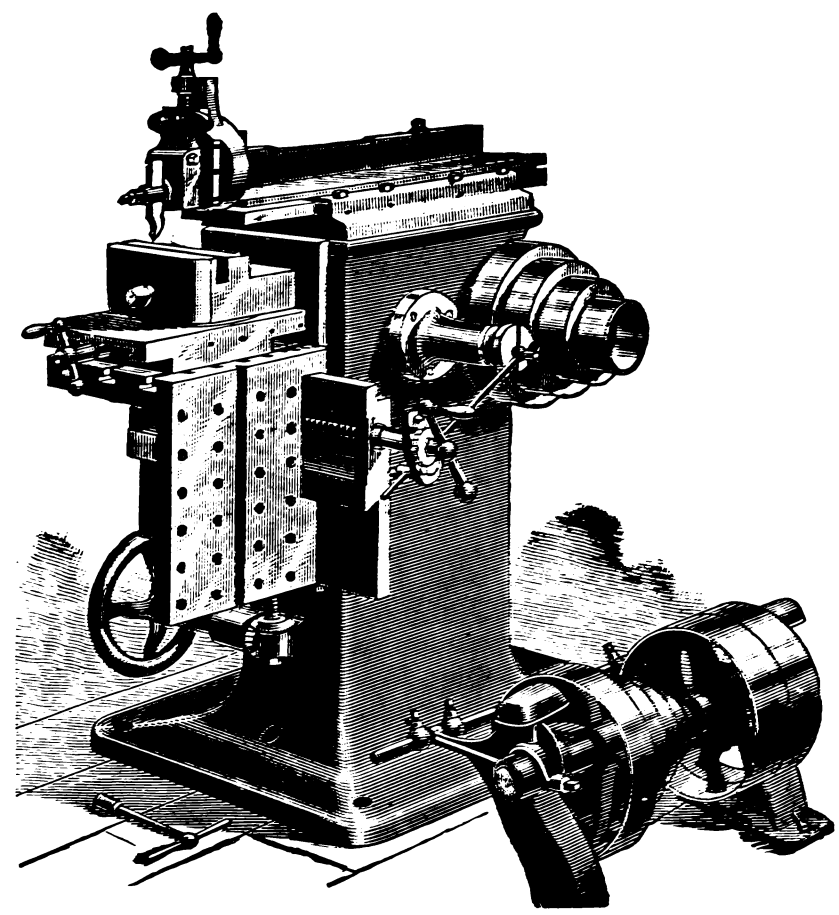

Fig. 1537.

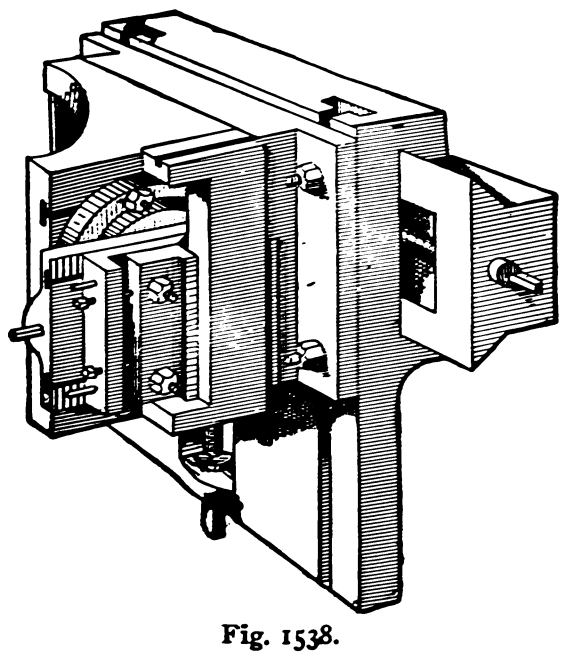

Fig. 1538.

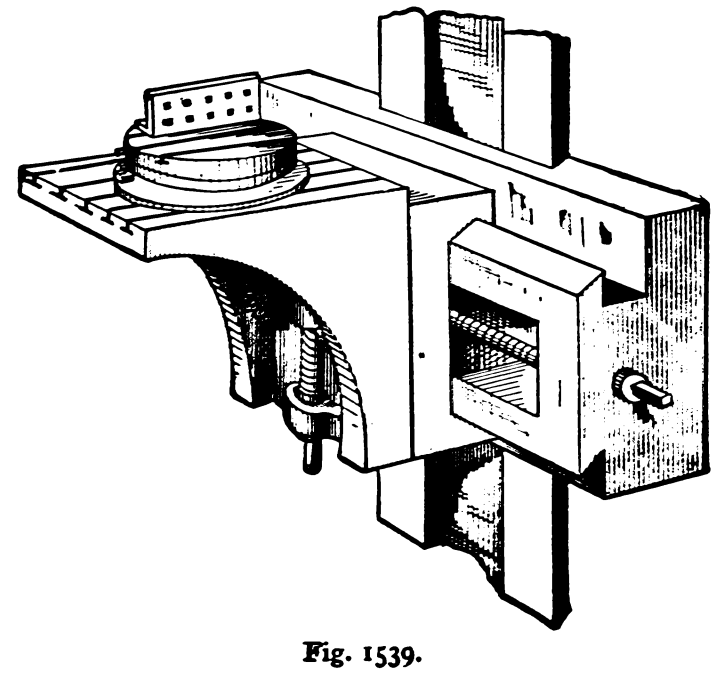

Fig. 1539.

of E, and has two slots to admit the above rollers. Hub D is also provided with two studs and rollers placed midway between the studs K. These latter rollers project into the spiral slots K′ of the ring in Fig. 1543, this ring enveloping the hub of D and being enveloped by the sleeve M, which contains two spiral grooves diametrically opposite, and lying in an opposite direction to grooves K′, Fig. 1543. Sleeve M is prevented from revolving by rollers on the studs O, which are screwed into the bearing bush R, and carry rollers projecting into the slots in M.

It is evident that if the ring L, Fig. 1543, is moved endways

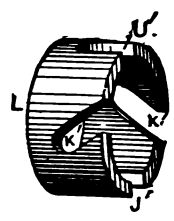

Fig. 1543.

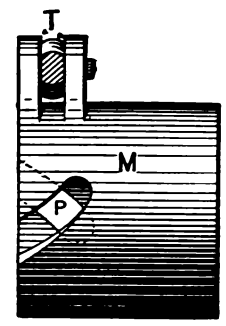

Fig. 1544.

with M, then the arms E, D, together with the band G, will be expanded or contracted according to the direction of motion of the ring, because the motion of M, by means of its spiral grooves, gives a certain amount of rotary motion to the ring L, and the spiral grooves in the ring give a certain amount of rotary motion to the arms D and E, Fig. 1542. When this rotary motion is in one direction the band is expanded; while when it is reversed it is contracted, and the direction of motion of shaft H is reversed.

The outer sleeve M carries the rod T, Figs. 1544 and 1545, which is connected to the lever U, the upper arm of which is

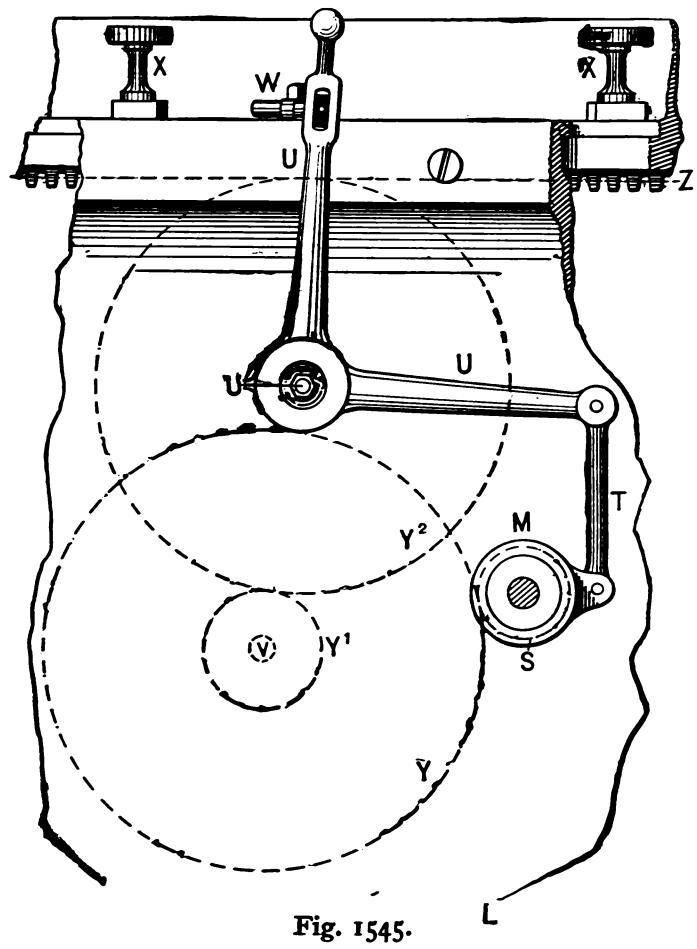

Fig. 1545.

operated by the tappets or dogs X on the ram or sliding bar, and it is obvious that when U is vibrated sleeve M is operated in a corresponding direction, and the ring L also is moved endwise in a corresponding direction, actuating the band as before described, the direction of motion being governed, therefore, by the direction in which U is moved by the tappets or dogs. A certain degree of friction is opposed to the motion of lever U in order to keep it steady, the construction being shown in Fig. 1546, where it is seen that there is on each side of its nut a leather washer, giving a certain amount of elasticity to the pressure of the nut holding it in place on the shaft U.

The mechanism for actuating the feed at the end of the return stroke only, is shown in Fig. 1547. The shaft V (which is also seen in a dotted circle in Fig. 1545) carries a flange *c*, on each side of which is a leather disk, so that the pressure of the bolts which secure *b* to the sleeve *a* causes *c* to revolve under friction, unless sleeve *a*, slotted bar *b*, and flange *c* all revolve together, or,

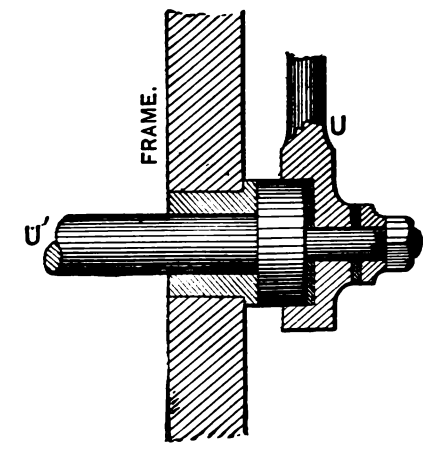

Fig. 1546.

in other words, *c* revolves under friction when it revolves within *a b*.

Fig. 1548 is an end view of Fig. 1547.

Fig. 1549 gives a cross-sectional view of the shaft sleeve, &c. The sleeve *a* is provided with two pins *i*, *i*, and a pin *k* is fast in the frame of the machine, and it is seen that *a* and V may revolve together in either direction until such time as one of the pins *i* meets the stationary pin *k*, whereupon the further revolving of *a*

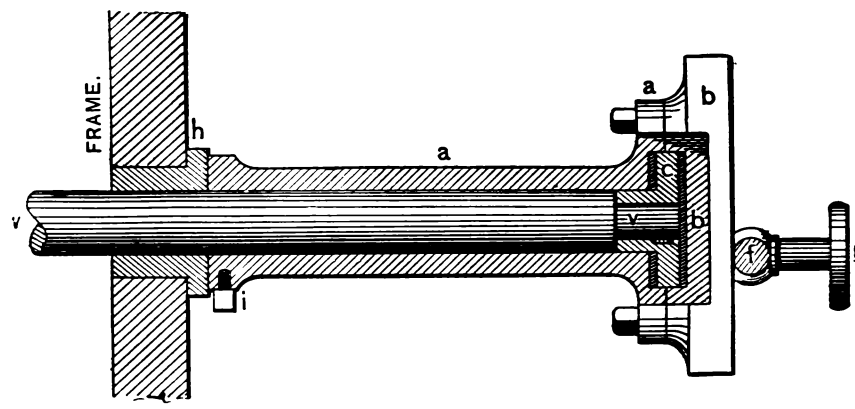

Fig. 1547.

will be arrested and V will revolve within *a*, and as flange *c*, Fig. 1547, revolves with V, it will do so under the friction of the leather washers. The pins *i* and the pin *k* are so located that *a* can have motion only when the ram or sliding-bar is at the end of the return stroke, and the feed-rod *f*, being connected to *b*, is therefore actuated at the same time.

Among the various mechanisms employed to give a quick return to the tool-carrying slide of shaping machines, those most

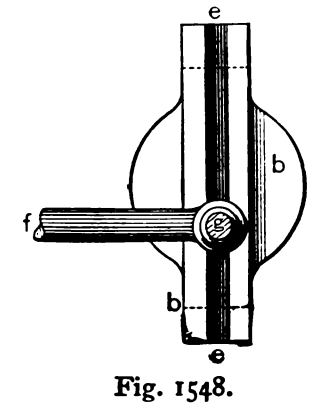

Fig. 1548.

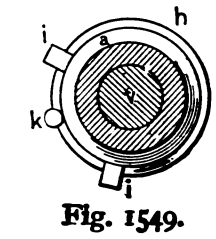

Fig. 1549.

frequently employed are a simple crank, a vibrating link, and the Whitworth quick-return motion, the latter being the most general one.

The principle of action when a vibrating link is employed may be understood from Fig. 1550, in which P is a pinion driven by the cone pulley and imparting motion to D. At L is a link pivoted at C. At A is a link block or die capable of sliding in the slot or opening in the link and a working fit upon a pin which is fast in

the wheel D. As D rotates the link block slides in the slot and the link is caused to travel as denoted by the dotted lines. R is a rod connecting the tool-carrying slide S to the upper end of link

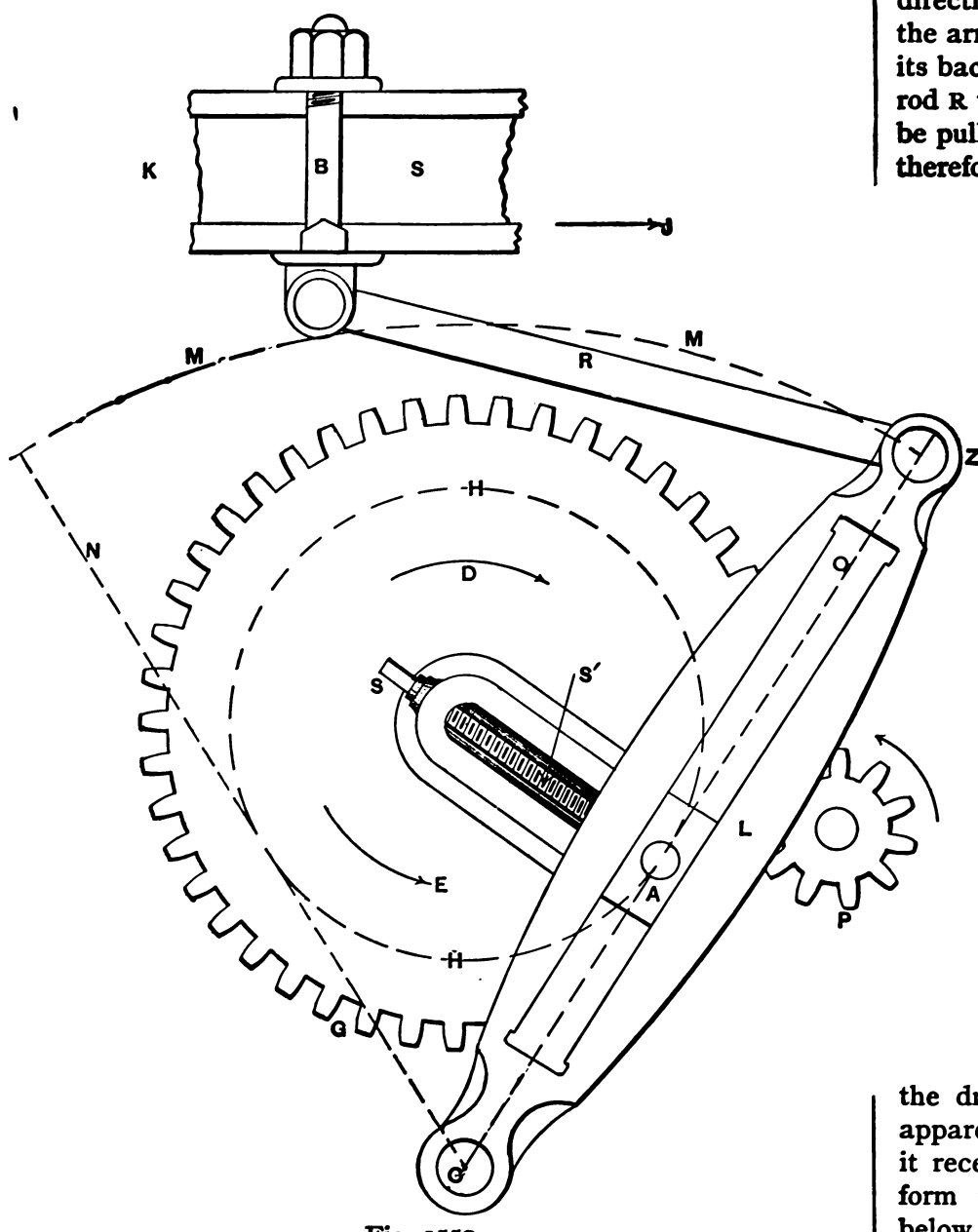

Fig. 1550.

L, and therefore causing it to reciprocate with L. But S being guided by its slide in the guideway traverses in a straight line.

Since the rotation of P and D is uniform, the vibrations of the link L will vary in velocity, because while the link block is working in the lower half of the link slot it will be nearer to the centre of motion C of the link, and the upper end of C will move proportionately faster. The arrangement is such that during this time the tool-carrying slide is moved on its return stroke, the cutting stroke being made while the link block is traversing the upper half of the slot, or in other words, during the period in which the crank pin in A is above the horizontal centre of wheel D.

Now suppose the arrangement of the parts is such that the front of the machine or the cutting tool end of the slide is at the end K of S, then S will be pushed to its cut by the rod R at an angle which will tend to lift S in the slideways. But suppose the direction of rotation of wheel D instead of being as denoted by the arrow at D be as denoted by the arrow at E, then S will be on its back stroke, the front of the machine being at J. In this case rod R will pull S to the cut, and S will, from the angularity of R, be pulled down upon the bed of the slideway guiding it, and will therefore be more rigidly held and less subject to spring, because the tendency to lift is resisted on one side by the adjustable gib only, and on the other by the projecting V, whereas the tendency to be pulled downwards is resisted by the strength of the frame of the machine.

Furthermore, as the pressure on the cutting tool is below the level of the tool-carrying slide it tends to force that slide down upon the slideway, and it will therefore be more rigidly and steadily guided when the force moving the slide and the tool pressure both act in the same direction.

To vary the length of stroke of S pin A is so attached to wheel D that it may be adjusted in its distance from the centre of D.

The Whitworth quick-return motion is represented in Fig. 1551. At P is the pinion receiving motion from the cone pulley or driving pulley of the machine and imparting motion to the gear-wheel G, whose bearing is denoted by the dotted circle B. Through B passes a shaft C, which is eccentric to B and carries at its end a piece A in which is a slot to receive the pin X, which drives rod R whose end Z is attached to the ram of the machine. At D is a pin fast in gear-wheel G and passing into a slot in A.

Taking the position the parts occupy in the figures, and it is seen that the axis of B is the centre of motion of G and is the fulcrum from which the pin D is driven, the power being delivered at X. The path of motion of the driving pin D is denoted by the dotted circle H', and it is apparent that as it moves from the position shown in the figure it recedes from the axis of C, and as the motion of G is uniform in velocity therefore D will move A faster while moving below the line M than it will while moving above it, thus giving a quick return, because the cutting stroke of the ram occurs while D is above the line M and the return stroke occurs while D is below M.

In some constructions the pin X and pin D work in opposite ends of the piece A, as shown in Fig. 1552. This, however, is an undesirable construction because the shaft C becomes the fulcrum,

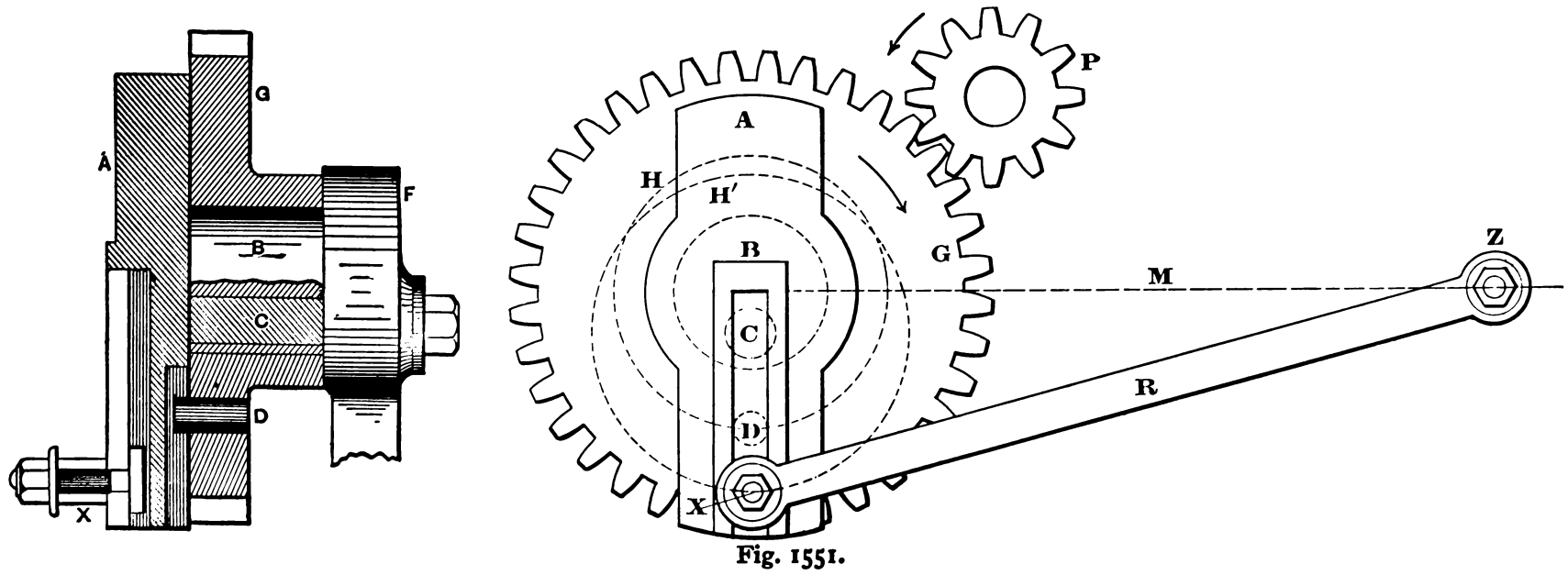

Fig. 1551.

and as the power and resistance are on opposite ends of the lever A, the wheel G is therefore forced against its bearing, and this induces unnecessary friction and wear.

We may now consider the tool motion given by other kinds of slide operating mechanism.

In Fig. 1553 is a diagram of the tool motion given when the slide is operated by a simple crank C, the thickened line R

representing the rod actuating the slide and line on the line of motion of the cutting tool. The circle H denotes the path of revolution of the crank pin, and the black dots 1, 2, 3, 4, &c., equidistant positions of the crank pin.

Line *m* represents the path of motion of the cutting tool.

If a pair of compasses be set to the full length of the thick line

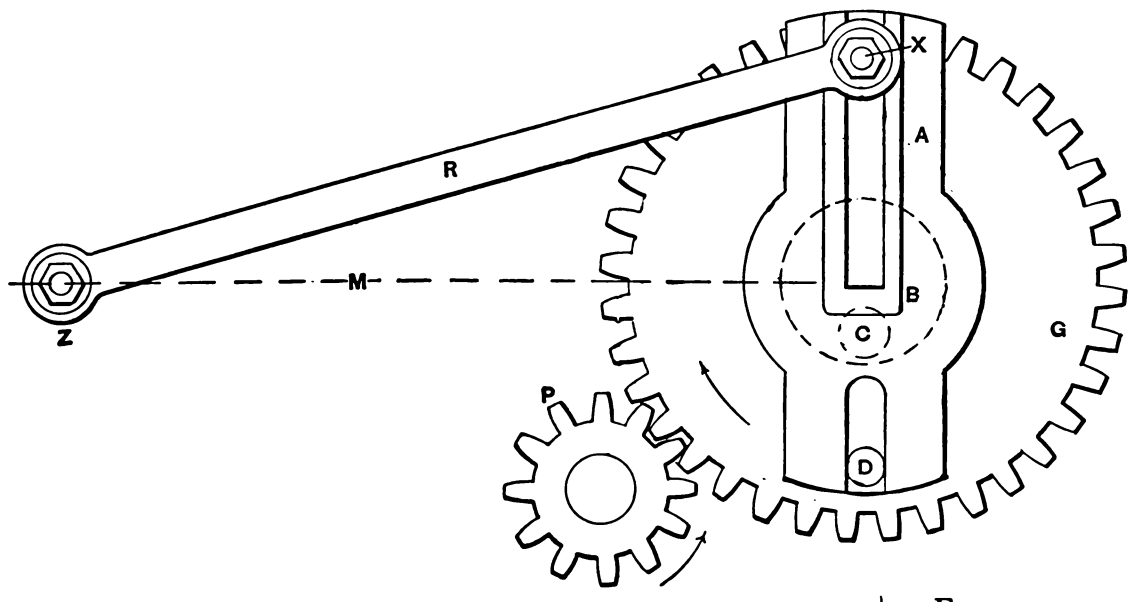

Fig. 1552.

R, that is from the centre of the crank pin to end B of line R, and these compasses be then applied to the centre of crank pin position 1, and to the line *m*, they will meet *m* at a point denoted by line *a*, which will, therefore, represent the position of the tool point when the crank pin was in position 1. To find how far the tool point is moved while the crank pin moves from position 1 to position 2, we place the compass point on the centre of crank pin position 2 and mark line *b*. For crank position 3 we have by the same process line *c*, and so on, the twelve lines from *a* to *l* representing crank positions from 1 to 12.

Now let it be noted that since the path of the crank pin is a circle, the tool point will on the backward stroke occupy the same position when the crank pin is at corresponding positions on the forward and backward strokes. For example, when the crank pin is in position 7 the tool point will be at point *g* on the forward stroke, and when the crank pin is in position 17 the tool will be at point *g* on the backward stroke, as will be found by trial with the compasses; and it follows that the lines *a*, *b*, *c*, &c., for the forward stroke will also serve for the backward one, which enables us to keep the engraving clear, by marking the first seven positions on one side of line *m*, and the remaining five on the other side of *m*, as has been done in the figure.

Obviously the distances apart of the lines *a*, *b*, *c*, *d*, &c., repre-

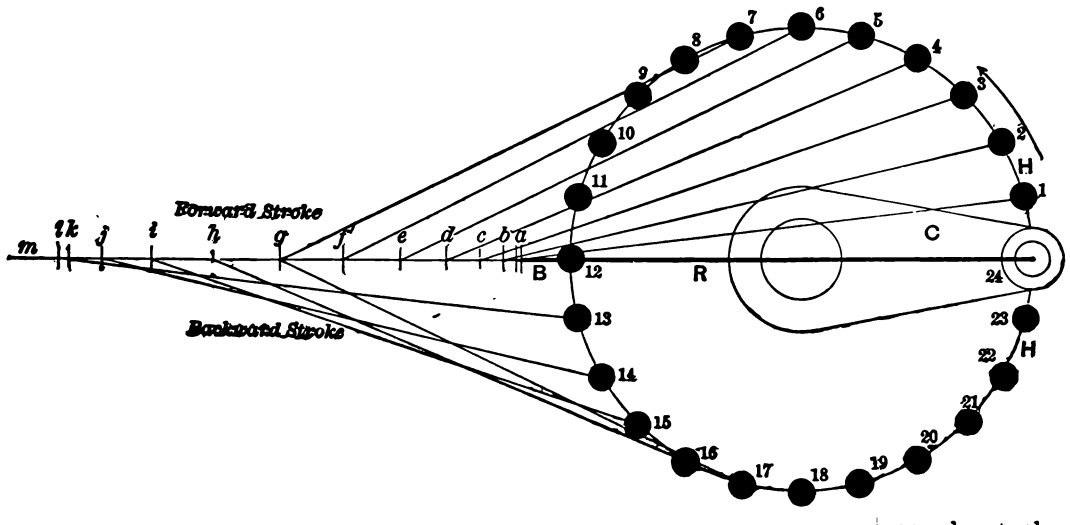

Fig. 1553.

sent the amount of tool motion during equal periods of time, because the motion of the crank pin being uniform it will move from position 1 to position 2 in the same time as it moves from position 2 to position 3, and it follows that the cutting speed of the tool varies at every instant in its path across the work, and also that since the crank pin operates during a full one-half of its revolution to push the tool forward, and during a full one-half to pull it backward, therefore the speed of the two strokes are equal.

We may now plot out the motion of the link quick return that was shown in Fig. 1550, the dotted circle H′, in Fig. 1554, representing the path of the pin A, and the arc H representing the line of motion of the upper end of link L, and lines N, O, its centre line at the extreme ends of its vibrating motion. In Fig. 1554 the letters of reference refer to the same parts as those in Fig. 1550. We divide the circle H′ of pin motion into twenty-four equidistant parts marked by dots, and through these we draw lines radiating from centre C and cutting arc H, obtaining on the arc H the various positions for end Z of rod R, these positions being marked respectively 1, 2, 3, 4, &c., up to 24. With a pair of compasses set to the length of rod R from 1 on H, as a centre, we mark on the line of motion of the slide line *a*, which shows where the other end of the rod R will be (or, in other words, it shows the position of bolt B in Fig. 1550), when the centre of A, Fig. 1550, is in position 1, Fig. 1554.

From 2 on arc H, we mark with the compasses line *b* on line M, showing that while the pin moved from 1 to 2, the rod R would move slide S, Fig. 1550, from *a* to *b*, in Fig. 1554. From 3 we mark *c*, and so on, all these marks being above the horizontal

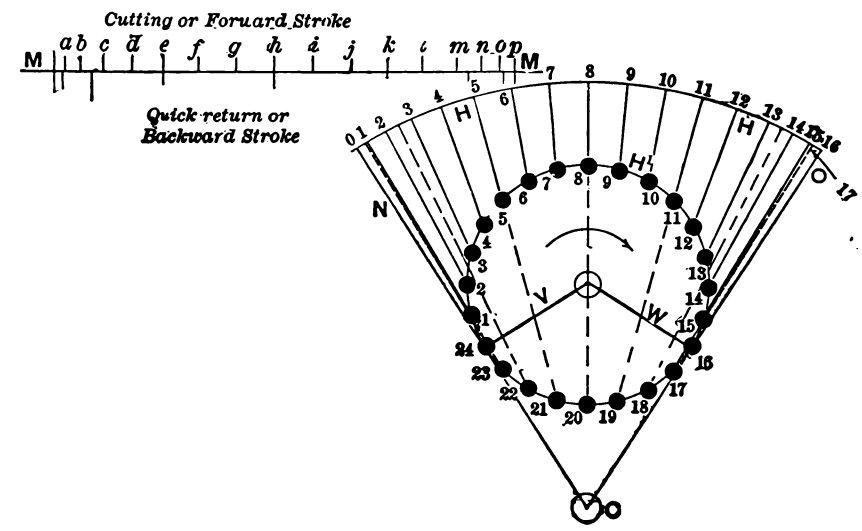

Fig. 1554.

line M, representing the line of motion, and being for the forward stroke. For the backward stroke we draw the dotted line from position 17 up to arc H, and with the compasses at 17 mark a line beneath the line M of motion, pursuing the same course for all the other pin positions, as 18, 19, &c., until the pin arrives again at position 24, and the link at O, and has made a full revolution, and we shall have the motion of the forward stroke above and that of the backward one below the line of motion of the slide.

On comparing this with the crank and with the Whitworth motion hereafter described, we find that the cutting speed is much more uniform than either of them, the irregularity of motion occurring mainly at the two ends of the stroke.

In Fig. 1555 we have the motion of the Whitworth quick return described in Fig. 1551, H′ representing the path of motion of the driving-pin D about the centre of B, and H the path of motion of X about the centre C, these two centres corresponding to the centres of B and C respectively in Fig. 1551. Let the line M correspond to the line of motion M in Fig. 1551. Now, since pin D, Fig. 1551, drives, and since its speed of revolution is uniform, we divide its circle of motion H′ into twenty-four equal divisions, and by drawing lines radiating from centre B, and passing through the lines of division on H′, we get on circle H twenty-four positions for the pin X in Fig. 1551. Then setting the compasses to the

length of the rod R (Fig. 1551), we mark from position 1 on circle H as a centre, line *a*; from position 2 on H we mark line *b*, and so on for the whole twenty-four positions on circle H, obtaining from *a* to *n* for the forward, and from *n* to *y* for the motion during the backward stroke. Suppose, now, that the mechanism remaining precisely the same as before, the line M of motion be in a line with the centres C, B, instead of at a right angle to it, as it is in Fig. 1551, and the motion under this new condition will be as in

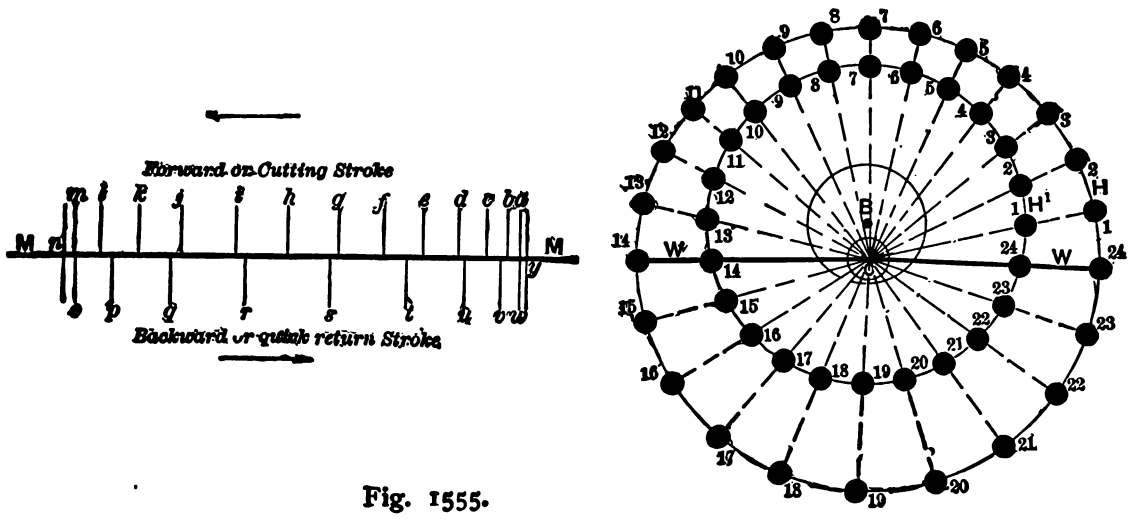

Fig. 1555.

Fig. 1556, the process for finding the amount of motion along M from the motion around H being precisely as before.

Plates LXXI. and LXXII. represent the Hendry Machine Company's shaper, which is driven by friction:

A and B are loose pulleys on a hollow shaft D, and running in opposite directions by means of open and cross belts. Shaft D drives, through suitable gearing, the spur gear W, which engages with the rack R.

Shaft D is hollow, and motion is imparted to it by means of an internal clutch C, which engages first one pulley and then the other. Said clutch C drives the shaft D by means of a feather or key which is let into the shaft, and clutch C slides on this key. E shows this feather.

F is a pin passing through the hub of clutch C, and rod G, and a slot in shaft D allows the pin F to be moved endwise to engage the clutch C in the pulleys A and B. H is the reversing lever and has a fork on the end, which is held between the collars on rod G, and when the forked lever is moved it carries the rod G endwise, and this in turn moves the clutch C into either one pulley or the other, thereby imparting motion to the shaft in either direction. L is a lever fast to upper end of forked lever H. K, K, are the reversing dogs on top of cutter bar for regulating the length of stroke desired and reversing the motion of the machine. M, M, are the binder handles to clamp the dogs in place. I and J act as a spring lock, so arranged as to hold the clutch C to its work while running. P and Q are bearings to support and carry the driving shaft D.

From the foregoing explanation the working of the machine can be very readily understood. The pulleys are put in motion by the open and cross belts, which in turn revolve the shaft D, imparting motion to the train of gearing through pinion O, which in turn again carry the cutter bar forward by means of the two racks on the cutter bar, which engage the train of gearing. The cutter bar moves forward until one or other of the dogs K, K, strikes the lever L. This lever, being fastened to the forked lever H, drives the rod G with its clutch C forward until the clutch engages with the pulley, which at once reverses the motion of the driving shaft with its train of gearing, and carrying the cutter bar in the opposite direction until it strikes the other dog, and again reversing the motion of shaft and gearing, etc. In order to change the length of the stroke the reversing dogs are moved on the cutter bar, either closer together, or further apart, as the case may be, and either shorten or lengthen the stroke from nothing to the full length of stroke of the machine. The advantages of this motion are that it is perfectly uniform in speed throughout the entire length of the stroke, and regardless of the length of the stroke of the cutter bar.

The reversing is also instantaneous, and the tool will work close up to a line.

The iron planing machine, or iron planer as it is termed in the United States, is employed to plane such surfaces as may be operated upon by traversing a work table back and forth in a straight line beneath the cutting tool. It consists essentially of a frame or bed A, Fig. 1557, provided on its upper surface with guideways, on which a work carrying table T may be moved by suitable mechanism back and forth in a straight line.

This frame or bed carries two upright frames or stanchions B, which support a cross-bar or slide C, to which is fitted a head which carries the cutting tool.

To enable the setting of the tool at such a height from the table as the height of the work may require, the cross slide C may be raised higher upon the uprights B by means of the bevel gears F, G, H, and T, the latter being on a shaft at the top of the machine, and operating the former, which are on vertical screws N, which pass down through nuts that are fast upon the cross slide C.

To secure C at its adjusted height, the uprights are provided with T-shaped slots H, H, and bolts pass through C, their heads being in the T-grooves, and their nuts exposed so that a wrench may be applied to them.

The faces of the cross slide C are parallel one to the other, and stand at a right angle to the V-guideways on which the work table (or platen, as it is sometimes termed) slides; hence the cross slide will, if the table is planed true or parallel with this cross slide, be parallel with the table at whatever height above the table it is set, providing that the elevating screws, when operated, lift each end of C equally.

The construction of the head D corresponds to that of the head shown in Figs. 1497 and 1498 for a shaper, except that in this case the swivel head is secured to a saddle that slides along C, being provided with a nut operated by a feed screw J, which moves D along C.

The mechanism for operating the work table or platen T is as follows:—P P′ are two loose pulleys, and P″ is a driving pulley fast on the same shaft. This shaft drives, within the casing at Q, a worm operating a worm-wheel, which actuates inside the frame A and beneath the work table a train of gears, the last of which gears with a rack, provided on the underneath side of the table.

The revolutions of this last wheel obviously cause the work table to slide back and forth while resting on the V-guideways provided

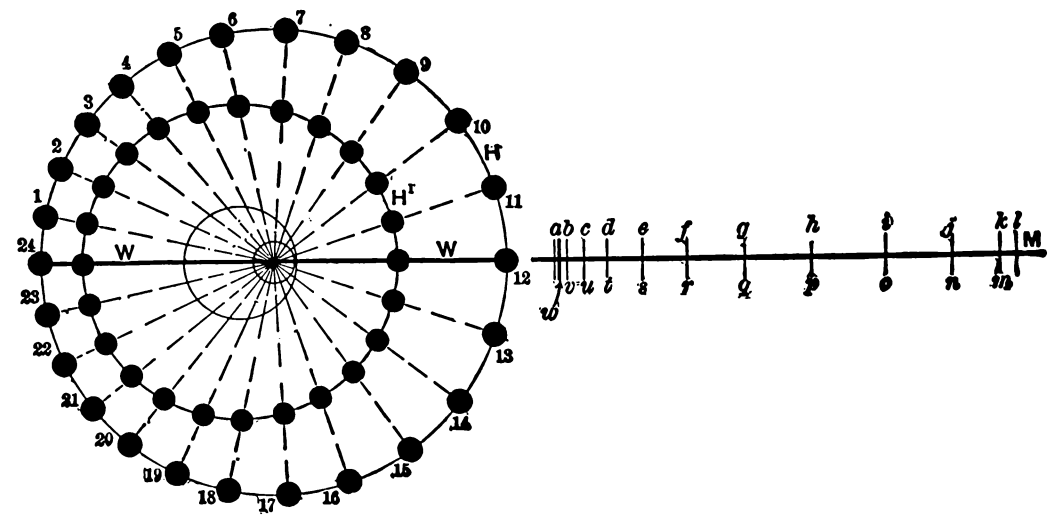

Fig. 1556.

on top of the frame A, the direction of table motion being governed by the direction in which the driving pulley P″ revolves.

This direction is periodically reversed as follows:—The pulley P is driven by a crossed belt, while pulley P′ is driven by an open or uncrossed one; hence the direction of revolution of the driving pulley P″ will be in one direction if the belt is moved from P to P″, and in the other if the belt is moved from P′ to P″. Mechanism is provided whereby first one and then the other of these belts is

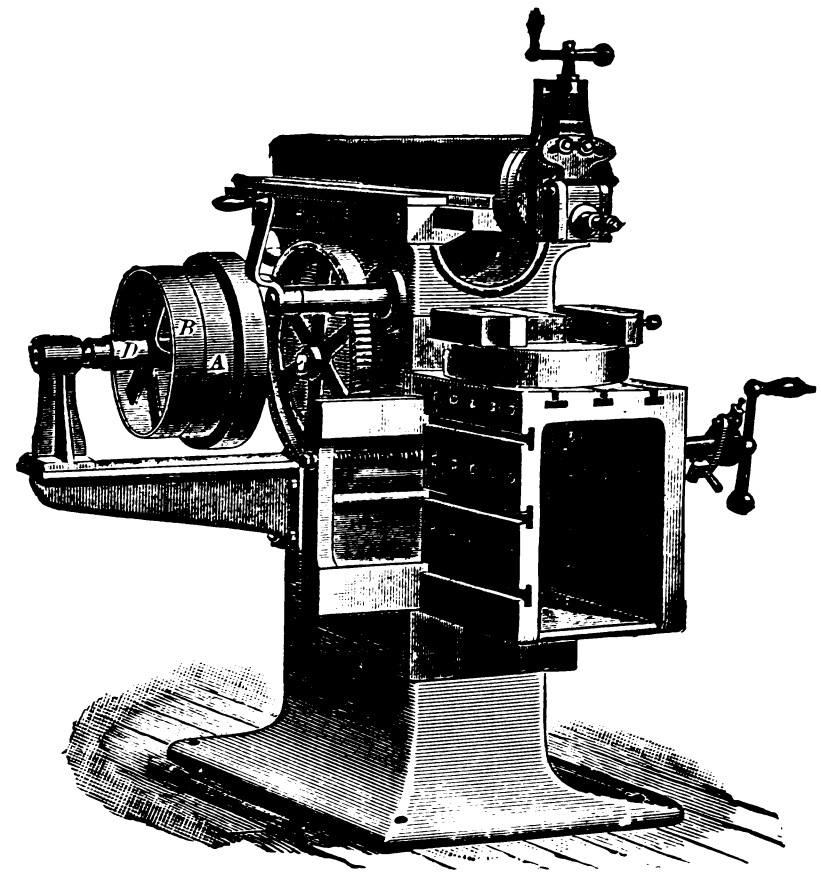

Fig. 1.

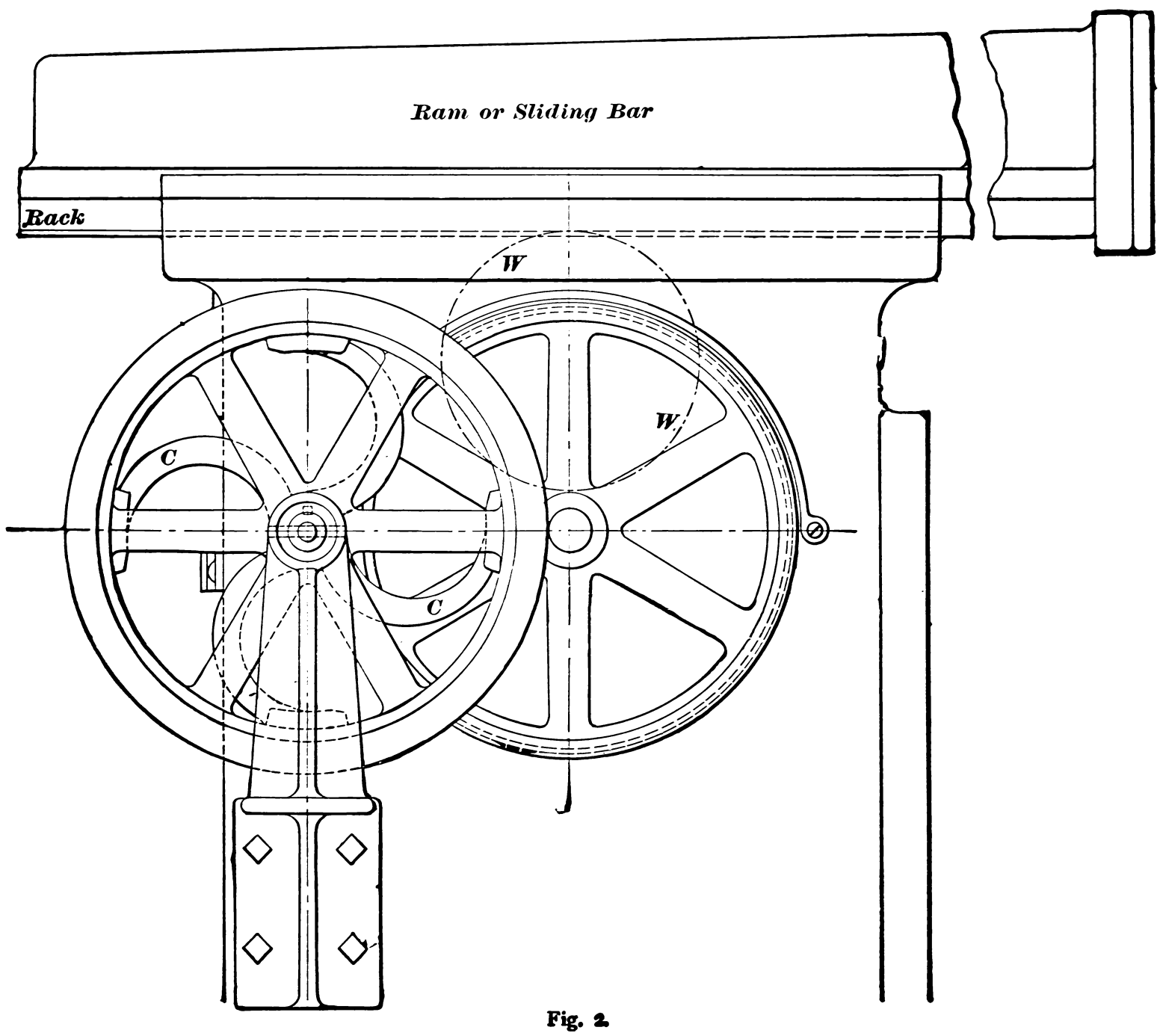

Fig. 2.

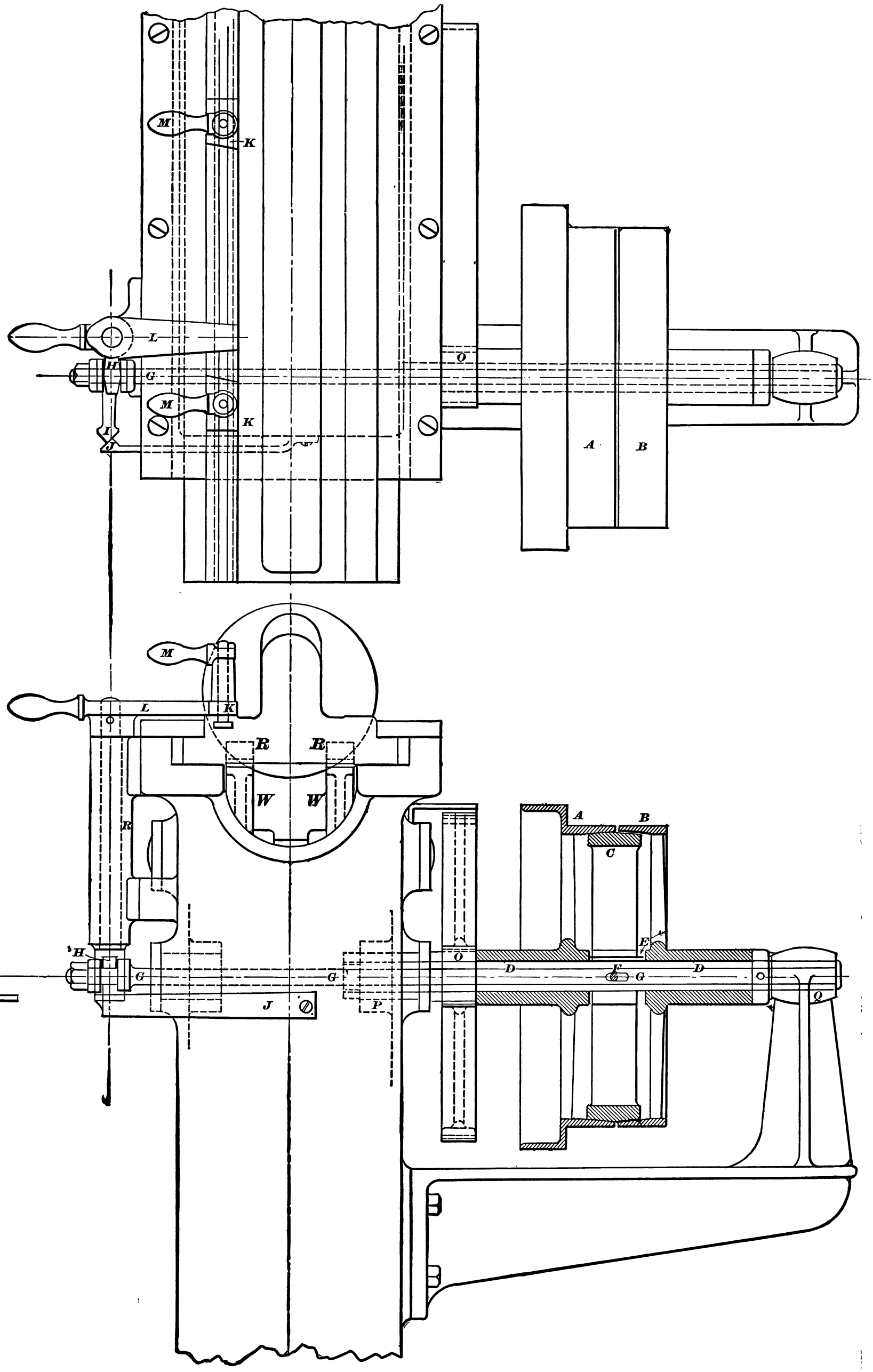
M
K
L
H
G
M
K
I
J
O
A
B
M
L
K
R
R
W
W
R
H
H
G
G
J
P
O
D
F
G
D
A
B
C
E
Q

moved so as to pass over upon P″ and drive it, the construction being as follows :—

To the edge of the work table there is fixed a stop R, which as

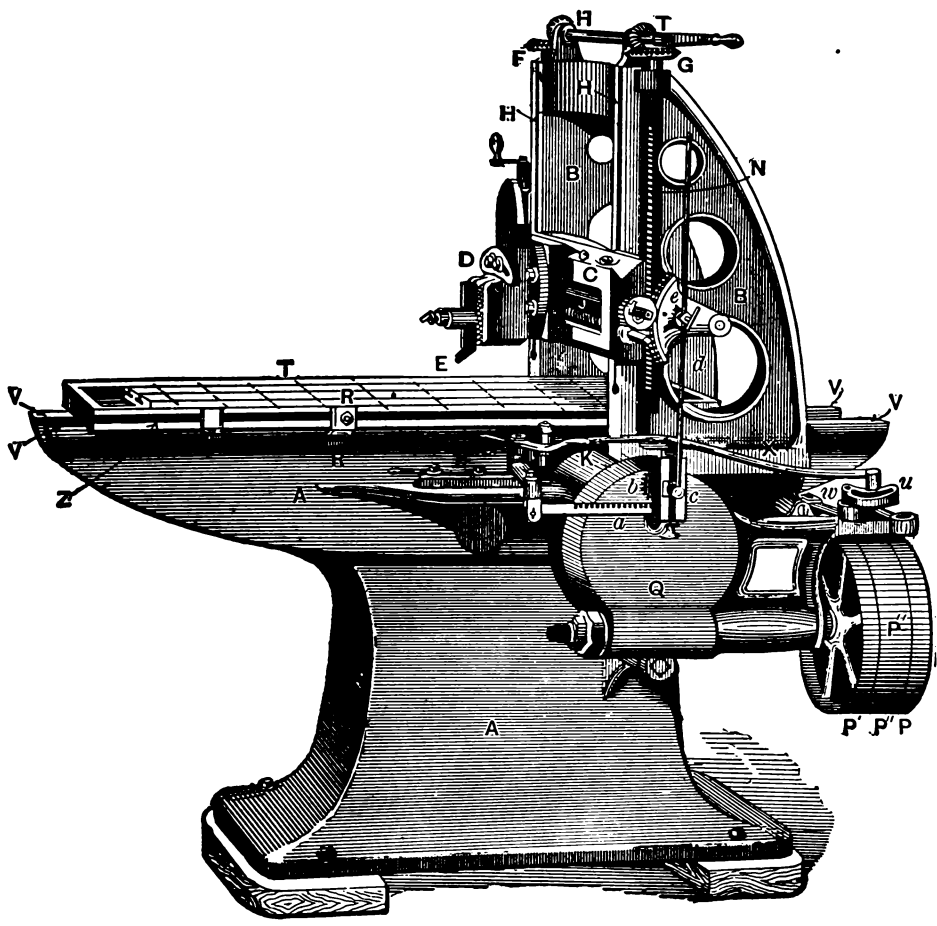

Fig. 1557.

the table traverses to the right meets and moves a lever arm S, which through the medium of a second lever operates the rod X, which operates a lever *u*, which has a slot through which one of the driving belts passes. The lever *u* operates a second lever *w* on the other side of the pulleys, and this lever also has a slot through which the other driving belt passes.

When the stop R moves the lever arm S, levers *u* and *w* therefore move their respective belts, one moving from the tight pulley P′ to a loose one as P, and the other moving its belt from the loose pulley as P′ to the tight one P″, and as the directions of belt motions are opposite, the direction of revolution of P″ is reversed by the change of belt operating it. There are two of the stops R, one on each side of the lever S ; hence one of these stops moves the lever S from left to right and the other from right to left.

Suppose, then, that the table is moving from right to left, which is its cutting stroke, and the driving belt will be on the pulley P″ while the other belt will be on pulley P. Then as the stop R moves S and operates X the arm *u* will move its belt from P″ to P′, and arm *w* will move its belt from P to P″, reversing the direction of motion of P″, and therefore causing the table T to move from left to right, which it will continue to do until the other stop corresponding to R meets S and moves it from right to left, when the belts will be shifted back again. The stroke of the table, therefore, is determined by the distance apart of the stops R, and these may be adjusted as follows :—

They are carried by bolts whose heads fit in a dovetail groove Z provided along the edge of the table, and by loosening a set screw may therefore be moved to any required location along the bed.

To give the table a quick return so that less time may be occupied for the non-cutting stroke, all that is necessary is to make the countershaft pulley that operates during the back traverse of larger diameter than that which drives during the cutting traverse of the table.

In order that one belt may have passed completely off the driving pulley P″ before the other moves on it, the lever motions of *u* and *w* are so arranged that when the belt is moving from P″ to P lever *u* moves in advance of lever *w*, while when the other belt is being moved from P″ to P′ lever *w* moves in advance of lever *u*.

To enable the work table to remain at rest, one driving belt must be upon P and the other upon P′, which is the case when the lever arm S is in mid position, and to enable it to be moved to this position it is provided with a handle K forming part of lever S.

To cause the tool to be fed to its cut before it meets the cut, and

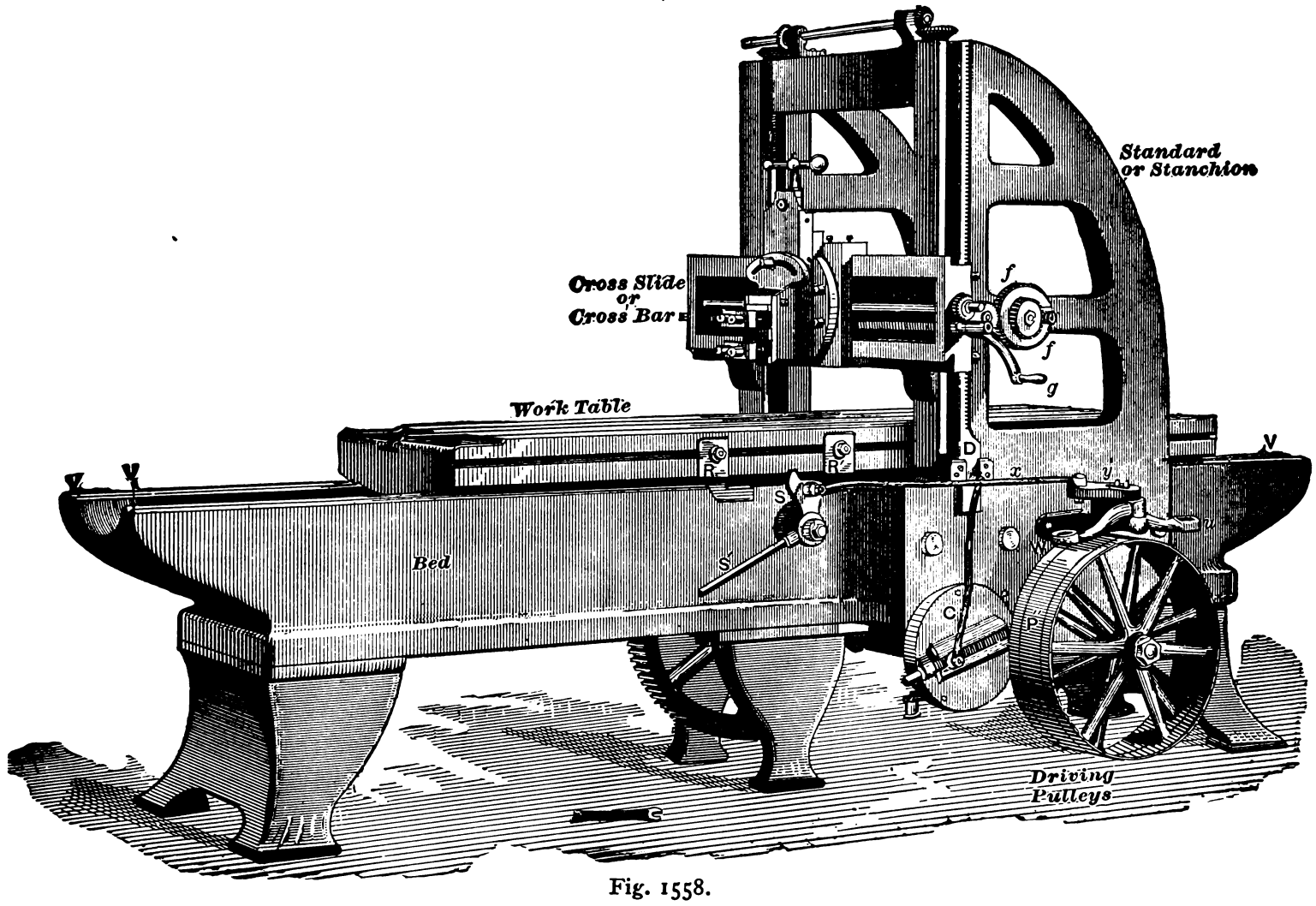

Fig. 1558.

thus prevent it from rubbing against the side of the cut, as was described with reference to Fig. 1503, the feed takes place when the table motion is reversed from the back or return stroke to the cutting or forward stroke by the following mechanism :—

At *a* is a rack that is operated simultaneously with S and by the

same stop R. This rack operates a pinion *b*, which rotates the slotted piece *c*, in which is a block that operates the vertical rod *d*, which is attached to a segmental rack *e*, which in turn operates a

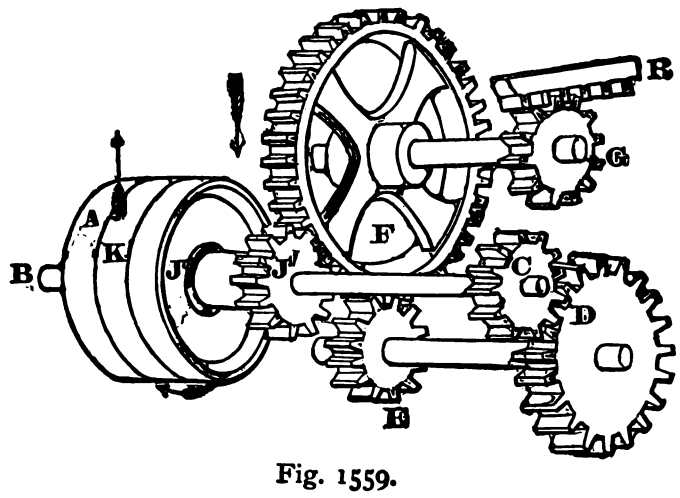

Fig. 1559.

pinion which may be placed either upon the cross-feed screw J, or upon the rod above it ; the latter operates the vertical feed of the tool through mechanism within the head D and not therefore shown in the engraving. Thus the self-acting tool feed may take place vertically or across the work table at will by simply placing the pinion upon the cross-feed screw or upon the feed rod, as the case may be.

Fig. 1558 represents a planer in which the rod *x* is connected direct from S to a pivoted piece *y* in which is a cam-shaped slot through which pass pins from the belt-moving arms *u* and W. The shape of the slot in *y* is such as to move the belt-moving arms one in advance of the other, as described with reference to Fig. 1566.

The feed motions are here operated by a disk C, which is actuated one-half a revolution when the work table is reversed. This disk is provided on its face with a slideway in which is a sliding block that may be moved to or from the centre of C by the screw shown, thus varying at will the amount of stroke imparted to the rod which moves the rack by means of which the feed is actuated through the medium of the gear wheels at *f*. The handle *g* is for operating the feed screw when the self-acting feed is thrown out of operation, which is done by means of a catch corresponding in its action to the catch shown in Fig. 1501. S and S' are in one piece, S' being to move the two driving belts on to the loose pulleys so as to stop the work table from traversing.

Fig. 1559 represents a method employed in some English planing machines to drive the work table and to give it a quick return motion. In this design but one belt is used, being shifted from pulley A, which operates the table for the cutting stroke, to pulley J, which actuates the table for the return stroke. The middle pulley K is loose upon shaft B, as is also pulley J, which is in one piece with pinion J'. Motion from A is conveyed through shaft B

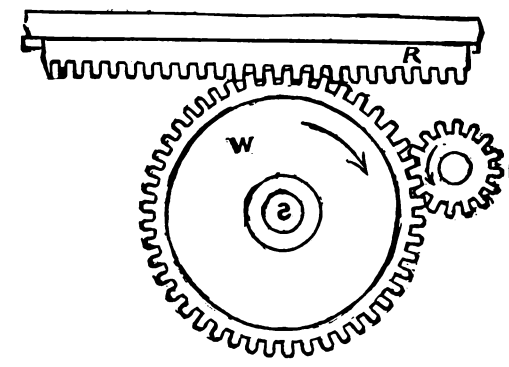

Fig. 1560.

and through gear C, D, E to F, and is reduced by reason of the difference in diameter between D and E, and between F and G.

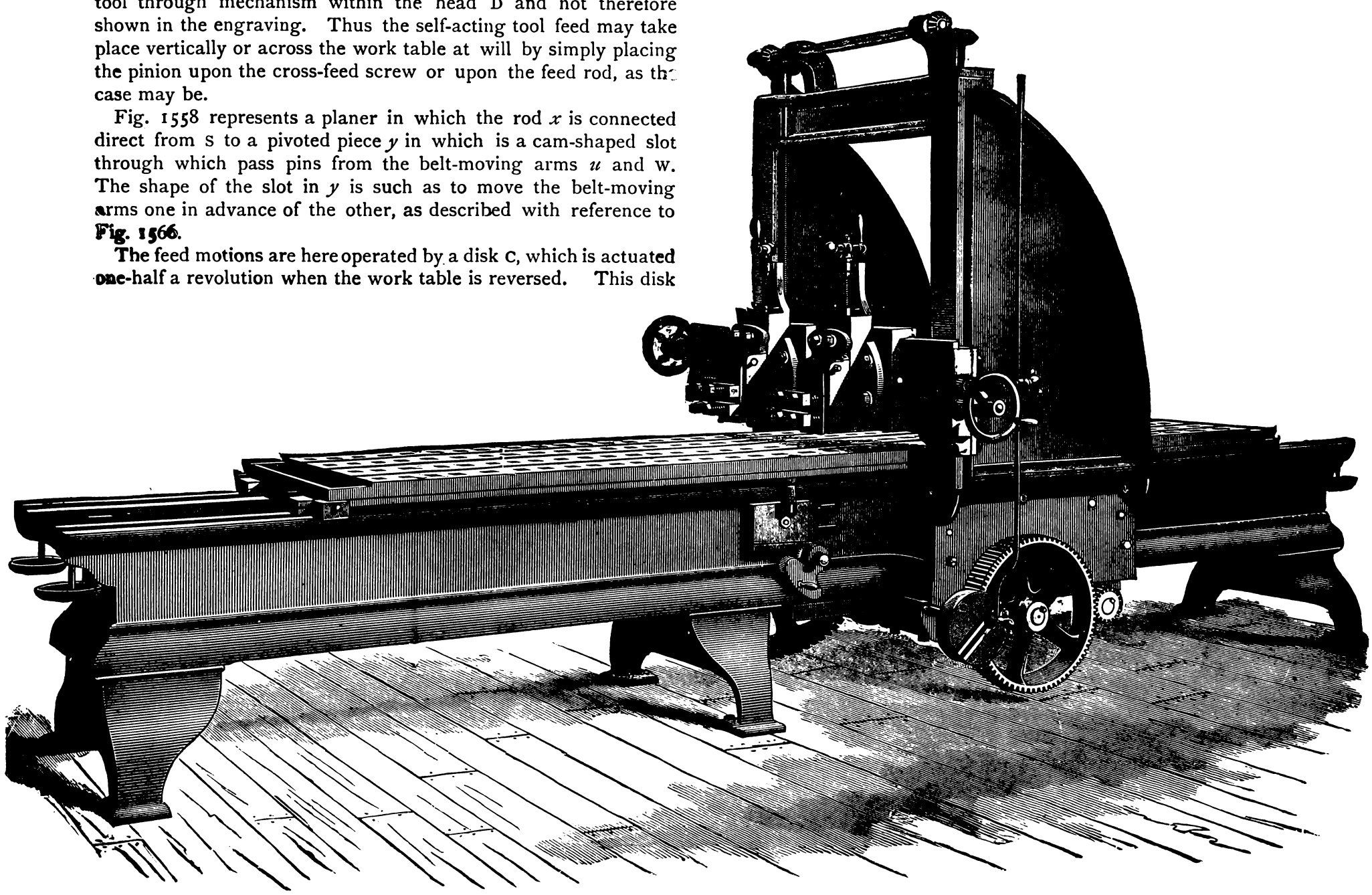

Fig. 1562.

Motion for the quick return passes from J direct to F without being reduced by gears D, E, hence the difference between the cutting speed and the speed of the return stroke is proportionate to the relative diameters of D and E.

In American practice the rack R, Fig. 1559, is driven by a large gear instead of by a pinion, so that the strain on the last driving shaft S, in Fig. 1560, shall be less, and also the wheel less liable to vibration than a pinion would be.

Fig. 1561 represents a planer designed for use in situations where a solid foundation cannot be obtained ; hence the bed is made of unusual depth, to give sufficient strength and make it firm and solid on unstable foundations, such as the floors in the upper

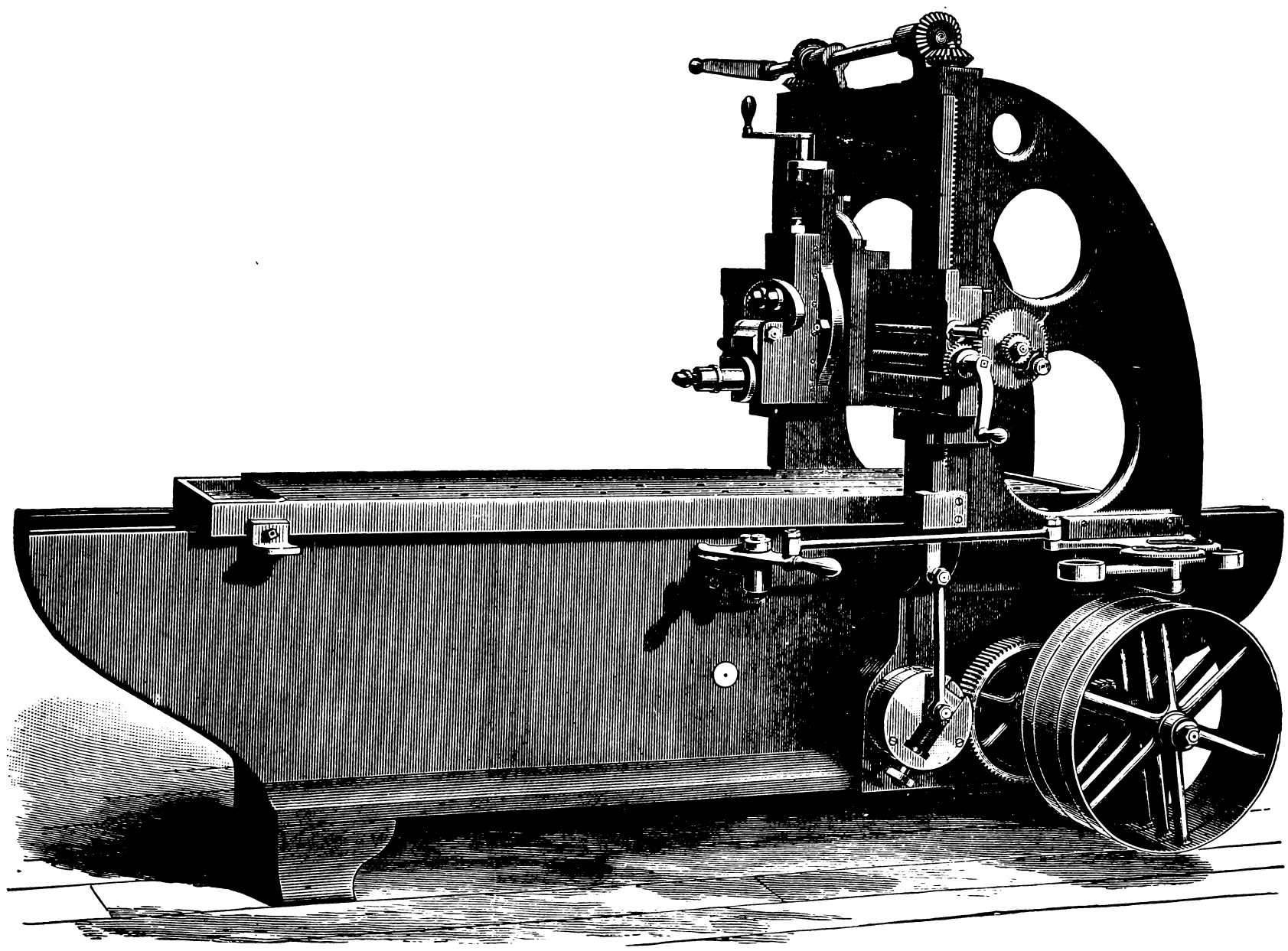

Fig. 1561.

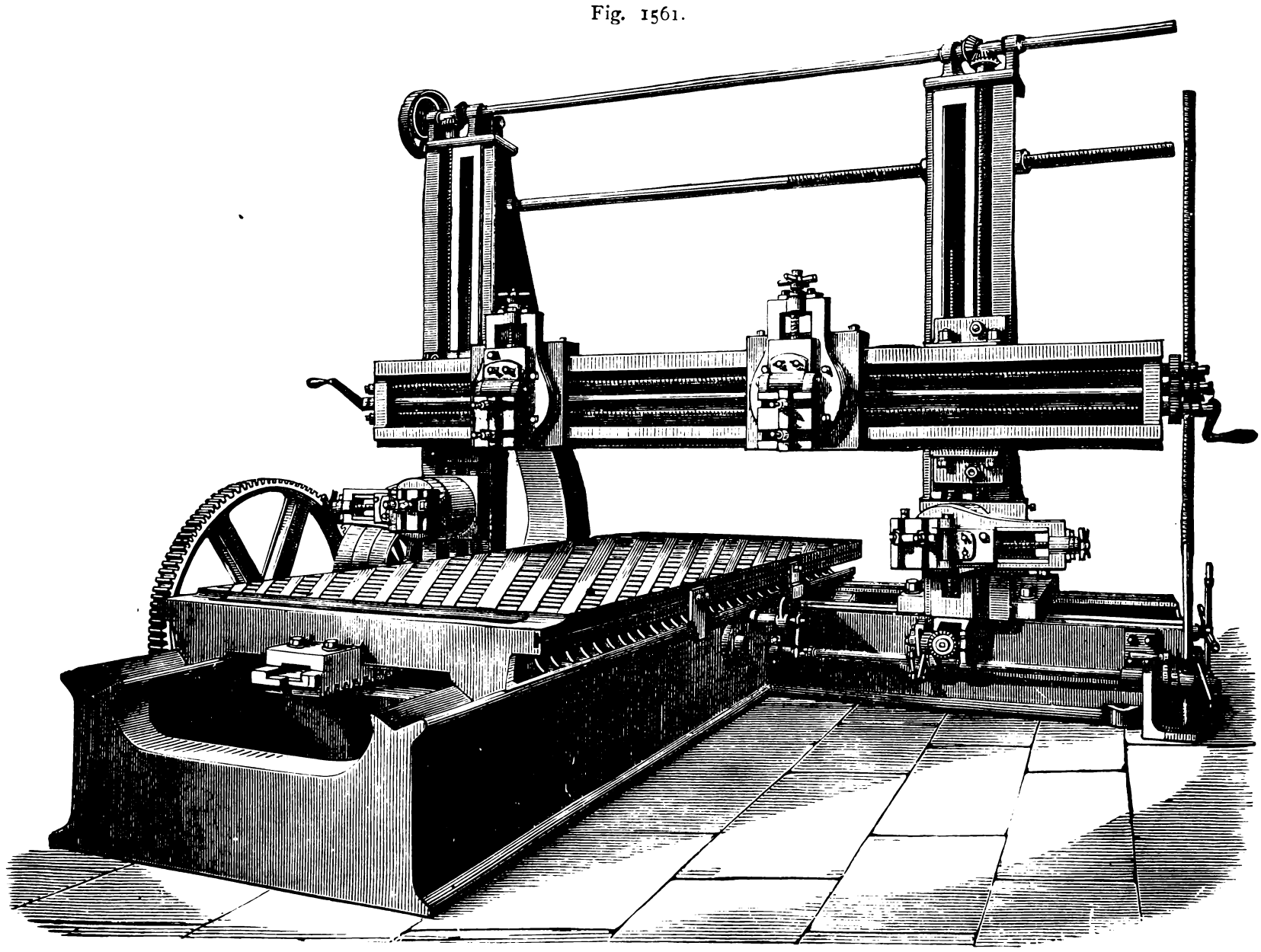

stories of buildings. In all other respects the machine answers to the general features of improved planing machines.

As the sizes of planing machines increase, they are given increased tool-carrying heads; thus, Fig. 1562 represents a class in which two sliding heads are used, so that two cutting tools may operate simultaneously. Each head, however, is capable of independent operation; hence, one tool may be actuated automatically along the cross slide to plane the surfaces of the work, while the other may be used to carry a cut down the sides of the work; or one tool may take the roughing and the other follow with the finishing cut, thus doubling the capacity of the machine.

Fig. 1563 represents a planing machine in which the bed of the machine is L-shaped, the extension being to provide a slide to carry the right-hand standard, and permit of its adjustment at distances varying from the left-hand standard to suit the width of the work. This obviously increases the capacity of the machine, and is a desirable feature in the large planers used upon the large parts of marine engines.

ROTARY PLANING MACHINE.—Fig. 1564 is a rotary planing machine. The tools are here carried on a revolving disk or cutter head, whose spindle bearing is in an upper slide with two inches of motion to move the bearing endways, and thereby adjust the depth of cut by means of a screw. The carriage on which the spindle bearing is mounted is traversed back and forth (by a worm and worm-wheel at the back of the machine) along a horizontal slide, which, having a circular base, may be set either parallel to the fixed work-table or at any required angle thereto.

By traversing the cutter head instead of the work, less floor space is occupied, because the head requires to travel the length of the work only, whereas when the work moves to the cut it is all on one side of the cutter at the beginning of the cut, and all on the other at the end.

The disk of the cutter head is in one piece with the spindle, and carries twenty-four cutters arranged in a circle of thirty-six inches in diameter, each taking its proper share of the cutting duty.

The cutters may be ground while in their places in the head by a suitable emery wheel attachment, or if ground separately they must be very carefully set by a gauge applied to the face of the disk.

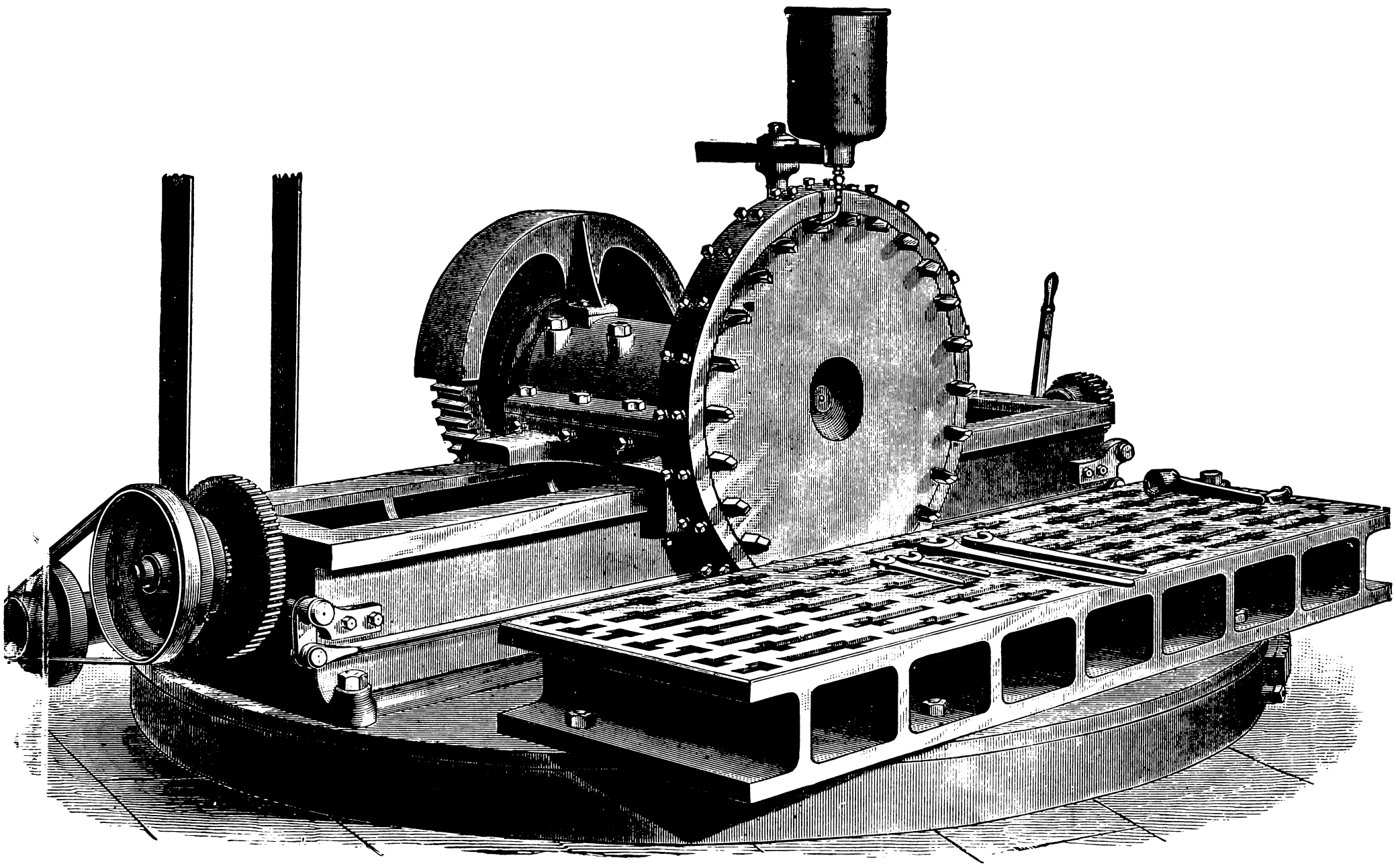

Fig. 1564.

Chapter XVII.—PLANING MACHINERY.

FIG. 1565 represents a planer by William Sellers and Co., of Philadelphia, Pennsylvania. This planer is provided with an automatic feed to the sliding head, both horizontally and vertically, and with mechanism which lifts the apron, and therefore the cutting tool, during the backward stroke of the work table, and thus prevents the abrasion of the tool edge that occurs when the tool is allowed to drag during the return stroke. The machine is also provided with a quick return motion, and in the larger sizes with other conveniences to be described hereafter.

The platen or table is driven by a worm set at such an angle to the table rack as to enable the teeth of the rack to stand at a right angle to the table length, less the angle of friction, about 5 degrees, and as a result the line of thrust between the worm and the rack is parallel to the V-guideways, which prevents wear between the Vs of the table and of the bed.

The driving pulleys are set at a right angle to the length of the machine; their planes of revolution being, therefore, parallel to the plane of revolution of the line or driving shaft overhead, and parallel with the lathes and other machines driven from the same line of shafting, thus taking up less floor space, while the passage ways between the different lines of machines is less obstructed. By setting the worm driving shaft at an angle the teeth of the worm rotate in a plane at a right angle to the length

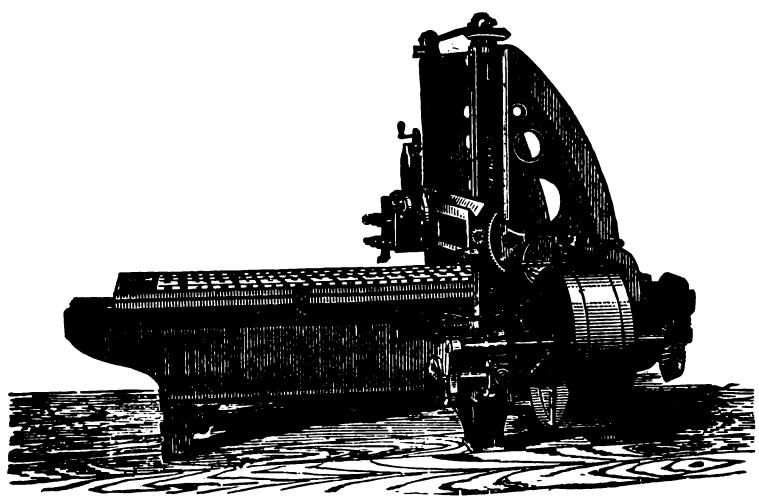

Fig. 1565.

of the work-table rack, and as a result the teeth of the worm have contact across the full width of the rack teeth instead of in the middle only, as is the case when the axis of a worm is at a right angle to the axis of the wheel or rack that it drives.

Furthermore, by inclining the worm shaft at an angle the teeth of the rack may be straight (and not curved to suit the curvature of the worm after the manner of worm wheels), because the contact between the worm and rack teeth begins at one side of the rack and passes by a rolling motion to the other, after the manner and possessing the advantages of Hook's gearing, as described in the remarks made with reference to gear-wheel teeth.

By inclining the worm shaft, however, the side thrust incidental to Hook's gearing is avoided, the pressure of contact of tooth upon tooth being in the same direction and in line with the rack motion. As the contact between the worm teeth and the rack is uniform in amount and is also continuous, a very smooth and uniform motion is imparted to the work table, and the vibration usually accompanying the action of spur gearing is avoided.

The worm has four separate spirals or teeth, hence the table rack is moved four teeth at each worm revolution, and a quick belt motion is obtained by the employment of pulleys of large diameter.

It is somewhat desirable that the belt motion of a planing machine be as quick as the conditions will permit, because the amount of power necessary to drive the machine can thus be obtained by a narrower belt, better adapted for shifting; but on the other hand, the stored energy in the reversing pulley and centrifugal tension in the belt, fix limits not to be exceeded within which the planer is designed to run.

The mechanism for shifting the belt to reverse the direction of table motion is shown in Fig. 1566 removed from all the other mechanism.

To the bracket or arm B are pivoted the arms or belt guides C and D and the piece G. In the position occupied by the parts in the figure, the belt for the forward or cutting stroke would be upon the loose pulley P′, and that for the quick return stroke would be upon the loose pulley P, hence the machine table would remain at rest. But suppose the rod F be moved by hand in the direction of arrow *f*, then G would be moved upon its pivot X, and its lug *h* would meet the jaw *i* of C, moving C in the direction of arrow *a*, and therefore carrying the belt from loose pulley P′ on to the driving pulley P″, which would start the machine work table, causing it to move in the direction of arrow W until such time as the stop A meets the lug R, operating lever E and moving rod F in the direction of arrow *d*. This would move G, causing its lug *h* to meet the jaw *j*, which would move C from P″ back to the position it occupies in the figure, and as the motion of G continued its shoulder at *g′* would meet the shoulder or lug T of K (the latter being connected to D) and move arm D in the direction of *b*, and therefore carrying the parallel belt upon P, and causing the machine table to run backward, which it would do at a greater speed than during the cutting traverse, because of the overhead pulley on the countershaft being of greater diameter than that for the cutting stroke.

It is obvious that since each belt passes from its loose pulley to the fast one, the width of the overhead or countershaft pulleys must be twice as wide as the belt, and also that to reverse the direction of pulley revolution, one driving belt must be crossed; and as on the countershaft the smallest pulley is that for driving the cutting stroke, its belt is made the crossed one, so as to cause it to envelop as much of the pulley circumference as possible, and thereby increase its driving power. The arrangement of the countershaft pulleys and belts is shown in Fig. 1567, in which S is the countershaft and N, O the fast and loose pulleys for the belt from the line shaft pulley; Q′ is the pulley for operating the table on the cutting stroke (with the crossed belt), while Q is the pulley for operating the table on its return stroke. The difference in the speed of the table during the two strokes is obviously in the same proportions as the diameters of pulleys Q′ and Q.

The feed rod, and feed screw, and rope for lifting the tool on the back stroke are operated as follows:—

Fig. 1568 is an end view of the mechanism viewed from the front of the machine, and Fig. 1569 is a side view of the same.

The feed train is operated by a pinion carried upon the hub of the loose pulley which carries the forward motion belt; and a clutch, operated by a torsion spring, acts when the belt is shifted to the fast pulley P″ so as to keep the pulley P′ in rotation. A portion of the feed train is thus kept running continuously, and the action of the table in reversing the shifting lever causes the movement of a slide, which withdraws a stop from an escapement clutch, and permits the feed train to rotate half a turn, until the opposite stop on the slide disengages the escapement clutch and the feed wheels will cease turning until that stop is in turn withdrawn. The half turn of the feed wheels imparts a movement to the feed ratchets which operate the crosshead feeds and the feed of the vertical slide rests, through the connecting rods indicated in the plates, the amount of feed being determined by the location of the adjustable crank-

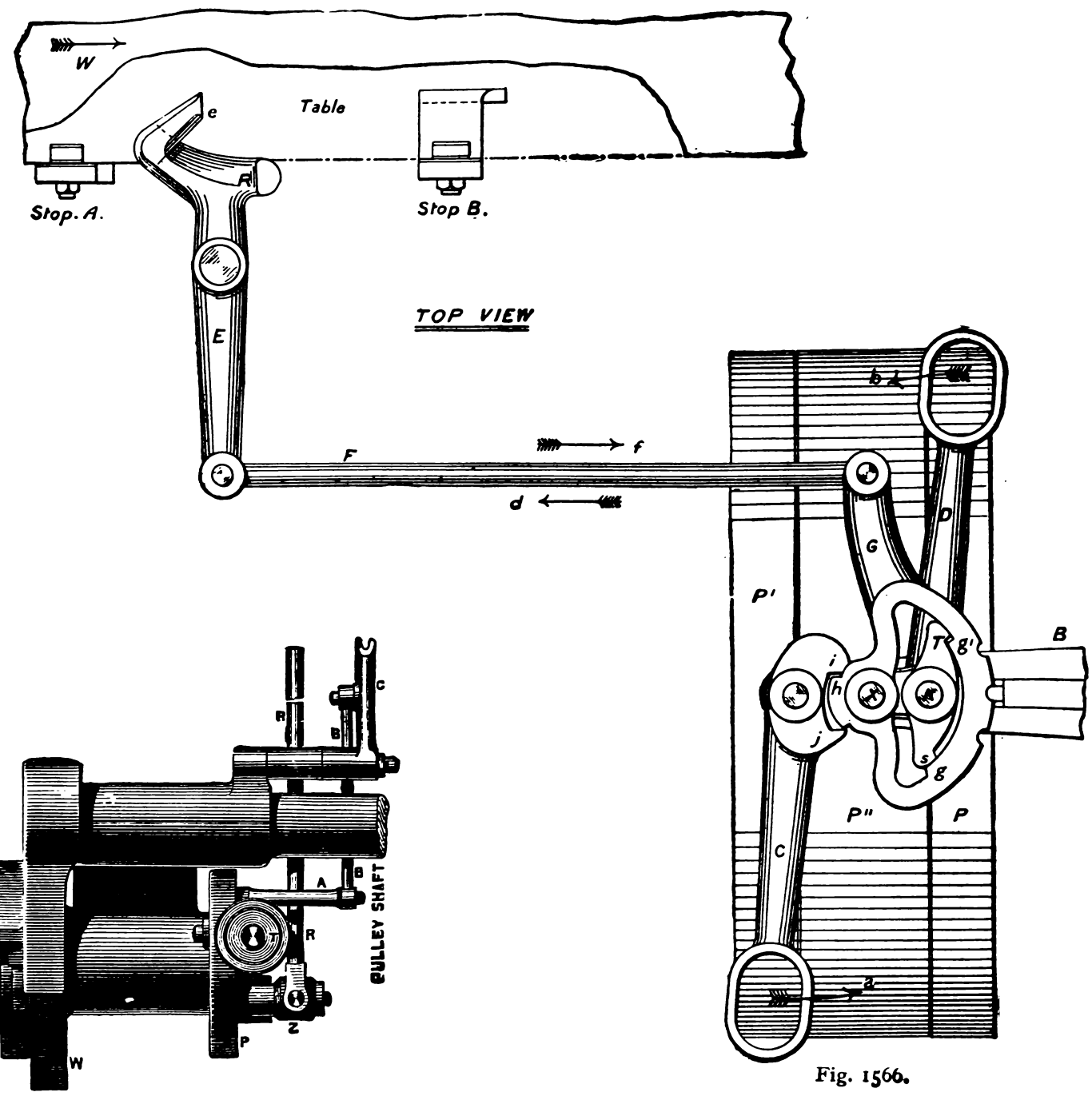

Fig. 1566.

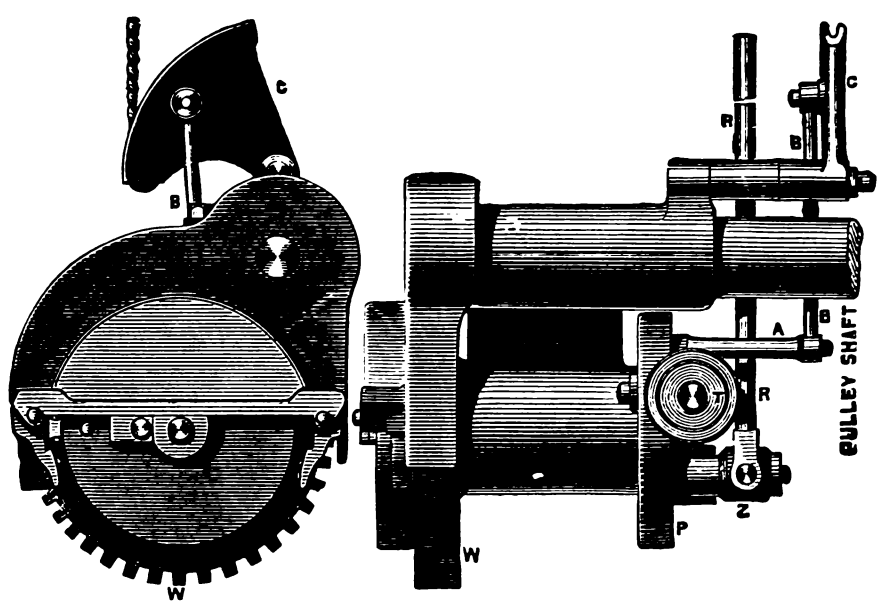

Fig. 1568.

Fig. 1569.

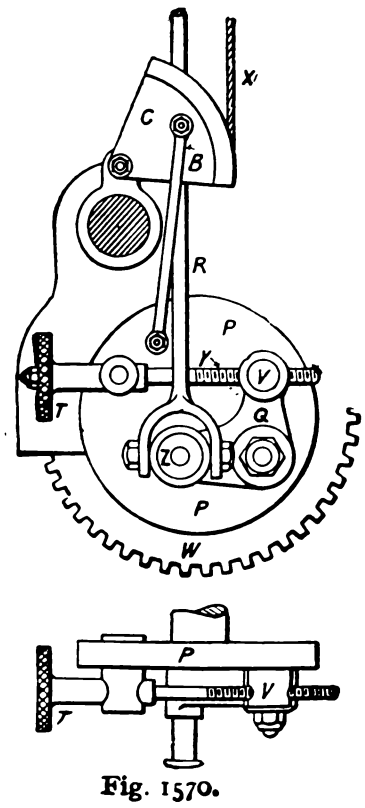

Fig. 1570.

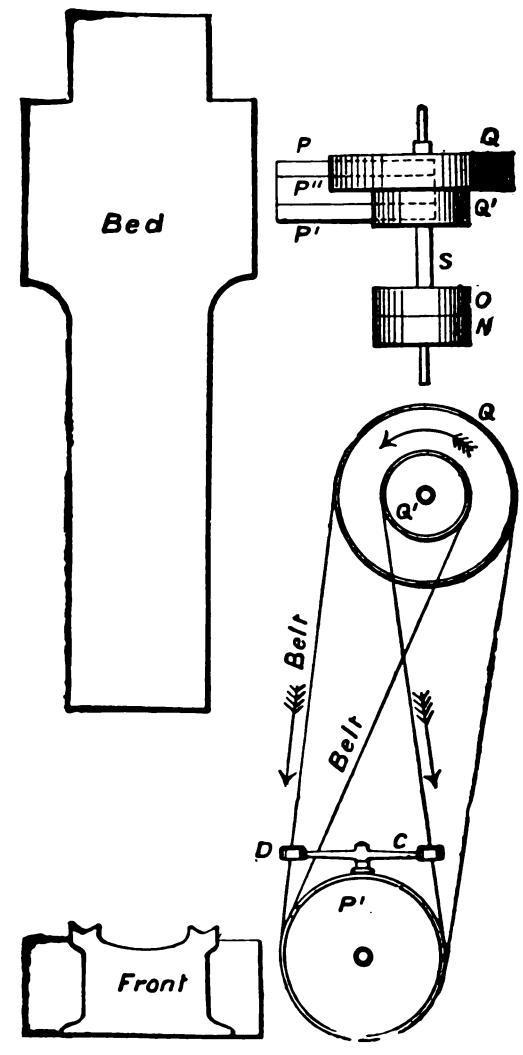

Fig. 1567.

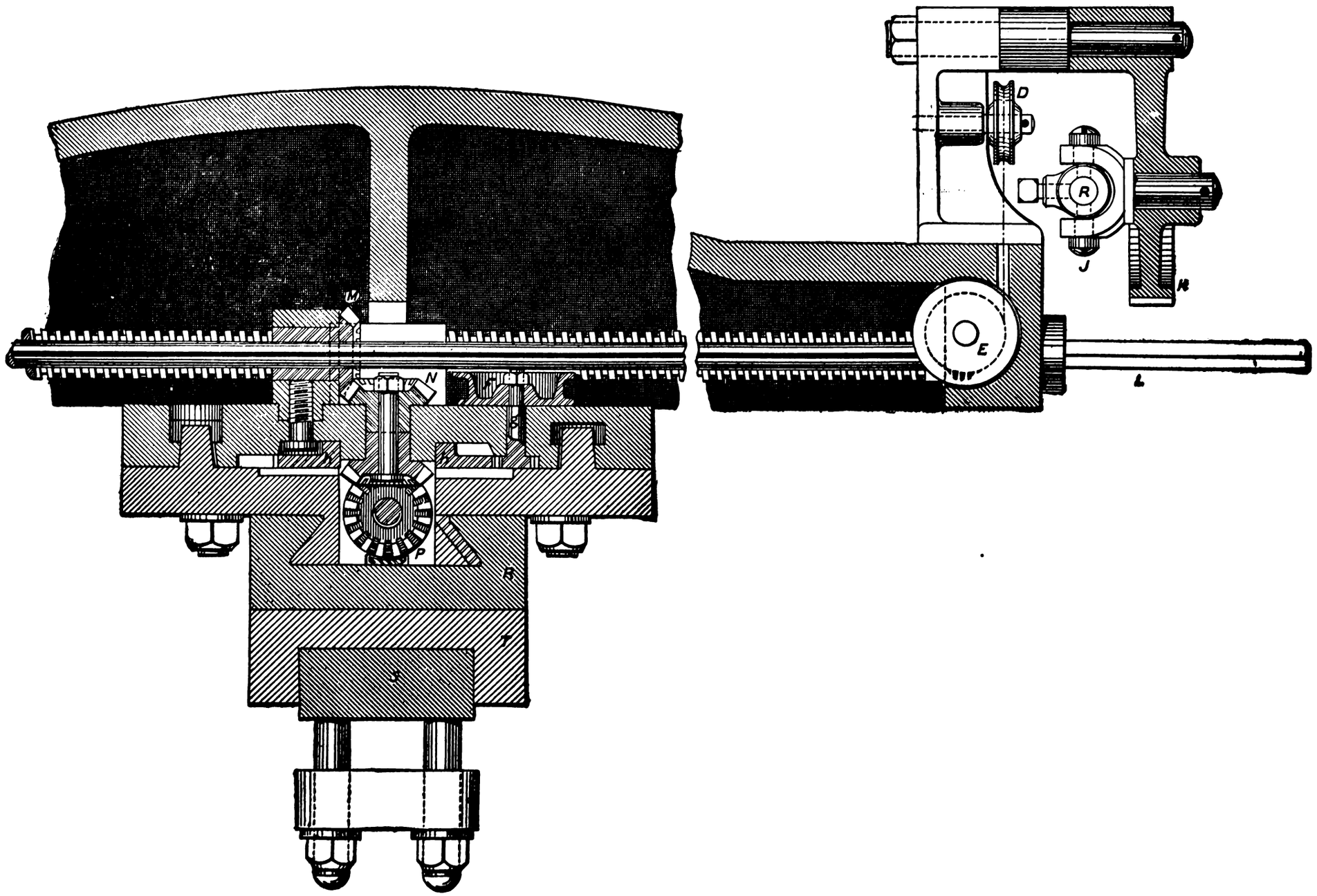

Fig. 1571.

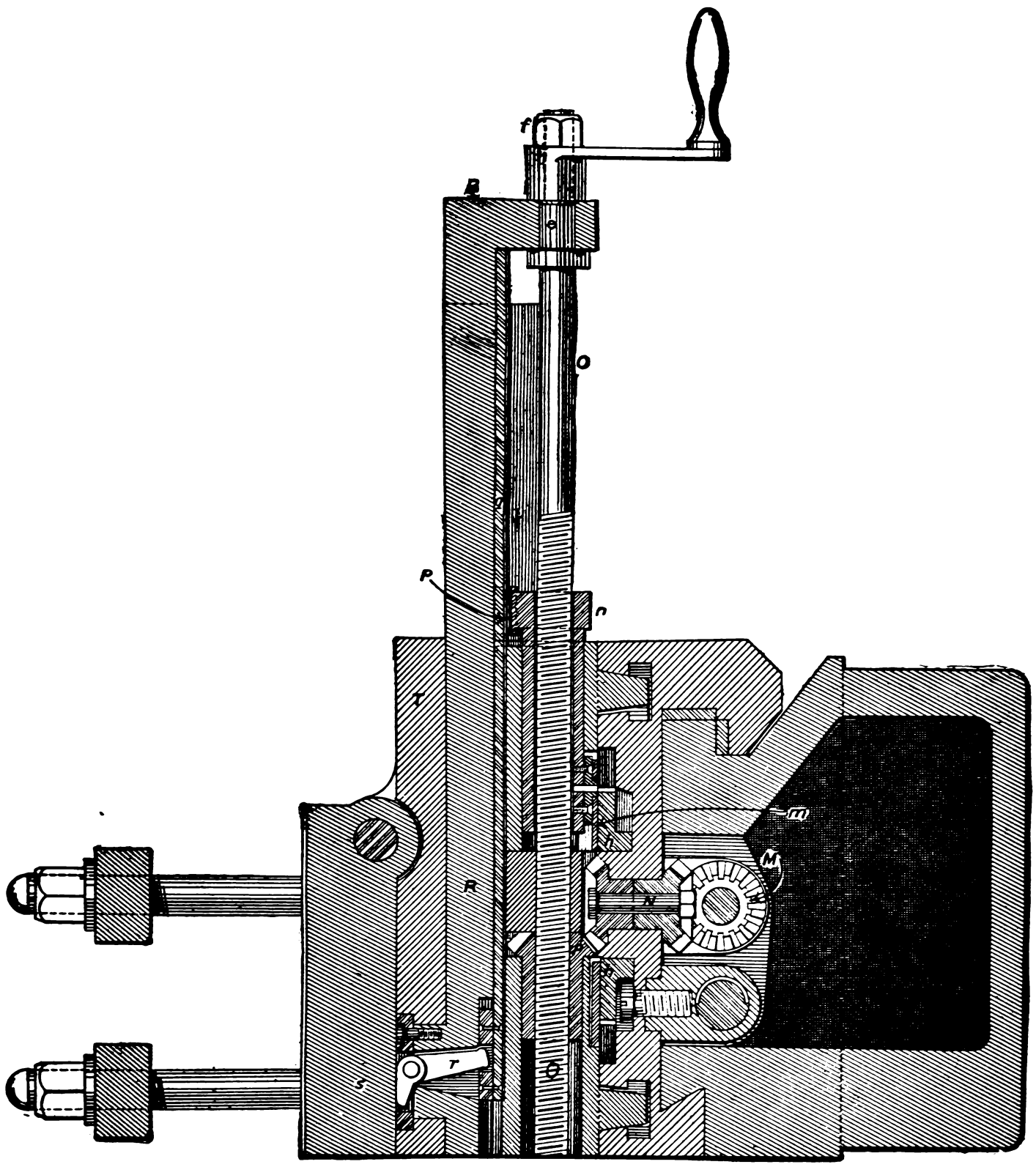

Fig. 1572.

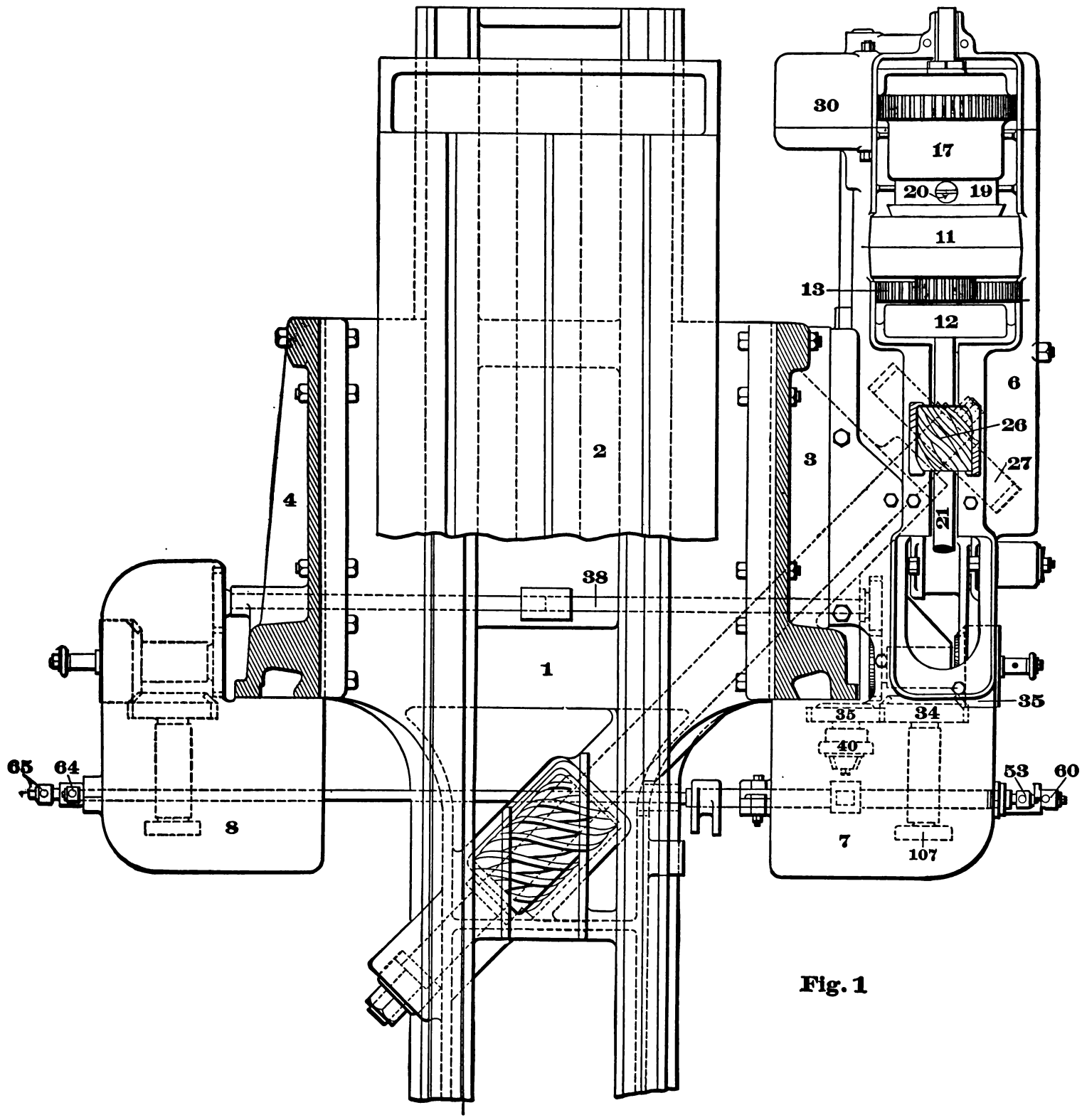

Fig. 1

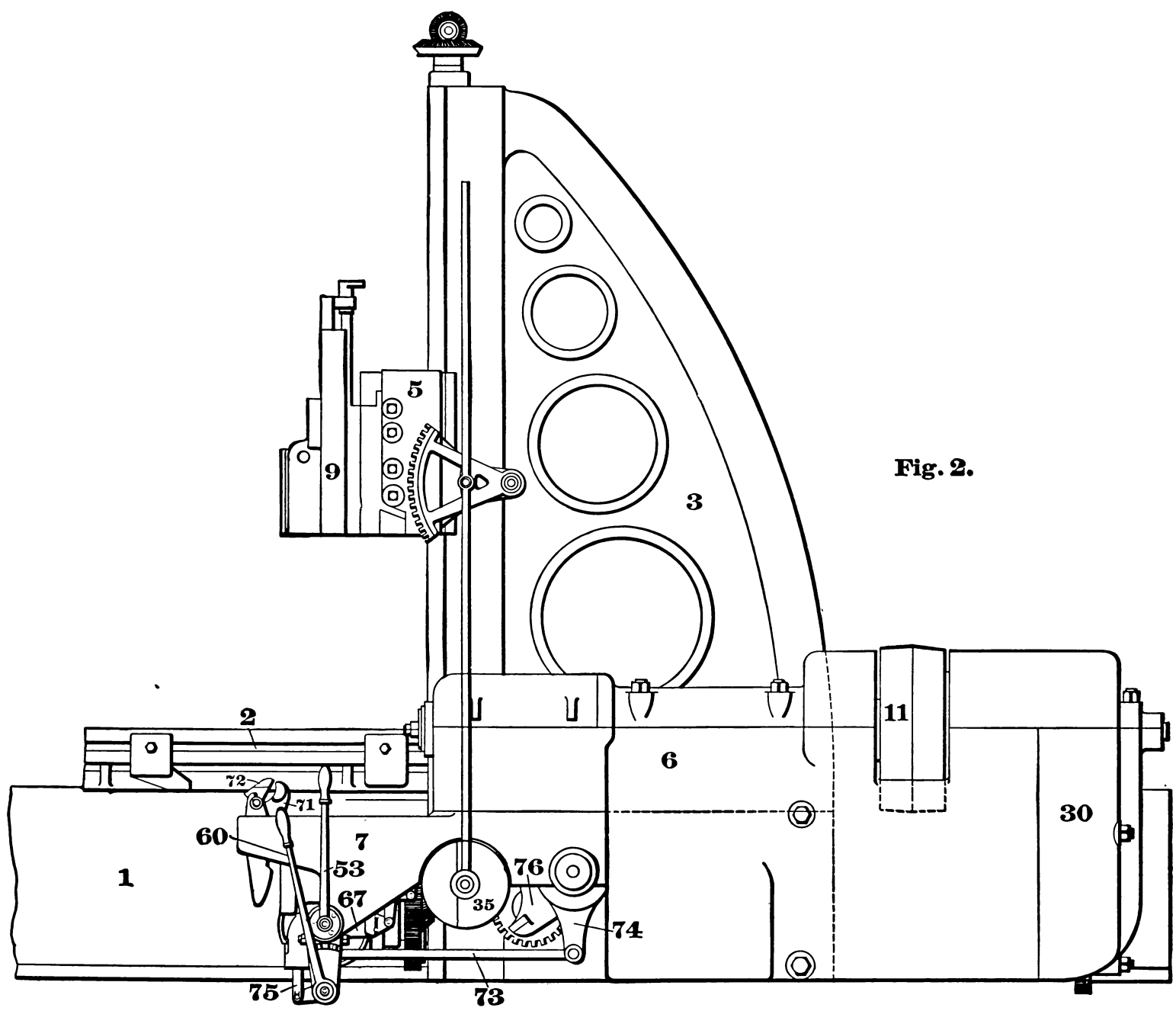

Fig. 2.

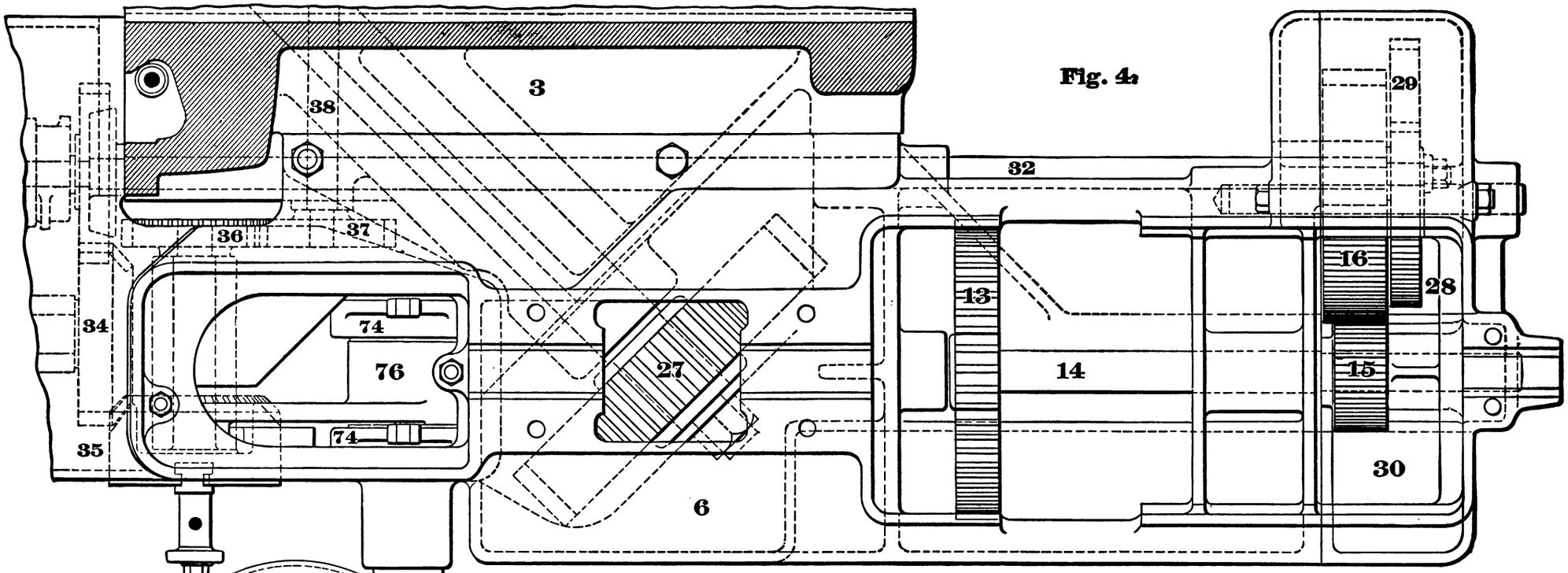

Fig. 4.

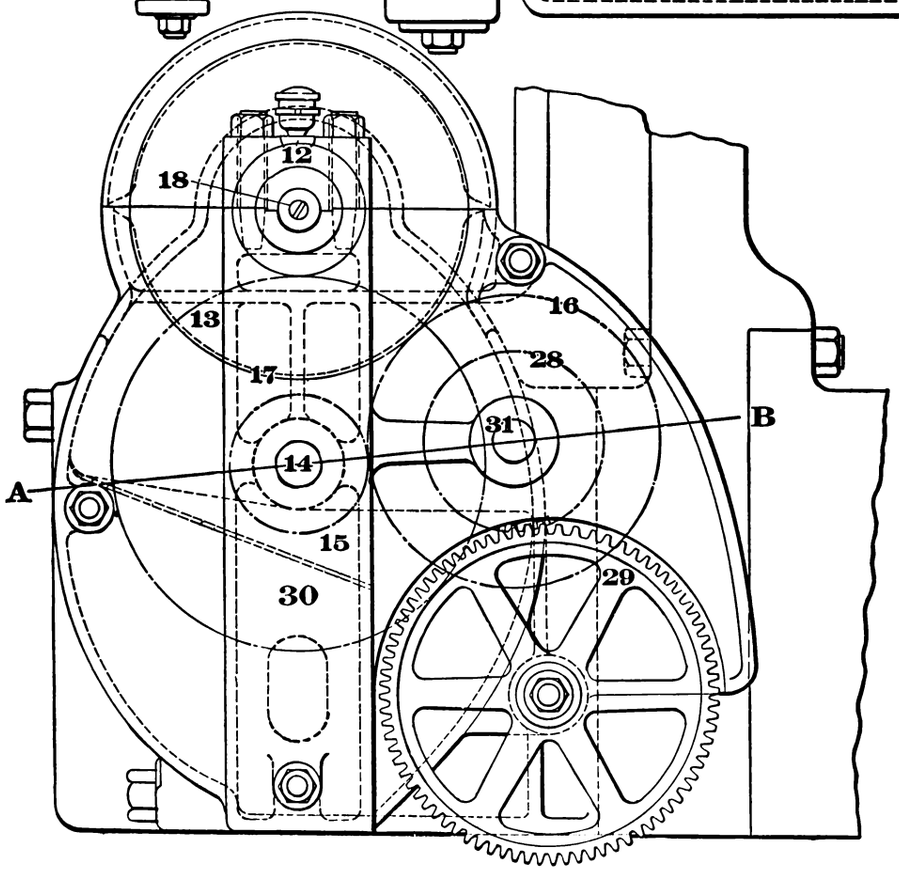

Fig. 5.

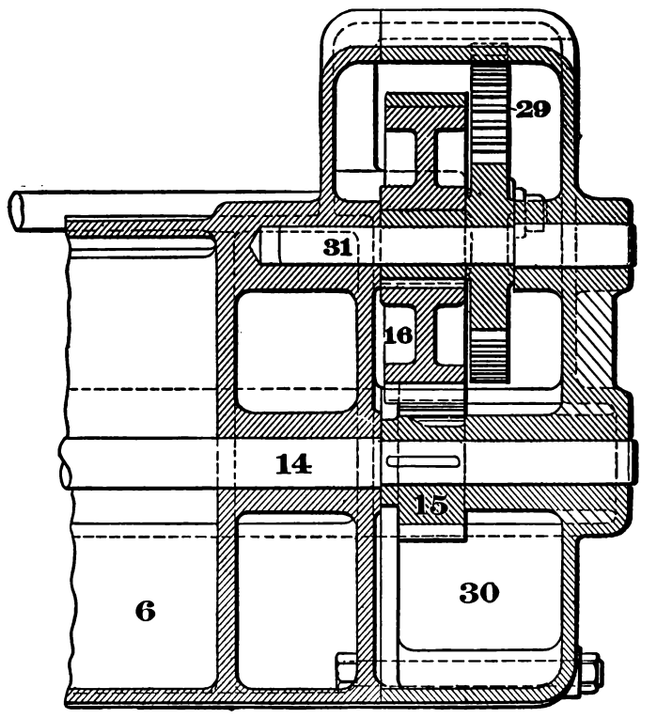

Fig. 6.

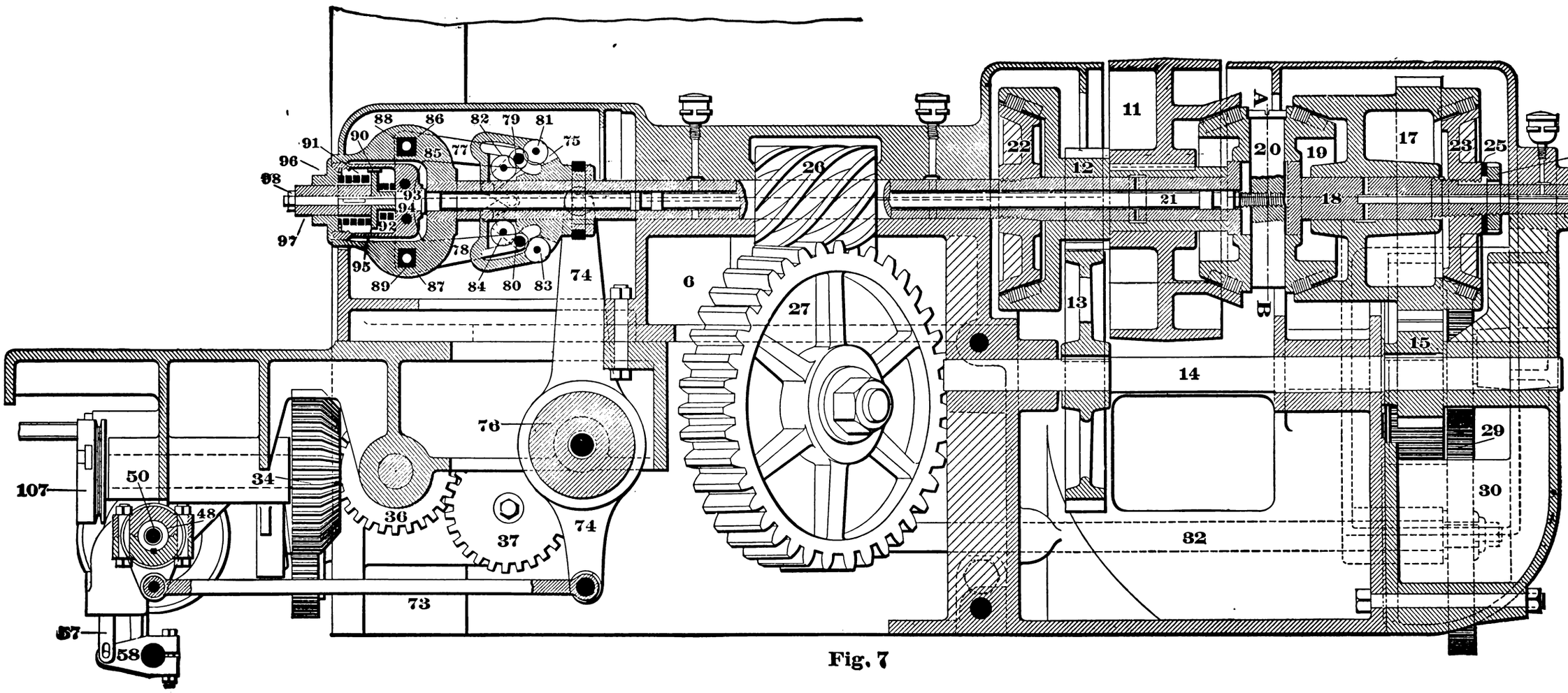
88
86
82
79
81
90
91
96
98
85
77
75
93
94
92
97
95
89
87
78
84
80
83
74
26
6
27
22
12
11
A
20
19
17
23
25
24
21
18
13
B
15
14
76
29
30
107
50
34
48
36
37
74
32
73
57
58

Fig. 7

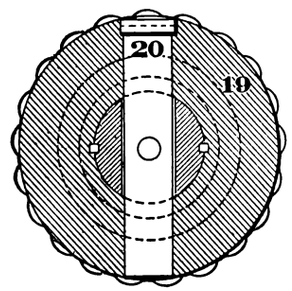
20
19

Fig. 8

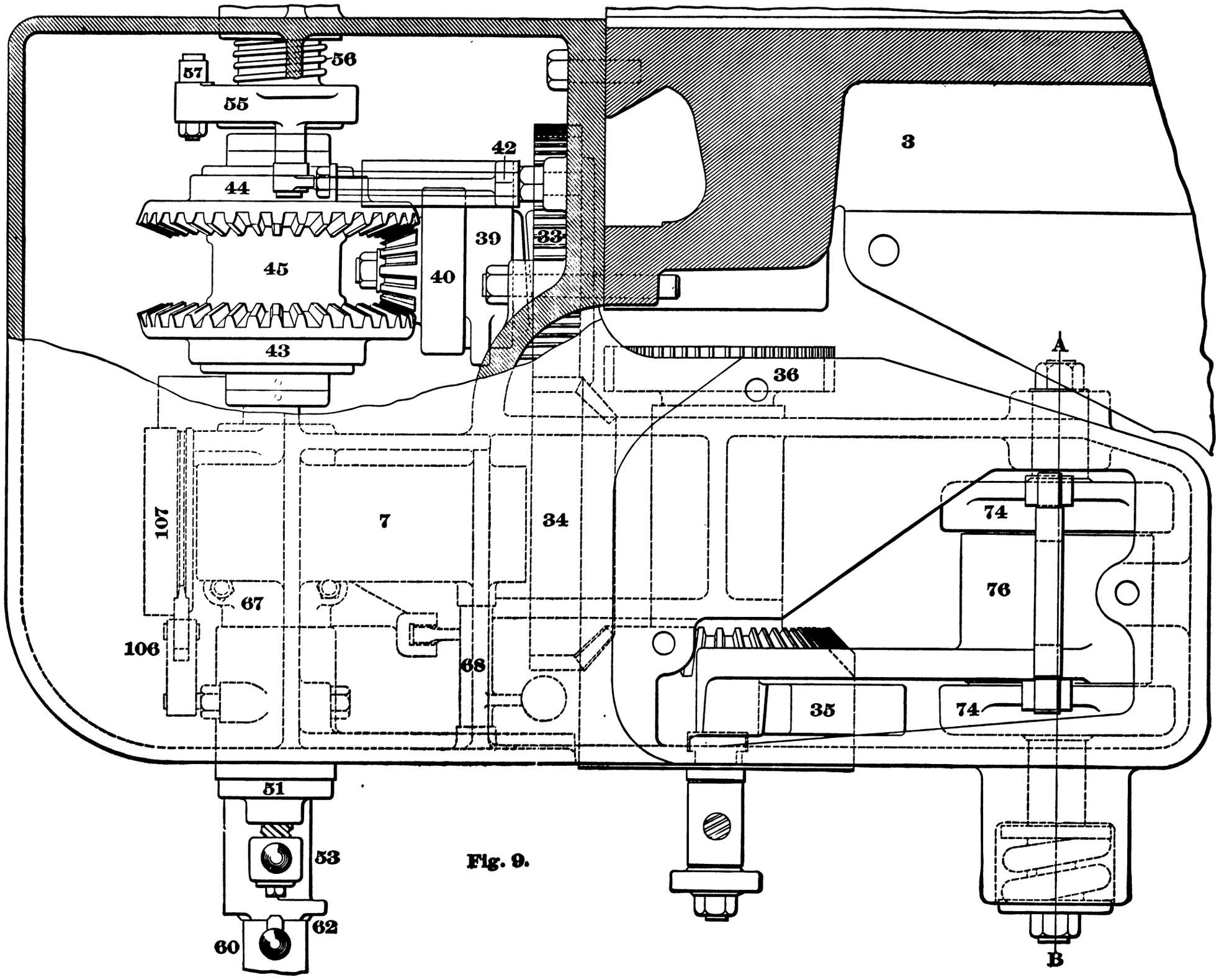
56
57
55
42
44
39
33
45
40
43
3
A
36
107
7
34
74
76
67
106
68
35
74
51
53
62
60
B

Fig. 9.

Fig. 10.

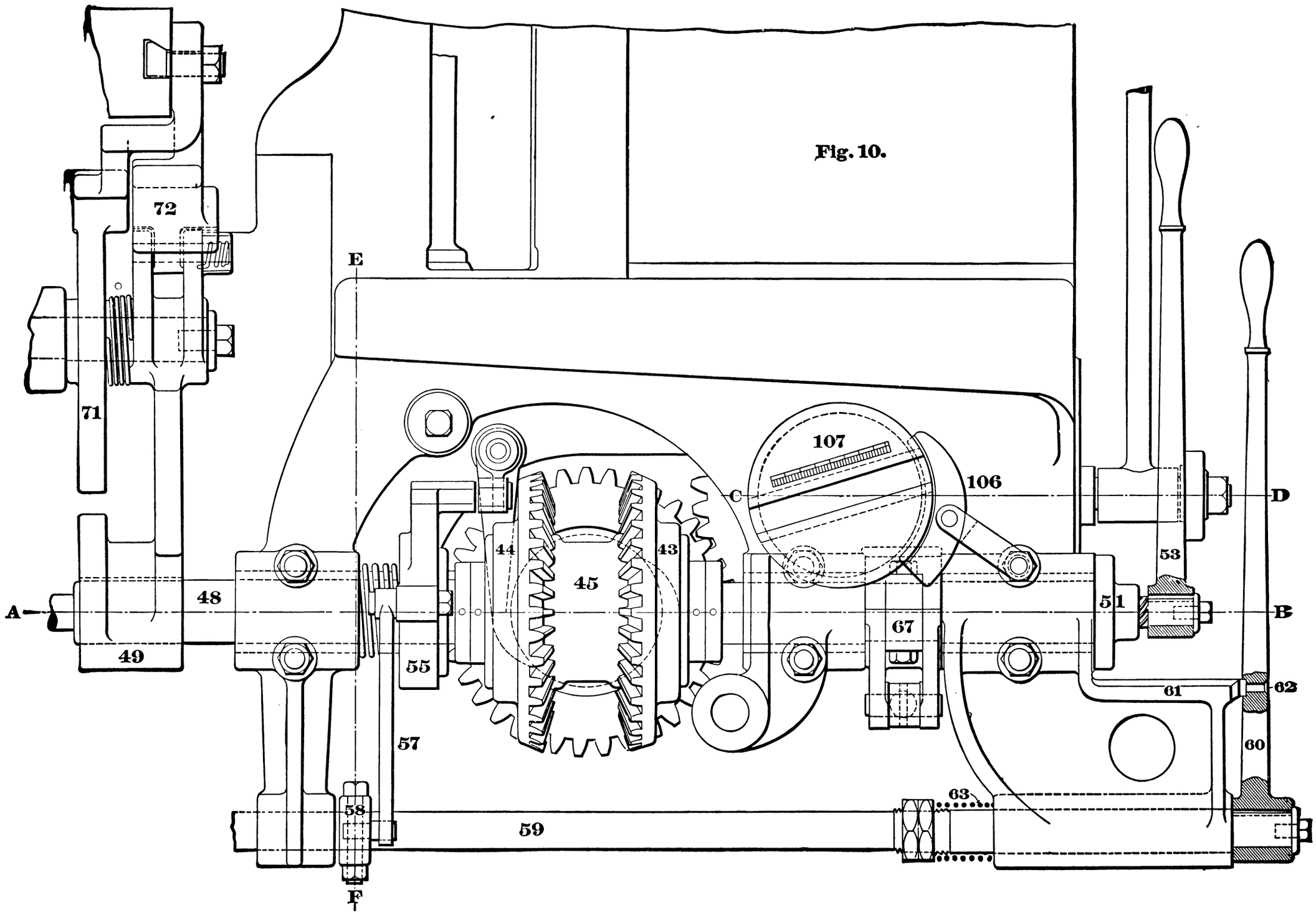

Fig. 11.

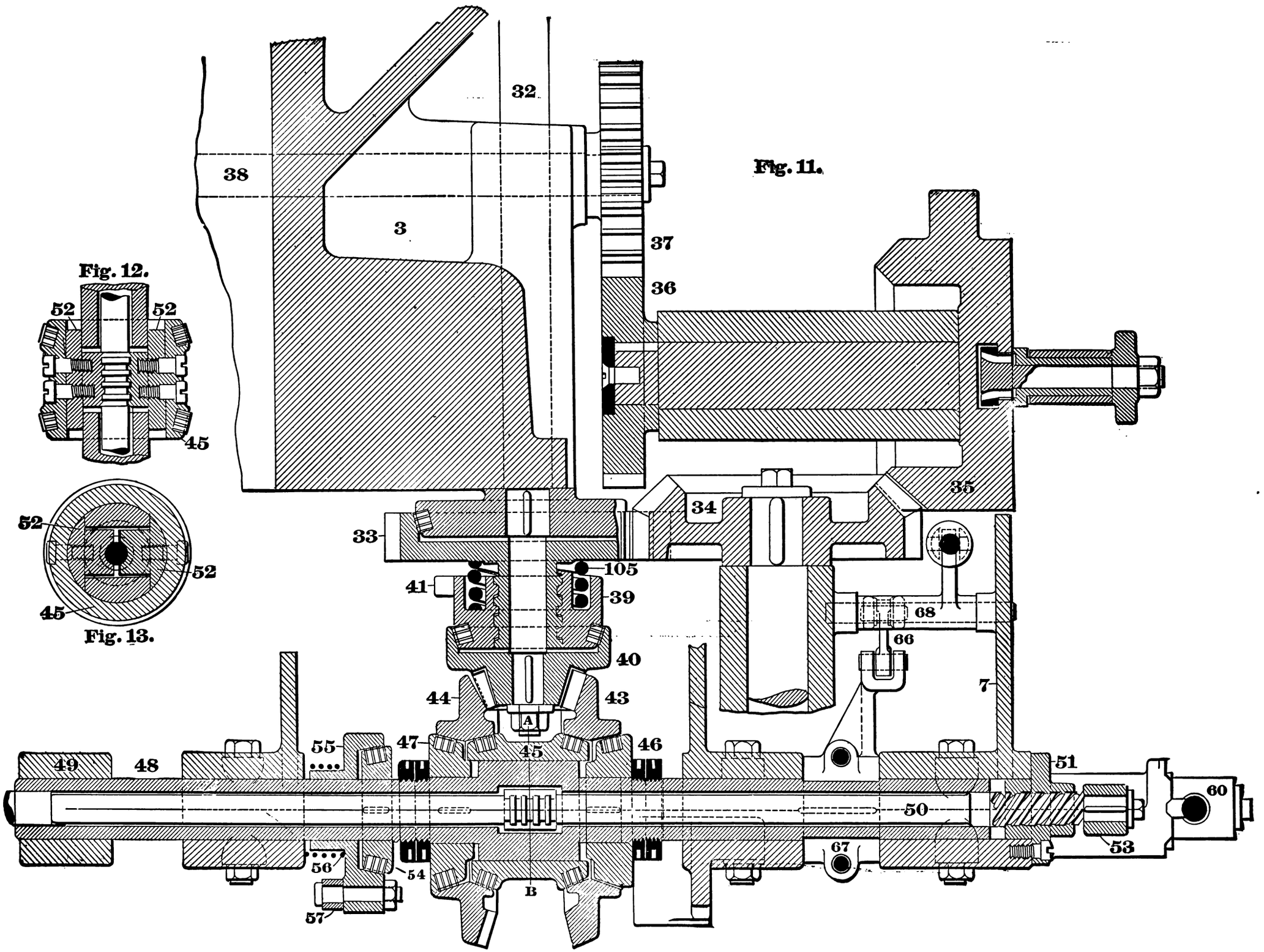

Fig. 12.

Fig. 13.

pins on the feed wheels. Since the movement of the feed train is entirely independent of the velocity of the table, it is possible to increase the reversing speed of the latter without affecting the action of the feed motion train, which works without shock no matter how rapidly the table is reversed. The slide which carries the escapement stops is connected with the shifting lever through a conical wood-lined friction clutch, which may be disengaged by a quarter turn of the handle on the end of the shifting lever, and when this is done the planer table may be reversed by hand as often as desired without feeding the tools ; that is, the feed motion can be disengaged by the handle on the shifting lever without the necessity of throwing out the ratchet pawls themselves. This is a matter of marked convenience in the operation of the machine.

The rotation of the feed mechanism gives a corresponding movement to the cord which operates the tool lifter. This cord passes around the sheaves D and E, Fig. 1571, takes a turn around the broad-faced sheaves F in the saddle, and passes out of the opposite end of the cross rail, over suitable sheaves which direct it to a sheave on the top of the left-hand upright, over which it passes to a counterweight sufficient to keep it taut.

The pulley F is therefore revolved at each reversal of Plate P, Figs. 1569 or 1570, or in other words, each time the work table reverses its motion.

In reference to Figs. 1571 and 1572, F, Fig. 1571, is fast upon a pin *g*, at whose other end is a pinion operating a gear wheel *h*. Upon the face of this gear wheel is secured a steel plate shown at *m* in Fig. 1572, which is a vertical section of the sliding head. In a cam groove in *m* projects a pin that is secured to the sleeve *n*, which envelops the vertical feed screw O. This sleeve *n* has frictional contact at *p* with the bar *q*, whose lower end receives the bell crank *r*, which on each return stroke is depressed, and thus moves the tool apron *s*, and with it the tool, which is therefore relieved from contact with the cut upon the work.

The self-acting vertical feed is actuated as follows :—

Referring to Figs. 1571 and 1572, the gear segment K operates a pinion upon the squared end of the feed rod L, this pinion L having the usual pawl and ratchet for reversing the direction of rod revolution.

The splined feed rod L actuates the bevel pinion M, which is in gear with bevel pinion N, the latter driving pinion P, which is threaded to receive the vertical feed screw O ; hence when P is revolved it moves the feed screw O endways, and this moves the vertical slide R upon which is the apron box T and the apron *s*. To prevent the possibility of the friction of the threads causing the feed screw O to revolve with the pinion P, the journal *e* of the feed screw O is made shorter than its bearing in R, so that the nut *f* may be used to secure the feed screw O to the slide R.

An improvement in the construction of the above machine is thus described in the patent specification :

This invention relates in general to that class of planing machines in which the metal to be planed is mounted upon a table which moves back and forth under a cutting tool, or the converse thereof in which the work is stationary and the tool moves, and particularly to the driving and feeding mechanisms in such planing machines. Improvements in these mechanisms have been developed to reduce the time lost in starting, stopping, and returning, and other advantages in convenience and facility of manipulation have been at the same time secured as shown by Letters Patent No. 374,908, granted to William Sellers and John Sellers Bancroft, December 13, 1887, to which improvements the present invention particularly refers. The introduction of a friction clutch on the pulley shaft between two driving pulleys, running constantly in opposite directions, overcame the necessity for reversing those pulleys with the table, and thus saved a great part of the loss in power occasioned by the reversal of the pulleys on the old belt-shifting machines. The clutch, being much smaller and lighter than the pulleys, opposed less inertia to stopping and starting, and made it possible to increase the return speed of the planer much beyond anything theretofore attempted. This increased return speed was attended by a corresponding increase in the power required to drive the return movement, and by certain disadvantages, such as increased wear and tear, heating of the clutch pulleys, and the effect thereof in disturbing the proper adjustment of the clutch, the difficulty of obtaining high ratios of forward and return speeds by a single countershaft, and also the difficulty of obtaining a friction clutch of small size of sufficient grip to drive the maximum cut desired. The severe pressure required to operate by hand the driving clutch of a large machine is objectionable, and the heating and consequent expansion of the friction clutches are also objectionable, for this requires increased movement of the engaging member to obtain the same driving effect. To remedy these objectionable features, it is an object of the invention to simplify the countershafting, and increase the driving power of the machine under cut.

It is a further object of the invention to reduce the pressure required on the driving clutch, and thereby increase the ease with which the machine can be operated by hand.

It is a further object of the invention to compensate for heating effects in the clutch, so that the driving capacity may be constant.

It is a further object of the invention to provide an adjustment for wear in the driving clutch with an adjustment for position, so that a uniform traverse can be easily maintained.

It is a further object of the invention to effect the movement of the driving clutch with as little effort on large machines as on small.

It is a further object of the invention to control the action of the feeding mechanism at pleasure, and to indicate at the same time the direction in which the table was moving when the last feed took place.

It is a further object of the invention to guard against wear on the driving clutch when not in action.

It is a further object of the invention to secure the cams and levers which operate the driving clutches in stable equilibrium in three important and well defined positions required for their proper action.

It is a further object of the invention to reduce friction in the sliding fulcrum block and levers on the pulley shaft, and at the same time equalize the pressure on the clutch shifting levers.

It is a further object of the invention to drive the feeding train from the idle wheel in the train which gears the driving clutches together, and to these ends the invention consists in a shaft on which is mounted a belt pulley, which, at the same time, is the driving part of a friction clutch called the "pulley friction ring," which drives, through reducing and reversing gears, the driving part of another friction clutch called the "geared friction ring," both mounted on the same shaft.

Either of these clutch rings may be engaged with the shaft by means of a double-faced counterpart of the friction rings, called the "reversing cone," which, in connection with the pulley friction ring and the geared friction ring, form two friction clutches.

It further consists in abutment cones fixed on the pulley shaft, between which and the reversing cone the friction rings may be clamped or released, the combination forming two "abutment friction clutches."

It further consists in the combination of metallic and non-metallic surfaces between the said friction rings and cones of the abutment friction clutches, so that the heating effect on one side of a ring may be neutralized by the expansion of the cone on its other side.

It further consists in an adjustable collar on the pulley shaft by which wear on the friction clutches can be taken up, in connection with an adjustable operating rod for correcting the disturbance caused by taking up the wear.

It further consists in reversing friction clutches on the rock shaft which controls the table movement, called the "reversing rock shaft," by which the latter can be moved by power in either direction.

It further consists in a hand lever connected with the escapement stop, and having sufficient lost motion to allow this stop to work automatically when the lever is in its middle position, or to hold the stop from moving when this lever is at either end of its stroke.

It further consists in a centring mechanism connected with

the reversing rock shaft, whereby the reversing cone is always brought to a central position when not in action.

It further consists in the combination of links and levers on the sliding fulcrum block of the pulley shaft, whereby the operating levers will remain in three positions of stable equilibrium.

It further consists in driving the feeding train through the reversing wheel of the train, which gears the friction clutches together.

Fig. 1, Plate LXXVII., is a plan, partly in section, of a planing machine embodying these improvements. Fig. 2, Plate LXXVIII., is a side elevation, and Fig. 3, an end elevation of Fig. 2.

Fig. 4, Plate LXXIX., is an enlarged plan of the pulley frame with the pulley shaft and its cap removed, showing the gearing beneath, and a section of the upright to which the frame is attached. Fig. 5 is an end elevation of Fig. 4, showing the location of the intermediate reversing gear and the feeding shaft. Fig. 6 is a section on the line A B, Fig. 5. Fig. 7 is a vertical section through the driving gear and clutches of the pulley frame shown in Fig. 5. Fig. 8 is a section through the reversing cone on the line A B, Fig. 7. Fig. 9 is a plan of the feed stand, part of which is broken away to show the gearing beneath. Fig. 10 is an end elevation of the feed stand shown in Fig. 9. Fig. 11 is a horizontal section on the planes A B and C D, Fig. 10, showing the power shifting clutches and a portion of the feed train adjacent to the upright.

Fig. 12 is a section through the shifting shaft and clutch on a plane normal to that shown in Fig. 10. Fig. 13 is a section through the shifting shaft and clutch on the plane A B, Fig. 11. Fig. 14 is an enlarged vertical section through the feed stand on the line E F, Fig. 10, showing the escapement stop and its connections. Fig. 15 is an enlarged vertical section on the line A B, Fig. 16, showing the safety clutch and levers in the reversing mechanism. Fig. 16 is a side elevation of the feed stand shown in plan by Fig. 9, a portion of the stand being broken away to show more clearly the centring mechanism for the reversing rock shaft in a position corresponding to the table at rest. Figs. 17 and 18 show the mechanism in a position corresponding to the return motion of the table. Fig. 19 shows the mechanism in a position assumed during the reversal of the table from return to forward motion, and Fig. 20 shows the shifting mechanism in a position corresponding to the forward motion of the table. Fig. 21 is an edge view of the shifting mechanism on the pulley shaft, in its neutral position. Fig. 22 is an end view of the same mechanism at right angles to that shown in Fig. 21. Fig. 23 is a section on line A B of Fig. 20. Fig. 24 is a vertical central section (sidewise) of Fig. 20. Fig. 25 is a sectional elevation on line C D of Fig. 20. Fig. 26 is a partially vertical section of Fig. 21 to show portions of the internal construction. Fig. 27 is a side elevation of a portion of the sliding sleeve and operating levers, showing the position assumed for the return motion of the table.

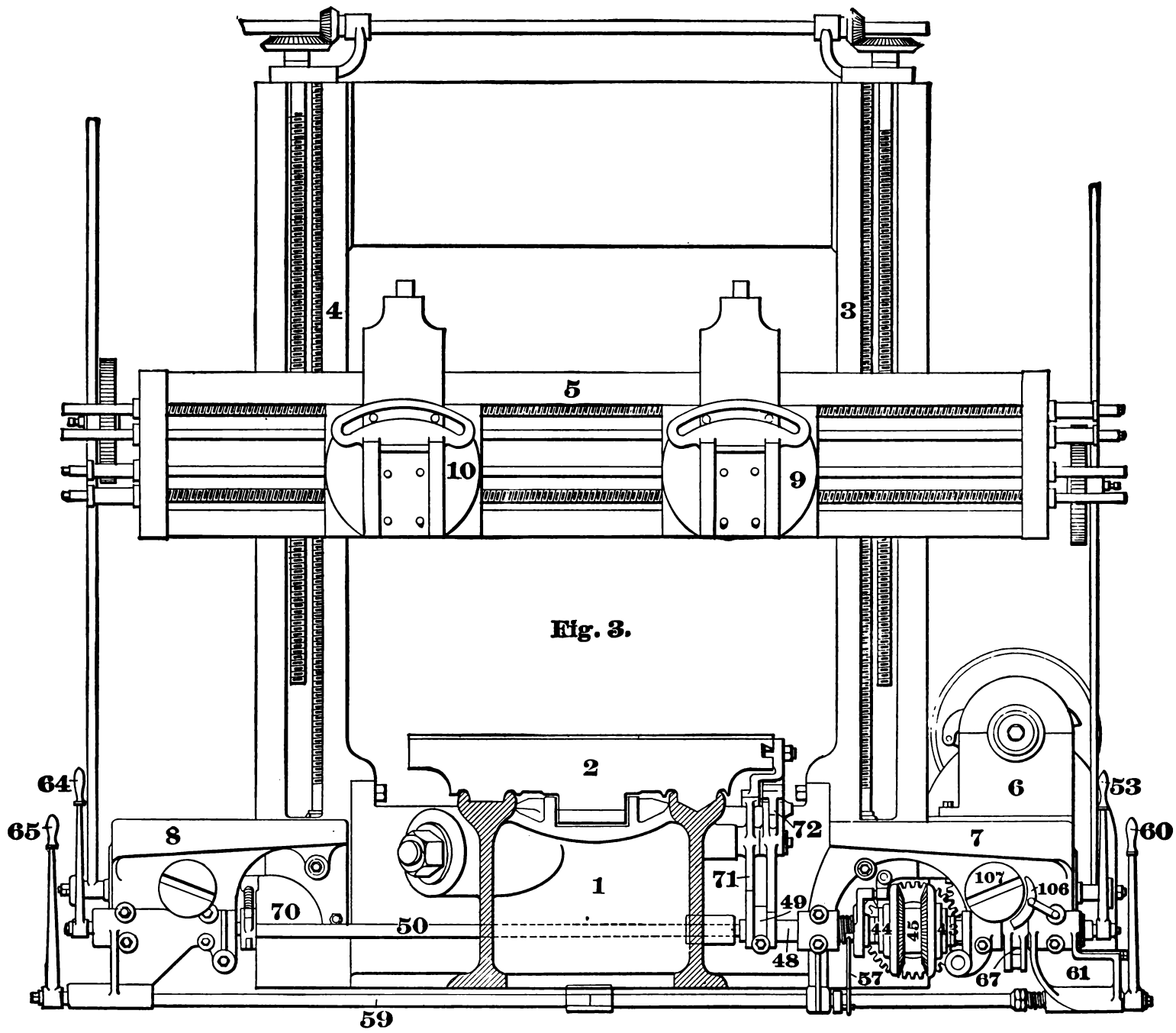

Fig. 3.

Fig. 28 is also a side elevation of the same parts in the position assumed during the reversal of the table from return to forward motion. Fig. 29 is also a side elevation of the same parts in the position corresponding to the forward motion of the table.

In all figures, the same parts are indicated by the same numerals. 1 is the planer bed, 2 the table, 3 the right-hand upright, 4 the left-hand upright, 5 the crosshead, 6 the main stand of pulley frame, 7 the right-hand feed stand, 8 the left-hand feed stand, 9 the right-hand saddle, and 10 an extra saddle called the left-hand saddle. The bed, table, and driving gear are substantially the same as shown and described in the patent No. 374,908. 11

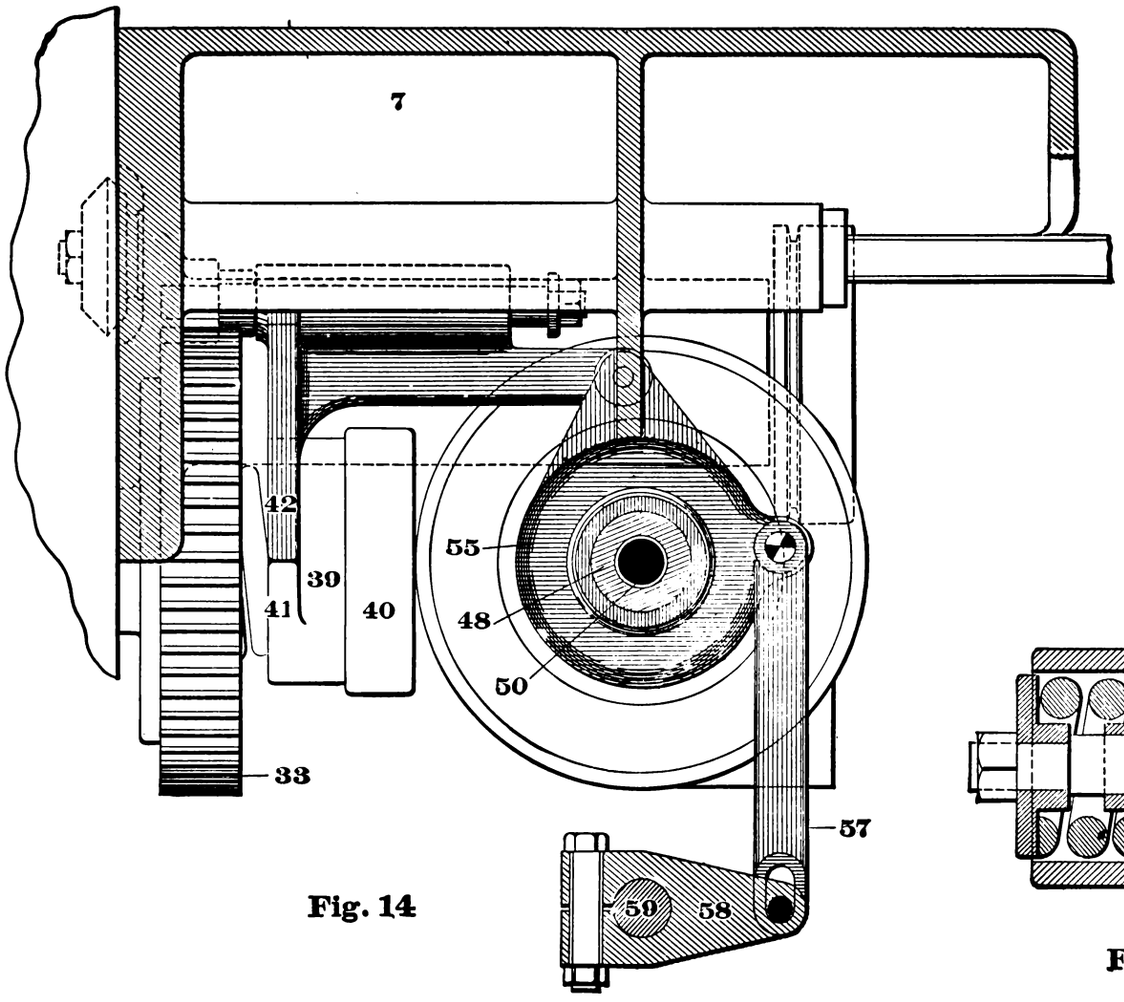

Fig. 14

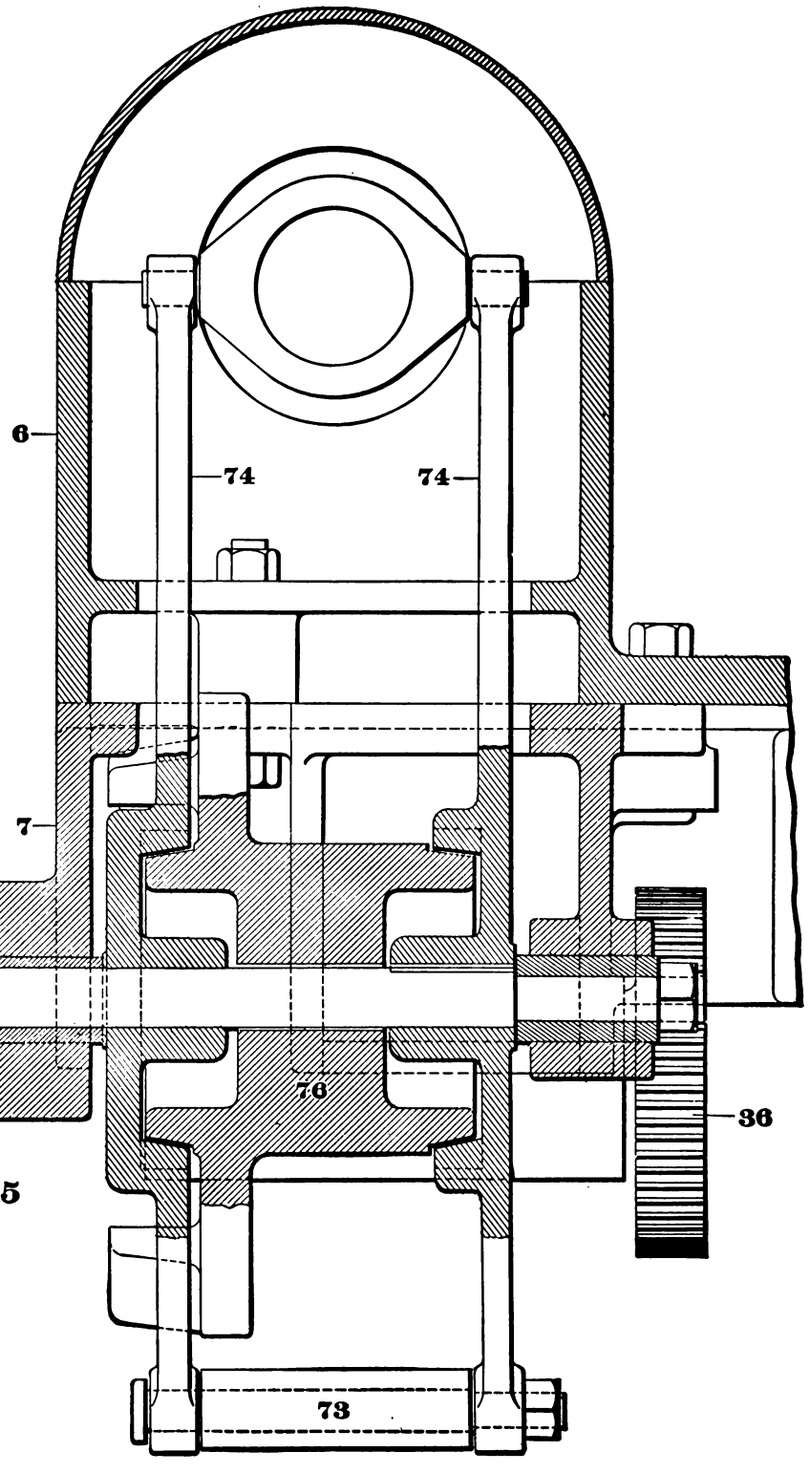

Fig. 15

Fig. 17.

Fig. 18.

Fig. 19.

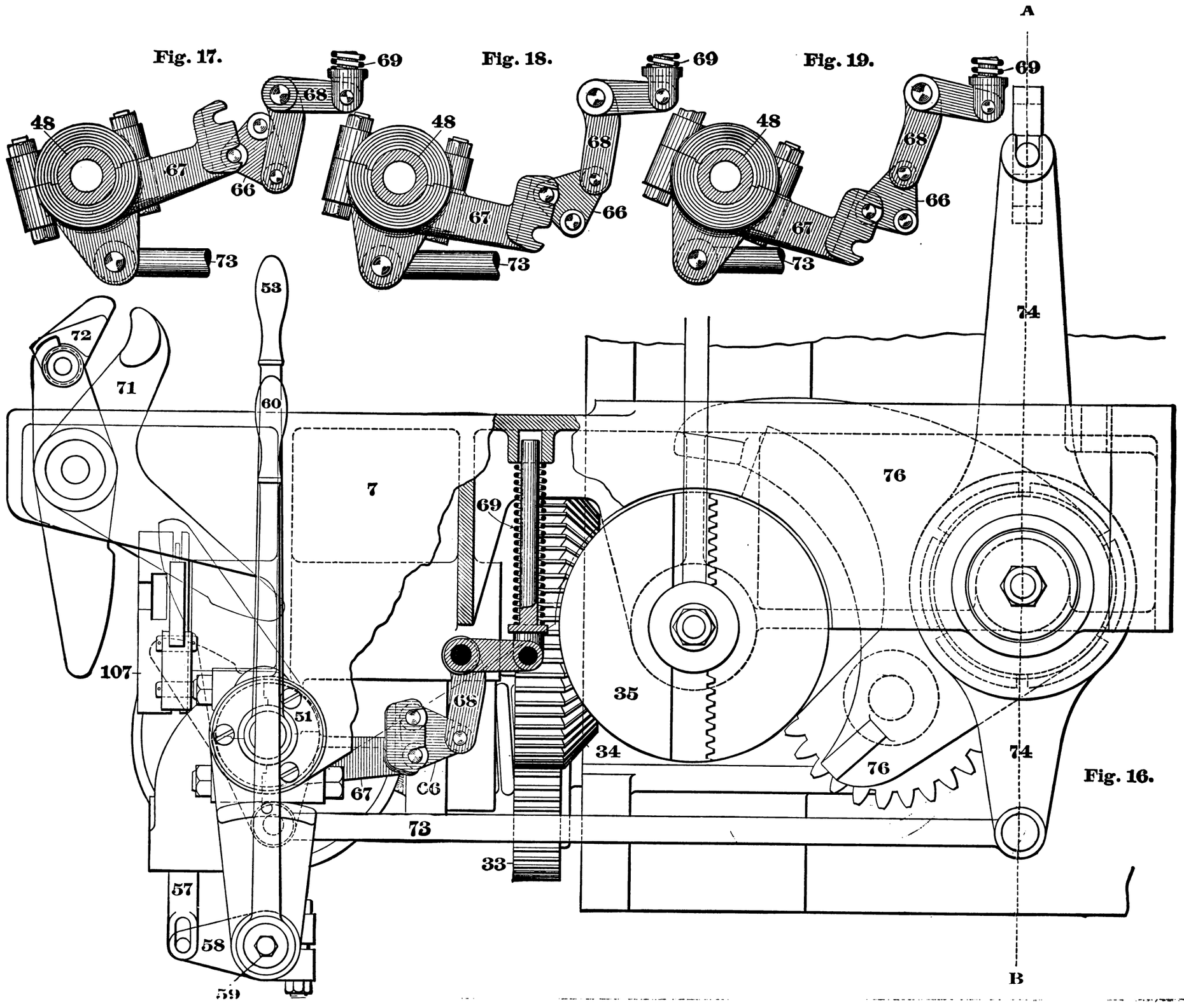

Fig. 16.

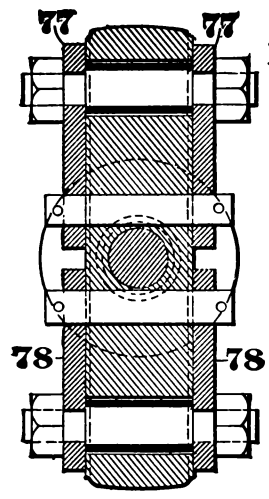

Fig. 25.

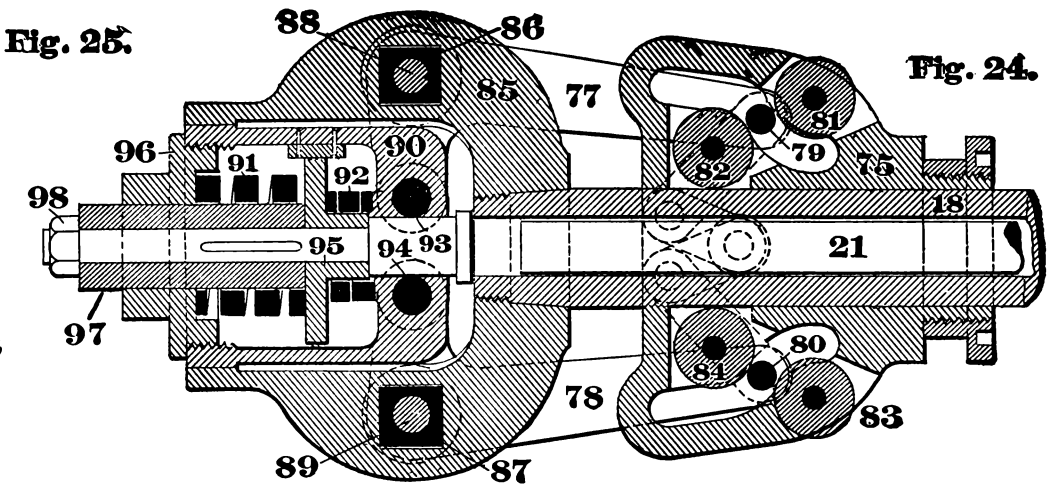

Fig. 24.

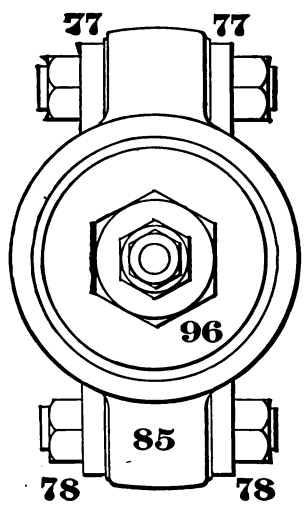

Fig. 22.

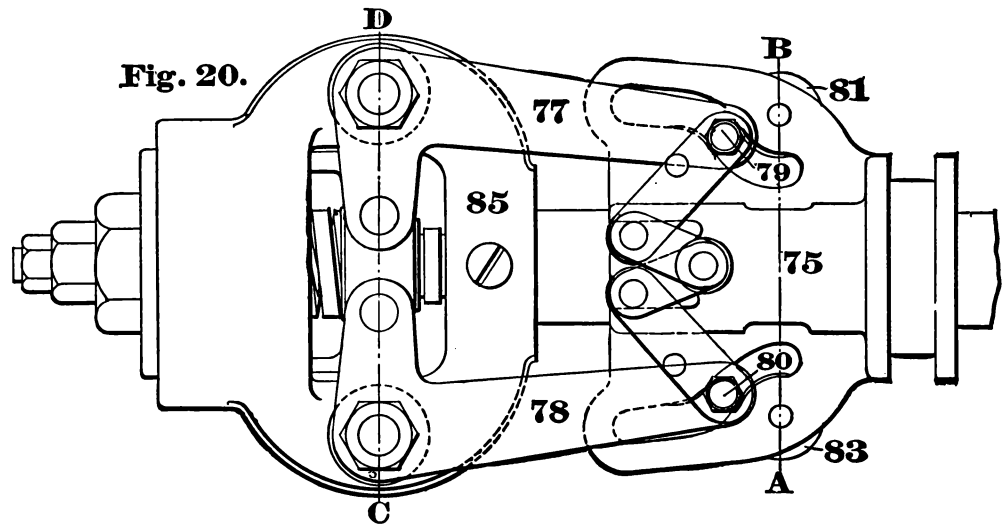

Fig. 20.

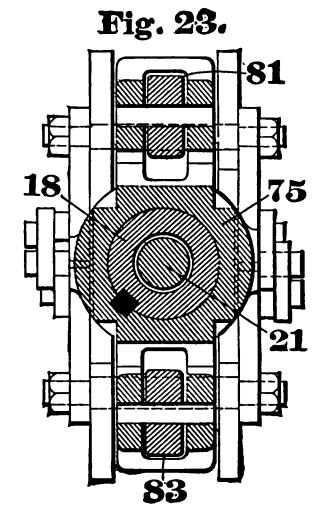

Fig. 23.

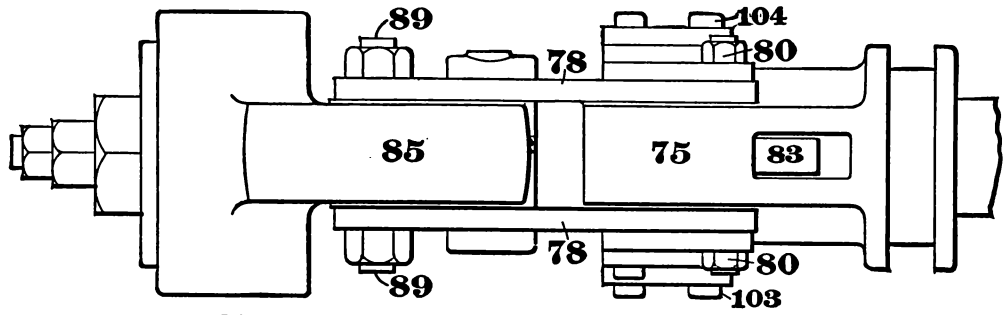

Fig. 21

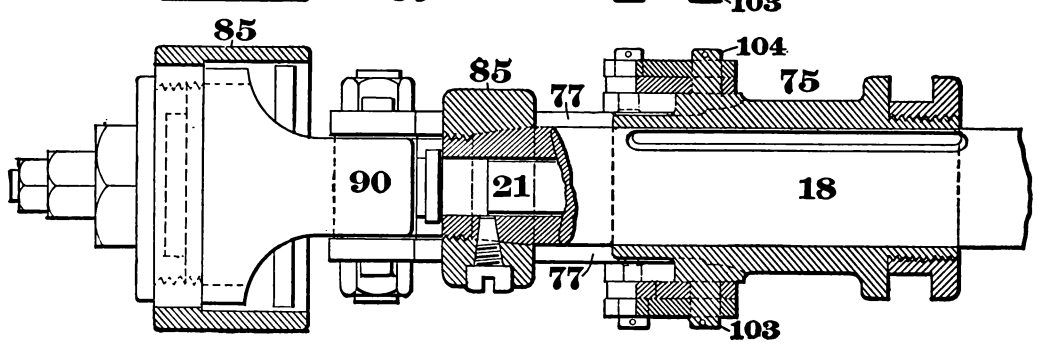

Fig. 26.

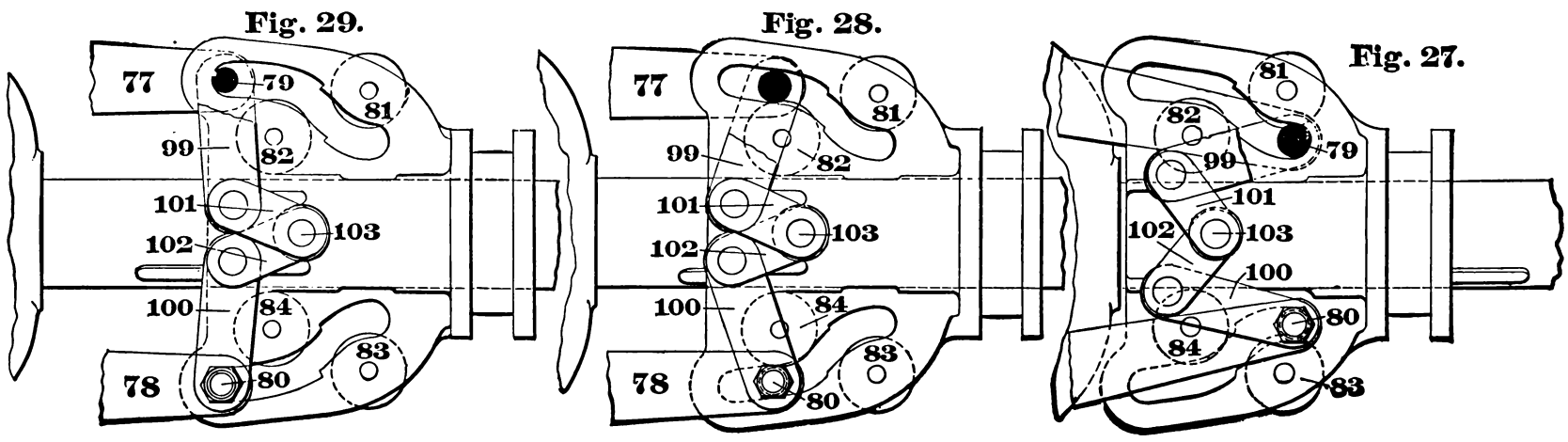

Fig. 29.

Fig. 28.

Fig. 27.

is a belt pulley, or pulley friction ring, keyed to the sleeve 12 on the pulley shaft, which is expanded at one end to form a cone clutch surface, and carries between the pulley and the expanded end a pinion gearing into the wheel 13. This wheel 13 drives the shaft 14, upon the other end of which is the pinion 15, driving the reversing feed wheel 16, which, in turn, drives the geared friction ring 17 in the opposite direction from 11 on the same driving shaft 18. 19 is the double-faced reversing cone, feathered on an enlarged portion of the pulley shaft 18, and connected by the cross-pin 20 with the operating rod 21, as previously shown and described in the patent. 22 is an abutment cone firmly attached to the pulley shaft 18, and 23 is a similar abutment cone screwed to the pulley shaft and locked in place by the nut 24 and collar 25.

It will thus be seen that the pressure exerted by the reversing cone 19 is transmitted to the abutment cone 22 or 23, and that the driving effect is augmented by the additional friction of the abutment cones. The combination of 19 and 22 with 11 and 12 forms one abutment clutch, and the combination of 19 and 23 with 17 forms another abutment clutch. It will also be observed that by means of the reduction gears from 12 to 17, the driving power of the latter is much greater than could well be realized by any pulley of reasonable size, and that both the forward and return motions of the table are accomplished by one and the same driving belt. Formerly, when collars on the shaft 18 occupied the places of the abutment cones, the heating and consequent expansion of the friction rings required an increase in the travel of the reversing cone to obtain the same driving effect, and as this could not be obtained without stopping the machine and readjusting the clutch shifting mechanism, the grip of the clutch and the driving power of the machine became less as the friction rings expanded. In this case the friction rings were metallic and expanded by the heat of friction, while the surfaces of the reversing cone were non-metallic, which would not transmit their heat to the metal which supported them. Therefore, the friction rings expanded while the reversing cone could not expand, and the grip of the clutches became less and less as the temperature increased.

It may easily be imagined that a reversal of these conditions, that is, a metallic reversing cone and friction rings with non-metallic surfaces, would have caused the clutches to tighten their grip as they became heated by friction ; but this would be equally objectionable, and it will now be observed that the introduction of abutment cones not only increases the capacity of the driving clutches, but also renders it possible at the same time to neutralize the effects of heat upon the driving power of the clutches. With this end in view, I make the exterior surfaces of the reversing cone 19 non-metallic, and the exterior surfaces of the abutment cones 22 and 23 metallic, and these conditions may be reversed with the same effect.

The friction surfaces are preferably wood and iron, but other materials may be used ; the point to be aimed at being as high a coefficient as possible without danger of cutting, and with the least amount of wear. That wear will take place in any case is, of course, unavoidable ; but with wood and iron, experience has shown it to be very slow. It is important, however, to maintain the clutches in their original and proper state of adjustment, which contemplates as little lost motion as possible. This is important, because lost motion between the clutches delays their time of action in the reversal of the machine, and impairs the efficiency of the spring at the end of the pulley shaft intended to limit the pressure on the reversing cone and check the inertia of the moving parts, before the grip of the clutch is tightened sufficiently to drive the table under cut. To accomplish this purpose, the abutment cone 23 can be screwed forward on the pulley shaft 18 and locked in position by the keyed collar 25 and its following nut 24.

The thread on the pulley shaft is of such inclination to the axis of the shaft on the abutment cone that it will tend to screw it against the collar 25 and hold it firmly in place. This adjustment for wear in the clutches disturbs the adjustment of the operating rod 21, which is corrected by screwing the rod as far as necessary into the pin 20, and clamping it in position by the nut 98. This nut draws the bushing 97, which is feathered on the rod 21, against the washer 95, which is feathered to the sliding block 90, and this, in turn, is drawn against the shoulder on the rod 21. To adjust the rod 21, the nut 98 is loosened, and the rod is then turned by a wrench on the bushing 97. By tightening the nut again, the feathered washer 95 is pinched between the bushing 97 and the shoulder on the rod 21, and the rod is held from turning in relation to the driving shaft by the friction of the surfaces against the washer 95.

The sliding block 90 carries the balancing springs 91 and 92, and is operated by the bell-crank levers 77, 77, and 78, 78, from the fulcrum block 75. These springs, although differently arranged, serve the purposes indicated in the aforesaid patent, so that a further account of their functions seems, at present, unnecessary.

It will be understood, without special illustration, that the countershafting required for a planer of this kind with a single driving belt is much simpler than that required for the former machine with two belt pulleys on the machine ; that the cutting power is much greater, and the space occupied much less.

26 is the spiral pinion keyed to the pulley shaft 18 and driving the spur wheel 27, as shown and described in the above mentioned former patent.

28 is a pinion connected with the reversing wheel 16 and driving the wheel 29 on the feed shaft 32.

30 is a stand bolted to the main frame 6 and carrying journals for the shafts 14, 18, and 31.

By means of the wheel 16, and pinions 28 and 29, the feed shaft 32 is brought down to the proper speed, which is necessarily much slower than that of the belt pulley 11 to give good results. The feed shaft 32 drives the escapement wheel 33, which, in turn, drives the feed wheels 34 and 35, as shown and described in the patent before mentioned referred to. These wheels make half a revolution at each end of the table stroke when the machine is in operation, and an independent feed for vertical slide and extra saddle is obtained by driving across the bed through the wheels 36 and 37 and the shaft 38.

39 is the engaging member of the escapement, which is held in check by the lug 41 against the sliding stop 42.

40 is a clutch keyed to the shaft 32 and provided at its outer end with teeth engaging with the bevel wheels 43 and 44. These wheels turn in opposite directions upon the conical friction surfaces of an operating cone 45 and abutment cones 46 and 47, all keyed to the reversing rock shaft 48, which carries the shifting fork 49. The shaft 48 is hollow to admit the rod 50, which has a quick pitched thread cut at one end working in the nut 51, and grooves or collars opposite the clutch 45, with which it is connected by the keys 52, 52. It will now be seen that rotation of the rod 50, by means of the hand lever 53, to control the movements of the table by hand, will move the clutch 45 in either direction and cause either 43 or 44 to drive the shaft 48 by friction. This shaft carries the crank 67, which by the rod 73 connects with the lever 74, which, in turn, transmits its movements to the fulcrum block 75, and through the rod 21 to the driving friction clutches.

54 is a friction cone keyed to the shaft 48, and 55 is a clutch loose on 48 engaging with 54 by the pressure of the spring 56. The clutch 55 connects with the sliding stop 42 to release the escapement, and also by the slotted link 57 with the arm 58 keyed to the shaft 59.

When the arm 58 is in the position shown, Fig. 16, the slot in the link 57 allows the stop 42 to move to and fro by the action of the clutch 55 and release the escapement without moving the arm 58. The stop 42 has a limited movement equal to the lost motion in the slot of 57, and when the shaft 59 is rotated by the lever 60, the pin in arm 58 can be made to press against either end of the slot in 57 and hold the stop 42 in a fixed position, so that the cone 54 will slip in clutch 55 and have no effect.

To hold the lever 60 in a central position, and in its two extreme positions, bevelled notches are cut in the stand 61 to receive a corresponding pin 62 on the lever 60, which is made to bear against the notch in any position by the spring 63 on the shaft 59. By pushing or pulling on the lever 60 the pin 62 can be made to slip out of its notch, but when latched in any of its positions the re-

sistance of the notch is sufficient to overcome the friction of the clutch 54.

The shafts 50 and 59 are both extended across the bed and fitted with the hand levers 64 and 65, respectively, so that the machine may be operated with equal facility from either side.

The rock shaft 48 is held in a central position when the table is at rest by the centring tumbler 66 and the arm 67, shown particularly in Figs. 16, 17, 18, and 19.

The tumbler 66 is provided with two pins which rest against corresponding notches in the arm 67 and are pressed toward the latter by the spring 69 through the bell-crank lever 68. It is evident that when in the position shown in Fig. 17, the spring 69 will be compressed by movement of the arm 67 in either direction and that the shaft 48 is held thereby in stable equilibrium. It is also evident that as the arm 67 approaches its central position in either direction, it will be assisted by the spring 69, and therefore, that the device shown is a safeguard against carelessness in leaving the rock shaft stand away from the central position which it must assume to prevent the clutches on the pulley shaft from rubbing when not in service. In the other three positions of the tumbler 66, it acts to hold the arm 67 away from its central position, and thereby assists in each case to keep the operating clutch engaged as desired. The tumbler acts, therefore, to hold the operating clutches both in and out of action. A similar device indicated at the point 70, not shown in detail, is attached to the rod 50 to bring the levers 53 and 64 back to a central position, and free the clutches on the reversing rock shaft when not in service.

71 and 72 are the forward and return motion forks pivoted to the bed and actuated by the ordinary stops on the table. These forks engage with the fork 49, fastened to the rock shaft 48, which connects through the arm 67 and rod 73 with the levers 74, 74, which move the sliding fulcrum block 75 on the pulley shaft.

At the same time, when the hand levers are set as shown in Fig. 16, the rotation of the rock shaft 48 moves the stop 42 and releases the escapement, which in making half a turn, moves the cam 76 as shown and described in the before mentioned former patent, and drives home the fulcrum block 75 on the pulley shaft, setting the clutches for the next stroke of the planer, and operating the feed.

While the machine is running automatically, the hand levers 53 and 60 and 64 and 65 are at rest in a vertical position, as in Fig. 16. To stop the machine, the first operation is to push the lever 60 or 65 as far as either will go in the direction the table is moving. Then when the table reaches the end of its stroke, it will stop by the action of the table stop. If desired to stop sooner, the hand lever 53 or 64 must be employed to disengage the driving clutches. Having stopped the table by disengaging the driving clutches, the lever 53 or 64 may be used to move the table to any position desired, without moving the escapement; and at any time the automatic action can be restored by moving the lever 60 or 65 past its middle position to trip the escapement; and then bringing it back to its middle position and locking it there. The position of this lever, when moved either side of its central position to disengage the feed, shows the direction of the last stroke taken under feed. In such machines heretofore constructed, the hand levers move with great rapidity and force, and are a constant menace to the safety of the workman. On large machines the force required to move the rock shaft directly is sometimes more than a man of average strength can exert, but with the bevel wheel clutches herein shown and described, the force on the hand lever need be no more than that required directly on the smallest machines.

The shifting mechanism on the pulley shaft shown, embodies new and important improvements in the direction of greater freedom, ease of working, equalization of pressure on clutch rod levers, and in positions of stable equilibrium. 75, before mentioned, is the sliding fulcrum block, with cam slots for the pins connecting the clutch rod levers 77, 77 and 78, 78.

The pins 79 and 80 in these levers act against the rolls 81, 82, 83, and 84 as the sleeve 75 is shifted on the pulley shaft. The yoke 85, fastened to the end of the pulley shaft 18, carries the fulcrum blocks 86, 87 with the pins 88, 89 for the levers 77, 77 and 78, 78 to turn upon. The clutch rod 21 carries a sliding block 90, inclosing the springs 91 and 92, and connected to the levers 77, 77 and 78, 78 by the pins 93 and 94. The springs 91 and 92 act on opposite sides of a collar 95 on the rod 21, which collar is loose on the rod and keyed to the sliding block 90. The ring 96 is screwed in 90 when the springs are inserted, and the bushing 97, which is feathered to the rod 21, is followed up by the nut 98, by which 97 and 95 are jammed against the shoulder on 21. It will be seen from this that the same system of balancing springs obtains as shown in the aforesaid former patent, but in a modified form, which simplifies and perfects the adjustments required. Adjustment for wear being now effected by the abutment cone 23 with its following nut 24 and collar 25, the action of the balancing springs is no longer disturbed thereby, and they have, therefore, been inclosed beyond the reach of the operator, leaving but one adjustment to be made at the end of the pulley shaft to regulate the grip of the forward motion clutch. By this arrangement, the balancing springs, when once properly adjusted, will remain so, and the operator is required only to take up the lost motion as it occurs in the driving clutches and adjust the grip of the driving clutch for the work required.

It is evident that as the fulcrum block 75 is moved in either direction from the position shown in Fig. 24, the levers 77 and 78 will cause the rod 21 to move in the same direction with increased force and diminished movement.

When 75 is moved to the position shown in Fig. 27, the pin 79 passes under the roll 81 beyond the line of centres and holds itself in place until pulled out by some external force, compressing the spring 92 and causing the clutches for return motion to be engaged. These rollers aid greatly in reducing friction and increasing freedom of movement, but movement in the opposite direction, which requires much greater pressure to fully engage the clutches, is accomplished by a still further reduction in friction under the maximum pressure. When moved to the position shown in Fig. 28, the forward motion clutches are engaged by the pressure of the spring 91 to check the motion of the table and start it forward before the full pressure is applied for cutting. This position is also one of stable equilibrium, for the pin 79 is beyond the centre of the roll 82 and resting against the links 99, 99, which abut against their mates 100, 100 and equalize the pressure on the links 77, 77 and 78, 78. These links are firmly attached to their pins 79 and 80 and are held at the other ends by the links 101, 101 and 102, 102 attached to 75 by the pins 103 and 104. Finally, the sleeve 75 moves to the position shown in Fig. 29, straightening the toggle links 99, 99 and 100, 100 a little beyond the line of centres, making the third position a stable equilibrium. In addition to the security in position thus effected, the mechanism shown in Figs. 27, 28, and 29 supplements the tendency of the fulcrum block to maintain the several positions required of it.

The device for transmitting and arresting motion shown in Fig. 11, and referred to in this application as the escapement, is designed not only to prevent shock in starting and stopping, but also to effect the starting and stopping of the driven member at the same angular position.

105, Fig. 11, is a heavy spring compressed between the driven member 33 and the engaging member 39, which are screwed together as shown by quick pitch threads having a certain amount of lost motion in the direction of their common axis. The pitch of the screw is so steep that when the lug 42 is withdrawn from the stop 41, the engaging member 39 will be rotated by the pressure of the confined spring 105. The friction surfaces on 39 and 33 will then be in driving contact under spring pressure, and 33 will be started by the friction due to that limited pressure, before the lost motion in the screw is taken up when the drive becomes positive. When the engaging member is arrested by contact with the stop 42, the driven member 33 continues in motion until the lost motion in the screw is taken up, and the inertia of the feed train then expends itself in compressing the spring 105. This separates the driving surfaces, and a retaining catch 106, applied to the feed disk 107, or any convenient part of the feed train, prevents the reaction of the spring from again producing contact until the stop 42 is withdrawn from the lug on 39. This catch is represented as engaging by friction in a groove

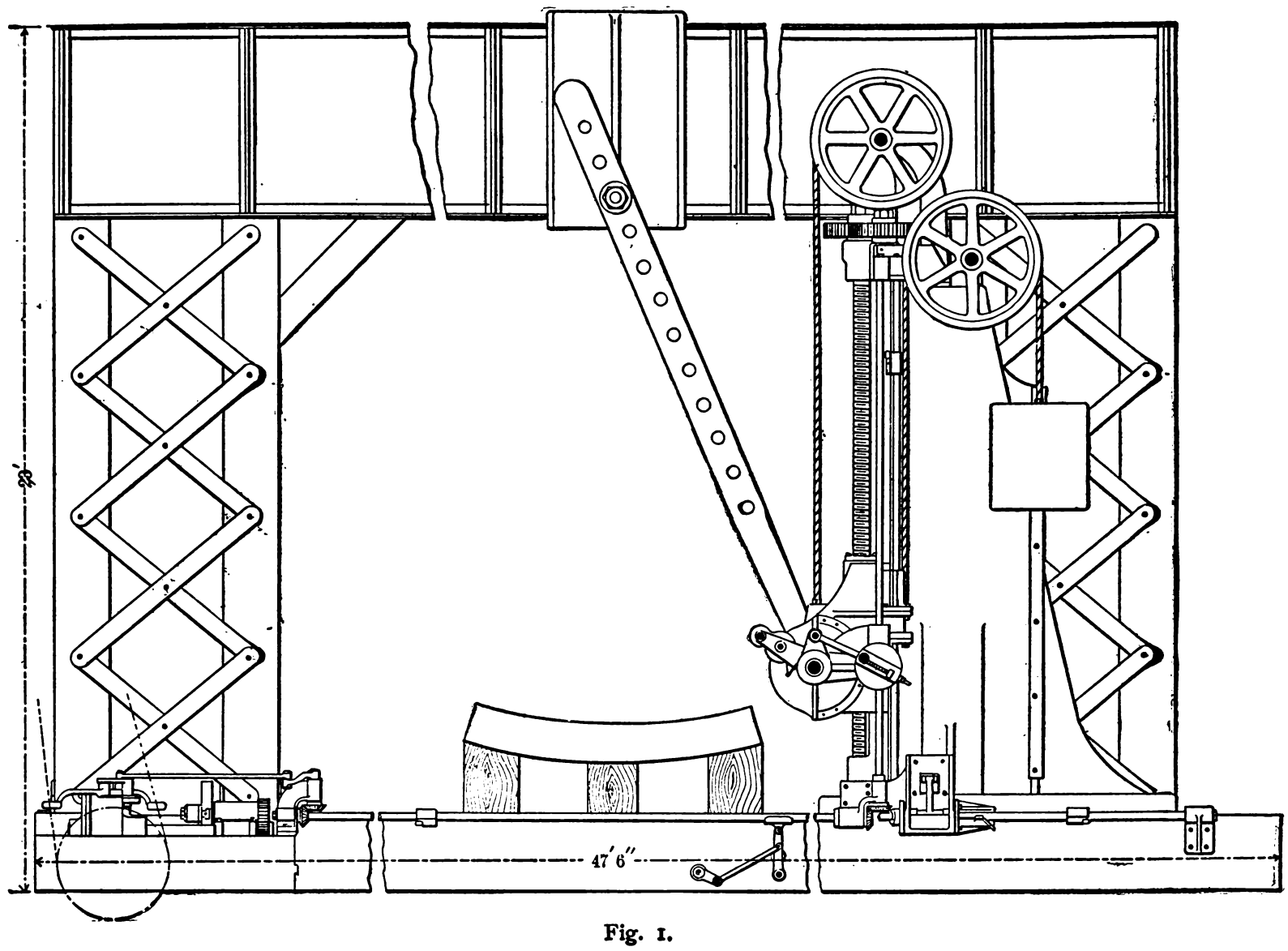

Fig. 1.

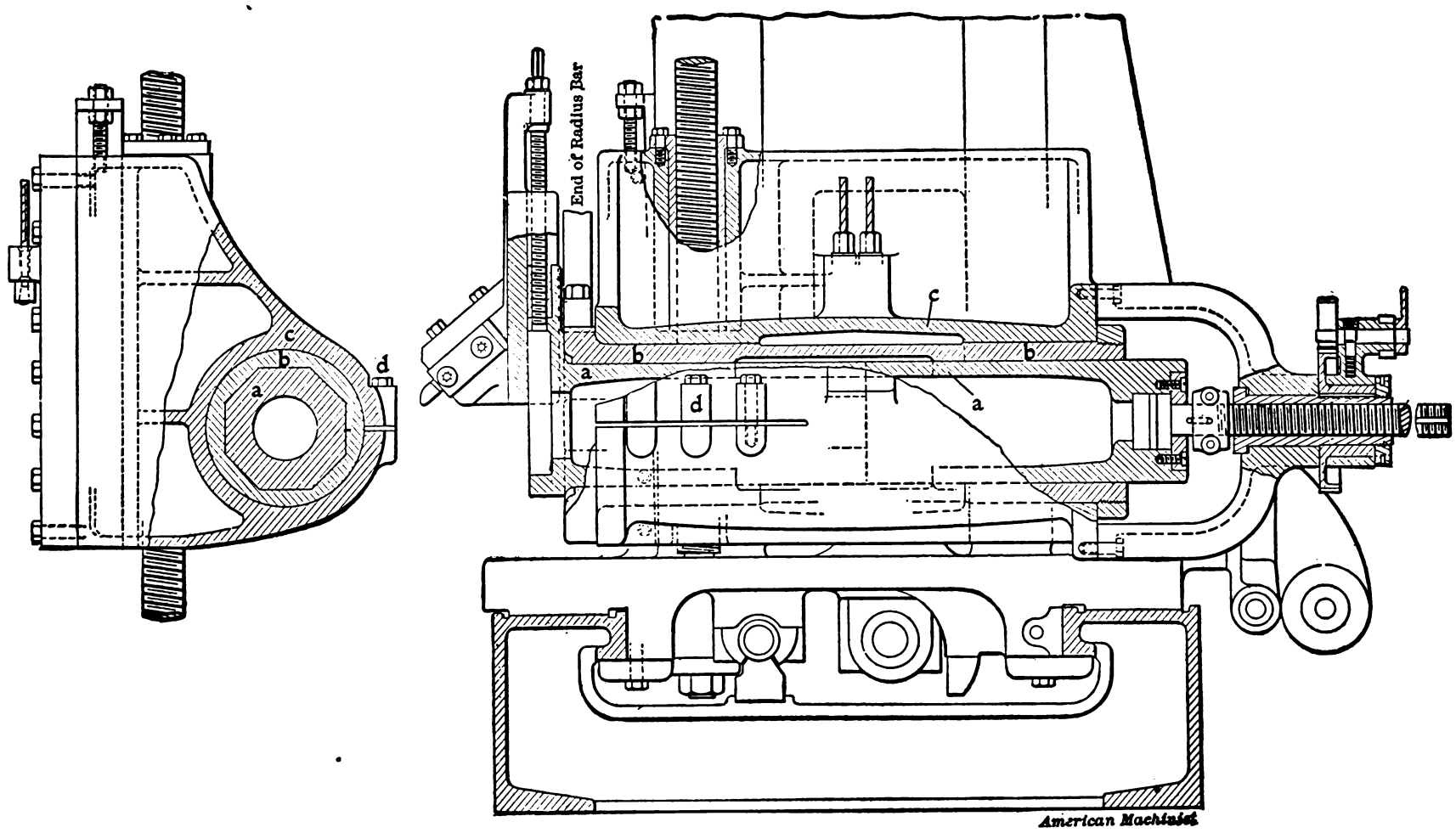

Fig. 2.

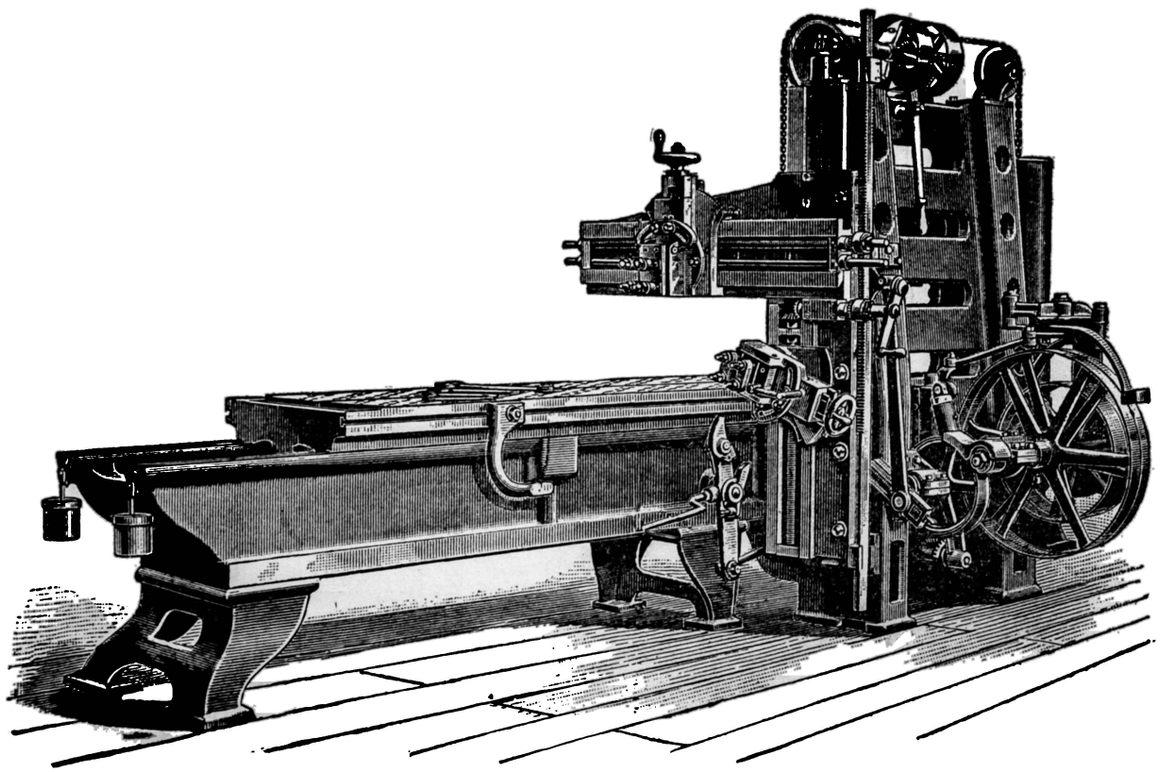

Fig. 1.

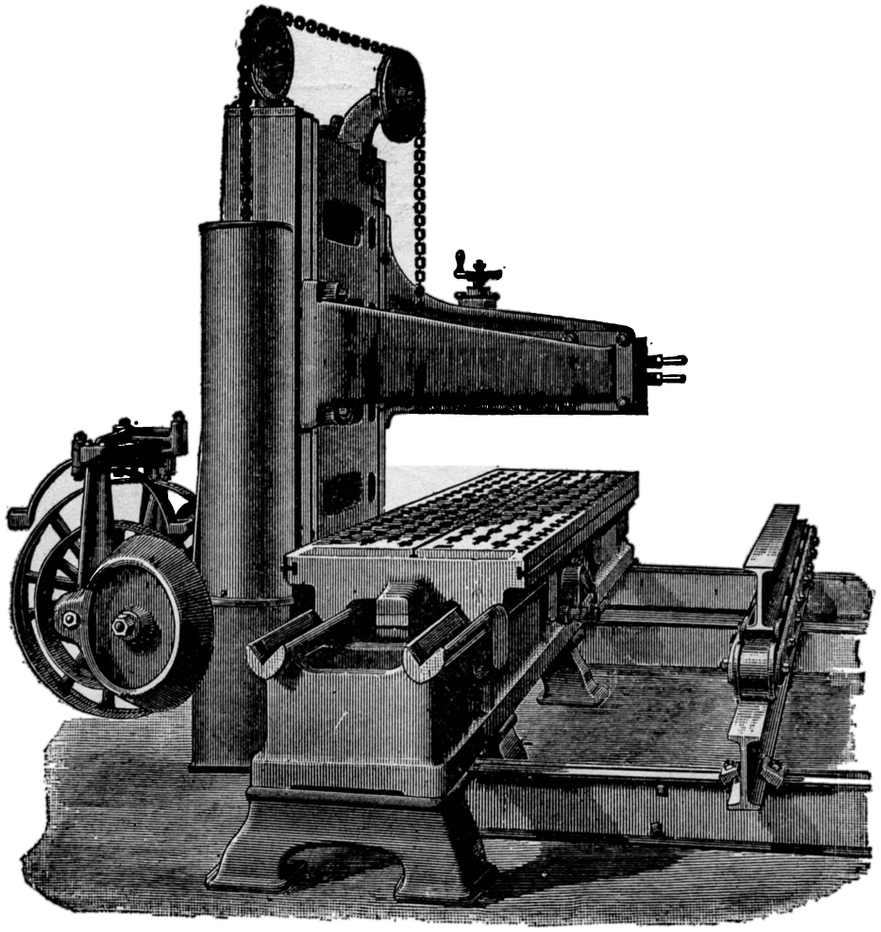

Fig. 2.

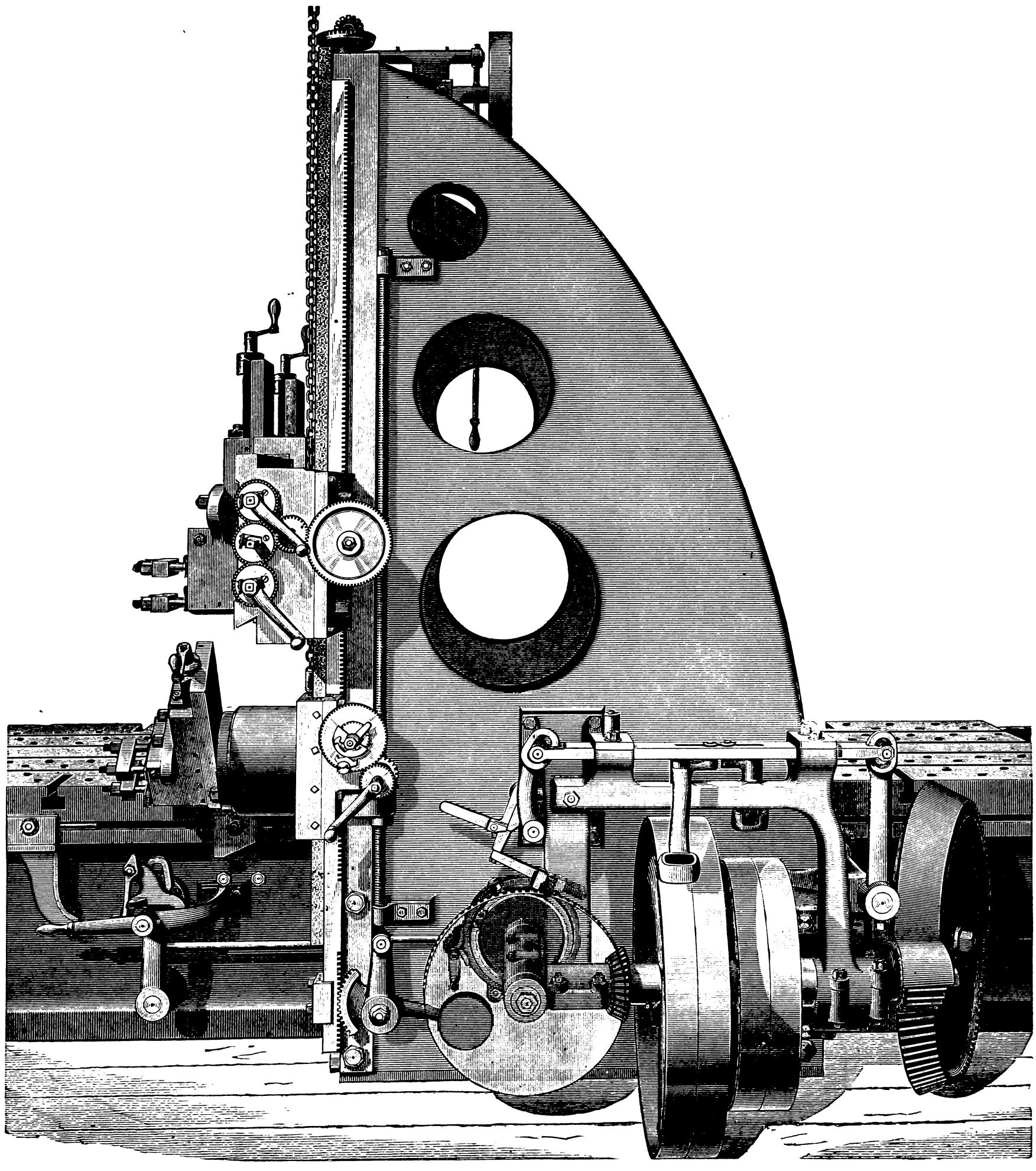

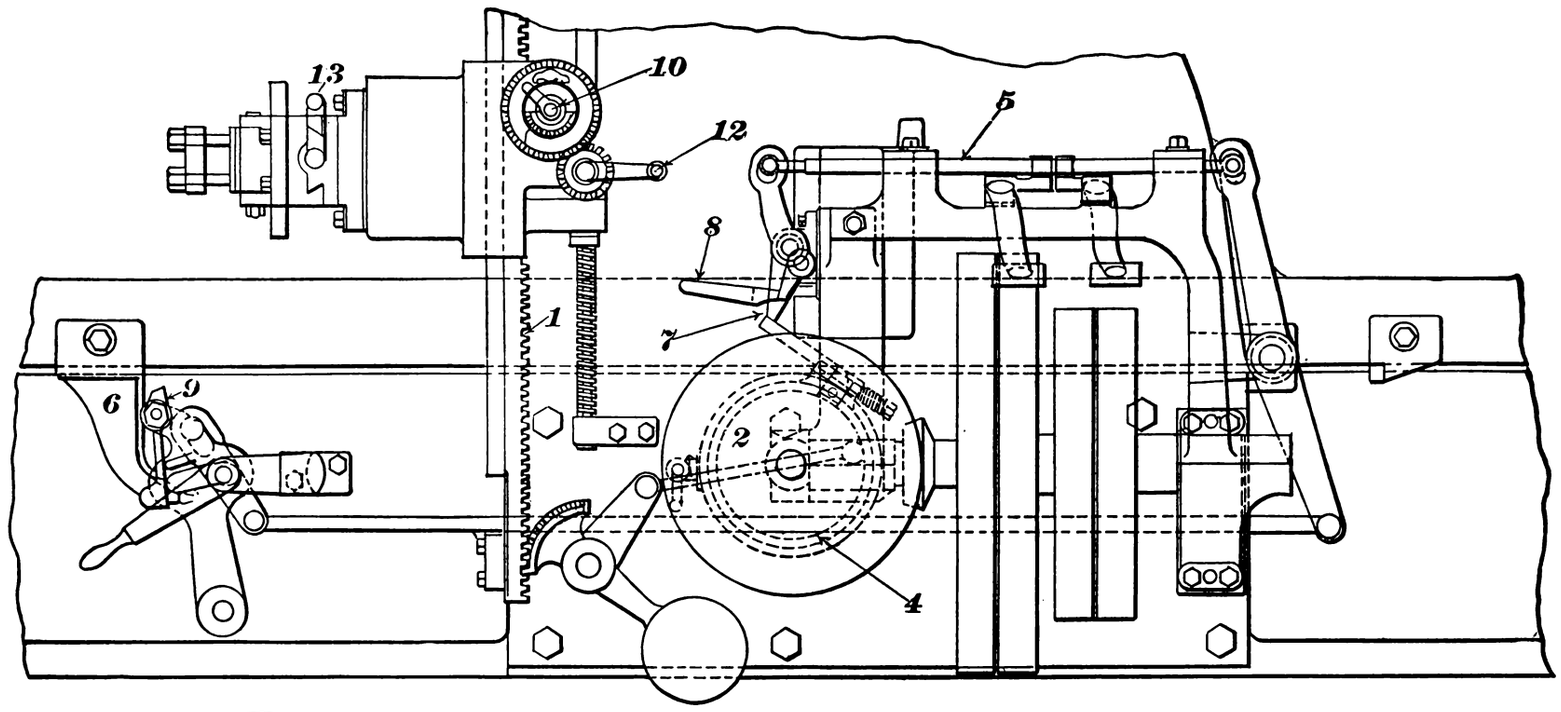
13
10
12
5
8
1
7
6
9
2
4

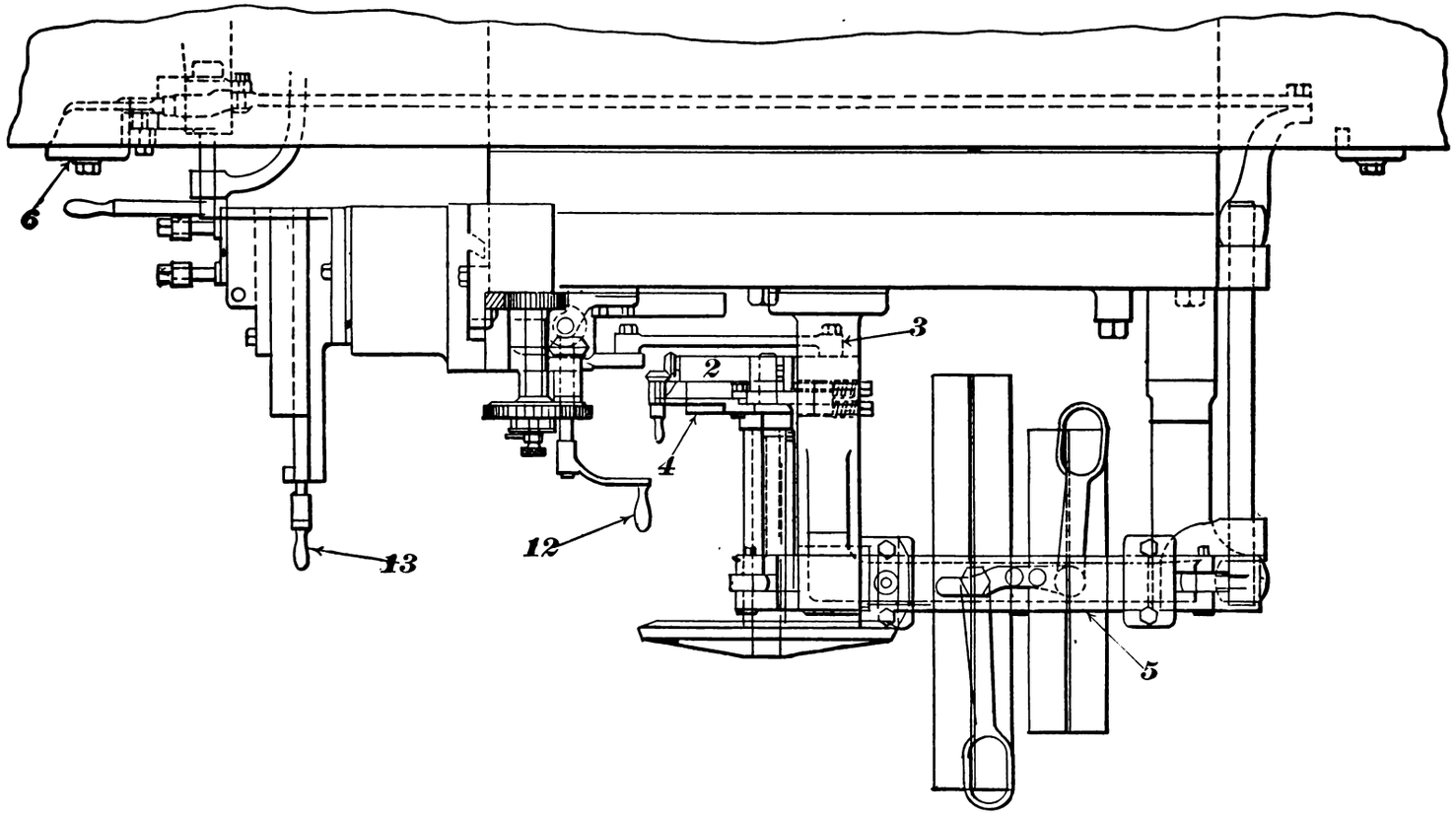
3
2
4
12
13
5

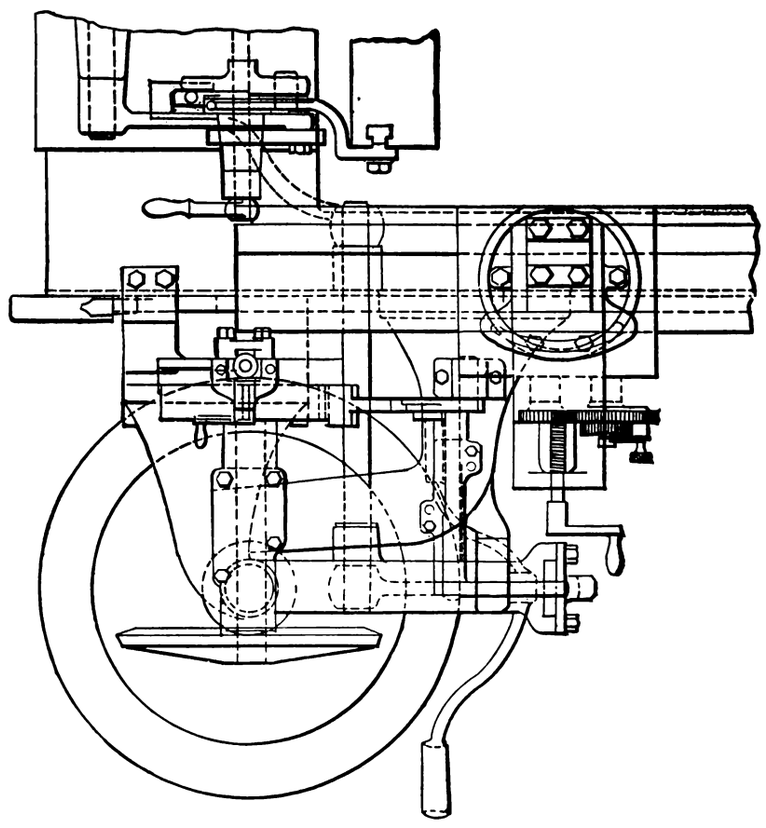

turned in 107, but a common pawl, or retaining brake, might be employed, the particular form of catch being immaterial to the present invention; and as the escapement with its retaining catch forms the subject matter of another patent, it is unnecessary to enlarge further herein upon its operation.

POST PLANING MACHINE.*—A large post or vertical planing machine, designed and constructed by Bement, Miles & Co., of Philadelphia, Pa., is illustrated in Fig. 1572*a* and Figs. 1 and 2, Plate LXXXIII.–D. Fig. 1572*a* is a general view of the machine, in which the tool head is operated vertically, the work lying stationary.

The machine, moreover, is arranged to give either a horizontal cutting stroke by the sliding of the post upon the bed, or a vertical cutting stroke by the movement of the head upon the post.

In order to accommodate the two directions of the tool movement, and also to accommodate an additional movement to be described presently, the tool box is mounted, as shown in length-

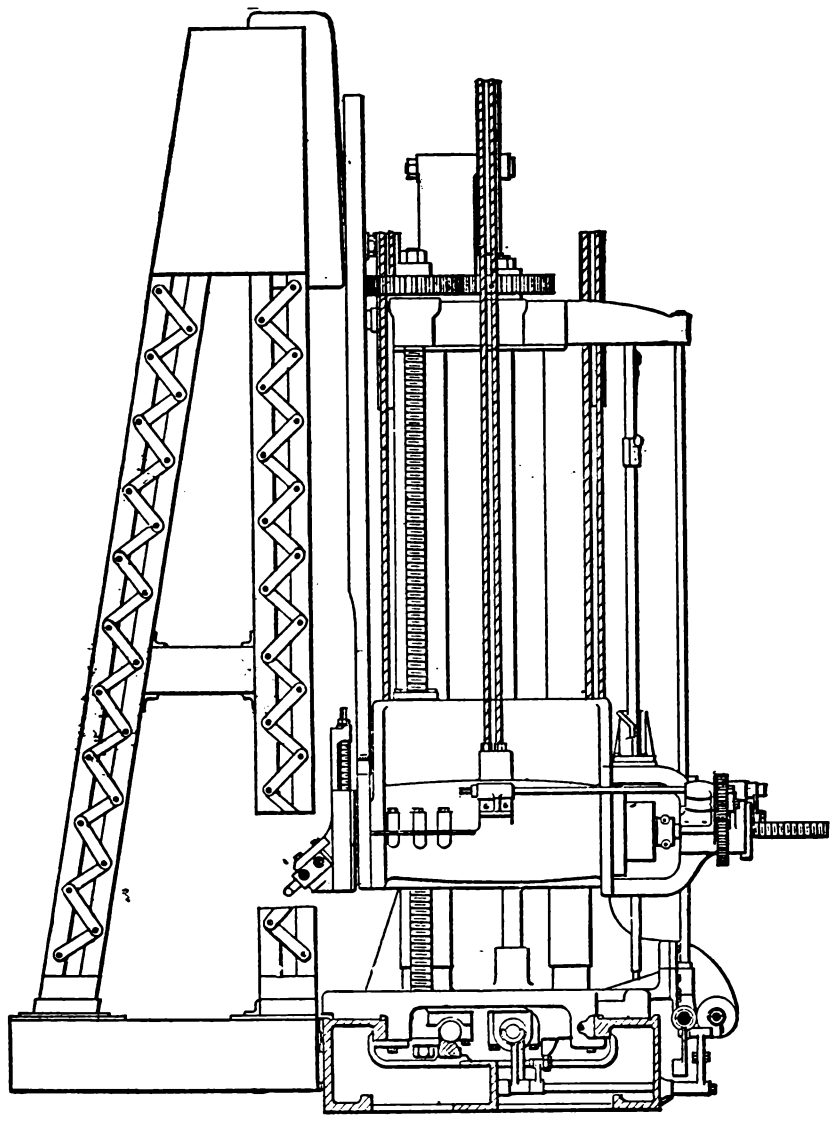

Fig. 1572*a*.

wise and crosswise section in Fig. 2, upon an octagonal bar *a*, by which it is slid inward and outward in order to accomplish the feed in that direction, and this bar is placed within a cylindrical sleeve *b*, which can turn within sleeve *c* and be clamped in any position by means of the clamping bolts *d* seen upon its side. By means of the adjustment provided by this sleeve, the tools are made to face in their proper direction for either the horizontal or the vertical cutting stroke. The tool box is, moreover, made to carry tools facing in both directions, so that cutting is done both going and coming. Of course, under the various conditions of work, a gravity return of the tool clappers could not be depended upon, and, consequently, a spring return has been inserted in the tool box. The additional movement referred to above will be seen in Fig. 1, which shows a riveted iron structure placed over the machine with a sliding adjustable head thereon and a radius bar connecting it with the tool head. Provision is made for releasing the tool head from the vertical driving screw and for placing it under the control of the radius bar, whereby the planing of the rabbeted joints upon the bottoms of ships' turrets may be accomplished. This radius bar is attached to the head of the sleeve previously described, as shown in Fig. 1, and when used in this way the clamping bolts for this sleeve are slackened, thereby enabling the tool head to turn about its own axis and maintain a proper clearance angle to the tool.

Both horizontal and vertical movements have cutting speeds of 4, 8, 12, and 16 feet per minute, and feeding speeds in addition, so that the machine may be used either way, according to convenience. The traverse of the post on the bed is 30 feet, and of the saddle on the post, 8 feet; while the horizontal movement of the octagonal cutter bar is 28 inches. The feeds of the saddle are automatic in both directions from one-twentieth to eight-tenths of an inch, and of the octagonal cutter bar horizontally, one forty-fourth to one-fourth of an inch. Hand adjustments are also provided for the lengthwise movement of the octagonal bar and for the tool box slide, for which the means will be apparent from the illustrations.

DETRICK AND HARVEY OPEN SIDE PLANER.—The open side planer, manufactured by the Detrick & Harvey Co., of Baltimore, Maryland, is illustrated in Figs. 1 and 2, Plate LXXXIII.–E.

A comparatively small machine of this type will plane a great variety of work which would necessitate a much larger machine of the regular style.

To drive these planers, the Sellers spiral planer motion is used, which for power, simplicity, durability, and smooth running qualities is familiar to the mechanical world.

The cross beam is supported by a brace rigidly bolted back of the post. This post takes a bearing on the bed equal in length to one and a half times the amount of overhang of beam. The head or beam has automatic feeds in all directions. The beam and brace are raised and lowered by power.

The table reverses promptly and without jar, the belt shifters transferring one belt at a time, thus obviating noise of belts. The return speed is to cutting speed as four to one and three to one, varying with the size of the planer. The reversing lever is arranged to allow the table to be run back to examine the work without loosening the dog.

Plates LXXXIV. and LXXXV. represent a planing machine made by the G. A. Gray Co.

The spiral gear driving the mechanism is in its essential features the same as used in the Sellers planers.

In the feeding device the vertical motion to the feed rack (1) is produced by a crank plate (2) which revolves always in the same direction, instead of the backward and forward motion generally used. The crank plate has the usual adjustable stud (3) for varying the stroke of the rack. The feeding of all the heads is accomplished immediately after the cut is completed, and cannot by any accident take place during the cutting of the tools. The crank plate receives its motion through a friction clutch (4), which is liberated at the moment the shift plate (5) is acted upon by the forward dog (6), and at the same time the belts are changed from the cutting motion to the backing motion. The crank plate is allowed to make one complete revolution and is then arrested by the stop (7), which falls into place and is then in position to be thrown out again at the end of the next cut. At the same time, when the crank plate is arrested, the friction is thrown out and those parts employed to drive it are allowed to revolve free, and during the cut stand still, relieving the machine entirely of an unnecessary load.

All the heads are provided with the usual ratchet devices for reversing and stopping the feeds of that particular head, and in addition to this there is a lever (8) for throwing out and in all the heads at once, that the motion of the platen may be controlled by hand after the cut of any particular head has been adjusted, without doubling the feeds and causing marks in the work. The rear side of the platen is supplied with an extra pair of dogs, which work in conjunction with an independent shifter and trip same as shown on front side at (9), thus enabling the operator to control the action of the machine from both sides.

The feed device (10) on the side heads has an independent adjustment, and may be varied without disturbing those on the cross

* *American Machinist*, Oct. 21, 1897.

rail. The elevating of the cross rail is effected by means of a friction clutch.

All the feed connections adjust themselves as the cross rail is moved up and down, as they are all engaged with the vertical rack. The hand cranks (12) and (13) are attached to the side head and move with it, and are consequently always within easy reach of the operator.

Plate LXXXVI. represents a planing machine designed and constructed by the G. A. Gray Co., and having, besides the usual feed motion to the four heads, the special feature that both the side heads may be moved by hand and the feeds thrown in or out without the operator moving from his proper position at the side of the machine.

These side heads have swivels, and are brought forward to a line with the heads on the cross slide; this provides for all four tools starting and leaving the cut at the same time.

Plate LXXXVII. represents a planer by the Fitchburg Machine Works. There are two tool heads on the same cross bar, each of them having its separate cross feed and feed motion. The cross bar, however, is sufficiently long (extending beyond the housing at the back of the machine) to admit of one tool head being moved out of the way to admit of the other head traversing entirely around the work table or platen when required to do so. An extra head is placed in the front housing, and has an automatic vertical feed.

PLANER SLIDING HEADS.—In order that the best work may be produced, it is essential that the sliding head of a planer or planing machine be constructed as rigid as possible, and it follows that the slides and slideways should be of that form that will suffer the least from wear, resist the tool strain as directly as possible, and at the same time enable the taking up of any wear that may occur from the constant use of the parts.

Between the tool point that receives the cutting strain and the cross bar or cross slide that resists it there are the pivoted joint of the apron, the sliding joint of the vertical feed, and the sliding joint of the saddle upon the cross slide, and it is difficult to maintain a sliding fit without some movements or spring to the parts, especially when, as in the case of a planer head, the pressure on the tool point is at considerable leverage to the sliding surfaces, thus augmenting the strain due to the cut.

The wear on the cross slide is greater at and towards the middle than at the ends, but it is also greater at the end nearest to the operator than at the other end, because work that is narrower than the width of the planing machine table is usually chucked on the side nearest to the operator or near the middle of the table width, because it is easier to chuck it there and more convenient to set the tool and watch the cut, for the reason that the means for stopping and starting the machine, and for pulling the feed motions in and out of operation, are on that side.

The form of cross bar usually employed in the United States is represented in Fig. 1573, and it is clear that the pressure of the cut is in the direction of the arrow *c*, and that the fulcrum off which the strain will act on the cross bar is at its lowest point *d*, tending to pull the top of the saddle or slider in the direction of arrow *e*, which is directly resisted by the vertical face of the gib, while the horizontal face *f* of the gib directly resists the tendency of the saddle to fall vertically, and, therefore, the amount of looseness that may occur by reason of the wear cannot exceed the amount of metal lost by the wear, which may be taken up as far as possible by means of the screws *a* and *b*, which thread through the saddle and abut against the gib. The gib is adjusted by these screws to fit to the least worn and therefore the tightest part of the cross bar slideway, and the saddle is more loosely held at other parts of the cross bar in proportion as its slideway is worn.

In this construction the faces of the saddle are brought to bear over the whole area of the slideways surface of the cross bar, because the bevel at *g* brings the two faces at *m* into contact, and the set-screw *b* brings the faces in together. Instead of the screws *a* and *b* having slotted heads for a screw driver, however, it is preferable to provide square-headed screws, having check nuts, as in Fig. 1574, so that after the adjustment is made the parts may be firmly locked by the check nuts, and there will be no danger of the adjustment altering.

The wear between the slider and the raised slideways S is taken up by gibs and screws corresponding to those at *a* and *c* in the Fig. 1575, and concerning these gibs and screws J. Richards has pointed out that two methods may be employed in their construction, these two methods being illustrated in Figs. 1575 and 1576, which are taken from "Engineering."

In Fig. 1575 the end *s* of the adjustment screw *a* is plain, and is let into the gib *c* abutting against a flat seat, and as a result while the screw pressure forces the gib *c* against the bevelled edge of the slideway it does not act as to draw the surfaces together at *m m* as it should do. This may be remedied by making the point of the screw of such a cone that it will bed fair against gib *c*, without passing into a recess, the construction being as in Fig. 1576, in which case the screw point forces the gib flat against the bevelled face and there is no tendency for the gib to pass down into the corner *e*, Fig. 1575, while the pressure on the screw point acts to force the slide *a* down upon the slideway, thus giving contact at *m m*.

The bearing area of such screw points is, however, so small that the pressure due to the tool cut is liable to cause the screw to indent the gib and thus destroy the adjustment, and on this account a wedge such as shown in Fig. 1577 is preferable, being operated endwise to take up the wear by means of a screw passing through a lug at the outer or exposed end of the wedge.

The corners at *i*, Figs. 1575 and 1576, are sometimes planed out to the dotted lines, but this does not increase the bearing area between the gib *c* and the slide, while it obviously weakens the slider and renders it more liable to spring under heavy tool cuts.

Fig. 1578 represents a form of cross bar and gib found in many English and in some American planing machines. In this case the strain due to the cut is resisted directly by the vertical face of the top slide of the cross bar, the gib being a triangular piece set up by the screws at *a*, and the wear is diminished because of the increased wearing surface of the gib due to its lower face being diagonal.

On the other hand, however, this diagonal surface does not directly resist the falling of the saddle from wear, and furthermore in taking up the wear the vertical face of the saddle is relieved from contact with the vertical face of the cross bar, because the screws *a* when set up move the top of the saddle away from the cross bar, whereas in Fig. 1573, setting up screw *b* brings the saddle back upon the vertical face of the cross bar slideway.

Fig. 1579 is a front view, and Fig. 1580 a sectional top view, of a sunk vertical slide, corresponding to that shown in Figs. 1573 and 1578; but in this case the gib has a tongue *t*, closely fitted into a recess or channel in the vertical slider S, and to allow room for adjustment, the channel is made somewhat deeper than the tongue requires when newly fitted. The adjustment is effected by means of two sets of screws, *a* and *b*, of which the former, being tapped into the gib, serve to tighten, and the latter, being tapped into the slide, serve to loosen the gib. By thus acting in opposite directions the screws serve to check each other, holding the gib rigidly in place. To insure a close contact of the gib against the vertical surface of the slide, the screws *b* are placed in a line slightly outside of the line of the screws *a*.

Fig. 1581 represents a similar construction when the slideways on the swing frame project outwards, instead of being sunk within that frame.

Fig. 1582 represents the construction of the Pratt & Whitney Company's planer head, in which the swivel head instead of pivoting upon a central pin and being locked in position by bolts whose nuts project outside and on the front face of the swing frame, is constructed as follows:—

A circular dovetail recess in the saddle receives a corresponding dovetail projection on the swivel head or swing frame, and the two are secured together at that point by a set-screw A. In addition to this the upper edge B of the saddle is an arc of a circle of which the centre is the centre of the dovetail groove, and a clamp is employed to fasten the swivel head to the saddle, being held to that head by a bolt, and therefore swinging with it. Thus the swivel head is secured to its saddle at its upper edge, as well as at its centre, which affords a better support.

The tool box is pivoted upon the vertical slider, and is secured

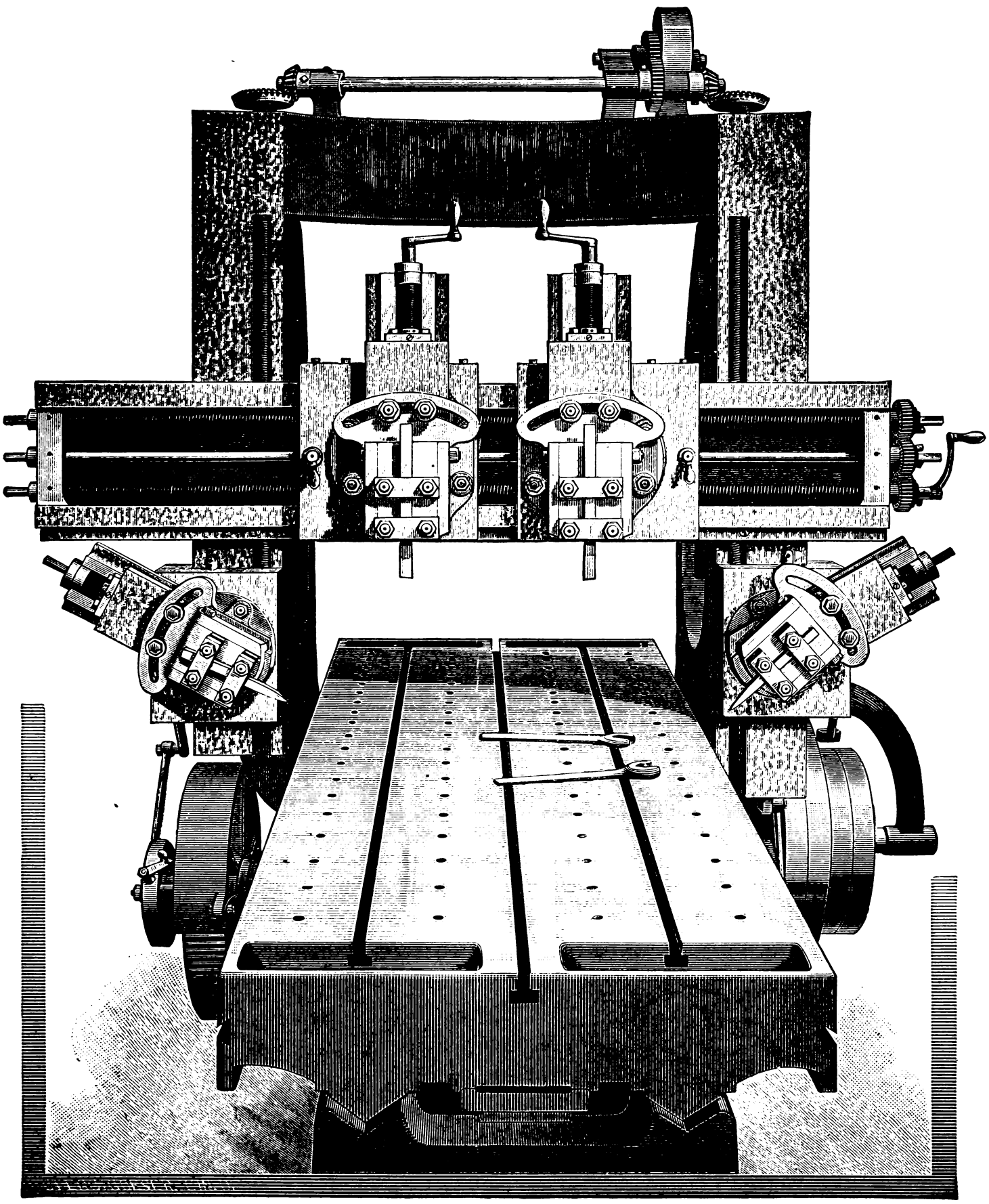

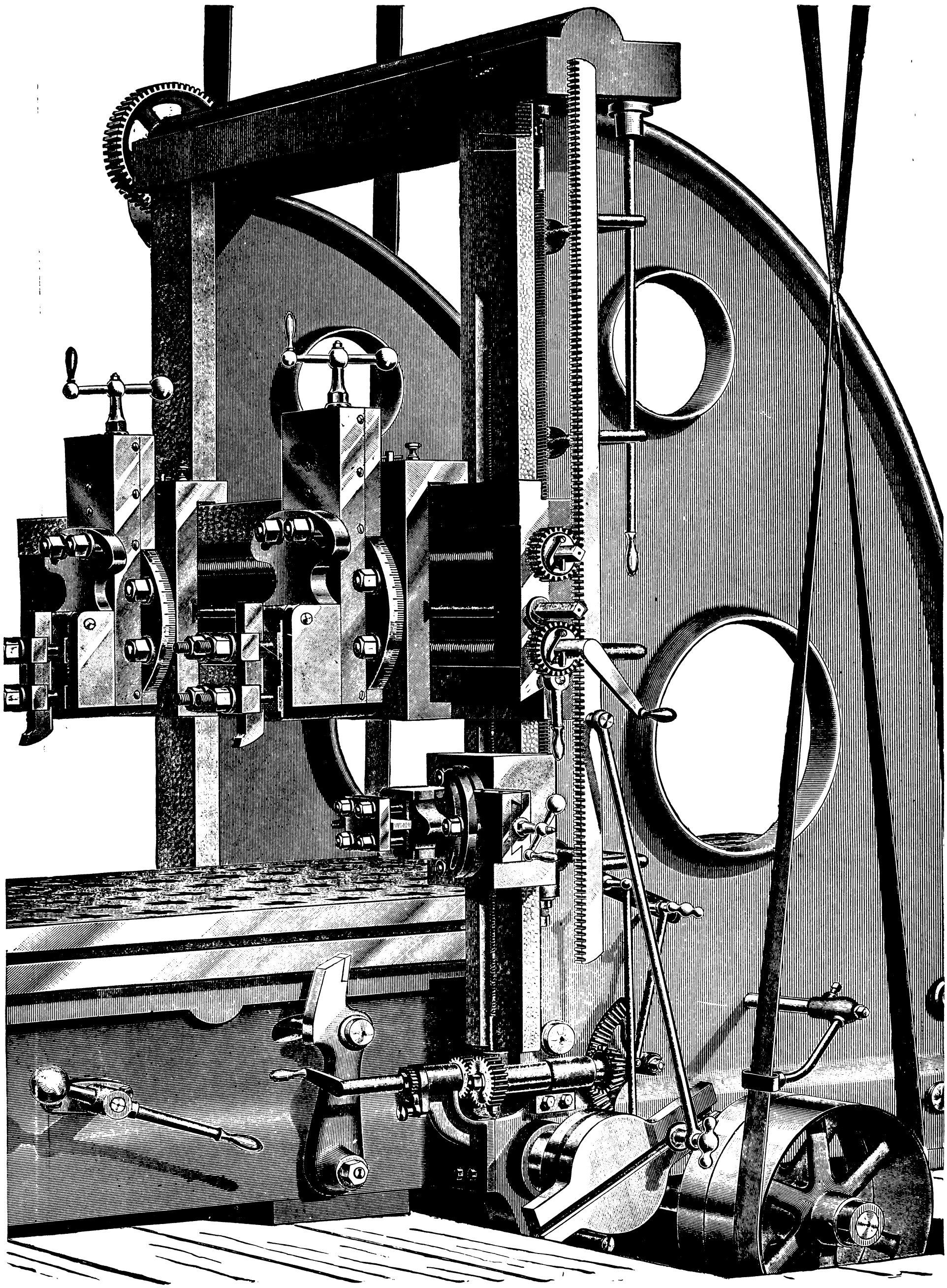

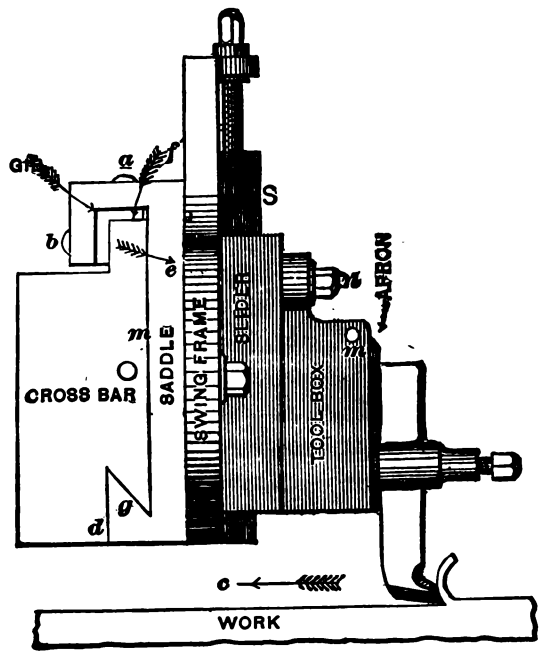

Fig. 1573.

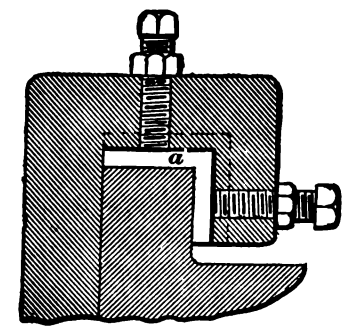

Fig. 1574.

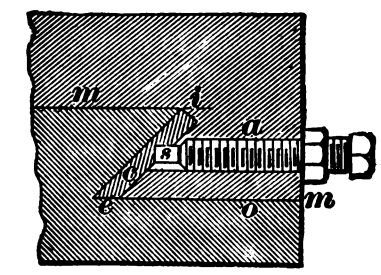

Fig. 1575.

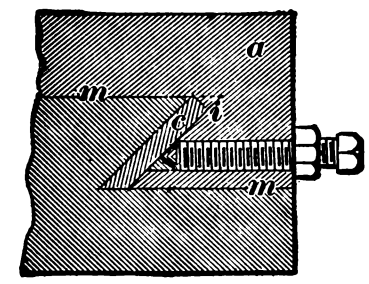

Fig. 1576.

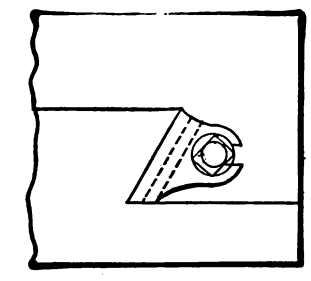

Fig. 1577.

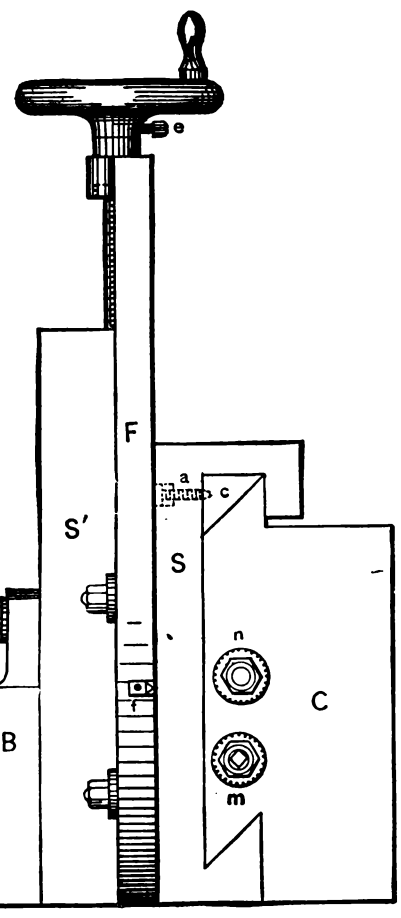

Fig. 1578.

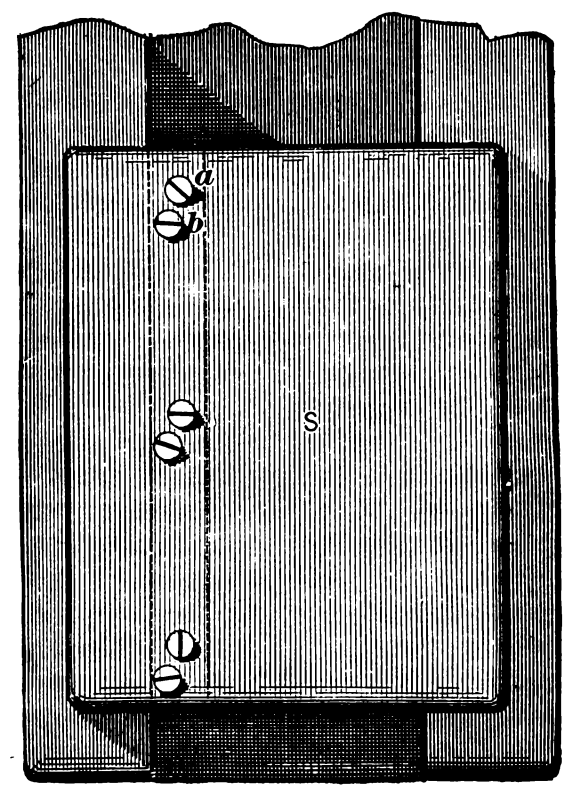

Fig. 1579.

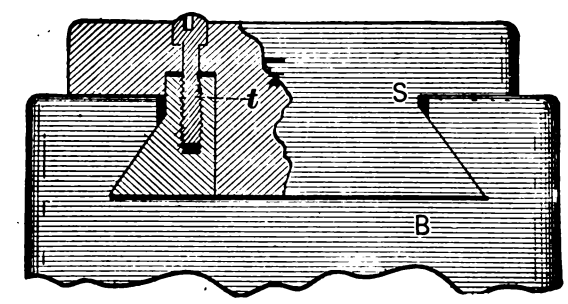

Fig. 1580.

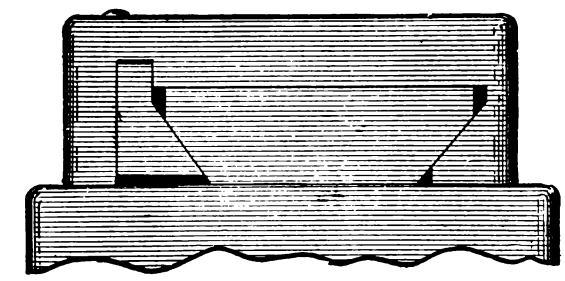

Fig. 1581.

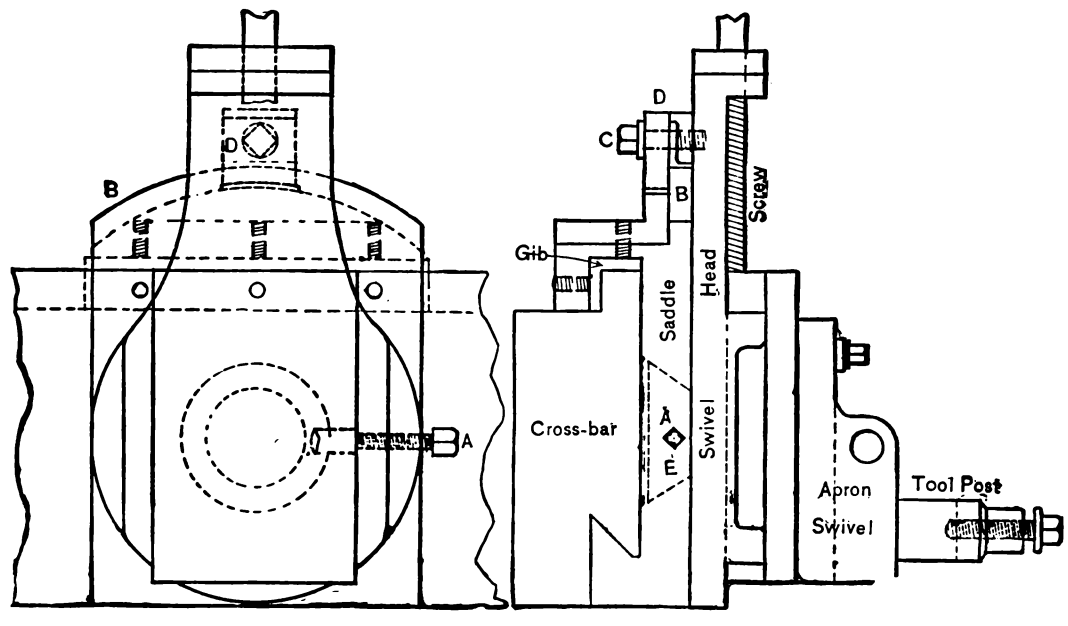

Fig. 1582.

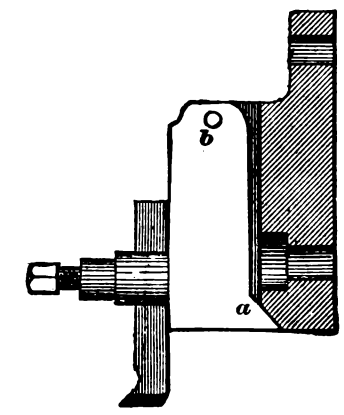

Fig. 1583.

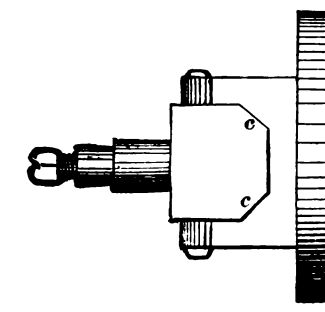

Fig. 1584.

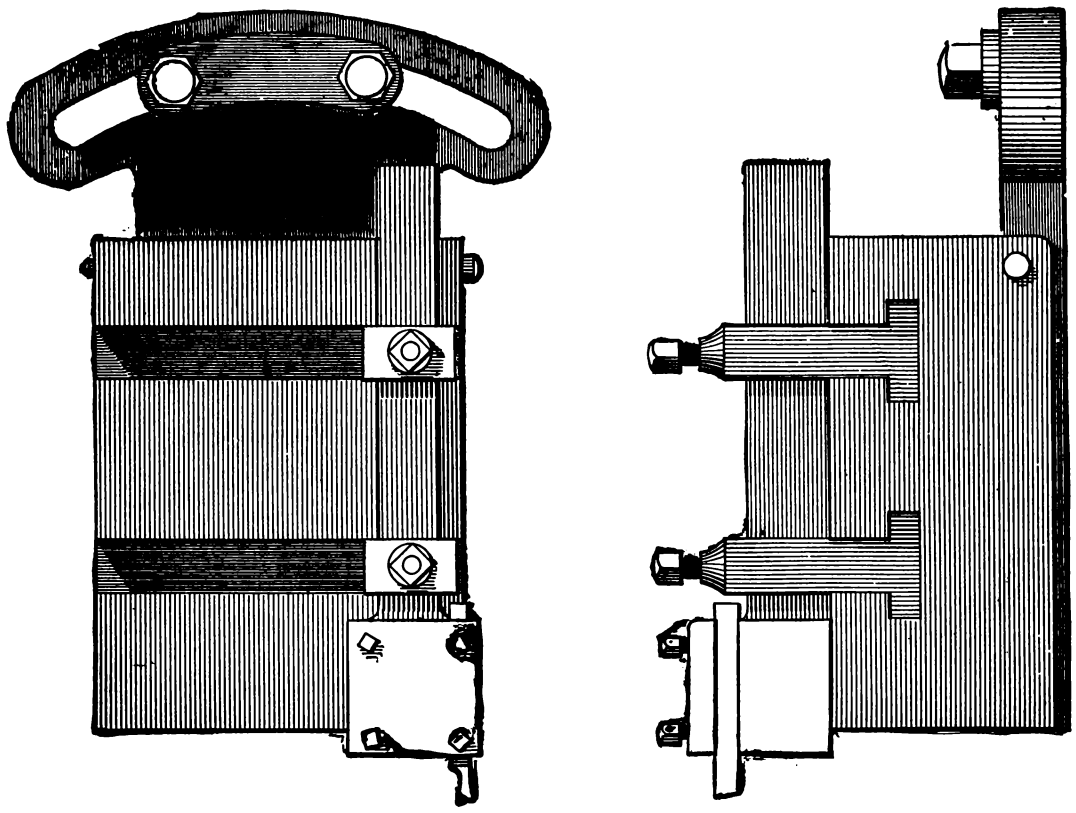

Fig. 1585.

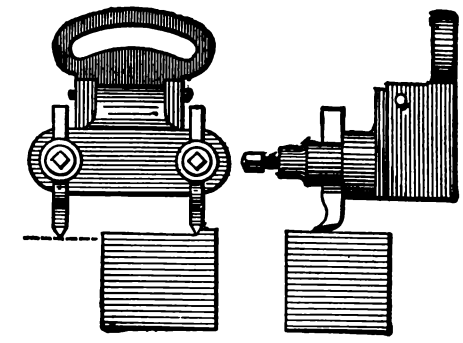

Fig. 1586.

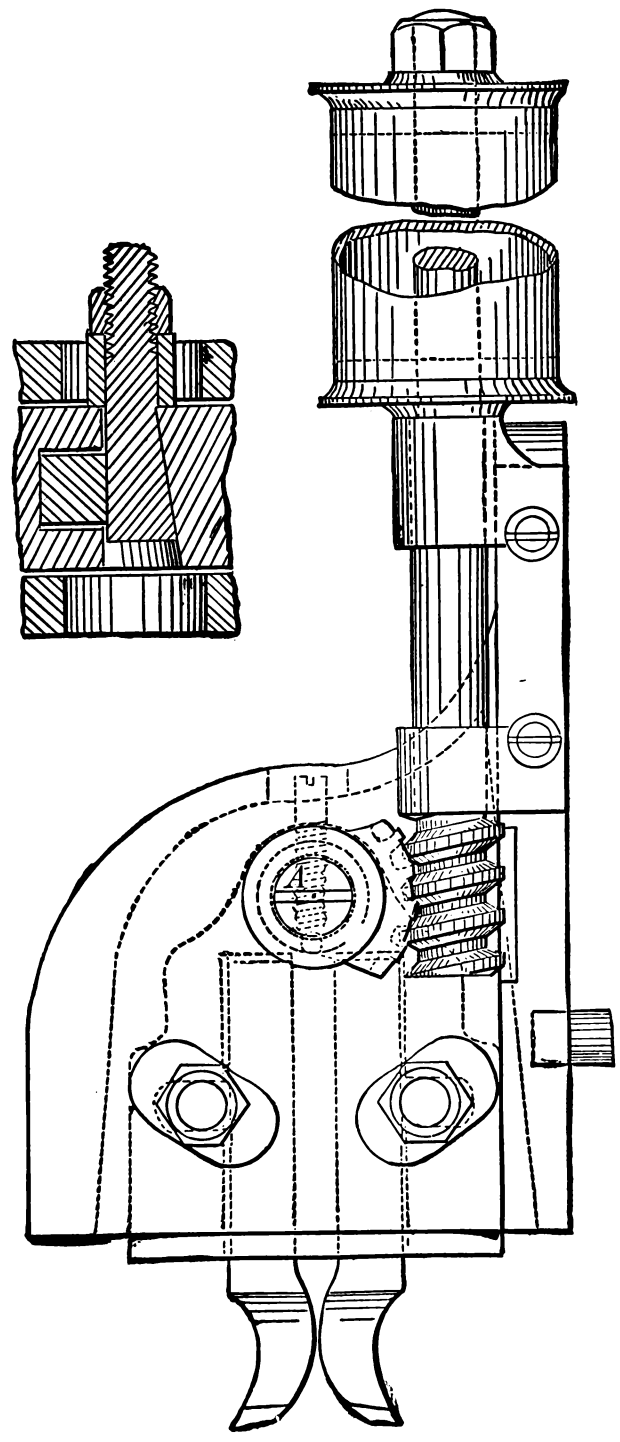

Fig. 1587.

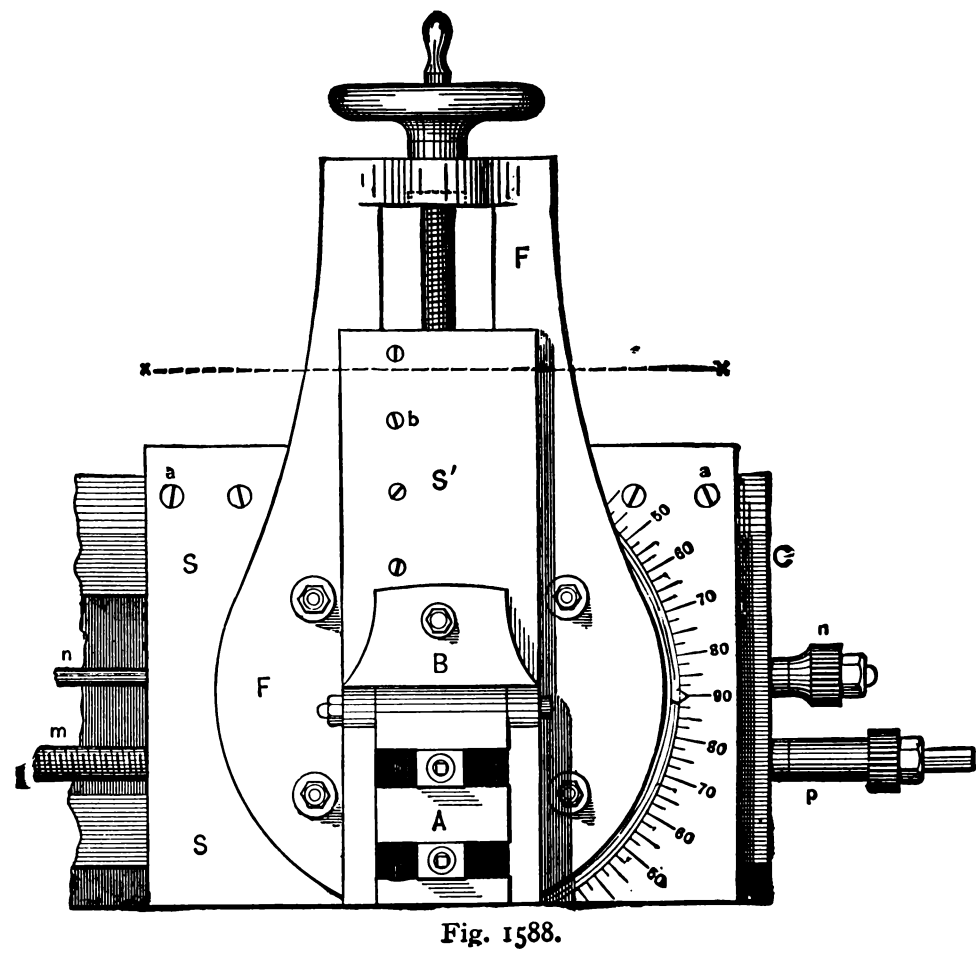

Fig. 1588.

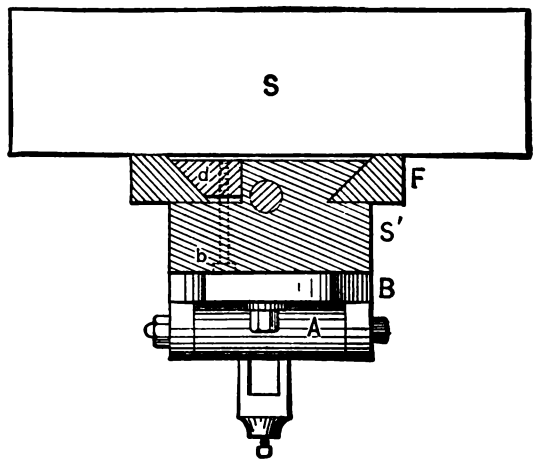

Fig. 1589.

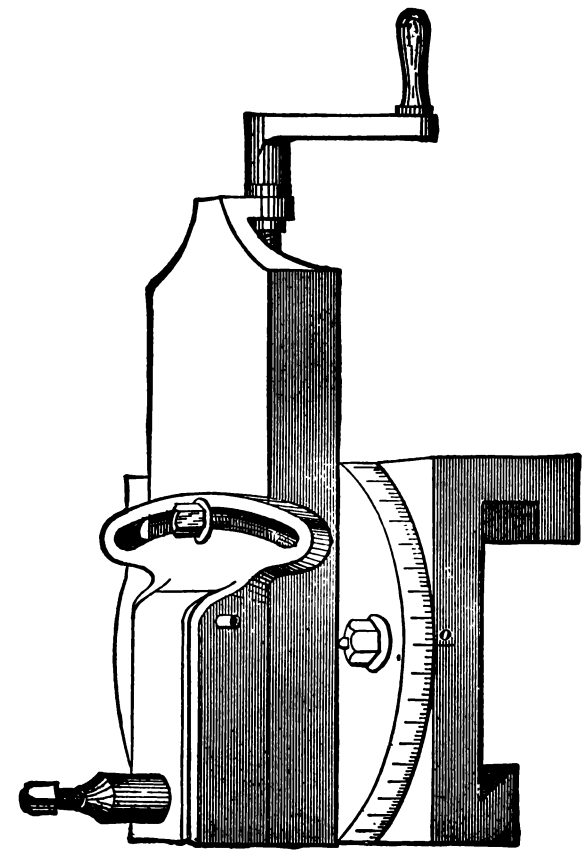

Fig. 1590.

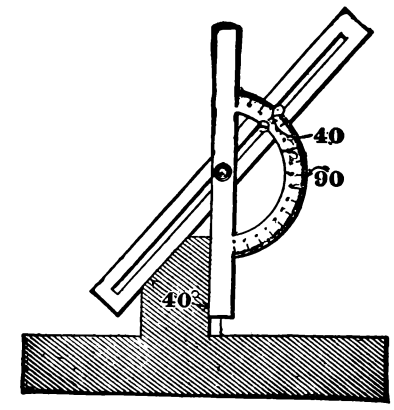

Fig. 1591.

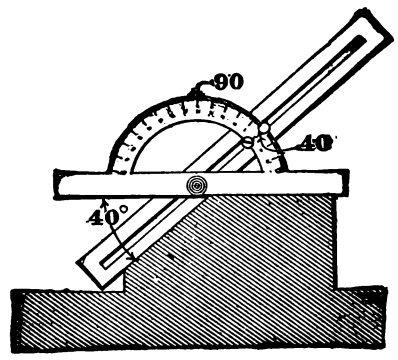

Fig. 1592.

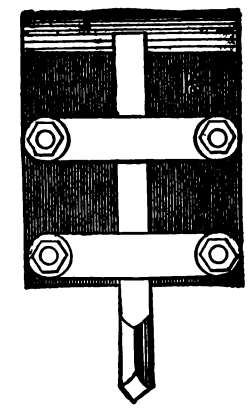

Fig. 1593.

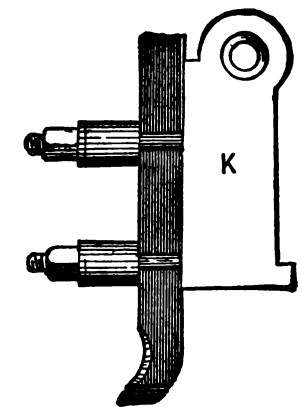

Fig. 1594.

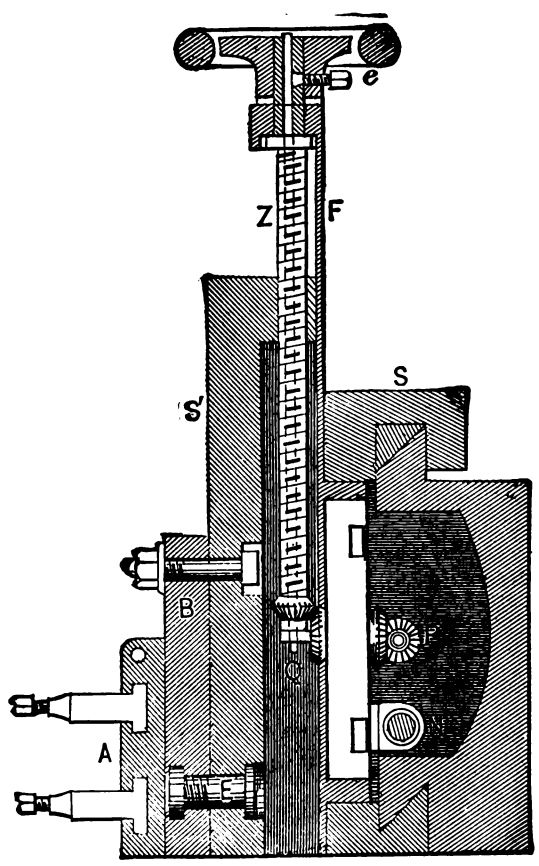

Fig. 1595.

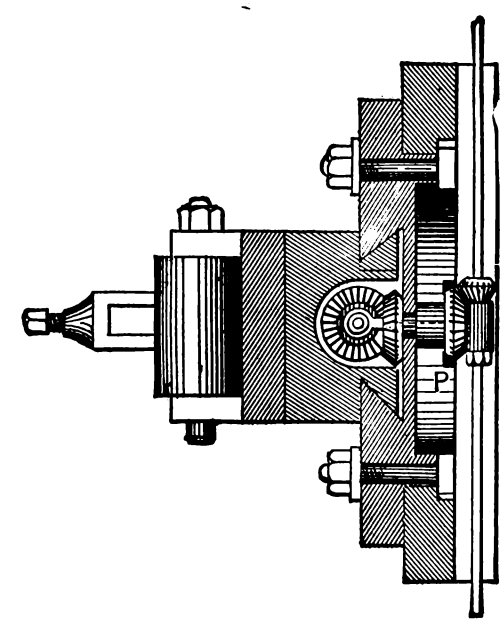

Fig. 1596.

in its adjusted position by the bolts *n* in Fig. 1573, the object of swinging it being to enable the tool to be lifted on the back stroke and clear the cut, when cutting vertical faces, as was explained with reference to shaping machines.

The tool apron is in American practice pivoted between two jaws, which prevent its motion sideways, and to prevent any play or lost motion that might arise from the wear of the taper pivoting pin *b*, in Fig. 1583, the apron beds upon a bevel as at *a*, so that in falling to its seat it will be pulled down, taking up any lost motion upon *b*.

The bevel at *a* would also prevent any side motion to the apron should wear occur between it and the jaws. In addition to this bevel, however, there may be employed two vertical bevels *c* in the top view in Fig. 1584. In English practice, and especially upon large planing machines, the apron is sometimes made to embrace or fit the outsides of the tool box, as in Fig. 1585, the object being to spread the bearings as wide apart as possible, and thus diminish the effect of any lost motion or wear of the pivoting pin, and to enable the tool post or holder to be set to the extreme edge of the tool box as shown in the figure.

It is desirable that the tool apron bed as firmly as possible back against its seat in the tool box, and this end is much more effectively secured when it is pivoted as far back as possible, as in Fig. 1585, because in that case nearly all the weight of the apron, as well as that of the tool and its clamp, acts to seat the apron, whereas when the pivot is more in front as *m*, in Fig. 1573, it is the weight of the tool post and tool only that acts to keep the apron seated.

In small planing machines it is a great advantage to provide an extra apron carrying two tool posts, as in Fig. 1586, so that in planing a number of pieces, that are to be of the same dimension, one tool may be used for roughing and one for finishing the work. The tools should be wider apart than the width of the work, so that the finishing tool will not come into operation until after the roughing tool has carried its cut across.

When the roughing tool has become dulled it should, after being ground up, be set to the last roughing cut taken, so that it will leave the same amount of finishing cut as before.

The advantage of this system is that the finishing tool will last to finish a great many pieces without being disturbed, and as a result the trouble of setting its cut for each piece is avoided; on which account all the pieces are sure to be cut to the same dimension without any further measuring than is necessary for the first piece, whereas if one tool only is used it rapidly dulls from the roughing cut, and will not cut sufficiently smooth for the finishing one, and must therefore be more frequently ground up to resharpen it, while it must be accurately set for each finishing cut. A double tool apron of this kind is especially serviceable upon such work as planing large nuts, for it will save half the time and give more accurate work.

In some planing machines, and notably those made by Sir Joseph Whitworth, a swivelling tool holder is made so that at each end of the stroke the cutting tool makes half a revolution, and may therefore be used to cut during both strokes of the planer table. A device answering this purpose is shown in Fig. 1587. The tool-holding box is pivoted upon a pin A, and has attached to it a segment of a circular rack or worm-wheel, operated by a worm upon a shaft having as its upper end the pulley shown, so that by operating this pulley, part of a revolution at the end of each work-table stroke, one or the other of the two tools shown in the tool box is brought into position to carry the cut along. Thus two tools are placed back to back, and it is obvious that when the tool box is moved to the right, the front tool is brought into position, while when it is moved to the left, the back or right-hand tool is brought into position to cut, the other tool being raised clear of the work.

The objections to either revolving one tool or using two tools so as to cut on both strokes are twofold: first, the tools are difficult to set correctly; and, secondly, the device cannot be used upon vertical faces or those at an angle, or in other words, can only be used upon surfaces that are nearly parallel to the surface of the work table.

Figs. 1588 and 1589 represent the sliding head of the large planer at the Washington Navy Yard, the sectional view, Fig. 1589, being taken on the line X X in Fig. 1588. C is the cross bar and S the saddle, F being the swing frame or fiddle, as some term it, and S′ the vertical slider; B is the tool box, and A the apron.

The wear of the cross slider is taken up by the set screws *a*, and that of the vertical slide by the screws *b*.

The graduations of the degrees of a circle for setting over the swing frame F, as is necessary when planing surfaces that are at an angle to the bed and to the cross slide, are marked on the face of the saddle, and the pointer (*f*, Fig. 1578) is fastened to the edge of the swing frame. When the spring frame is vertical the pointer is at 90° on the graduated arc, which accords with English practice generally. In American practice, however, it is customary to mark the graduations on the edge of the swing frame as in Fig. 1590, so that the pointer stands at the zero point *o* when the swing frame is vertical, and the graduations are marked on the edge of the swing frame as shown, the zero line *o* being marked on the edge of the saddle.

In the English practice the swing frame is supposed to stand in its neutral or zero position when it is vertical, and all angles are assumed to be measured from this vertical zero line, so that if the index point be set to such figure upon the graduated arc as the angle of the work is to be to a vertical line, correct results will be obtained.

Thus in Fig. 1591 (which is from *The American Machinist*) the pointer is set to 40° and the bevelled face is cut to an angle of 40° with the vertical face as marked. But if the head be graduated as in Fig. 1592, the face of the planer table being taken as the zero line *o*, then the swing frame would require to be set over to 30° out of its normal or neutral vertical position as is shown in figure, the bevelled face being at an angle of 50° from a vertical, and 40° from a horizontal line; hence the operator requires to consider whether the number of degrees of angle are marked on the drawing from a zero line that is vertical or one that is horizontal.

Referring again to Fig. 1588, the slots for the tool post extend fully across the apron, so that the tool posts may be set at any required point in the tool box width, and the tool or tool holder may be set nearer to the edge of the tool box than is the case when fixed bolts, as in Fig. 1590, are used, because these bolts come in the way.

This is mainly important when the tool is required to carry a deep vertical cut, in which case it is important to keep the tool point as close in to the holder as possible so that it may not bend and spring from the pressure of the cut.

The tool or holder may be held still closer to the edge of the head, and therefore brought still closer to the work, when the apron embraces the outside of the tool box, as was shown in Fig. 1585, and referred to in connection therewith.

A sectional side view and a top view of Fig. 1588 through the centre of the head is given in Figs. 1595 and 1596, exposing the mechanism for the self-acting feed traverse, and for the vertical feed. For the feed traverse the feed screw (*m*, Fig. 1588) passes through the feed nut N. For the vertical feed the feed rod (*n*, Fig. 1588) drives a pair of bevel gears at P, which drives a second pair at Q, one of which is fast on a spindle which passes through the vertical feed screw, and is secured thereto by the set-screw *e*. The object of this arrangement is that if the self-acting vertical feed should be in action and the tool or swing frame S′ should meet any undue obstruction, the set screw *e* will slip and the feed would stop, thus preventing any breakage to the gears at P or Q. The feed screw is threaded into the top of S′. At E is the pin on which the tool box pivots to swing it at an angle.

The mechanism for actuating the cross-feed screw and the feed rod is shown in the top view, Fig. 1597, and the side view, Fig. 1598, in which A is a rod operated vertically and actuated from the stop (corresponding to stop R in Fig. 1558) that actuates the belt-shifting gear. Upon A is the sleeve B, which actuates rod C, which operates the frame D. This frame is pivoted upon a stud which is secured to the cross bar C, and is secured by the nut at E. Frame D carries pawls F and G, the former of which engages gear wheel H, which drives the pinion *n*, Fig. 1598, that is fast on the feed rod, while the latter drives the gear K, which in turn drives pinion P, which is fast upon the feed screw in Fig. 1588.

The feeds are put into or thrown out of action as follows :—On the same shaft or pin as the pawls G and F, is secured a tongue T, Fig. 1599, whose end is wedge shaped and has a correspondingly shaped seat in a plate V, whose cylindrical stem passes into a recess

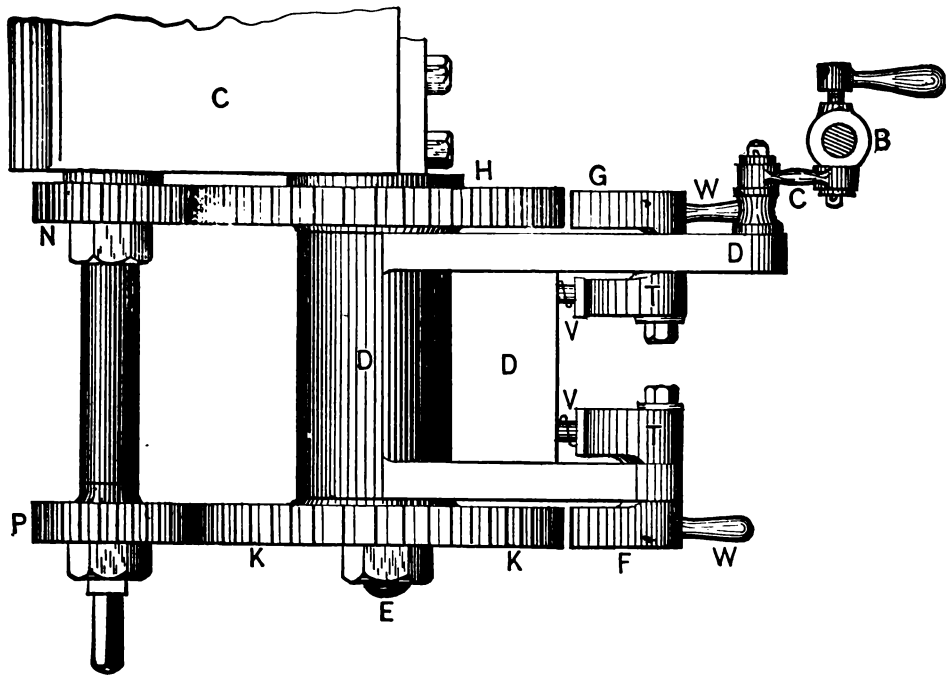

Fig. 1597.

provided in D, and is surrounded by a spiral spring which acts to force V outwards from the recess.

In the position shown in the figure the end of T is seated in the groove in V, and the pressure of the spring acts to hold T still and keep the pawl G from engaging with the teeth of gear-wheel H. But suppose the handle W (which is fast on the pawl G) is pulled upwards, and T will move downwards, disengaging from the groove in V, and the upper end of pawl G will engage with the teeth of H,

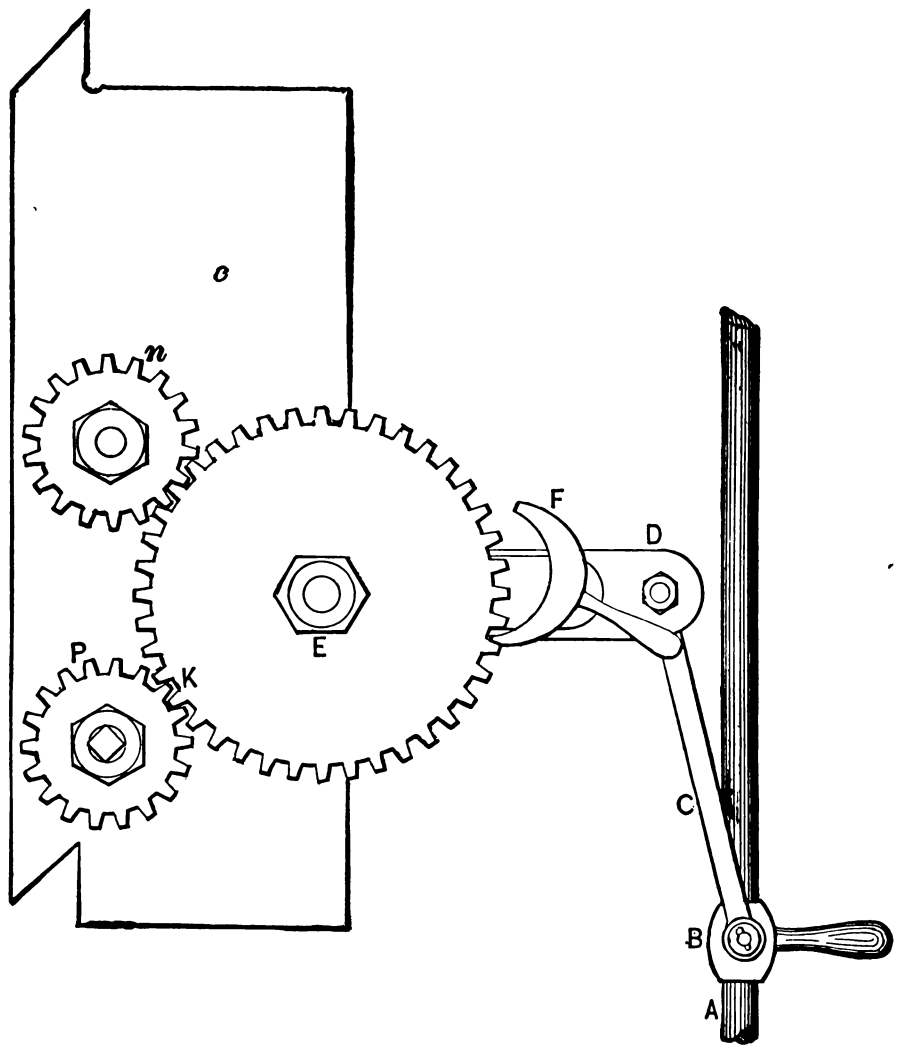

Fig. 1598.

actuating in the direction of the arrow during the upward motion of rod A, and thus actuating pinion *n* and putting the vertical feed in motion in one direction. When the rod A makes its downward stroke the pawl G will slip over the teeth of H, because there is nothing but the spiral spring to prevent the end of the pawl from slipping over these teeth. To place the vertical feed in action in the other direction, handle W is pressed downwards, causing the bottom end X of the pawl to engage with the teeth of H.

PLANER BEDS AND TABLES.—The general forms of the beds of small planers are such as in Figs. 1557 and 1558, and those of the larger sizes such as shown in Fig. 1563.

It is of the first importance that the V-guideways in these beds should be straight and true, and that the corresponding guides on the planer table should fit accurately to those in the bed ; for which purpose it is necessary, if the greatest attainable accuracy is to be had, that the guideways in the bed first be made correct, and those on the table then fitted, using the bed to test them by.

The angle of these guides and guideways ranges from about 60° in the smallest sizes to about 110° in the largest sizes of planers.

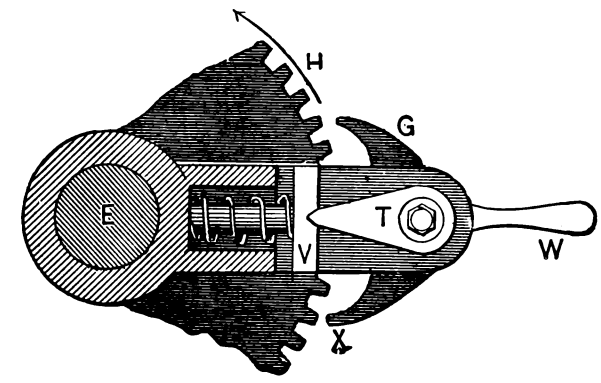

Fig. 1599.

Whatever the angle may be, however, it is essential that all the angles be exactly equal, in order that the fit of the table may not be destroyed by the wear.

In addition to this, however, it is important that each side of the guides stand at an equal height, or otherwise the table will not fit, notwithstanding that all the angles may be equal.

Suppose, for example, that in Fig. 1600 all the sides are at an equal angle, but that side *e* was planed down to the dotted line *e*, then all the weight of the table would fall on side *a*, and, moreover, the table would be liable to rock in the guideways, for whenever the combined weight of the table and the pressure of the cut was

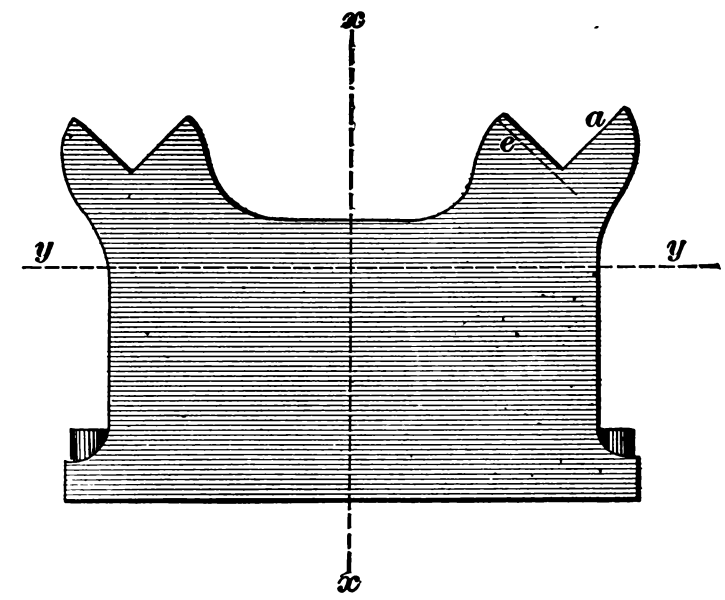

Fig. 1600.

greatest on the right-hand of the middle *x* of the table width and the feed was carried from right to left, then the table would move over, as shown exaggerated in Fig. 1601, because the weight would press guide *g* down into its guideways, and guide *h* would then rise up slightly and not fit on one side at all, while on the other side it would bear heaviest at point *p*. Great care is therefore necessary in planing and fitting these guides and ways, the processes for which are explained under the respective headings of " Examples in Planer Work," and " Erecting Planers."

In some designs the bed and table are provided with but one V-guideway, the other side of the table being supported on a flat side, and in yet another form the table is supported on two flat guideways.

Referring to the former the bearing surface of the V and of the

flat guide must be so proportioned to that of the V that the wear will let the table down equally, or otherwise it would become out of parallel with the cross slide, and would plane the work of unequal thickness across its width.

Referring to the second, which is illustrated in Fig. 1602, it possesses several disadvantages.

Thus, if there be four gibs as at A, B, and E, F, set up by their

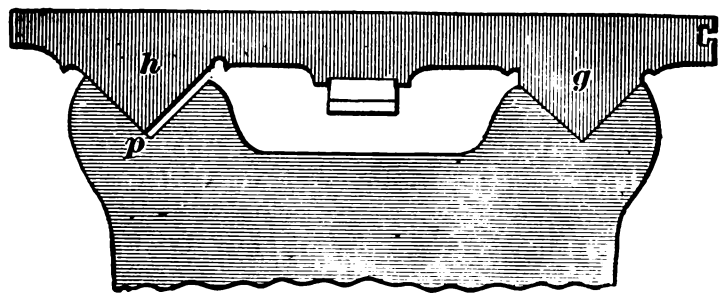

Fig. 1601.

respective set-screws, the very means provided to take up the wear affords a means of setting the bed out of line, so that the slots in the table (and, therefore, the chucks fitting to these slots) will not be in the line of motion of the table, and the work depending upon these chucks will not be true. This may be avoided by taking up the wear on two edges only, as in Fig. 1603 at A,B, but in this case

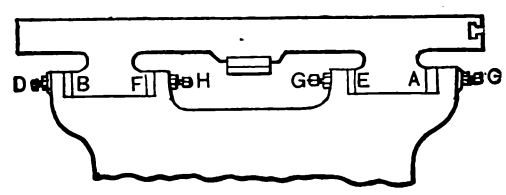

Fig. 1602.

the bearing at E and F would eventually cease by reason of the wear.

Suppose, for example, that the pressure of the tool cut tends to throw the table in the direction of arrow J, and the surfaces at A and F resist the thrust and both will wear. But when the strain on the table is in the direction of arrow K, the surfaces B, E, will

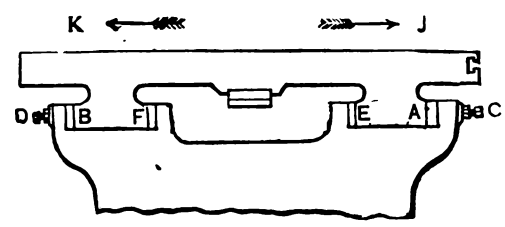

Fig. 1603.

both wear; hence while the width apart of the table slides becomes greater, the width apart of the bed slideways wears less, and the fit cannot be maintained on the inner edges of the guideways. It is furthermore to be noted that with flat guideways the table will move sideways very easily, since there is nothing but the friction of the slides to prevent it, but in the case of V-guides

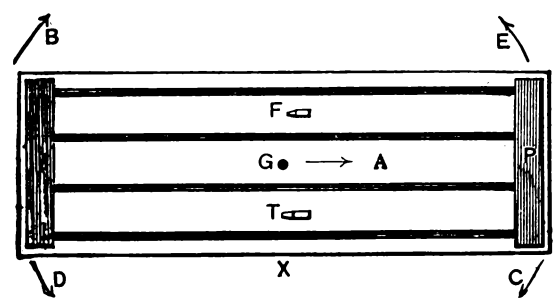

Fig. 1604.

the table must lift before it can move sideways; hence, it lies very firmly in its seat, its weight resisting any side motion.

It is found in practice that the wear of the guides and guideways in planer tables and beds is greatest at the ends, and the reason of this is as follows:—

In Fig. 1604 is a top view of a planer table, the cutting tool being assumed to be at T, and as the driving gear is at G forcing the table in the direction of the arrow A, and the resistance is at T, the tendency is to throw the table around in the direction of arrows B and C. When the tool is on the other side of the middle of the table width as at F, the tendency is to throw the table in the opposite direction as denoted by the arrows D and E, which obviously causes the most wear to be at the ends of the slides.

As the feed motions are placed on the right-hand side of the machines the operator stands on that side of the machine at X, and starts the cut from that side of the table; hence unless the work is

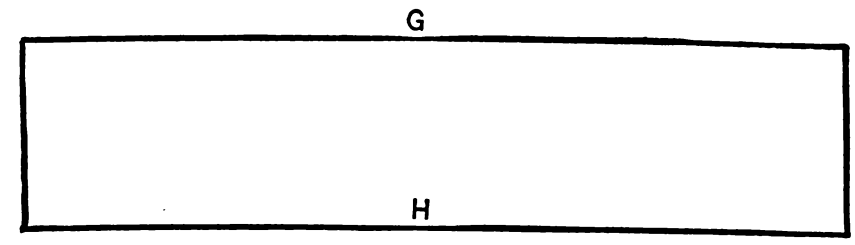

Fig. 1605.

placed in the middle of the table width, the wear will be most in the direction of arrows B and C.

The methods of fitting the guideways and guides of planer beds and tables is given in the examples of erecting.

A very good method of testing them, however, is as follows:— Suppose that we have in Fig. 1605 a plate that has been planed on both edges G, H, and that in consequence of a want of truth in the planer guideways edge G is rounding and edge H hollow, the

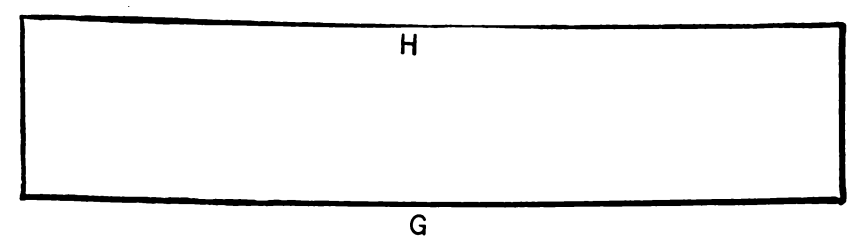

Fig. 1606.

plate being supposed to lie upon the planer table in the position in which it was planed.

Now, suppose that it be turned over on the planer, as in Fig. 1606, the rounding edge, instead of standing on the right-hand side of the planer table, will stand on the left-hand side, so that if that edge were planed again in its new position it would be made hollow instead of rounding in its length. It is obvious, therefore, that if a planed edge shows true when turned over on the planer table, the Vs of the planer are true, inasmuch as the table moves in a straight line in one direction, which is that affecting the truth of all surfaces

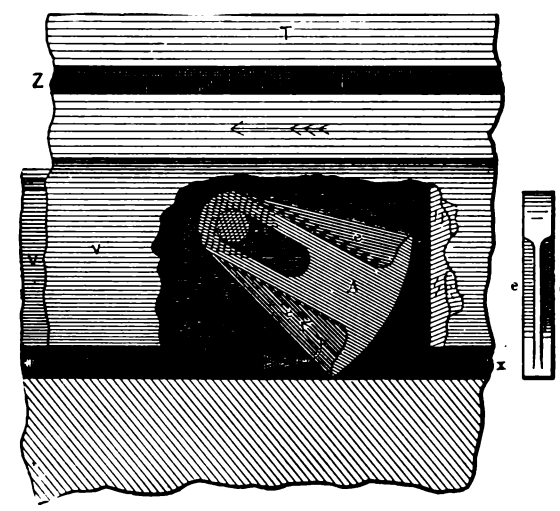

Fig. 1607.

of the work that are not parallel to the cross feed of the tool, or, what is the same thing, parallel to the surface of the planer table.

PLANING MACHINE TABLES.—In order that the guides on the table of a planer may not unduly wear, it is essential that they be kept well lubricated, which is a difficult matter when the table takes short strokes and has work upon it that takes a long time to perform, in which case it is necessary to stop the planing operations and run the work back so as to expose the guideways in the bed, so that they may be cleaned and oiled.

It will often occur that the work will not pass beneath the cross slide, and in that case it should be raised out of the ways to enable

proper oiling, because insufficient lubrication frequently causes the guides and guideways to tear one another, or cut as it is commonly termed.

The means commonly employed for oiling planer **Vs or guide-ways** are as follows :—At the top of the guideways small grooves, *g g*, Fig. 1609, are provided, and at the bottom a groove *x*. In the guides on the table there are provided pockets or slots in which are

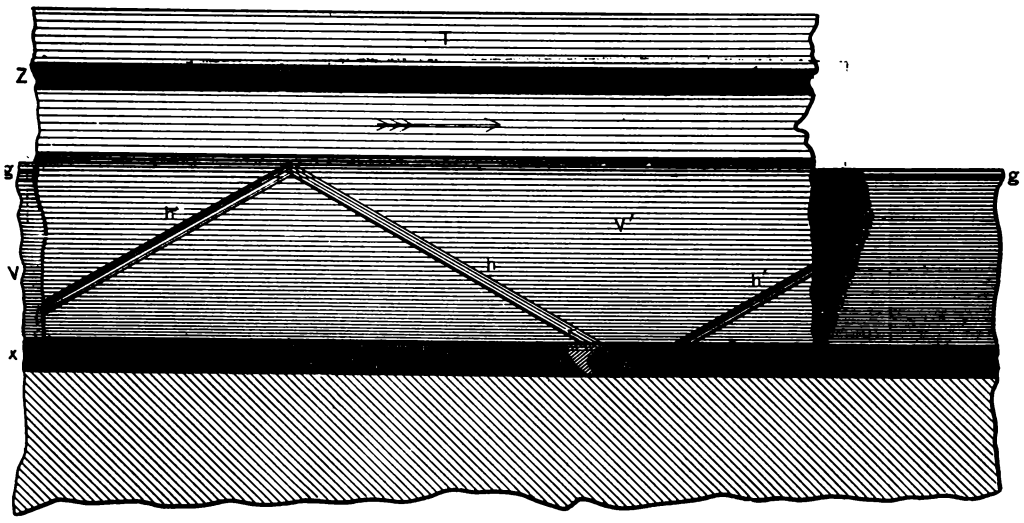

Fig. 1608.

pivoted pendulums of the form shown in Fig. 1607 at A. Each pendulum passes down to the bottom of groove *x* in which the oil lies, and is provided on each side with recesses *e*, which are also seen in the edge view on the right of the figure.

The pendulums are provided with a long slot to enable them when the table motion reverses to swing over and drag in the opposite direction (as shown in Fig. 1607) ; as they drag on the bottom of groove *x* of the bed they lift the oil it contains, which passes up

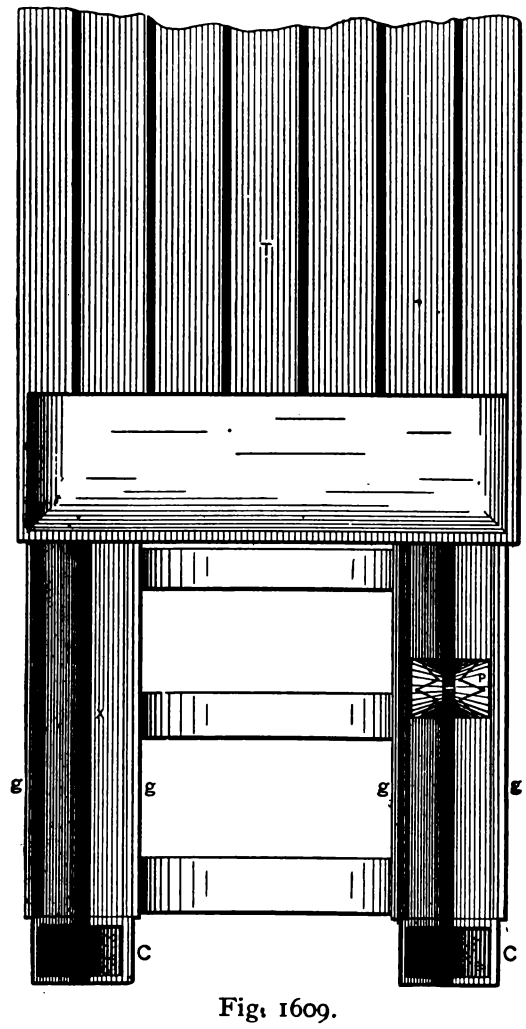

Fig. 1609.

the sides of the pendulum as denoted by the arrow, and into grooves provided on the surface of the table guide, as at *h* in Fig. 1608, in which V' is the table guide, V the guideway in the bed, *g* oil grooves, (see sectional view, Fig. 1613), *x* the oil groove at the bottom of the bed V, and *h h* the oil grooves which receive the oil the pendulum lifts.

The oil grooves *h* on the table guide run into the grooves *g* in the V-guideway in the bed, hence grooves *g g* become filled with oil. But after the end of the table has passed and left the bed V exposed, the oil flows out of grooves *g* down the sides of the guideway, and constant lubrication is thus afforded at all times when the stroke of the table is sufficient to enable the pendulums to force the oil sufficiently far along oil way *h*. When the table reverses the pendulum will swing over and lift the oil up into grooves or oil ways *h'*.

Another and excellent method of oiling, also invented by Mr. Hugh Thomas, of New York, is shown in Figs. 1609 and 1610, in which P represents an oiling roll or wheel, V-shaped, to correspond to the shape of the Vs. This roll is laced with cotton wick or braid, as shown by the dark zigzag lines, and is carried in a frame *f*, capable of sliding vertically in a box C, which is set in a pocket in the bed V, and contains oil. By means of a screw S, the roll P is set to touch the face of the table V, and the friction between the roll and the V, as the table traverses, rotates the roll, which carries up the oil and lubricates the table V over its whole surface. The dust, &c., that may get into the oil settles in the bottom of the box C, which can occasionally be cleaned out. In this case the oil is not only presented to the oil grooves (*h*, Fig. 1608), but spread out upon the Vs ; but it is nevertheless advisable to have the grooves *h* so as to permit of an accumulation of oil that will aid in the distribution along the Vs of the bed.

This method of oiling has been adopted in some large and heavy planers built by R. Hoe & Co., and has been found to operate admirably, keeping the guides and guideways clean, bright, and well lubricated.

Mr. Thomas has also patented a system of forced oil circulation for large planers. In this system a pump P, Fig. 1611, draws the oil from the cellars C (which are usually provided on the ends of planer beds) and delivers it through pipes passing up to the sides of the Vs, thus affording a constant flow of oil. A reservoir at the foot of the pump enables the dirt, &c., in the oil to settle before it enters the pump, which can be operated from any desirable part of the planer mechanism. The pendulums are also used in connection with the forced circulation.

As the work is fastened to the upper face of a planing machine

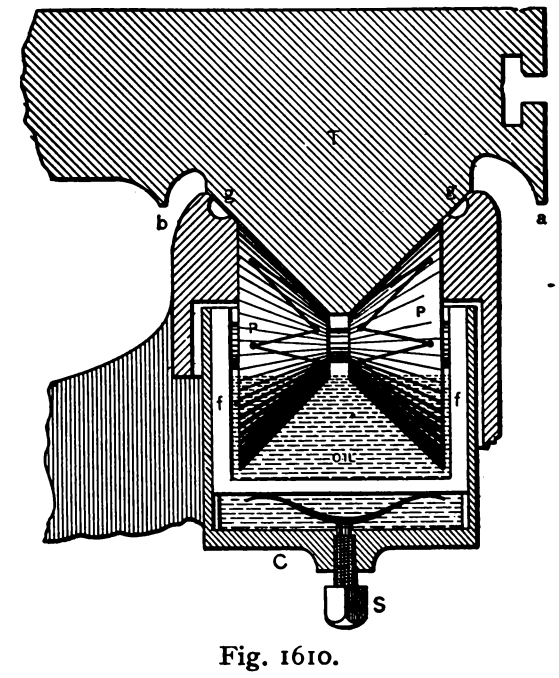

Fig. 1610.

table either directly or through the intervention of chucking devices, the table must be pierced with holes and grooves to receive bolts or other appliances by means of which the work or chuck, as the case may be, may be secured.

For receiving the heads of bolts, T-shaped grooves running the full length of the table are provided, and in addition there are sometimes provided short T-grooves, to be shown presently.

For receiving stops and other similar chucking devices, the tables are provided with elther round or square holes.

In Fig. 1612 is shown a section of a table provided with T-grooves and rows of round holes, *a*, *b*, *c*, *d*, *e*, which pass entirely through the table, and hence must not be placed so that they will let dirt fall through to the V-guides or the rack. Tables with this arrangement

of holes and grooves are usually used upon small planers in the United States, and sometimes to large ones also.

It is obvious that the dirt, fine cuttings, &c., will pass through the holes and may find its way to the V-guideways. Especially will this be the case when water is used upon the tool to take smooth cuts upon wrought iron and steel. To obviate this the construction shown in Fig. 1613 is employed.

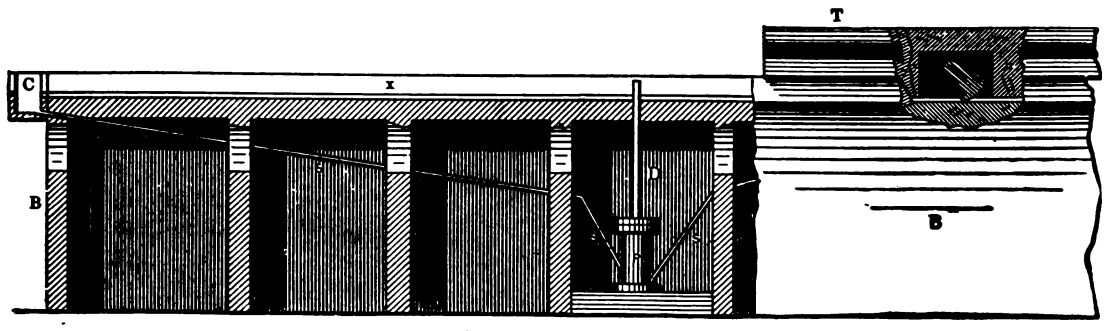

Fig. 1611.

Fig. 1613 represents a section of one guideway of a table and bed. On each side of the table V there is cut a groove leaving

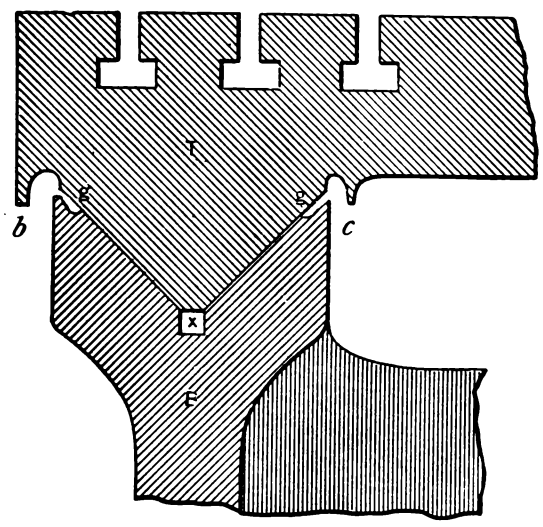

Fig. 1613.

projecting ribs *b*, *c*, and whatever water, oil, or dirt may pass through the holes (Fig. 1612), will fall off these points *b*, *c*, Fig. 1613, and thus escape the guideways, while falling dust will be excluded by the wings *b*, *c*, from the Vs.

The capacity of a planer table may be increased by fitting thereto

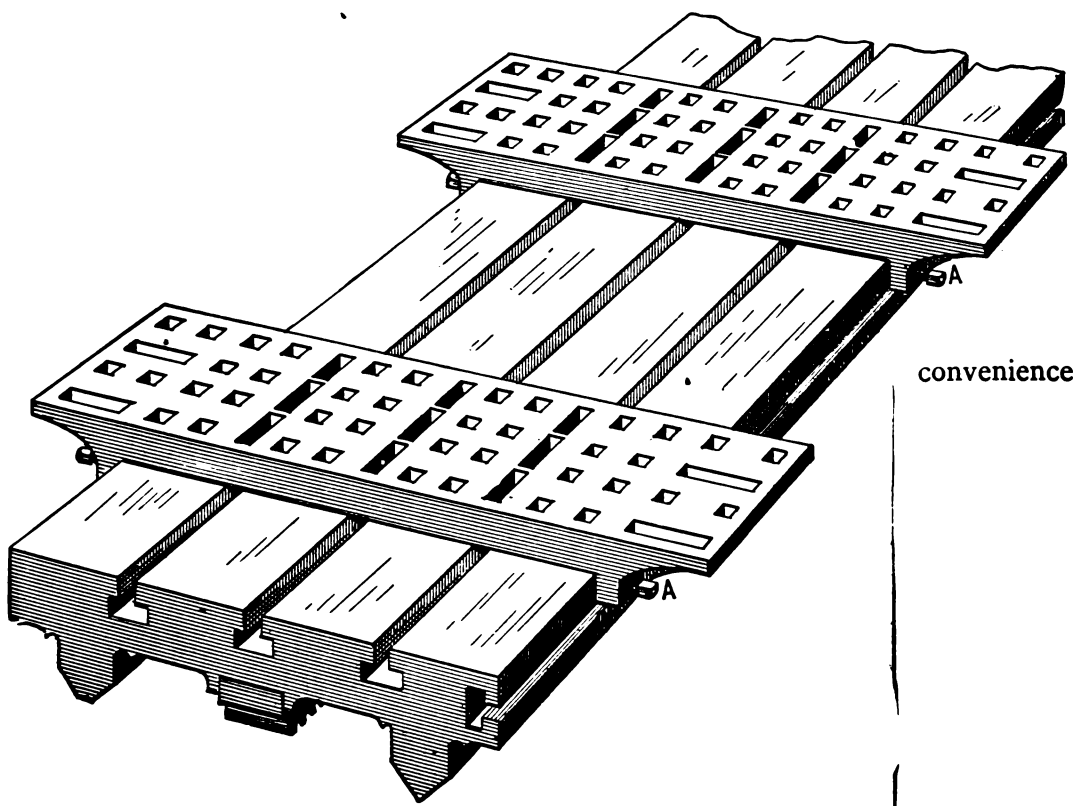

Fig. 1614.

two supplementary short tables, as shown in Fig. 1614, several applications of its use being given with reference to examples in planer work. These supplementary tables are secured to the main table by set-screws at A, and have been found of great value for a large variety of work, especially upon planing machines in which the table width is considerably less than the width between the uprights or stanchions.

Fig. 1615 represents the arrangement of square holes and T-

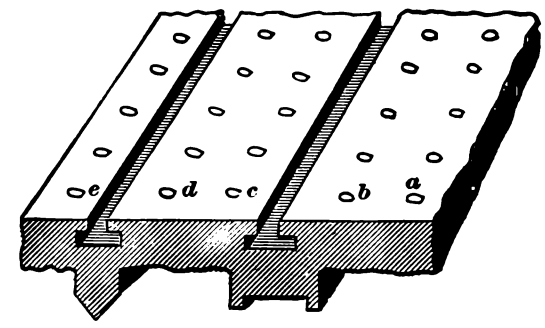

Fig. 1612.

grooves employed upon large planers. The square holes are cast in the table, and are slightly taper to receive taper plugs or stops against which the work may abut, or which may be used to wedge against, as will be hereafter described, one of these stops being shown at S in the figure.

The T-shaped slots *f*, *g*, *h*, are to receive the heads of bolts as

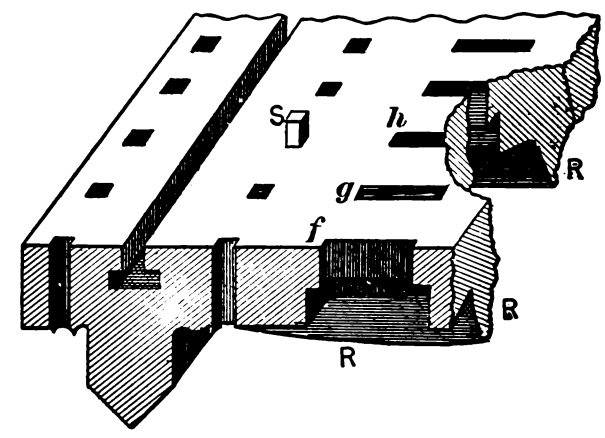

Fig. 1615.

shown in Fig. 1616. The bolt head is rounded at corners *a*, *b*, and the square under the head has the corresponding diagonal corners as *c* also rounded, so that the width of the head being slightly less than that of the slot it may be passed down in the slot and then given a quarter revolution in the direction of the arrow, causing the wings of the head to pass under the recess of the T-groove, as shown in Fig. 1617, which is a sectional end view of the groove with the bolt in place. The square corners at *e* and at *f* prevent the bolt from turning round more than the quarter revolution when screwing up the bolt nut, and when the nut is loosened a turn the bolt can be rotated a quarter revolution and lifted out of the groove.

Now it is obvious that these slots serve the same purpose as the longitudinal T-grooves, since they receive the bolt heads, and it might therefore appear that they could be dispensed with, but it is a great convenience to be able to adjust the position of the bolt across

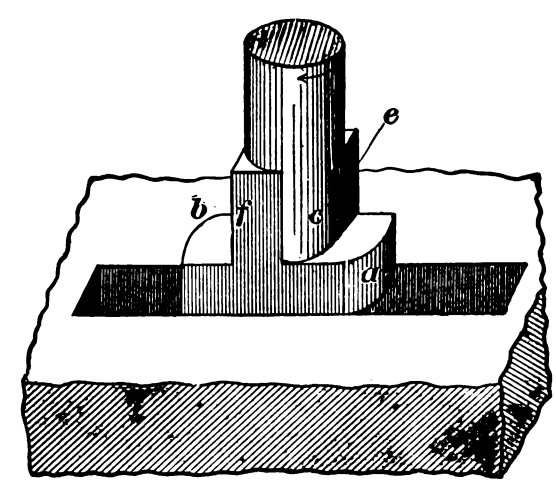

Fig. 1616.

the table width, which cannot be done if longitudinal grooves only are employed. Indeed, it might easily occur that the longitu-

dinal grooves be covered by the work when the short transverse ones would serve to advantage, and in the wide range of work that large planers generally perform, it is desirable to give every means for disposing the bolts about the table to suit the size and shape of the work.

It is obvious that the form of bolt head shown in Fig. 1616 is

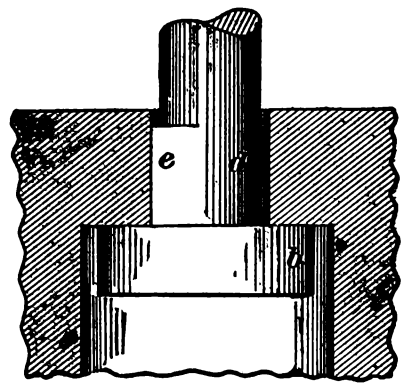

Fig. 1617.

equally applicable to the longitudinal grooves as to the cross slots, enabling the bolt to be inserted, notwithstanding that the work may cover the ends of the longitudinal slots.

The round holes *a*, *b*, *c*, &c., in Fig. 1612, are preferable to the square ones, inasmuch as they weaken the table less and are equally effective. Being drilled and reamed parallel the plugs that fit them may be passed through them to any desirable distance, whereas the square plugs being taper must be set down home in their holes,

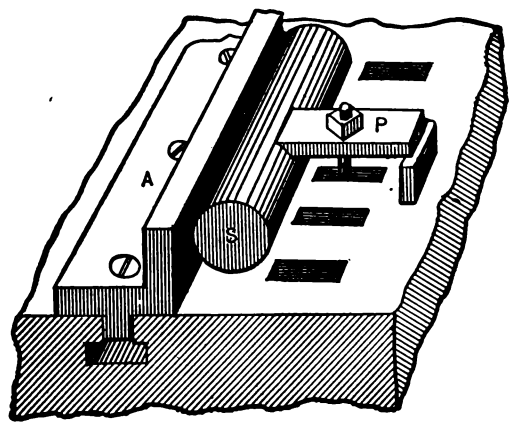

Fig. 1618.

necessitating the use of plugs of varying length, so that when in their places they may stand at varying heights from the table, and thus suit different heights of work. Whatever kind of holes are used it is obvious that they must be arranged in line both lengthways of the table and across it, so that they will not come in the way of the ribs R, which are placed beneath it to strengthen it.

The longitudinal grooves are planed out to make them straight and true with the V-guides and guideways, so that chucking appli-

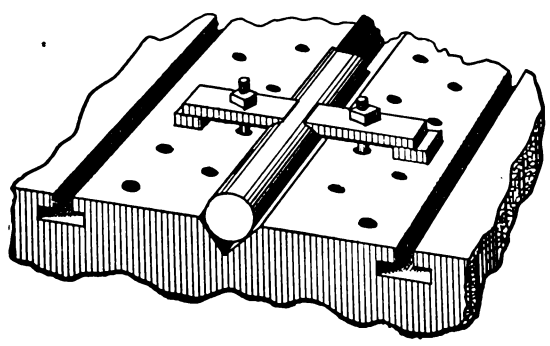

Fig. 1619.

ances fitting into the grooves may be known to be set true upon the table.

In Fig. 1618, for example, is shown an angle piece A having a projection fitting into a longitudinal groove, the screws whose heads are visible passing through A into nuts that are in the widened part of the groove, so that operating the screws secures A to the table. The vertical face of A being planed true, a piece of work, as a shaft S, may be known to be set in line with the table when it is clamped against A by clamps as at P, or by other holding devices. Angle pieces such as A are made of varying lengths and heights to suit different forms and sizes of work.

In some planing machine tables a V-groove is cut along the centre for the purpose of holding spindles to have featherways or splines cut in them, the method of chucking being shown in Fig. 1619. This, however, is not a good plan, as the bolts and plates are apt to bend the shaft out of straight, so that the groove cut in the work will not be straight when the spindle is removed from the

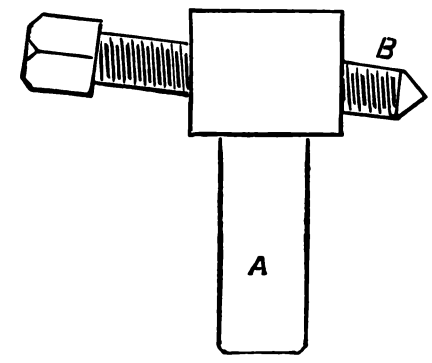

Fig. 1620.

clamp pressure. The proper method of chucking such work will, however, be given in connection with examples on planer work.

For the round holes in planer tables several kinds of plugs or stops are employed, the simplest of them being a plain cylindrical plug or stop.

Fig. 1620 represents a stop provided with a screw B. The stem A fits into the round holes, and the screw is operated to press against the work. By placing the screw at an angle, as shown, its pressure tends to force the work down upon the planer table.

A similar stop, termed a bunter screw, S, Fig. 1621, may be used

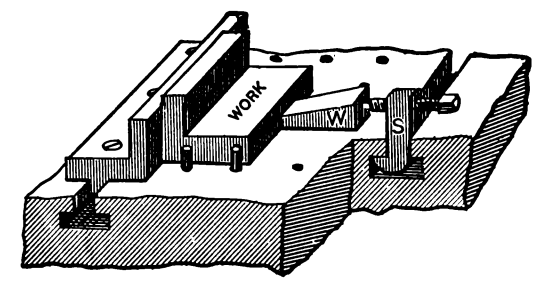

Fig. 1621.

in the longitudinal slots, the shape of its hook enabling it to be readily inserted and removed from the slot. These screws may be applied direct to the work when the circumstances will permit, or a wedge W may be interposed between the screw and the work, as shown.

Fig. 1622 represents a form of planer chuck used on the smaller sizes of planers, and commonly called planer centres. A is the base or frame bolted to the planer table at the lugs L; at B is a fixed head carrying what may be termed the live centre D, and C is a head similar to the tailstock of a lathe carrying a dead centre; F is an index plate having worm-teeth on its edge and being operated

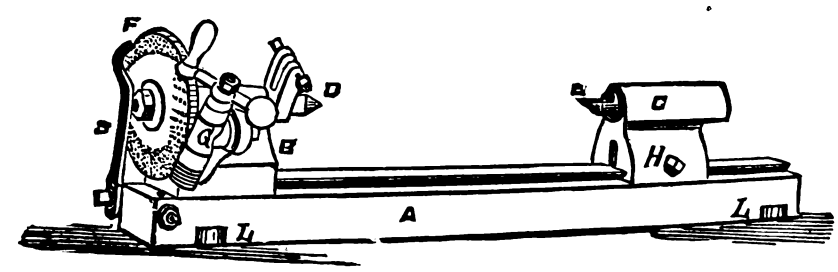

Fig. 1622.

by the worm G. At S is a spring carrying at its end the pin for the index holes. To bring this pin opposite to the requisite circle of holes, the bolt holding S to A is eased back and S moved as required. On the live centre D is a clamp for securing the work or mandrel holding dog. Head C is split as shown, and is held to the surface of A by the bolt H, which is tapped into the metal on one side of the split.

It is obvious that polygons may be planed by placing the work between the centres and rotating it by means of G after each successive side of the polygon has been planed or shaped, the number

of sides being determined by the amount of rotation of the index plate.

Fig. 1623 shows a useful chuck for holding cylindrical work, such as rolls. The base is split at E, so that by means of the bolt and

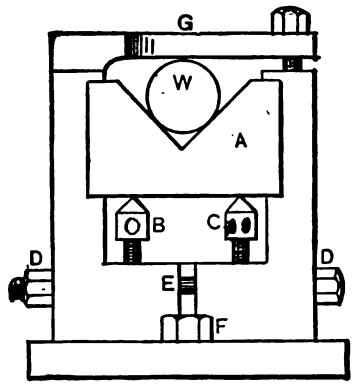

Fig. 1623.

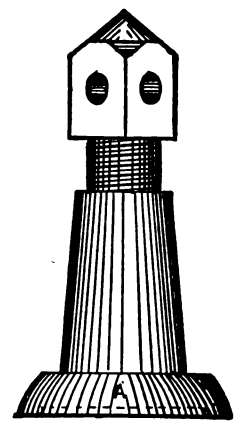

Fig. 1624.

nut D the V-block A may be gripped firmly; B and C are screws for adjusting the height of the V-block A. At F is the bolt for clamping the chuck to the planer table, and G is a cap to clamp the work W in the block A. It will be seen that this chuck can be set for taper as well as parallel work.

Fig. 1624 represents a chucking device useful for supporting or

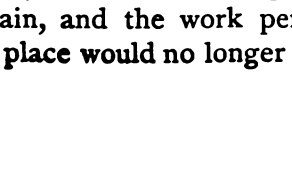

Fig. 1625.

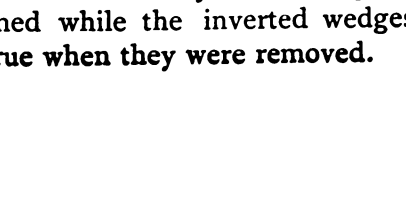

Fig. 1626.

packing up work, or for adjusting it in position ready to fasten it to the work table, it being obvious that its hollow seat at A enables it to set steadily upon the table, and that its screw affords a simple means of adjusting its height. It may also be used between the jaws of a connecting rod strap or other similar piece of work to support it, as in Fig. 1625, and prevent the jaws from springing together under the pressure of the tool cut.

Another and very useful device for this purpose is shown in Fig. 1626, consisting of a pair of inverted wedges, of which one is dovetailed into the other and having a screw to operate them endwise, the purpose being to hold the two jaws the proper distance apart and prevent their closure under pressure of the planer vice jaws. It is obvious that the device in Fig. 1625 is most useful for work that has not been faced between the jaws, because the device in Fig. 1626 would, upon rough work that is not true, be apt to spring the work true with the inside faces, which may not be true with the outside ones, and when the wedges were removed the jaws would spring back again, and the work performed while the inverted wedges were in place would no longer be true when they were removed.

Fig. 1627 represents a centre chuck to enable the cutting of spirals. The principle of the design is to rotate the work as it traverses, and this is accomplished as follows:—

Upon the bed of the machine alongside of the table is bolted the rack A A, into which gears the pinion B, which is fixed to the same shaft as the bevel-gear C, which meshes with the bevel-wheel D. Upon the same shaft as D is the face plate E, and in the spindle upon which D and E are fixed is a centre, so that the plate E answers to the face plate of a lathe. F is a bearing for the shaft carrying B and C, and G is a bearing carrying the spindle to which E and D are fixed. H is a standard carrying the screw and centre, shown at I, and hence answers to the tailstock of a lathe. K represents a frame or plate carrying the bearings F and G, and the standard H. L represents the table of the planing machine to which K is bolted. The reciprocating motion of the table L causes the pinion B to revolve upon the rack A A. The pinion B revolves C, which imparts

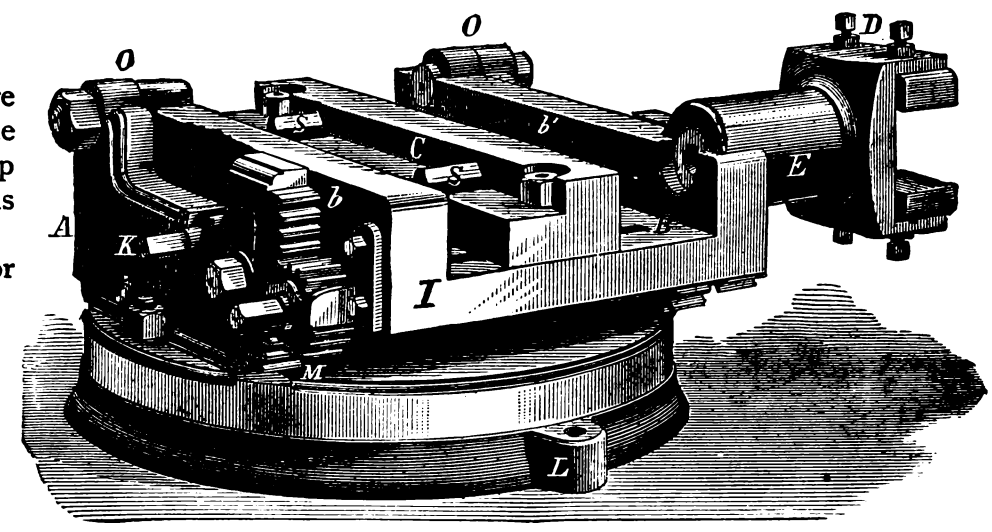

Fig. 1628.

its motion to D, and the work W being placed between the centres as shown, is revolved in unison with E, revolving in one direction when the table K is going one way, and in the other when the motion of the table is reversed; hence a tool in the tool post will cut a spiral groove in the work.

To enable the device to cut grooves of different spirals or twist, all that is necessary is to provide different sizes of wheels to take the places of C and D, so that the revolutions of E, and hence of the work W, may be increased or diminished with relation to the revolutions of B; or, what is the same thing, to a given amount of table movement, or a stud may be put in so as to enable the employment of change gears.

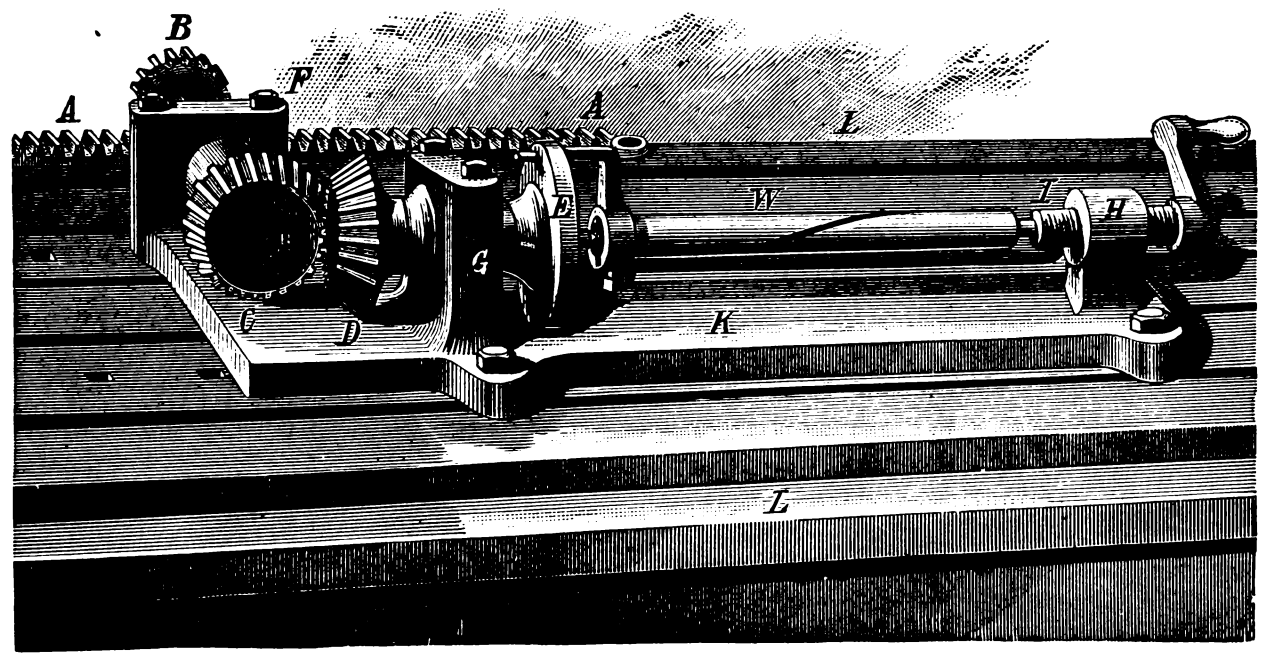

Fig. 1627.

Figs. 1628 and 1629 represent a universal planer chuck, designed and patented by John H. Greenwood, of Columbus, Ohio, for planing concave or convex surfaces, as well as ordinary plane ones, with the cross feed of the common planer.

The base L of the chuck is bolted to the planer work table in the ordinary manner.

The work-holding frame or vice is supported, for circular surfaces, by being pivoted to the base at O, O, and by the gibbed head D, which has journal bearing at E. The work is held between the stationary jaw *b* or *b'* (at option) and the movable jaw C which may face either *b* or *b'* (by turning C round). Suppose then, that while the chuck is passing the cutting tool, end I of the work-holding frame is raised, lifting that end of the work above the horizontal level (the work-holding frame swinging at the other end on the pivots O, O), then the tool will obviously cut a convex surface. Or if end I of the work-holding frame be lowered while the cut is proceeding, the tool will cut a concave surface.

Now end I is caused to rise or lower as follows :—The head D is adjusted by means of its gibs to be a sliding fit on the bar G in Fig. 1629, which bar is rigidly fixed at P to the planer bed; hence as the planer table and the chuck traverse, D slides along bar G. If this bar is fixed at an angle to the length of the planer head, D must travel at that same angle, causing end I of the work-holding frame to rise or lower (from O, O, as a centre of motion) as it traverses according to the direction of motion of the planer table.

Suppose that in Fig. 1629, the planer table is moving on the forward or cutting stroke, then head D will be moving towards the point of suspension P of the bar G, and will therefore gradually lower as it proceeds, thus lowering end I of the work-holding frame and causing the curved link to pass beneath the tool with a curved motion or suppose the table to be on its cutting traverse, then head D will be raised as the table moves and the cut proceeds, and the surface cut by the tool will be concave.

Now, suppose that the bar G were fixed at an angle, with its end, that is towards the back end of the planer, inclined towards the table instead of away from it as in Fig. 1629, and then on the cutting traverse head D would cause end I (Fig. 1628) of the work-holding vice or frame to lower as the cut proceeded, and the tool would therefore plane a convex surface.

Thus the direction of the angle in which G is fixed governs whether the surface planed shall be a concave or a convex one, and it is plain that the amount of concavity or convexity will be governed and determined by the amount of angle to which G is set to the planer table.

When the chuck is not required to plane curved surfaces the bar

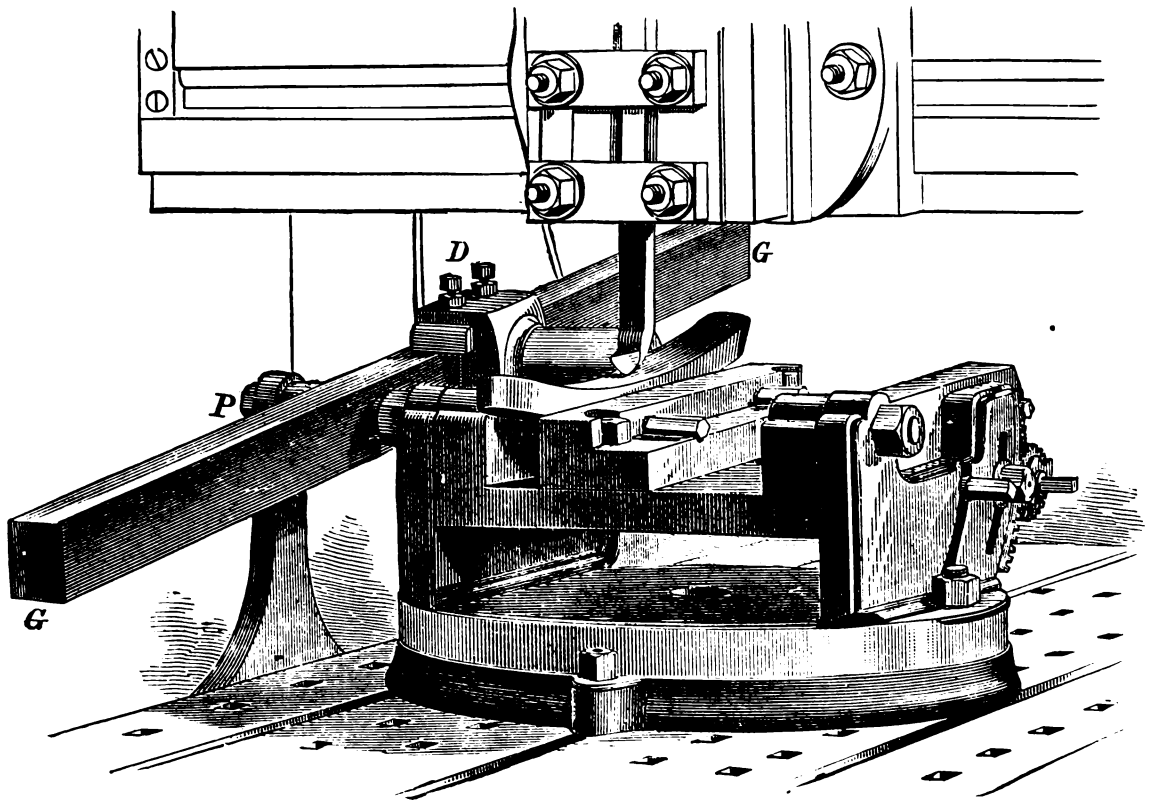

Fig. 1629.

G is altogether dispensed with, and the chuck becomes an ordinary one possessing extra facilities for planing taper work.

Thus for taper work the work-holding frame may be set out of parallel with the base of the chuck to an amount answering to the required amount of taper, being raised or lowered (as may be most convenient) at one end by means of the gears M, of which there is one on each side meshing into the segmental rack shown, the work-holding frame being secured in its adjusted position by means of a set bolt.

To set the work-holding frame parallel for parallel planing, a steady pin is employed, the frame being parallel to the base when that pin is home in its place.

The construction of the chuck is solid, and the various adjust-

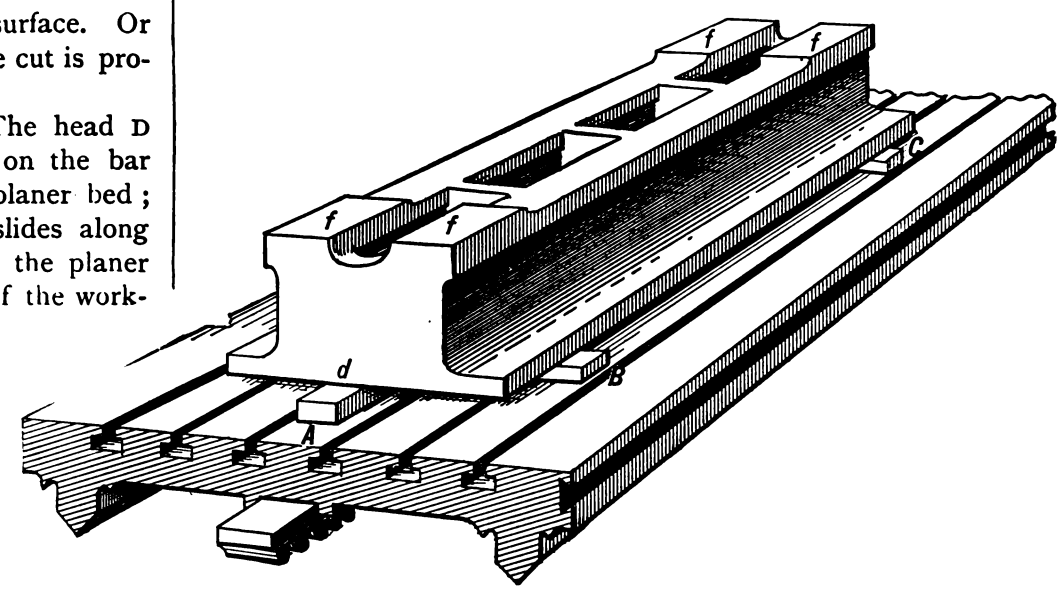

Fig. 1630.

ments may be quickly and readily made, giving to it a range of capacity and usefulness that are not possessed by the ordinary forms of planer chucks.

PLANING MACHINE BEDS.—In long castings such as lathe or planer beds, the greatest care is required in setting the work upon the planer table, because the work will twist and bend of its own weight, and may have considerable deflection and twist upon it notwithstanding that it appears to bed fair upon the table. To avoid this it is necessary to know that the casting is supported with equal pressure at each point of support. In all such work the surface that is to rest upon the foundation or legs should be planed first.

Thus supposing the casting in Fig. 1630 to represent a lathe shears, the surfaces *f* whereon the lathe legs are to be bolted should be planed first, the method of chucking being as follows :—

The bed is balanced by two wedges A, in Fig. 1630, one being placed at each end of the bed, and the position of the wedges being adjusted so that it lies level. A line coincident with the face of the bed (as face *d*) is then drawn across the upper face of each wedge. Wedges (as B, C,) are then put in on each side of the bed until they each just meet the bed,

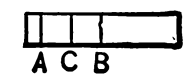

Fig. 1631.

and a line coincident with the bed surface is drawn across their upper surfaces. Wedge B is then driven in until it relieves A of the weight of the bed, and a second line is drawn across its upper face. It is then withdrawn to the first line, and the wedge on the opposite side of the bed is driven in until A is relieved of the weight, when a second line is drawn on this wedge's face. The wedges at the other end (as C) are then similarly driven in and withdrawn, being also marked with two lines, and then the four wedges (B, C, and the two corresponding ones on the opposite side of the bed) are withdrawn, having upon their surfaces two lines each (as A, B, in Fig. 1631). Midway between these two lines a third (as C) is drawn, and all four wedges are then driven in until line C is coincident with the bed surface, when it may be assumed that the bed is supported equally at all the four

points. When the bed is turned over, surfaces *f* may lie on the table surface without any packing whatever, as they will be true.

Another excellent method is to balance the bed on three points, two at one end and one at the other, and to then pack it up equally at all four corners.

To test if the surface of a piece of such work has been planed straight, the following plan may be pursued :—

Suppose that surface E, Fig. 1632, is to be tested, it having been planed in the position it occupies in the figure, and the casting may be turned over so that face E stands vertical, as in Fig. 1632, and a tool may be put in the tool post of the planer, the bed being adjusted on the planer table so that the tool point will just touch the surface at each end of the bed. The planer table is then run so that the tool point may be tried with the middle of the bed length,

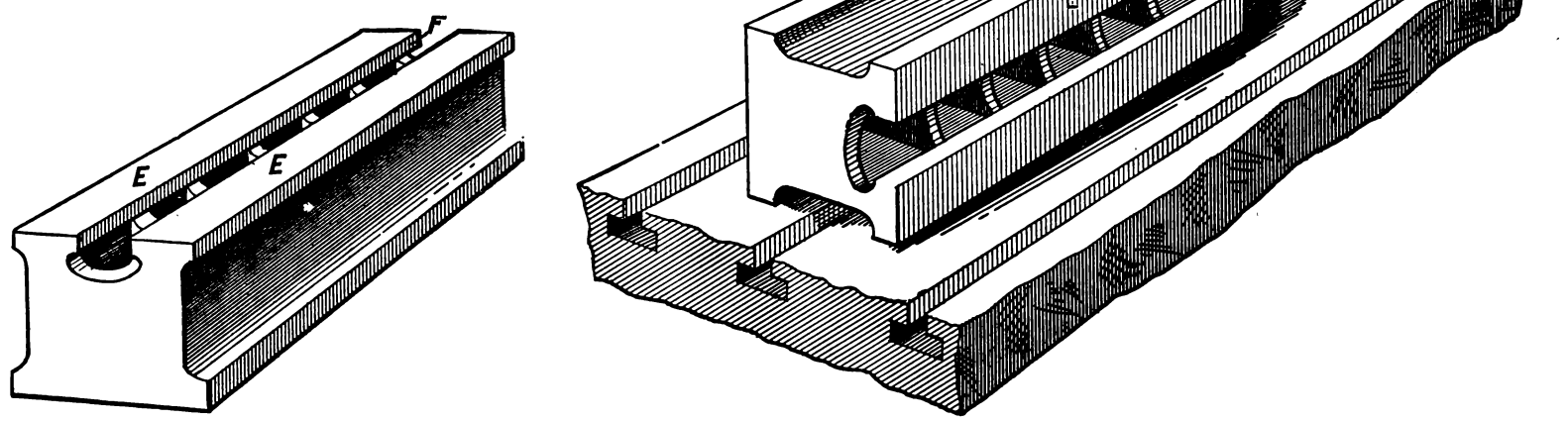

Fig. 1632.

when, if the face E is true, it will just meet the tool point at the middle of its length as well as at the ends.

In the planing of the V-guides and guideways of a bed for a machine tool, such as, for example, a planer bed and table, the greatest of care is necessary, the process being as follows :—

Beginning with the bed it has been shown in Fig. 1601 that the sides of the guideways must all be of the same height as well as at the same angle, and an excellent method of testing this point is as follows :—

In Fig. 1633 is shown at A a male gauge for testing the V-guideways in the bed, and at B a female gauge for testing those on the table. These two gauges are accurately made to the correct angle and width, and fitted together as true as they can be made, being corrected as long as any error can be found, either by testing one with the other or by the application of a surface plate to each separate face of the guides and guideways. The surfaces C and D of the respective gauges are made parallel with the V-surfaces, a point that is of importance, as will be seen hereafter. It is obvious that the female gauge B is turned upside down when tried upon the table.

Suppose it is required to test the sides *e*, *f*, of the bed guideways in Fig. 1634, and the gauge must be pulled over in the direction of

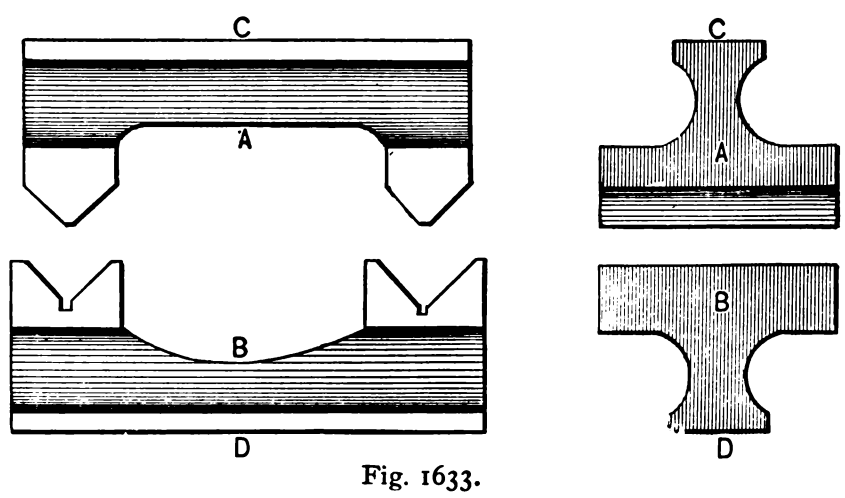

Fig. 1633.

the arrow so that it touches those two sides only ; a spirit-level laid upon the top of the gauge will then show whether the two faces *e*, *f*, are of equal height. It is obvious that to test the other two faces the gauge must be pulled over in the opposite direction.

This test must be applied while fitting the Vs to the gauge. Suppose, for example, that when the gauge is applied and allowed to seat itself in the ways, the two outside angles *e*, *g*, are found to bear while the two inside ones do not touch the gauge at all, then by this test it can be found whether the correction should be made by taking a cut off *e* or off *g*, for if the spirit-level stood level when the gauge was pulled in either direction, then both faces would require to be operated upon equally, but suppose that the gauge and spirit-level applied as shown proved end *e* to be high, then it would be the one to be operated on, or if when the gauge was pulled over in the opposite direction end *g* was shown (by the spirit-level) to be high, then it would be the one to be operated upon.

By careful operation the table and bed may thus be made to fit more perfectly than is possible by any other method. To test the fit of the gauge to the Vs it is a good plan to make a light chalk mark down each V and to then apply the gauge, letting it seat itself and moving it back and forth endways, when if it is a proper fit it will rub the chalk mark entirely out. It may be noted, however, that a light touch of red marking is probably better than chalk for this purpose.

It is of importance that the Vs be planed as smooth as possible, and to enable this a stiff tool holder holding a short tool, as in Fig.

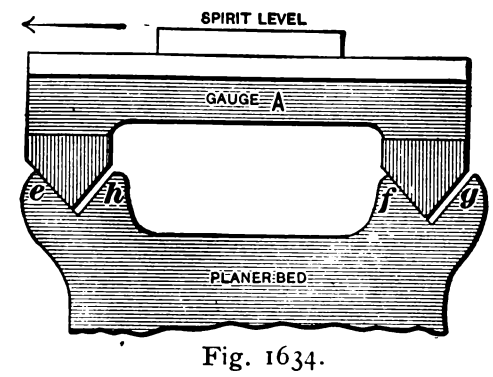

Fig. 1634.

1635 should be used, the holder being held close up to the tool box as shown. It will be obvious that when the head is set over to an angle it should be moved along the cross slide to plane the corresponding angle on the other side of the bed.

Fig. 1636 represents a planer chuck by Mr. Hugh Thomas. The angle piece A is made to stand at an angle, as shown, for cylindrical work, such as shafts, so that the work will be held firmly down upon the table. The base plate B has ratchet teeth at each end C, into which mesh the pawls D, and has slotted holes for the bolts which hold it down to the table, so that it has a certain range of movement to or from the angle piece A, and may therefore be adjusted to suit the diameter or width of the work.

The movable jaw E is set up by the set-screw F and is held down by the bolts shown. The pawls D are constructed as shown in Fig. 1637, the pin or stem S fitting the holes in the planer table and the tongue P being pivoted to the body R of the pawl. As the pawls can be moved into any of the holes in the table, the base plate B may be set at an angle, enabling the chuck to be used for taper as well as for parallel work, while the chuck has a wide range of capacity.

In Fig. 1614 is shown a supplementary table for increasing the capacity of planer tables, and which has already been referred to, and Fig. 1638 represents an application of the table as a chucking device. A, A, &c., are frames whose upper surfaces are to be planed. An angle plate is bolted to the planer table and the supplementary

table is bolted to the angle plate. The first frame is set against the vertical face of the supplementary table, and the remaining ones

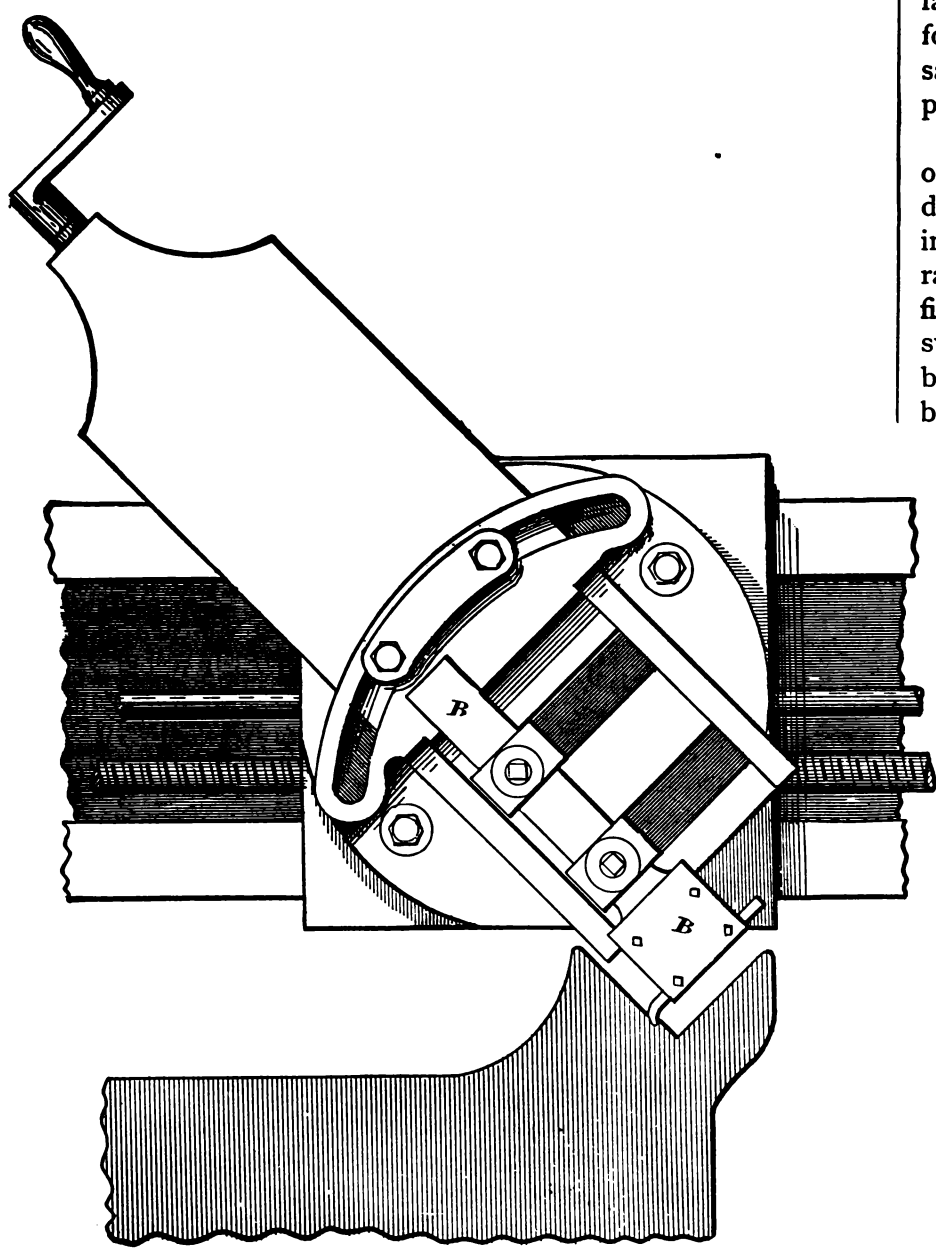

Fig. 1635.

set as near as possible, B, B, &c., being small blocks placed between the frames which are bolted to the planer table as at C.

In many cases this method of chucking possesses great advantages. Thus in the figure there are six frames to be planed, and as they would be too long to be set down upon the planer table, only three or four could be done at a time, and a good deal of measuring and trying would be necessary in order to get the second lot like the first. This can all be avoided by chucking the whole six at once, as in figure.

Another application of the same tables as useful chucking devices is shown in Fig. 1639, where two frames E, F, are shown bolted to the machine table and supported by the supplementary tables T, which are bolted to the main table and supported by angle-pieces *b*, *b*. Work that stands high up from the planer table may be very effectively steadied in this way, enabling heavier cuts and coarser feeds while producing smoother work.

As horizontal surfaces can be planed very much quicker than vertical ones, it frequently occurs that it will pay to take extra trouble in order to chuck the work so as to plane it horizontally, an excellent example being the planing of the faces of the two halves of a large pulley, the chucking of which is illustrated in Fig. 1640.

Four pieces, as at A, are made to engage the rims of the two halves of the pulley and hold them true, one with the other. The two plates T′ and T″ are set under the pulley halves to level the upper faces, and wooden clamps C, C, are bolted up to hold the pulleys together at the top, W representing wedges between the hubs. S represents supports to block up the pulley near its upper face, and at P are clamps to hold the two halves to the table. It is found that by this method of chucking more than half the time is saved, and the work is made truer than it is possible to get it by planing each half separately and laying them down on the table.

Supplemental tables may also be made in two parts, the upper one being capable of swiveling as in Fig. 1641, the swiveling device corresponding to that shown for the Thomas shaper chuck in Fig. 1530. This enables the work to be operated upon on several different faces without being released from the chuck. Thus in figure the segment could be planed on one edge and the upper table swiveled to bring the other edge in true with the table, which would be a great advantage, especially if the face it is chucked by has not been trued.

Figs. 1642 and 1643 show other applications of the same swiveling device.

It is obvious that the chuck shown in Fig. 1636 can be mounted on a supplemental and swiveling table as shown in Fig. 1644, thus greatly facilitating the chucking of the work and facilitating the means of presenting different surfaces or parts of the work to the tool without requiring to unchuck it. The pawls, also, may in heavy work have two pins to enter the work-table holes and be connected by a strap as in Fig. 1645.

In the exigencies of the general machine shop it sometimes happens that it is required to plane a piece that is too wide to pass between the uprights of the planing machine, in which case one standard or upright may be taken down and the cross slide bolted to the other, as in Fig. 1646, the blocks *a*, *a*, being necessary on account of the arched form of the back of the cross slide. In the example given the plates to be planed were nearly twice as wide as the planer table and were chucked as shown, the beam D resting on blocks E, F, and forming a pathway for the piece C, which was provided with rollers at each end so as to move easily upon D. The outer end of the plate was clamped between B and C, and the work was found to be easily and rapidly done. In this chucking, however, it is of importance that beam D be carefully levelled to stand parallel with the planer table face, while its height must be so adjusted that it does not act to cant or tilt the table sideways as that would cause one V of the planer ways to carry all or most of the weight, and be liable to cause it to cut and abrade the slide surfaces.

CUTTING TOOLS FOR SHAPING AND PLANING MACHINES.—All the cutting tools forged to finished shape from rectangular bar steel, and described in connection with lathe work, are used in the

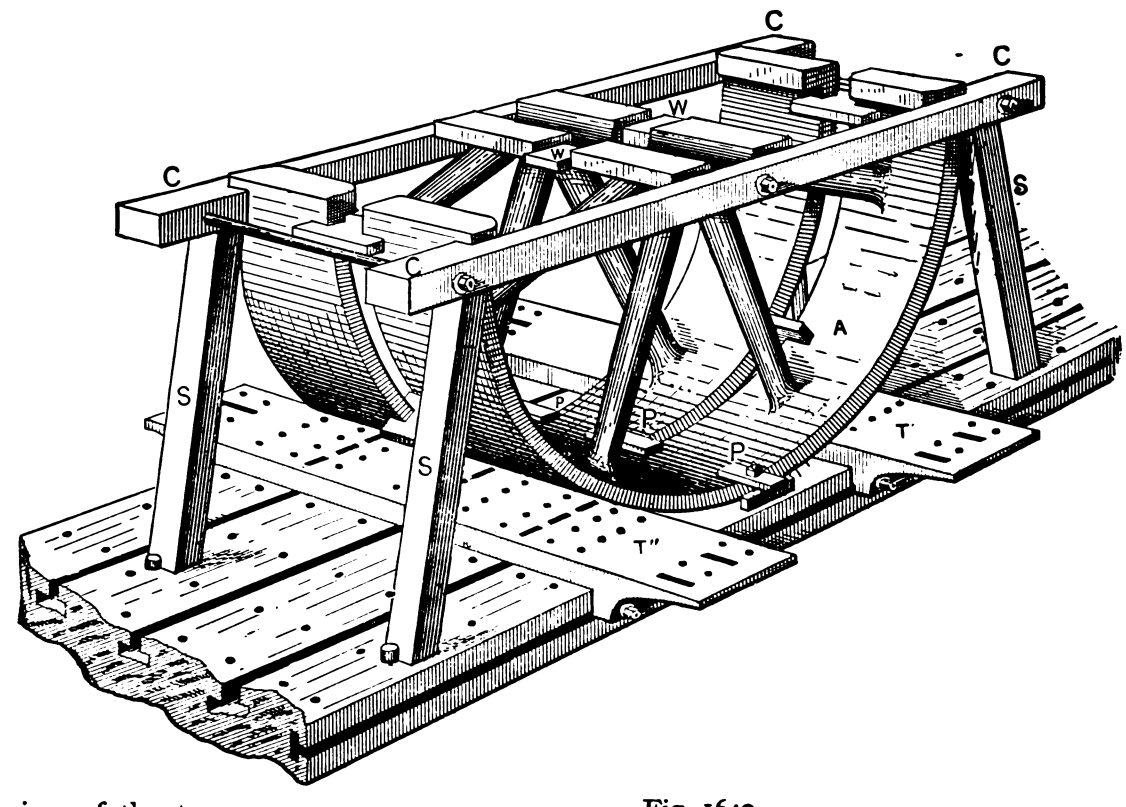

Fig. 1640.

planer and in the shaper, and the principles governing the rake of the top face remain the same. But in the matter of the clearance

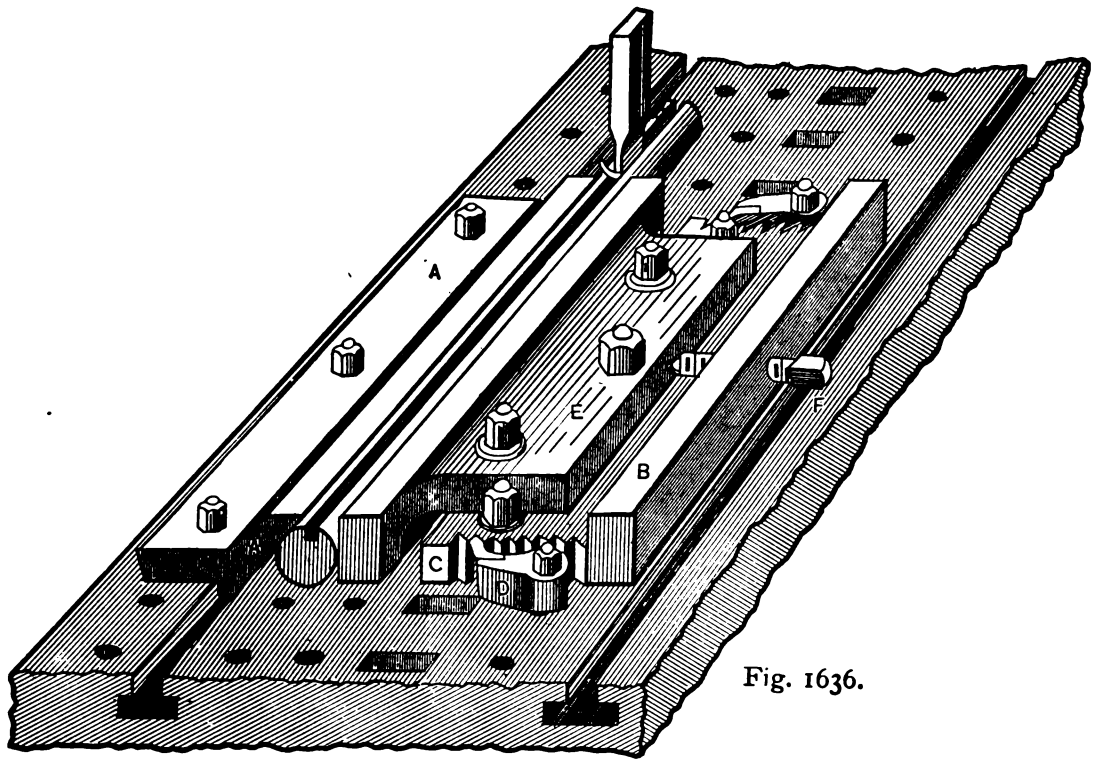

Fig. 1636.

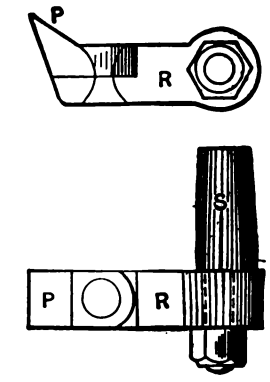

Fig. 1637.

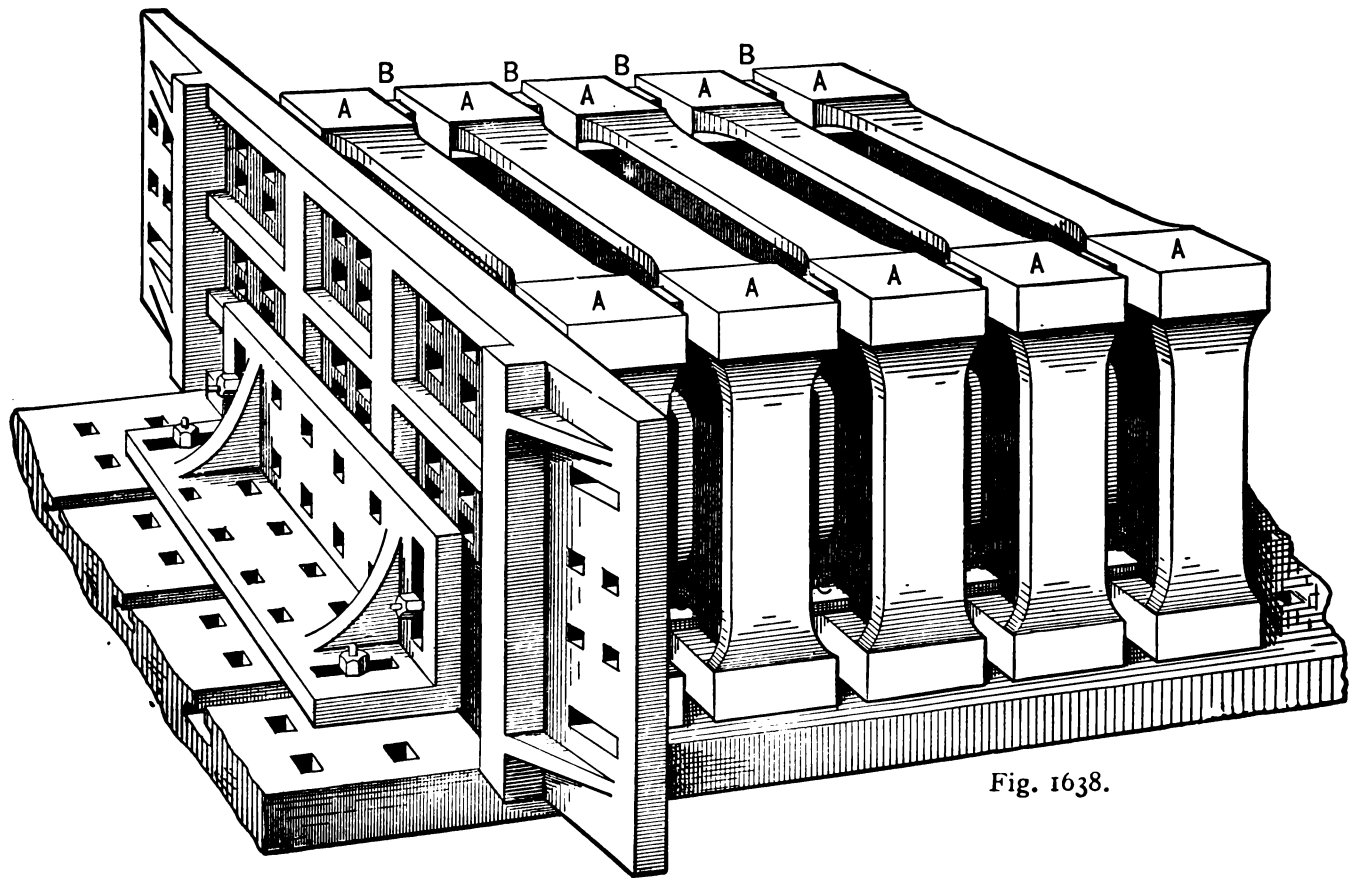

Fig. 1638.

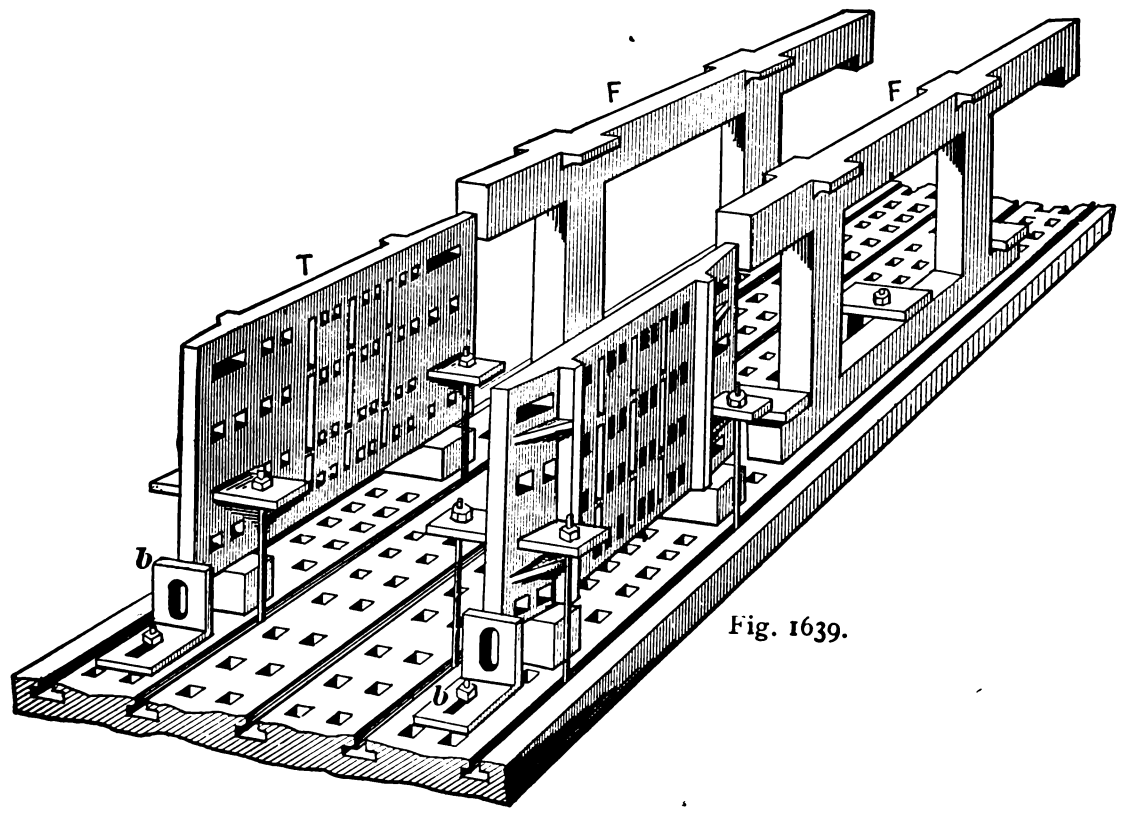

Fig. 1639.

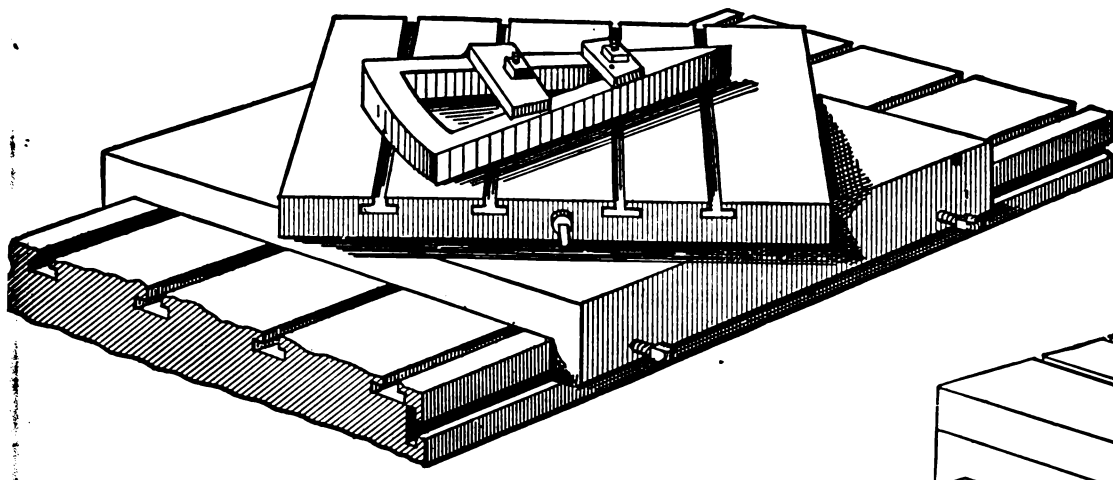

Fig. 1641.

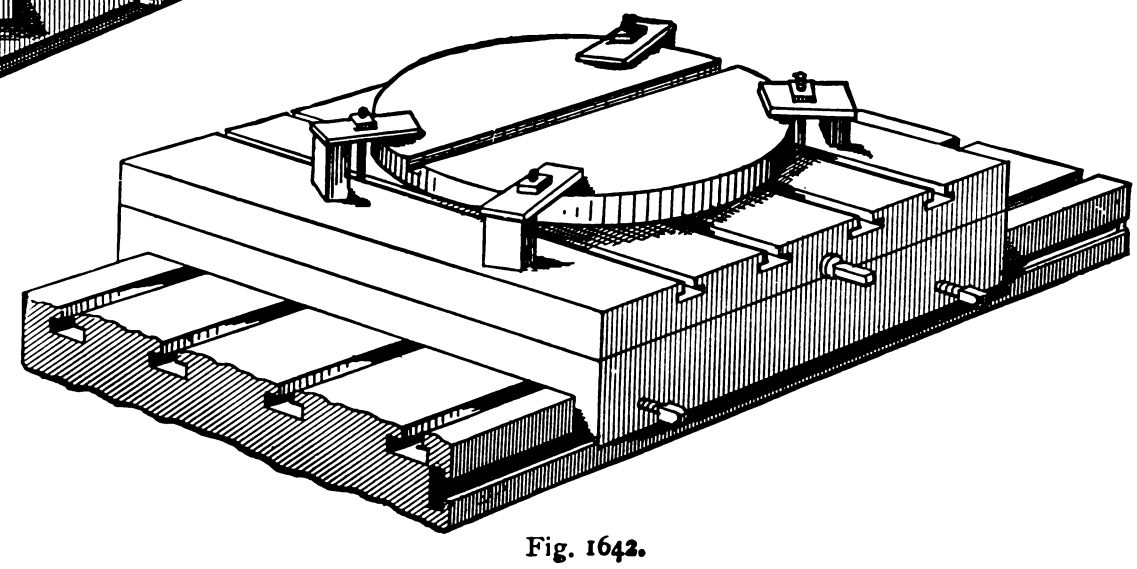

Fig. 1642.

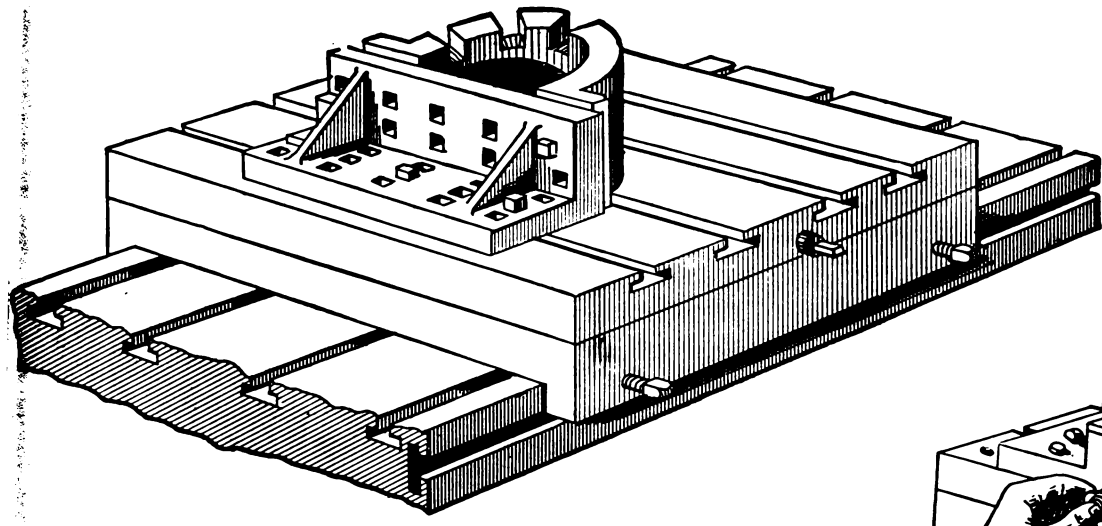

Fig. 1643.

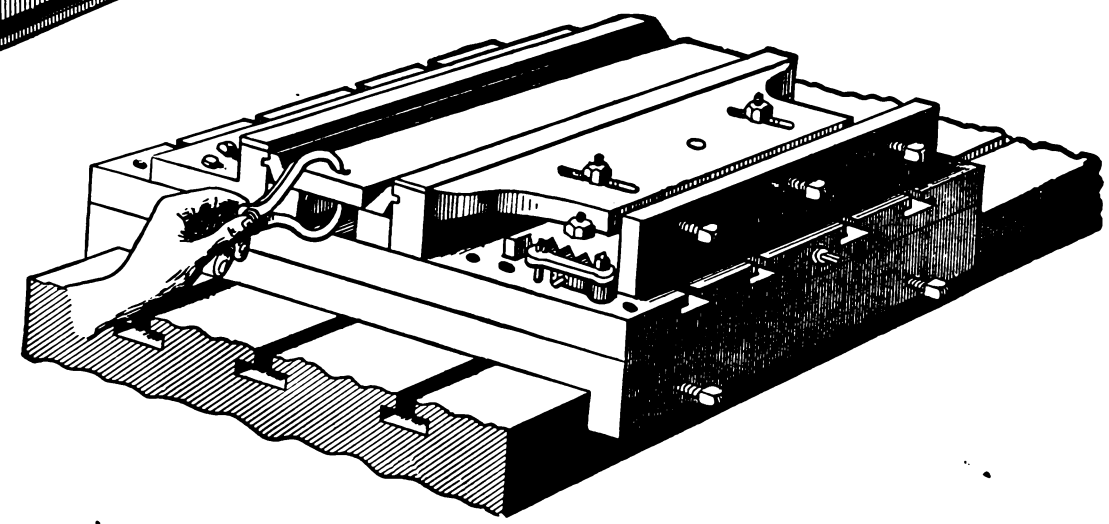

Fig. 1644.

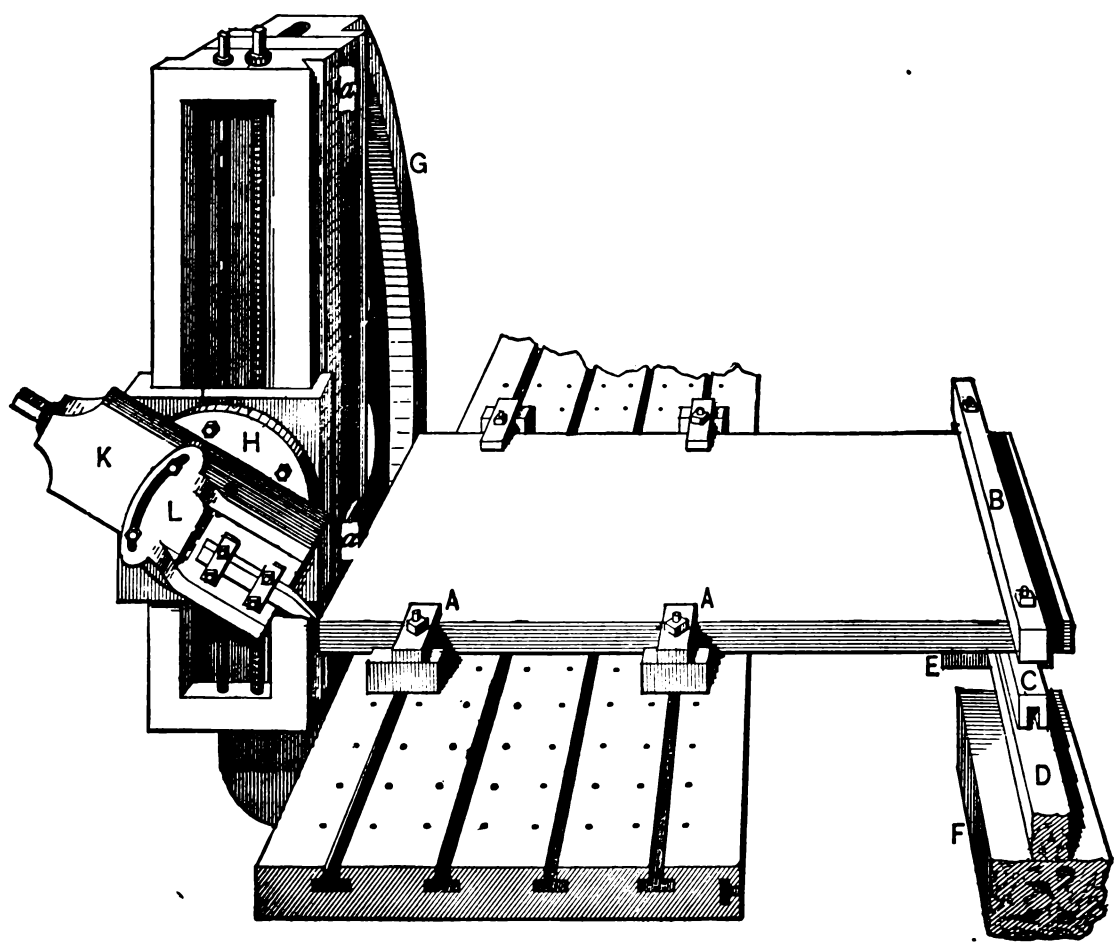

Fig. 1646.

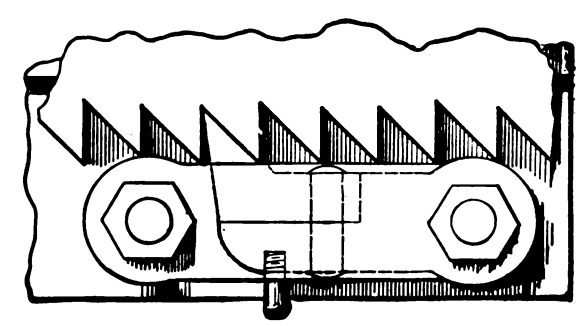

Fig. 1645.

there is the difference that in a planing tool it may be made constant, because the tool feeds to its cut after having left the work surface at the end of the back stroke, hence the clearance remains the same whatever the amount or rate of feed may be.

On this account it is desirable to use a gauge as a guide to grind

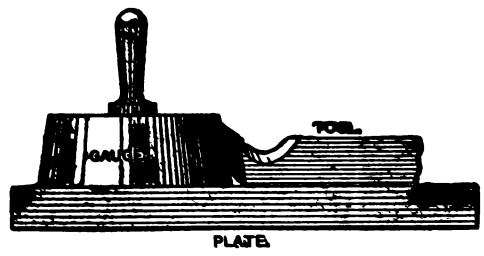

Fig. 1647.

the tool by, the application of such a gauge being shown in Fig. 1647. It consists of a disk turned to the requisite taper and laid upon a plate, whereon the tool also may be laid to test it. The tool should not be given more than 10° of clearance, unless in the case of broad flat-nosed tools for finishing, for which 5° are sufficient.

The principle of pulling rather than pushing the tool to its cut,

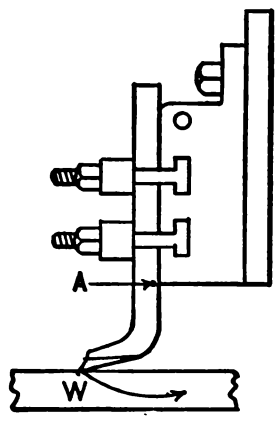

Fig. 1648.

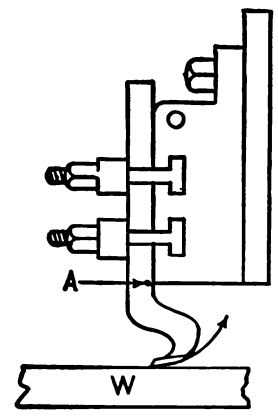

Fig. 1649.

can, however, be more readily and advantageously carried out in planer than in lathe tools, because the spring of the tool and of the head carrying it only need be considered, the position of the tool with relation to the work being otherwise immaterial. As a consequence it is not unusual to forge the tools to the end of pulling, rather than of pushing the cutting edge.

In Figs. 1648 and 1649, for example, are two tools, W representing

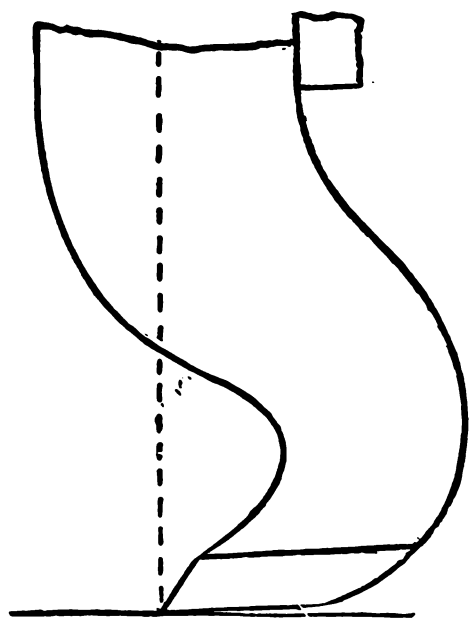

Fig. 1650.

the work, and A the points off which the respective tools will spring in consequence of the pressure; hence the respective arrows denote the direction of the tool spring. As a result of this spring it is obvious the tool in Fig. 1648 will dip deeper into the work when the pressure of the cut increases, as it will from any increase of the depth of the cut in roughing out the work, or from any seams or hard places in the metal during the finishing cut. On the other hand, however, this deflection or spring will have the effect of releasing the cutting edge of the tool from contact with the work surface during the back stroke, thus rendering it unnecessary to lift the tool to prevent the abrasion, on its back stroke, from dulling its cutting edge.

It will be noted that the radius from the point of support A is less for the tool in Fig. 1649 than for that in Fig. 1648, although both tools are at an equal height from the work, which enables that in Fig. 1649 to operate more firmly. In these two figures the extremes of the two systems are shown, but a compromise between the two is shown in Fig. 1650, the cutting edge coming even with the centre

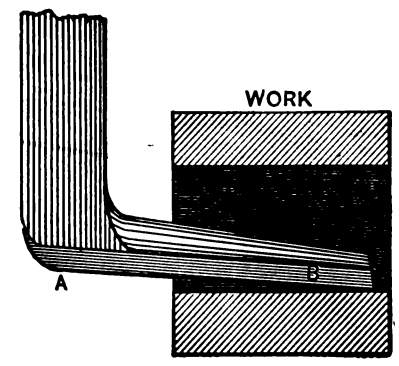

Fig. 1651.

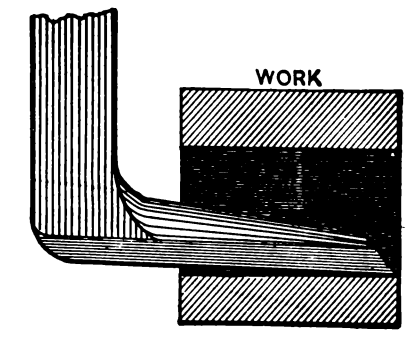

Fig. 1652.

of the body of the steel, which makes the tool easier to forge and grind, and keeps the cutting edge in plainer view when at work, while avoiding the evils attending the shape shown in Fig. 1648.

It is sometimes necessary, however, that a tool of the form in Fig. 1652 be used, as, for example, to shape out the surface of a slot, and when this is the case the tool should be shaped as in Fig. 1651, the bottom face having ample clearance (as, say, 15°) from the heel A to about the point B, and about 3° from B to the front end. The front face should have little or no clearance, because it causes the tool to dig into the work. A tool so shaped will clear itself well on the back stroke, whereas if but little clearance and front rake be given as in Fig. 1652, the tool will not only dig in, but its cutting edge will rub on the back or return stroke.

For broad feed finishing cuts the shape of tool shown in Fig. 1653 is employed, the cutting edge near the two corners being eased off very slightly with the oilstone. The amount of clearance should be

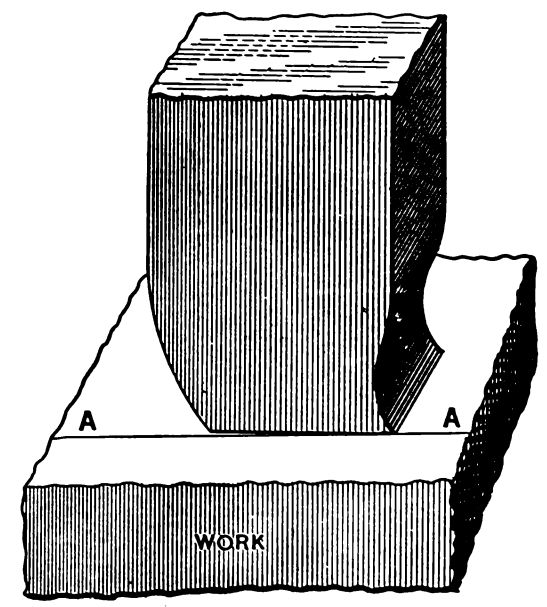

Fig. 1653.

very slight indeed, only just enough to enable the tool to cut as is shown in the figure, by the line A A. The amount of front rake may be varied to suit the nature and hardness of the metal, and the tool should be held as close in as possible to the tool clamp.

Smoother work may be obtained in shaping and in planing machine tools when the tool is carried in a holder, such as in Fig. 1654, which is taken from *The American Machinist*, because in this case any spring or deflection either in the tool or in the shaper head acts to cause the tool to relieve itself of the cut instead of digging in, as would be the case were the tool put in front of the tool post as in Fig. 1654.

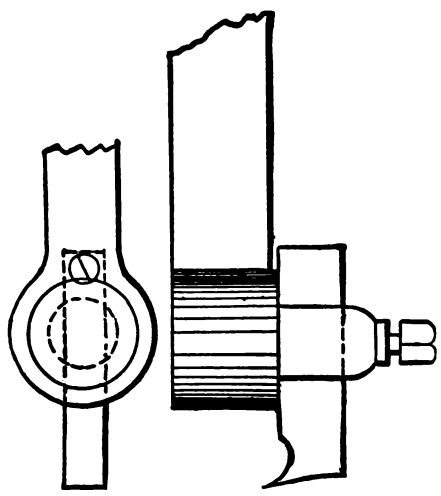

Fig. 1654.

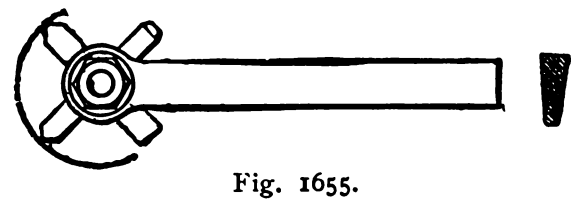

Fig. 1655.

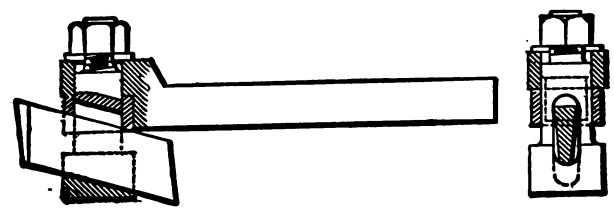

Fig. 1656.

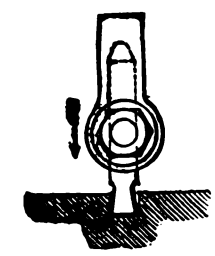

End Elevation.

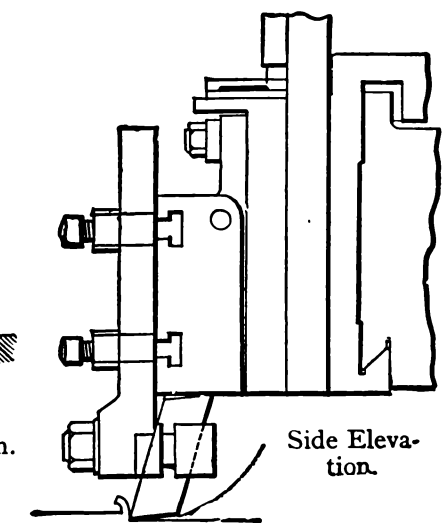

Side Elevation.

Fig. 1657.

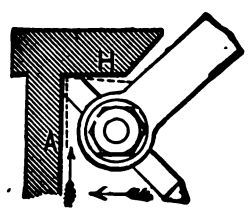

Fig. 1658.

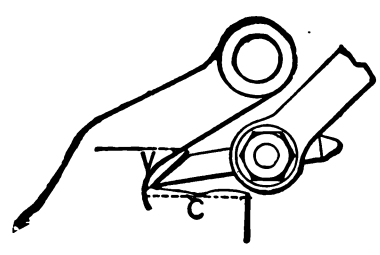

Fig. 1659.

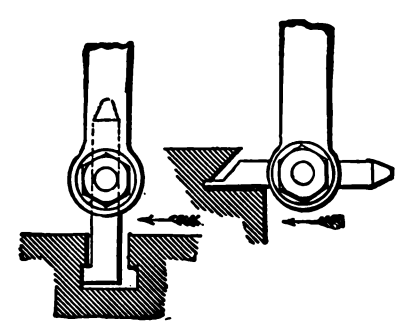

Fig. 1660.

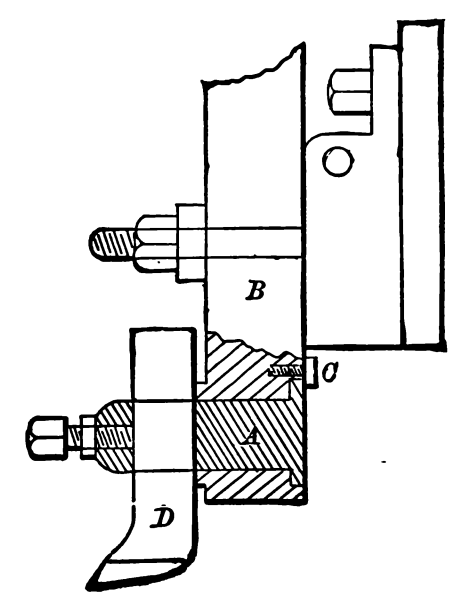

Fig. 1661.

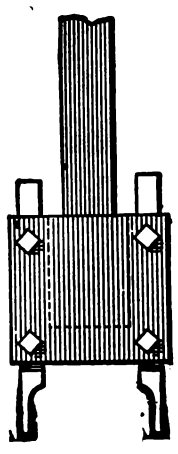

Fig. 1662.

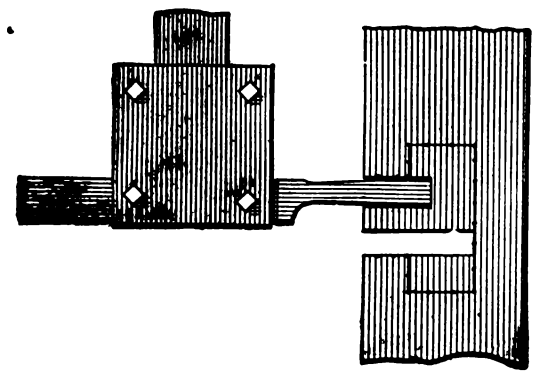

Fig. 1663.

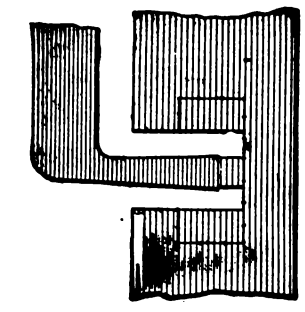

Fig. 1664.

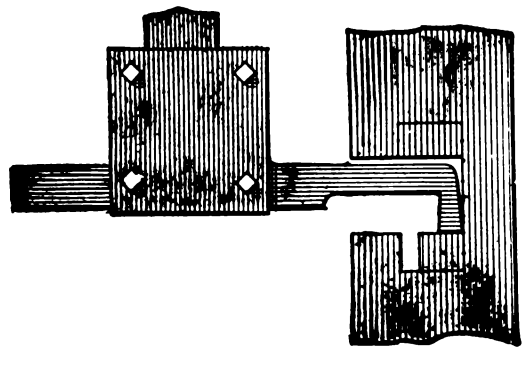

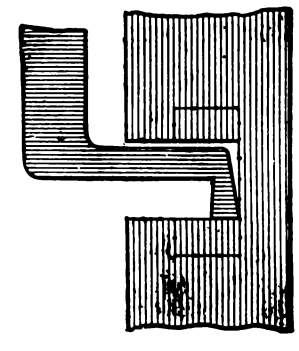

Fig. 1665.

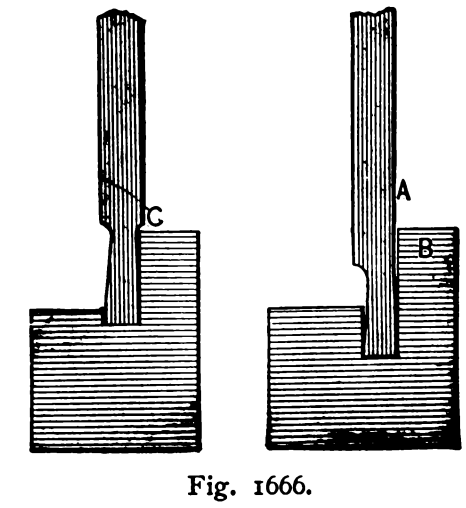

Fig. 1666.

TOOL HOLDERS FOR PLANING MACHINES.—The advantages of tool holders for planing machines are equally as great as those already described for lathes.

Fig. 1655 represents a planer tool holder (by Messrs. Smith & Coventry), with what is, in effect, a swivel tool post attached to the end of the holder, thus enabling the tool to be used on either the right or left hand of the holder at will. The shape of the tool steel is shown in section on the right hand of the engraving, being narrow at the bottom, which enables the tool to be very firmly held and reduces the area to be ground in sharpening the tool. A side and end view of the holder is shown in Fig. 1656, in which it is seen that the tool may be given top rake or angle to render it suitable for wrought iron or steel or may be set level for brass work.

In Fig. 1657 the tool and holder are shown in position on the planer head, the front rake on the tool being that suitable for wrought iron.

It is to be noted, however, that the amount of front rake should, to obtain the best results, be less for steel than for wrought iron, and less for cast iron than for wrought, while for brass there should be none ; hence the tool post should be made to accomplish these different degrees of rake in order to capacitate such holders for the four above-named metals. It is an advantage, however, that by inclining the tool to give the top rake, this rake may be kept constant by grinding the end only of the tool to sharpen it, and as the end may be ground to a gauge it is very easy to maintain a constant shape of tool. Furthermore, as the tool is held by one binding screw only, it may be more readily adjusted in position for the work than is the case when the two apron clamp nuts require to be operated.

Figs. 1658 to 1660 show this tool holder applied to various kinds of work. Thus in Fig. 1658 the tool is planing under the underneath side of a lathe bed flange, while in Fig. 1659 it is acting upon a V-slideway and escaping an overhanging arm, and in Fig. 1660 it is shown operating on a V-slideway and in a T-groove.

Another form of planer or shaper tool holder is shown in Fig. 1661, in which a tool post is mounted on a tool bar, and may be used as a right or left hand tool at will.

Fig. 1662 represents a tool holder in which two tools may be held as shown, or a single tool right hand or left hand as may be required, or the tool may be held at the end of the holder as in Fig. 1663. The advantage of such a holder is well illustrated in the case of cutting out a T-shaped groove, because with such a holder a straight tool can be used for the first cuts, its position being shown in Fig. 1663 ; whereas in the absence of such a holder a tool bent as in Fig. 1664 would require to be used, this bend giving extra trouble in the forging, rendering the tool unfit for ordinary plain work, and being unable to carry so heavy a cut or to cut so smooth as the straight tool in Fig. 1663. In cutting out the widest part of such a groove the advantage of the holder is still greater, because by its use a tool with one bend, as in Fig. 1665, will serve; whereas without a holder the tool must have two bends, as shown in the figure, and would be able to carry a very light cut, while liable to dig into the work and break off.

The tool itself should be so forged that one side is flush with the side of the tool steel, as shown at A in Fig. 1666, for if there is a shoulder, as at C, it may prevent the tool from entering the work.

Chapter XVIII.—DRILLING MACHINES.

Power Drilling Machines.—The drilling machine consists essentially of a rotating spindle to drive the drill, a work-holding table, and means of feeding the drill to its cut. The spindle speed and the force with which it is driven are varied to suit the work. The feeding is sometimes given to the spindle, and at others to the work table. In either case, however, the feeding mechanism should be capable of varying the rate of feed and of permitting a quick withdrawal of the drill. The spindle should be supported as near to its drill-holding end as possible. When the table feeds to the work the spindles may be held rigidly, because of their not requiring to pass so far out or down from the bearing supporting them; but when the spindle feeds, it must either pass through its bearings, or the bearing, or one of them must either be capable of travel with the spindle or adjustable with relation to the machine framing.

A Turret Drilling Machine, designed and constructed by A. D. Quint, of Hartford, Conn., is shown as follows :

Fig. 1666*a* illustrates the No. 1 machine, which consists of a framework carrying a turret head provided with six spindles, either of which can be moved by hand so as to come into line ready to operate on the work, the remaining five being out of gear and at rest. Figs. 1667 and 1668 show the construction of the machine.

The cone pulley E at the side of the head is on a short shaft, at the other end of which there is a bevel gear F made of rawhide, with the object of securing absolutely quiet running. This rawhide gear engages with two other gears, G H, which, of course, thus revolve in opposite directions. One of these, H, is on a shaft which passes through the front of the turret and carries the bevel friction wheel C. The other gear, G, is on the end of a sleeve, the other end of which carries the bevel friction B, these two frictions revolving in opposite directions in contact with the smaller bevel wheels A A', etc., which are placed on the ends of the respective drill spindles.

One effect of this arrangement is to very much increase the driving power, and also to relieve the spindles from side pressure due to the friction wheels, since the pressure on A is balanced from opposite sides, and all the pressure brought upon the friction wheel is made use of in driving the drill spindles.

The turret revolves upon a trunnion which is independent of the shaft bearings, and eccentric to it, its centre being sufficiently above that of the shafts on which the bevel driving wheels are placed to disconnect, from the larger wheels, all but the wheel which is on the spindle that is in position for work, and all others do not revolve except as they are successively brought into position to operate.

The boxes in which the spindles run are threaded near the lower ends, as shown, and provided with a check nut, or ring, by means of which they may be adjusted radially to bring more or less pressure on the friction wheels, and by this means it is practicable to so adjust the friction for any spindle doing light work, where there is danger of breaking the drill or other tool, that it will just drive it when working properly, but slip if any unusual obstacle is encountered.

A stop pin holds the turret in proper position, this pin being withdrawn by means of the foot treadle J at the left of the machine, which is connected by the light rod to a bell crank seen at the rear of the turret, this crank being connected to the stop pin, which is of hardened steel ground true, and engages in hardened and ground bushings fixed in the turret. The turret locks itself in position automatically.

Both horizontal shafts are provided with means of endwise adjustment, by which the larger friction wheels are placed and kept in proper position. The feed is either by hand or foot treadle, as shown, the table being provided with a threaded rod with nuts for stops to limit its motion. An adjustable stop K is also provided, which may be used on any spindle, and which, coming in contact with the work, the fixture in which it is held, or the drill table, gauges the depth of the drilling.

Several drills, reamers, or counter bores may be fixed in their respective spindles, each with an independent stop which may be adjusted for various depths, and all brought to the centre of the table and in position for work without stopping the machine or moving the work. All tools or spindles not in use are up out of the way, and do not interfere with work of any size or character. The speed for different sizes of tools may be changed by the operator very quickly without leaving his position.

The No. 2 machine, illustrated in Fig. 1669, is designed for work that requires a more powerful and positive driving motion. In this machine bevel gears take the place of the friction cones, the following description being extracted from the patent (Figs. 1 and 8, Plate XCI.–C) :

To any machine frame, standard, or column, 1, is secured a frame, 2, with a circular hub, or trunnion, 3, projecting from one side, and in these parts are formed bearings for a shaft, 4, that is provided on one end with driving pulleys and on the other end with a bevel gear, 5. On this trunnion is mounted the hub, 6, of the drum shaped turret head, 7, that has any convenient number of radially projecting tubes, or sleeves, 8, in which are loosely supported the tool holding spindles, 9. These radially extending rotary tool holding spindles have, at their outer ends, openings, or chucks provided with binding and clamping nuts for receiving and grasping the shanks of the tools which it is desired to have ready for use in the machine, while their inner ends have flanges, or collars, 10, in the interior of the turret head, that hold the spindles against longitudinal movement, and on these flanges are formed clutching pins, or studs, 11, that project inward on opposite sides of the axes of the flanges for engagement with supplemental parts on the end of the driving spindle. After the turret head has been placed in position on the trunnion, a washer, or ring, 12, is put against the inner face of the head to take and regulate the longitudinal thrust of the head, and over this in the interior of the head by screws or bolts, 25, is fastened the gear case, 13, screws, 26, passing through the gear case and bearing against the washer at the end of the trunnion and holding the washer with the proper degree of tension so that it retains the turret head in correct position. In an opening in this gear case is a bevel gear, 14, located so as to mesh with the gear, 5, on the pulley shaft, 4, at the end of the trunnion. This gear case also loosely holds a driving spindle, 15, that passes through a perforation in the gear, 14, to which it is splined, so that while having a longitudinal movement independent of the gear the spindle rotates with it. The driving spindle, 15, on its lower end is provided with a flange that has pins, or studs, 16, adapted to mesh with the studs, 11, on the ends of the tool holding spindles so that the rotation of the driving spindle will rotate the tool holding spindle with which it is engaged. Pivoted to ears or lugs projecting from a portion of this stationary gear case in the interior of the head is a bell-crank lever, 17, one arm of which is forked and provided with pins that project into the groove, 18, in the driving spindle, 15, that the fork straddles, so that the spindle will be reciprocated when the lever is oscillated. The other arm of this lever is jointed to a pin, or bolt, 19, that has a free reciprocation in a perforation in the top of the gear case as the lever is oscillated so that its end can be passed into or out of the sockets, 20, made in the wall of the turret head, to lock or unlock the movable head. Connected with this locking bolt is a rod, 21, which is jointed to a bell-crank lever, 22, that is connected by a rod, 23, with a spring-lifted foot lever, 24, pivoted to the base of the tool. When the foot lever is depressed the rod, 21, causes the locking bolt to slide forward so that its end is drawn from the registering and locking socket, and allows the turret head to be turned freely, and this movement of the locking bolt oscillates the upper arm of the lever, 17, outward and the lower arm upward, which draws up with it the driving spindle, 15, that is splined to the gear, 14. The locking bolt will not again pass back until the head is turned so that the spindle with the desired tool is in proper position, and the correct socket registers with the lock-

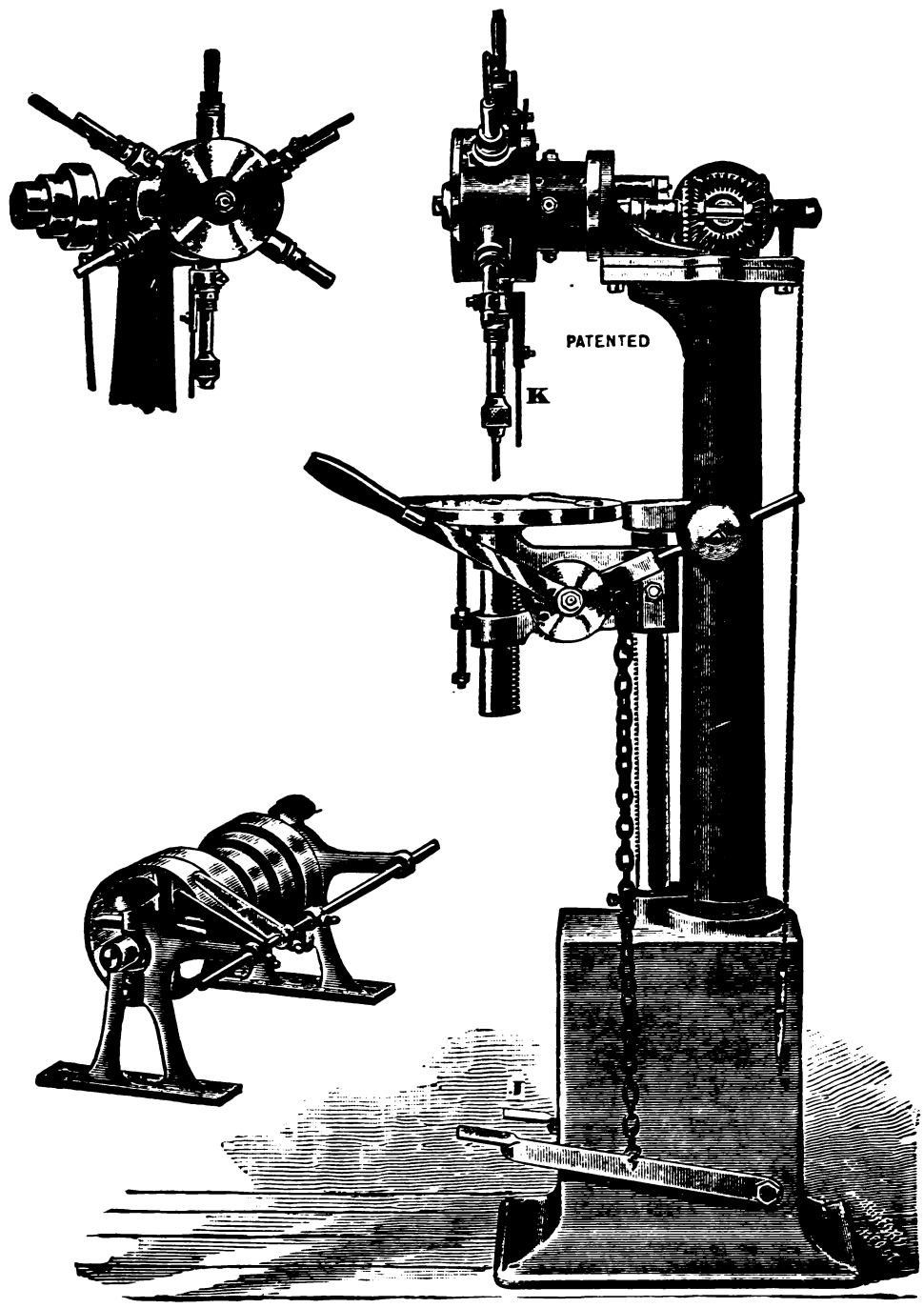

Fig. 1666*a*.

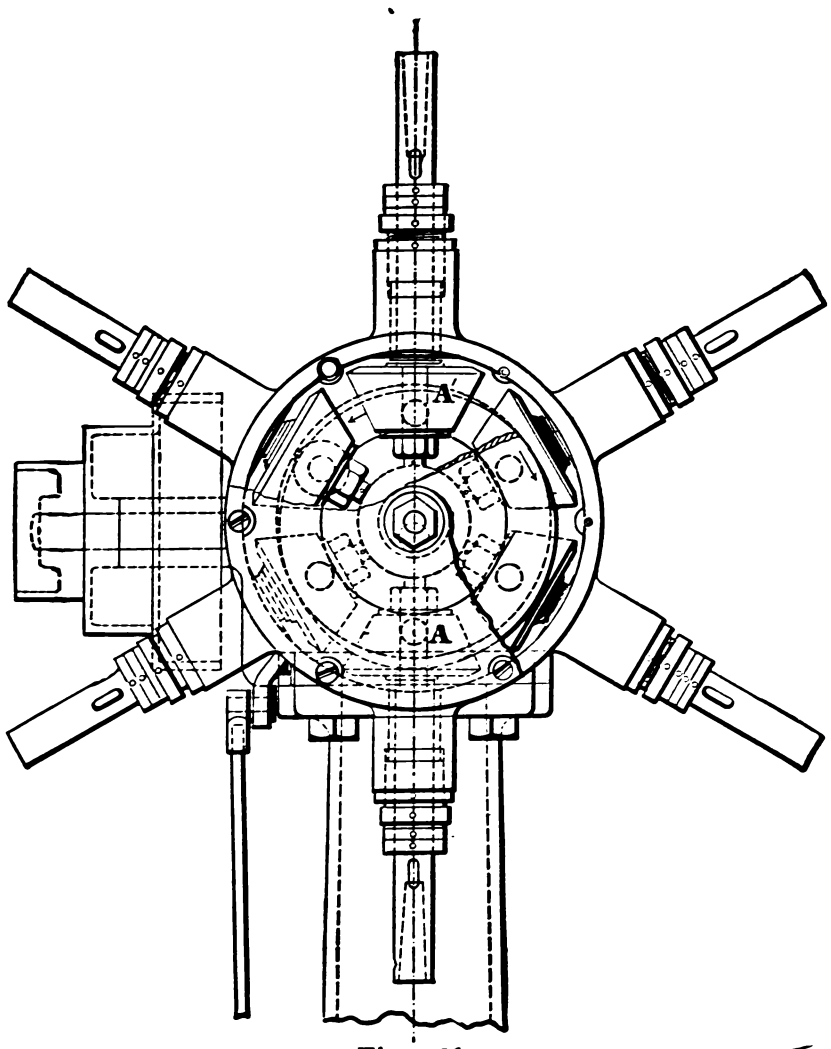

Fig. 1667.

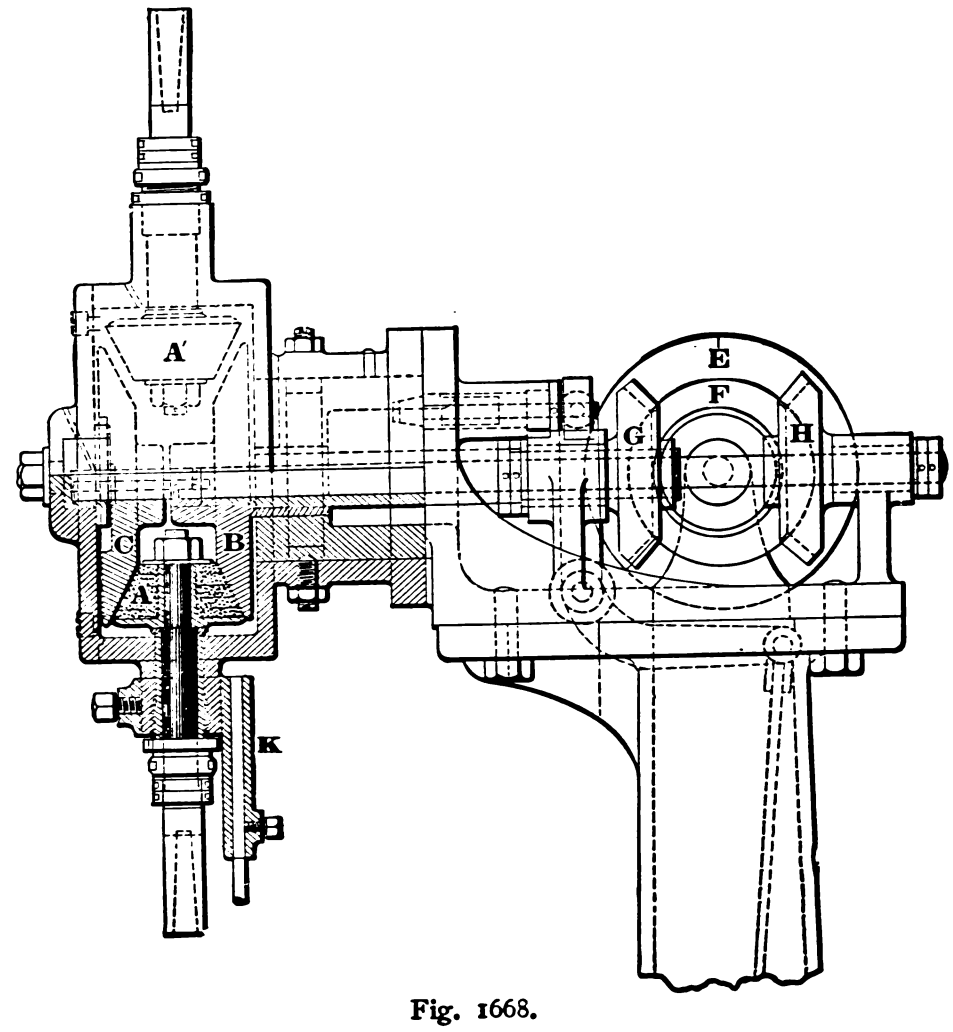

Fig. 1668.

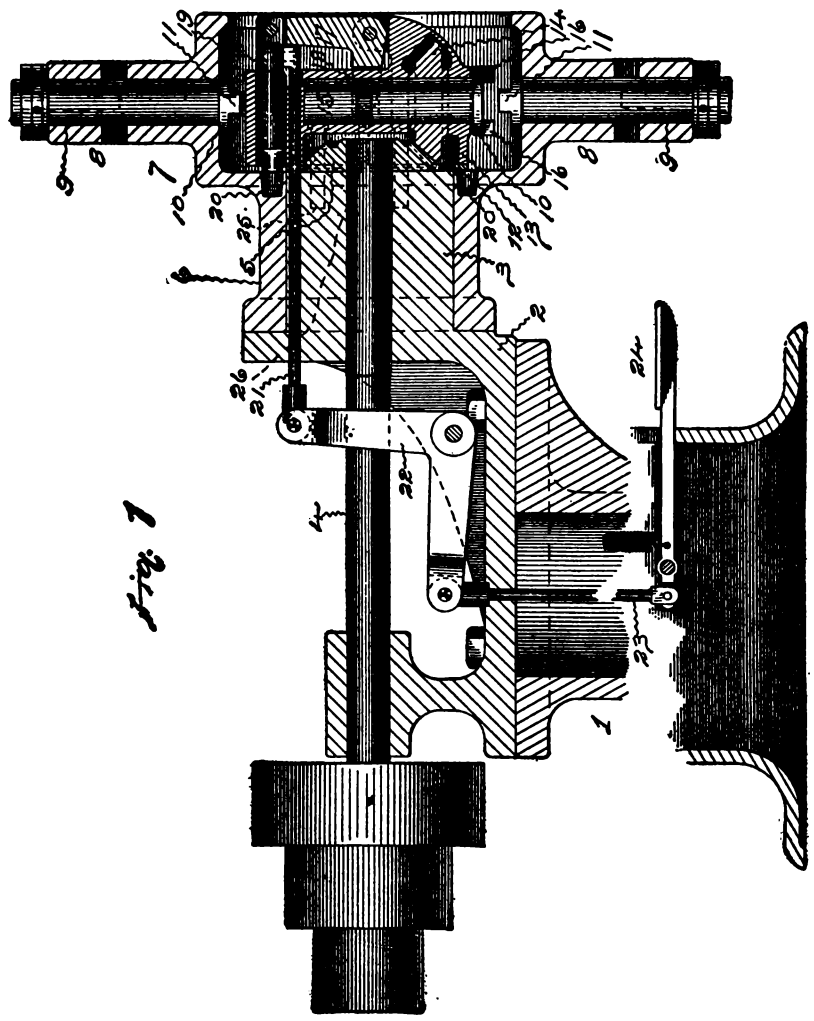

Fig. 1

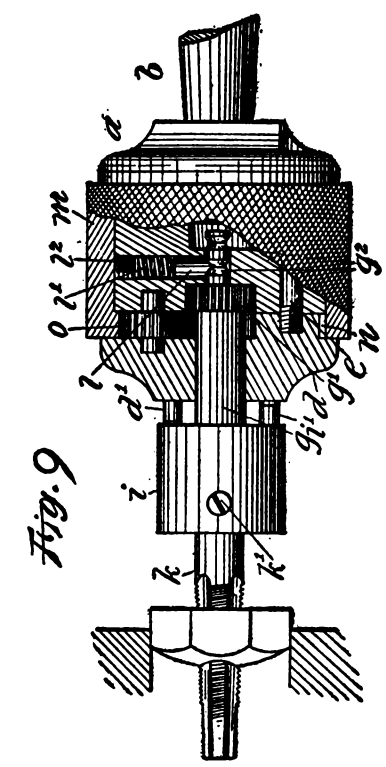

Fig. 9

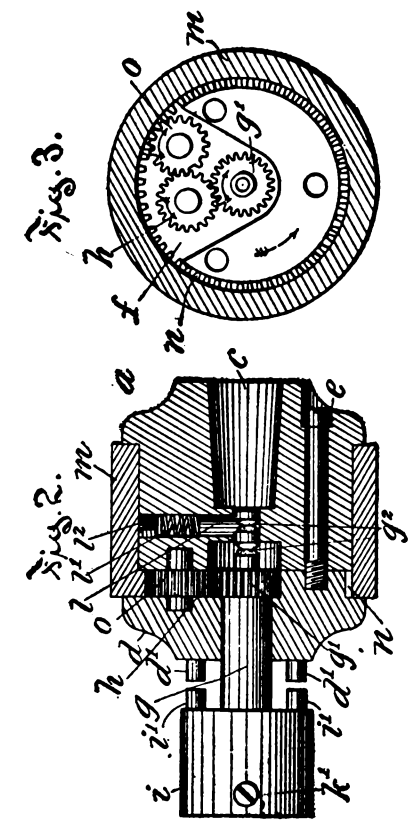

Fig. 3.

Fig. 2.

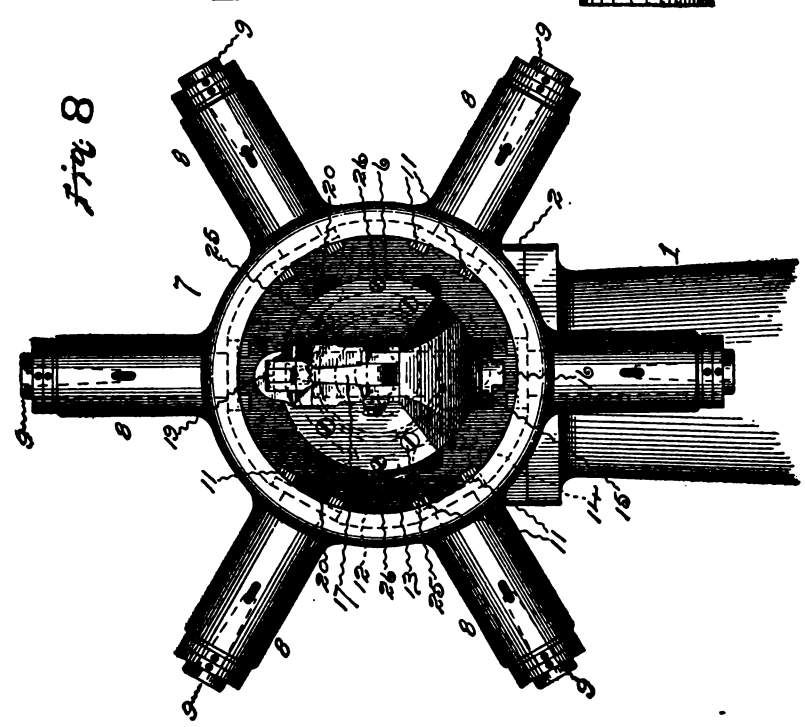

Fig. 8

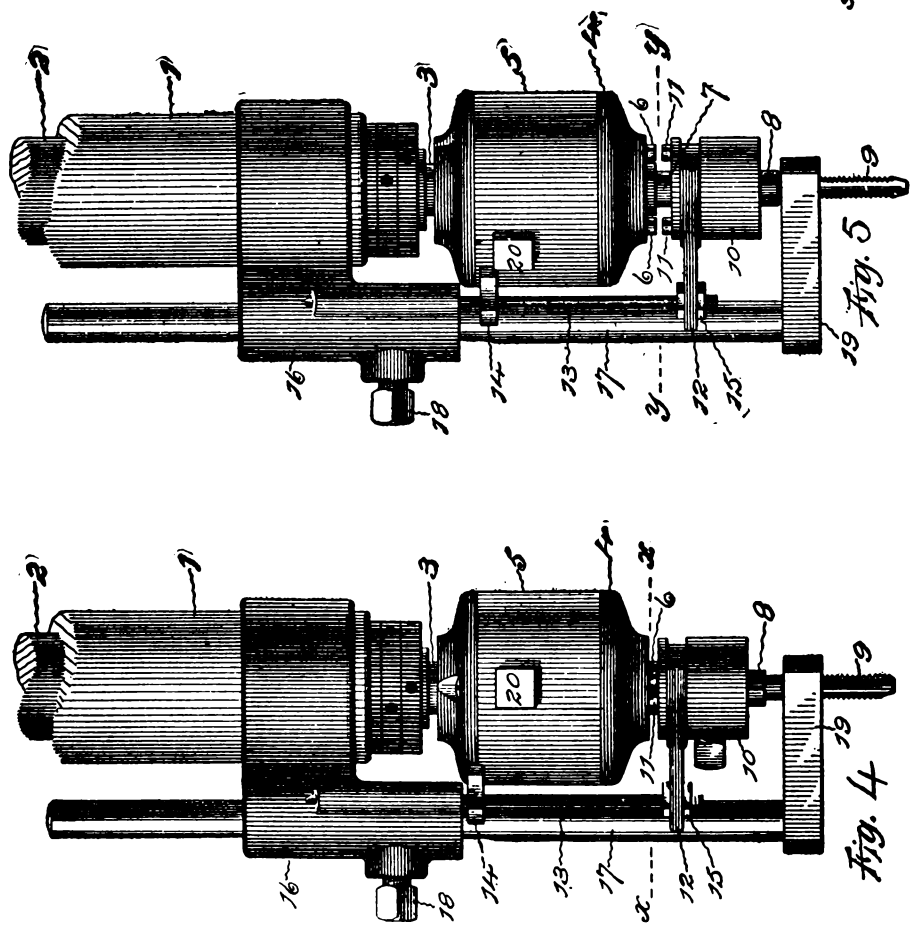

Fig. 5

Fig. 4

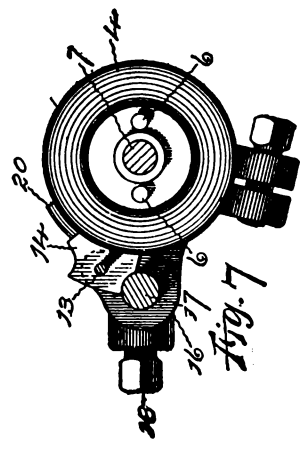

Fig. 7

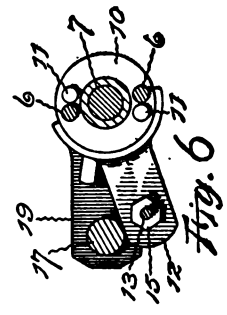

Fig. 6

ing bolt, and then, of course, the end of the bolt will pass into the socket and lock the turret head from further movement in the correct position. This backward movement of the locking bolt, which is caused by a spring attached to the treadle rod, oscillates the lever, 17, so that the driving spindle will descend and engage the end of the tool spindle that is in line with it. The upper arm of the lever, 17, is preferably made longer than the lower, or inner arm, so that when the bolt is moved to unlock the turret head, the shorter arm will lift the driving spindle and its clutch from the clutch on the end of the tool spindle before the head is unlocked, so that it cannot be turned until the clutches are disengaged; and when the bolt is unlocked, as the upper arm of this lever is the longer, the end of the bolt must be passed into one of the locking sockets, and thus secure the turret head from further movement, before the driving spindle clutch will engage a tool spindle clutch, insuring a perfect registering of the clutches before they are allowed to engage.

When in use, power is applied to the pulleys, and the shaft kept

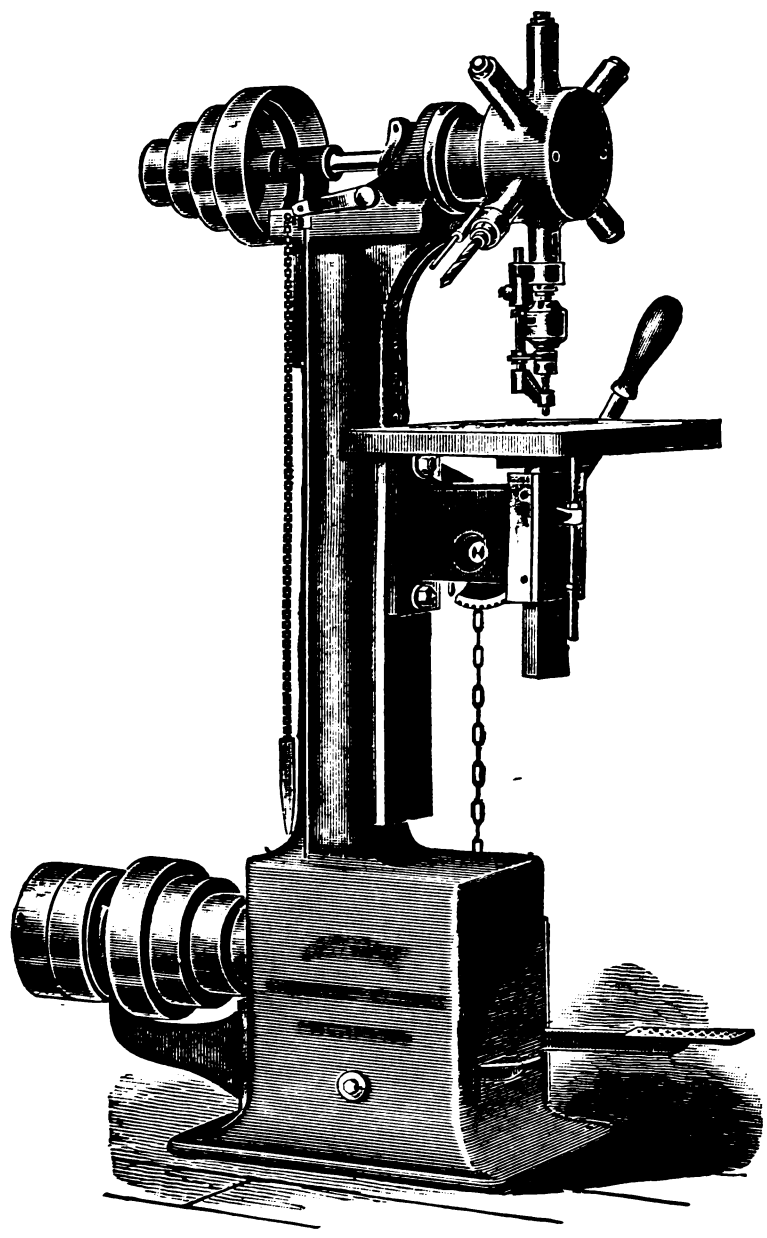

Fig. 1669.

in continuous rotation; and this, of course, continuously revolves both the bevel gears and the spindle that is splined to one of the gears in the driving head. When it is desired to change tools, the treadle is depressed, and this causes the lever in the head, as above described, to first release the revolving driving spindle clutch from the tool spindle clutch that has been driven, and then free the locking bolt from the locking socket at the same movement, leaving the turret head free to be rotated on the trunnion of the frame. When the proper tool comes in position for use the locking bolt passes into the locking and registering socket, with which it coincides, and first locks the head from future movement in correct position, and then the rapidly revolving driving clutch, the rotation of which has not been stopped, engages with, and revolves the clutch of, the spindle holding the tool to be used. This operation can be proceeded with as often and as rapidly as the operator desires, and any tool can be brought around for use by simply touching the treadle and turning the head; the operation of touching the treadle first releasing the driving spindle and then unlocking the head, which is again locked before the driving spindle engages with the spindle having the tool to be used.

An ingenious device is used in connection with this machine, by means of which holes may be tapped to a definite depth, and the direction of tap revolution reversed so as to automatically withdraw the tap from the work without stopping the machine or reversing the spindle motion.

Fig. 1670 is a sectional view of the device, which may be briefly described as follows: The device, as a whole, is driven by means of the taper hole P fitting to a socket in the machine in the ordinary way. G is the body of the machine, and H, a sleeve a working fit upon G, and provided with an internal gear F, in connection with which are three pinions, of which B is fast upon K; the central one is idle, and the other is in gear with the internal gear in H.

So long as the device revolves as a whole these gears remain at rest with relation to one another, but upon the downward feed of the lap being arrested they revolve the tap backwards and thus withdraw it from the work. The following description is extracted from McClary's original patent:

Referring to the drawings: Fig. 1, Plate XCI.–C, is a detail side view of the tap holder illustrating the manner of its use. Fig. 2 is a detail view in lengthwise central section of the tap holder. Fig. 3 is a detail view in cross section of the tap holder showing the reversing gears.

In the accompanying drawings the letter *a* denotes the body of the holder, which is preferably a cylindrical block of metal, as steel, having at one end means of attachment to a live spindle or arbor *b* of a lathe or other suitable machine tool, the socket *c* in the form of holder described serving as a direct means of attachment. A cap *d* is secured to the outer end of the holder, as by means of screw bolts *e*, and between this cap and the end of the body *a* there is a recess *f* in which the gear wheels of the reversing mechanism are located. A shaft *g* extends through a central hole in the cap and bears on its inner end a pinion g^1, that is adapted to be thrown into or out of engagement with a gear wheel *h* of the train of gears of the reversing mechanism. This spindle bears on its outer end a chuck or head *i* adapted to securely hold a tap *k* as by means of a binding screw k^1, which extends through a threaded socket in the head and binds upon the shank of the tap.

The main body of the holder, including the cap *d*, and the head *i*, is adapted to be connected by means of the clutch parts formed by the pins or shoulders i^1 extending from the rear end of one part and the pins or shoulders d^1 extending from the other part. These pins are made of such a length as to enable them to pass each other when the head is extended, as shown in Fig. 2 of the drawings, and permit a rotary movement of the body part without turning the head also.

The inner end of the shaft *g* is reduced in diameter and has the grooves g^2 adapted to be engaged by the pointed end of a spring catch *l*. This spring catch is located in a socket in the body *a* of the holder and is thrust inward as by means of a spring l^1, the outer end of the socket opening being closed as by means of a short screw l^2. When the shaft *g* is at the inner limit of its play, as shown in Fig. 1 of the drawings, the rotary movement of the spindle *b* turns with it the holder, and the pins or shoulders striking corresponding pins on the head turn that also in the same direction of movement. This direction of movement is such as to cause the tap *k* to be advanced into a nut held in a suitable chuck and to cut a thread therein. After the thread has been cut it is desirable to remove the tap, and this is accomplished by drawing back the spindle *b* and with it the body of the holder until the parts have assumed the relative position illustrated in Fig. 2 of the drawings.

On the body part there is supported a loose sleeve *m* having an internal gear *n* which is in engagement with a gear wheel *o*, of the train of gears of the reversing mechanism. This sleeve is preferably knurled on the outer surface, or it may be provided with means which will enable it to be easily held either by the hand or by means of any special tool. The spindle *b* is supposed

to be driven constantly in one direction, and it is the object of the invention to provide a simple and compact tool which may be secured to the end of such a live spindle so as to remove the necessity of providing any reversing mechanism for the spindle of the machine tool. The spindle, as *b*, being driven in one direction carries with it the holder *a* and the sleeve *m*, but when the latter is held, as by grasping it with the hand or as by means of any suitable tool or device, this rotary movement is stopped, and the body *a* continuing its revolution will drive the gear wheel in the opposite direction, as indicated by the arrow in Fig. 3 of the drawings. Through the medium of the idler *h* of this train of gears a motion in a reverse direction is imparted to the pinion g^1 and to the shaft *g* on which the tool holding head *i* is secured or of which it forms a part. The result of this rotary movement of the head will be to withdraw the tap from the thread in the nut or other like part in which a thread has been cut. A longitudinal reverse movement of the spindle *b*, or like part, is effected by the usual appliances on either a screw-cutting machine, speed lathe, drill press, or like machine tool in which the tool holder is usable. In the further operation of the device another thread may be cut

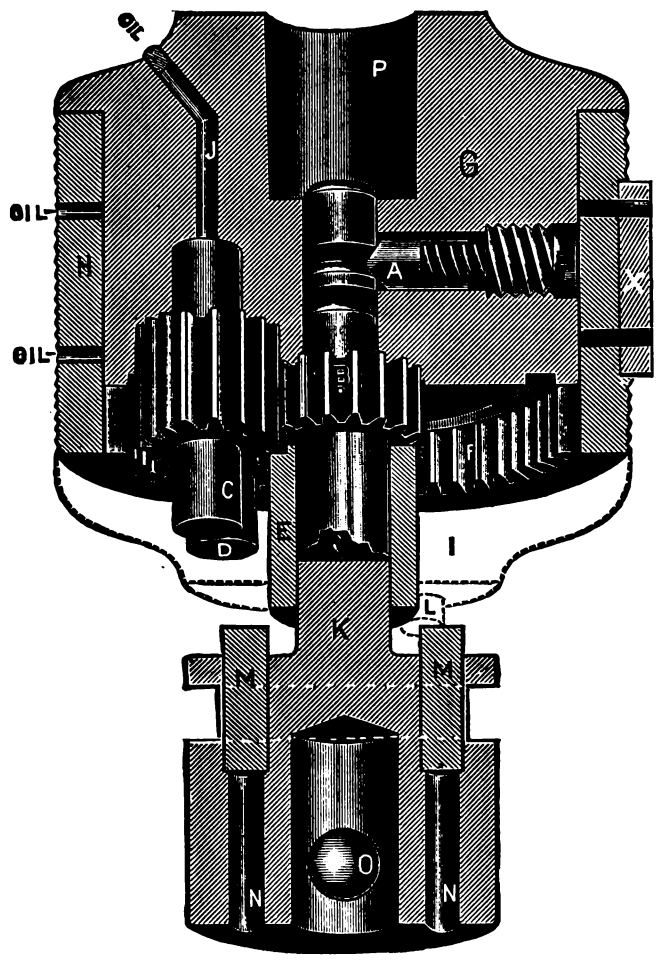

Fig. 1670.

by giving a forward movement to the tool, and when the tap encounters the work the two parts of the holder will be closed toward each other so as to cause the shoulders or pins i^1 d^1 to be again thrown into engagement, the catch *l* holding the head in the inward position until a positive force in the line of the axis of the holder is exerted to give a lengthwise outward movement to the shaft *g* and disengage the shoulders.

The exterior of the device and its operation are now clearly shown in the drawings from A. D. Quint's patent, in Plate XCI.–C, the description being as follows:

Referring to the accompanying drawings, Plate XCI.–C, Fig. 4 is a side view of the mechanism arranged as applied to the head and spindle of a vertical drill, showing the relative position occupied by the parts when a hole is being tapped. Fig. 5 is a similar view, with the parts shown in the position occupied when the tap is running in a reverse direction to unscrew from a perforation which has been threaded. Fig. 6 is a sectional view taken on the plane indicated by the broken line *x x* of Fig. 4 looking downward, and Fig. 7 is a sectional view taken on the plane *y y* of Fig. 5 looking upward.

In the views, 1 indicates a section of a headstock of a lathe or the sleeve of a drill press or other stationary part of a drilling machine in which the ordinary live spindle 2 of such a machine is rotarily supported. In these views, the sleeve is shown standing vertically, as if broken from a part of a drill press, but it can, of course, be arranged horizontally as well as vertically.

In the usual opening in the end of the live spindle 2 is thrust and held in a common manner the tapering shank 3 of a reversing tap holder.

The reversing tap holder illustrated is of a common form and can be obtained in the market. It has a head 4 with a loose sleeve 5 and the projecting clutch pins 6 and the interior gears, as shown in United States Letters Patent No. 531,382, dated December 25, 1894.

The head supports the shaft 7 that bears the tool holder or chuck 8, which, in the drawings, is holding an ordinary tap 9. This shaft 7 is illustrated as provided with a collar 10 with projecting clutch pins 11 adapted to make contact with the pins 6 projecting from the head. The shaft is arranged to move a limited distance longitudinally into and out of the head, and when moved into the head the pins 6 and the pins 11 engage as shown in Fig. 4. When in this position, the shaft, head, and sleeve will rotate as one part, the spindle rotating the head, and the head, through the clutch pins, rotating the shaft with the tool holders, so that the tool will rotate in the same direction as the live spindle. With the shaft drawn out from the head the pins are disengaged, as shown in Fig. 5, and then, when the sleeve 5 is held against movement, the shaft is, through the action of the intermediate gears, arranged in the interior of the head as in the common form of reversing tap holder referred to and shown in said patent, given a movement in a direction opposite to the direction of the live spindle of the head, so that while the spindle continues to rotate in the same direction the tool will be rotated in the reverse direction.

Connected with the collar 10, that is borne by the moving shaft 7, is a bar 12. The bar preferably has one end forked and is so located that the ends of the fork loosely engage a groove in the collar. With this connection when the collar is moved longitudinally the bar is moved with it, but the bar, which does not rotate, will not interfere with the free rotation of the collar.

Connected with the bar 12 is a rod 13, that bears a block or dog 14. Nuts 15 are preferably used to secure the rod to the bar, so that the rod may be adjusted lengthwise to regulate the distance between the bar that engages the collar on the tool holding shaft and the dog which is held by the rod. One end of the rod is loosely supported in a perforation in an arm 16, that is clamped to the sleeve 1 or other stationary part of the machine. In a perforation in this arm 16 is supported a post 17, which post is held in position by a set screw 18, which can be loosened for permitting of an adjustment of the post and then set for clamping the post in that position. On the end of the post is a trip or foot 19, that is arranged to project into the path of the stock being operated upon. Preferably this foot is perforated and the tool is passed through the perforation, as shown in the views.

On the sleeve 5 is a block or stud 20. This block is located so that when the dog is in one position the block will revolve with the sleeve freely; but when the dog is in another position the block will engage the dog, so that the block and sleeve cannot revolve. With the tool holding shaft thrust into the head and the clutch pins on the head and collar on the shaft in engagement, so that the spindle, head, sleeve, and tool holding shaft with the tool all rotate in one direction, as shown in Fig. 4, the dog 14 is in such a position that the block 20 during revolution passes free from the dog. When the tool holding shaft is drawn out of the head and the clutch pins are disengaged, as shown in Fig. 5, the collar on the tool holding shaft is drawn away from the head, and this draws the dog on the rod connected with the collar into the path of the block on the sleeve, so that the block makes contact and is held against rotation by the dog.

As above described, with the sleeve held against rotation, as it will be with the block engaging the dog and the clutch pins disen-

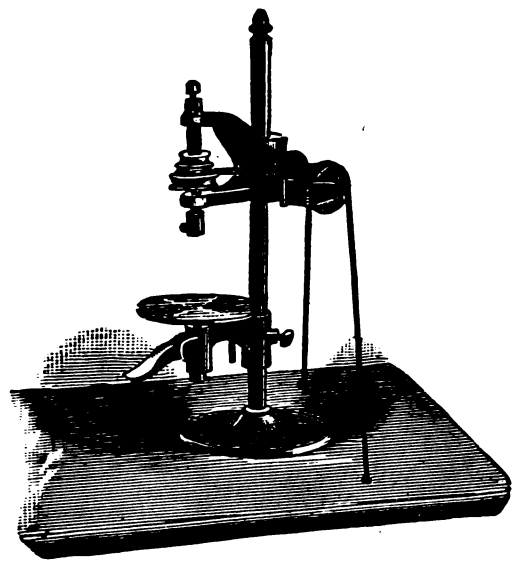

Fig. 1671.

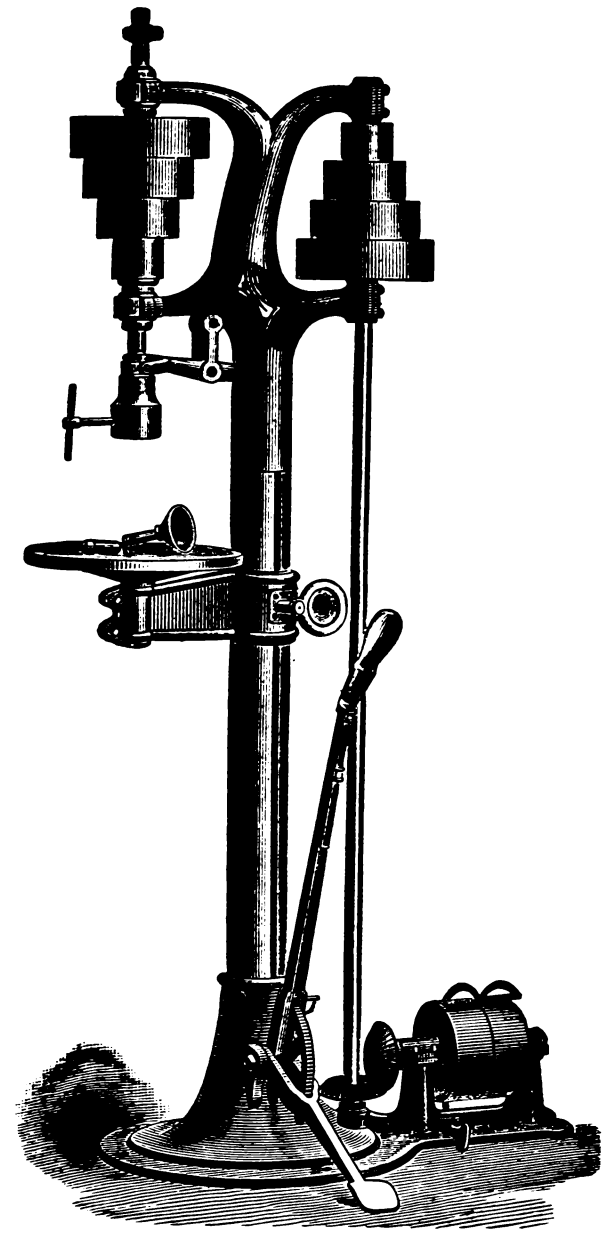

Fig. 1672.

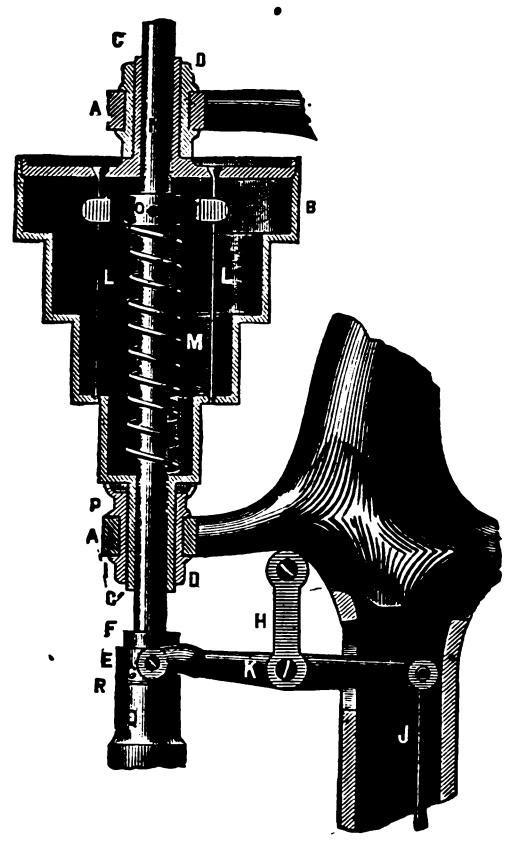

Fig. 1673.

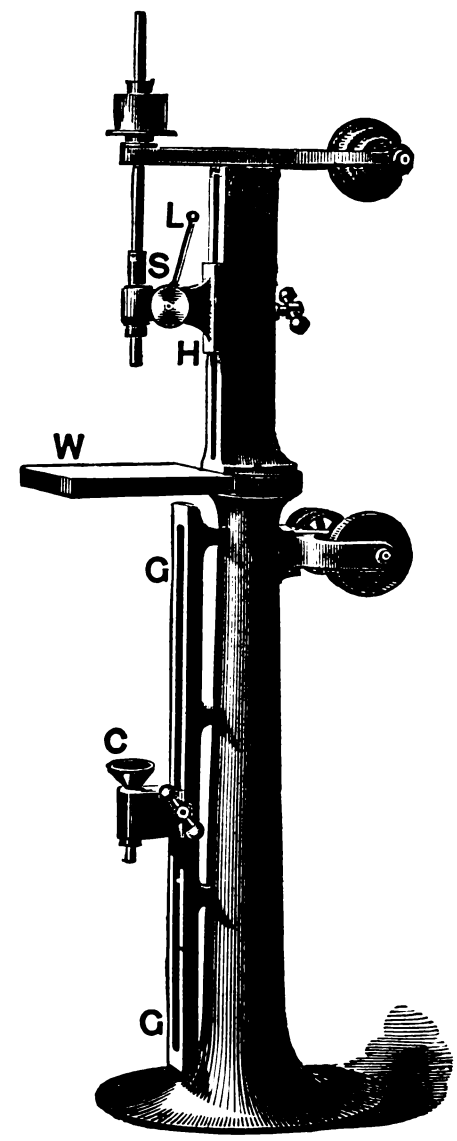

Fig. 1675.

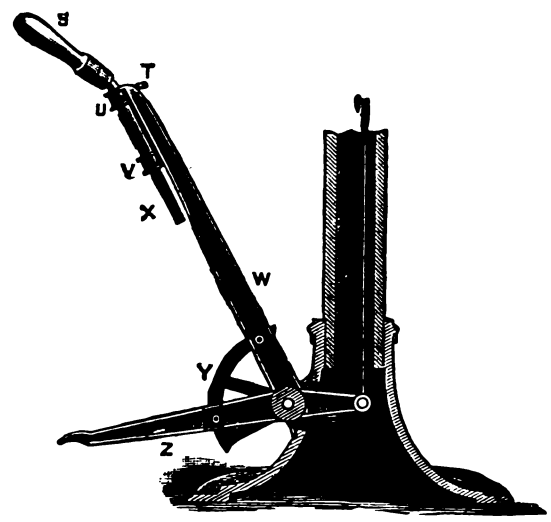

Fig 1674.

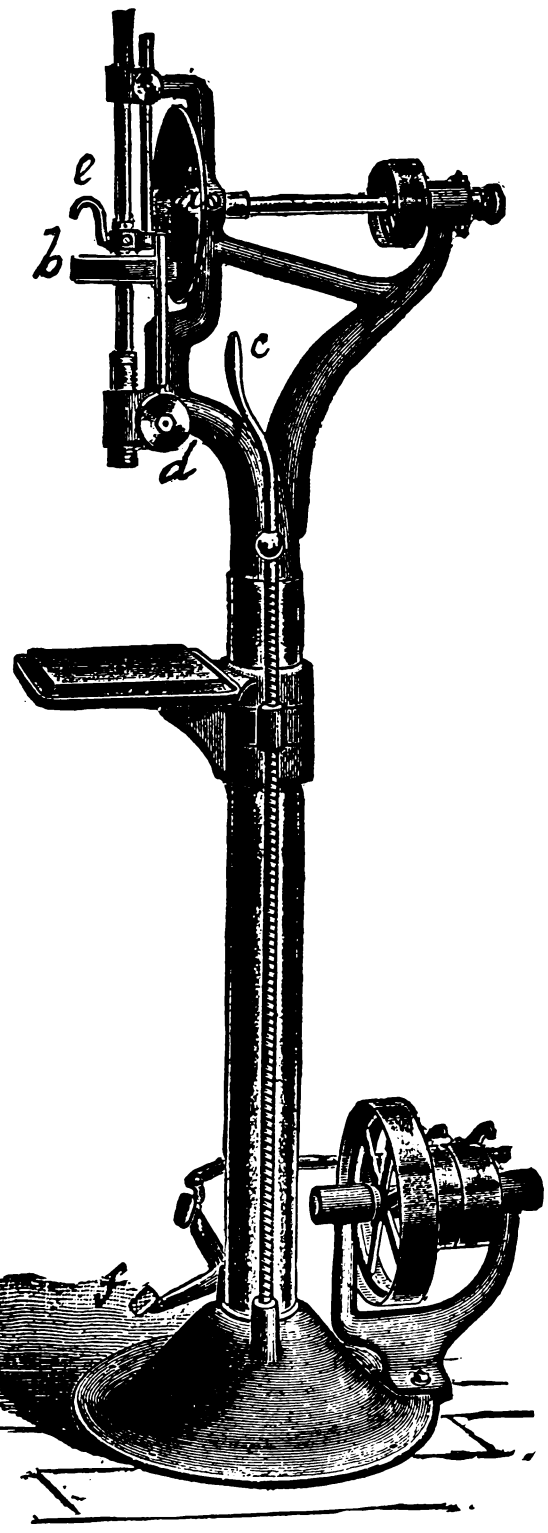

Fig. 1.

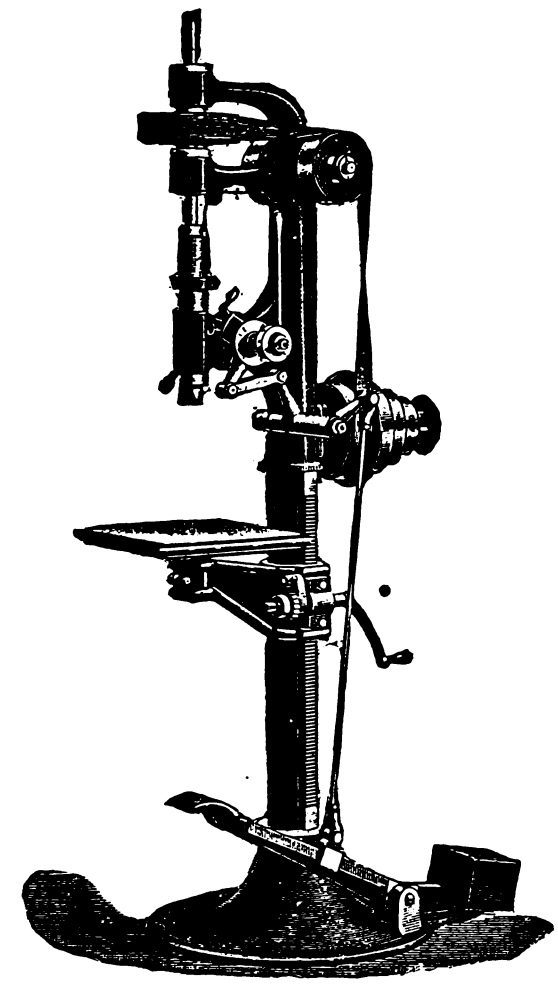

Fig. 2.

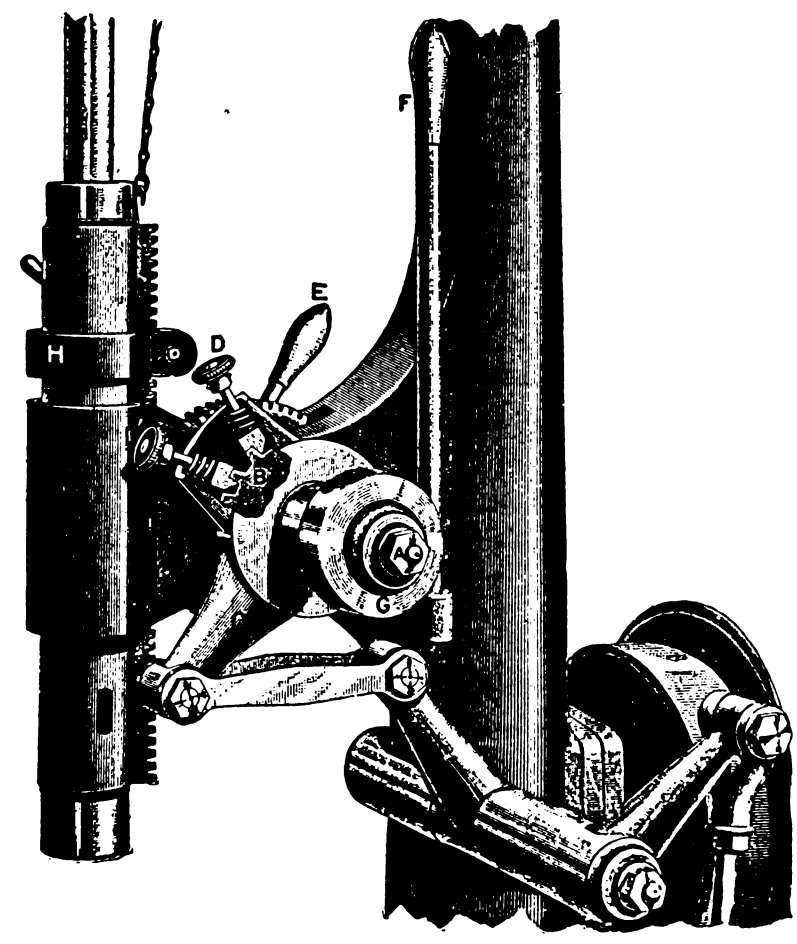

Fig. 3.

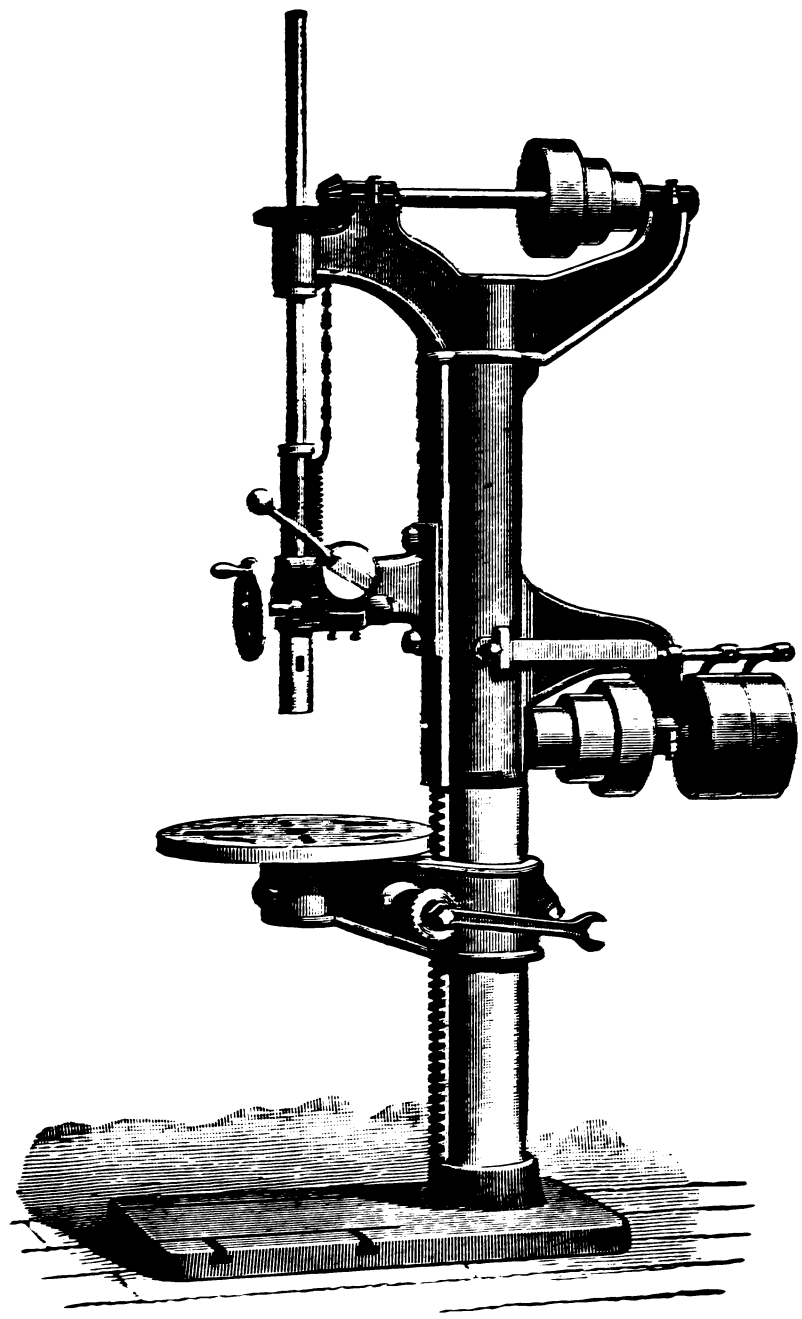

Fig. 1.

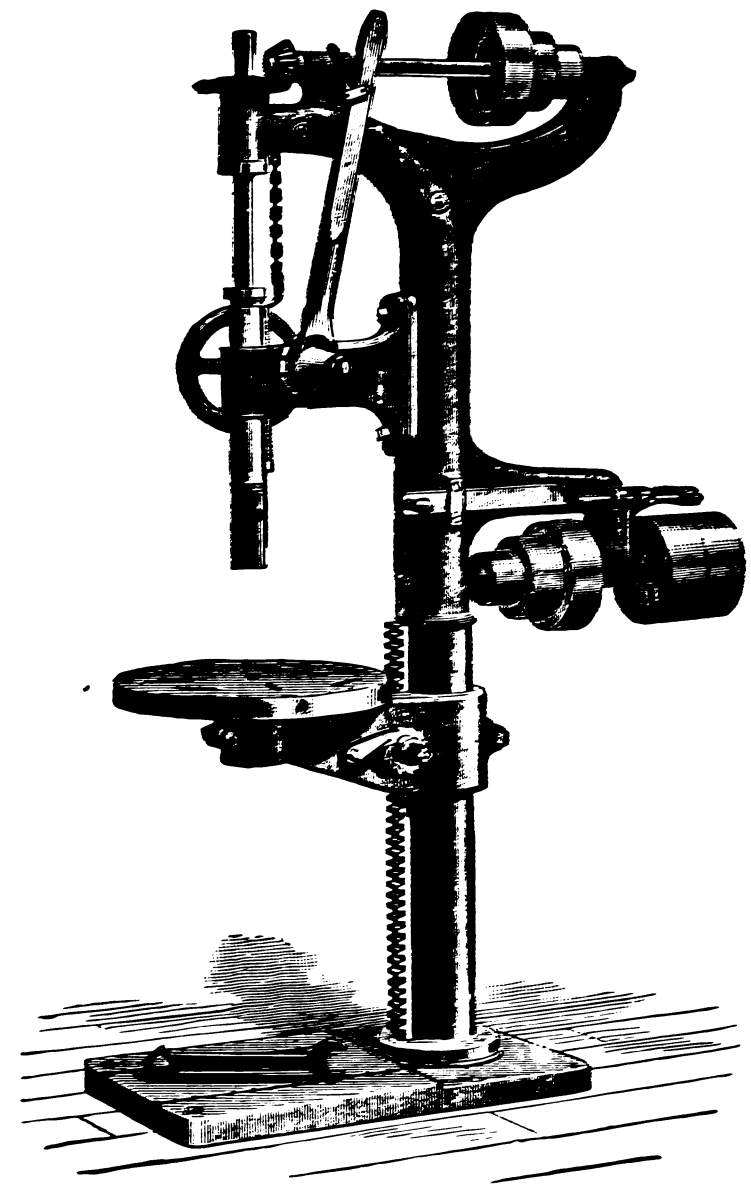

Fig. 2.

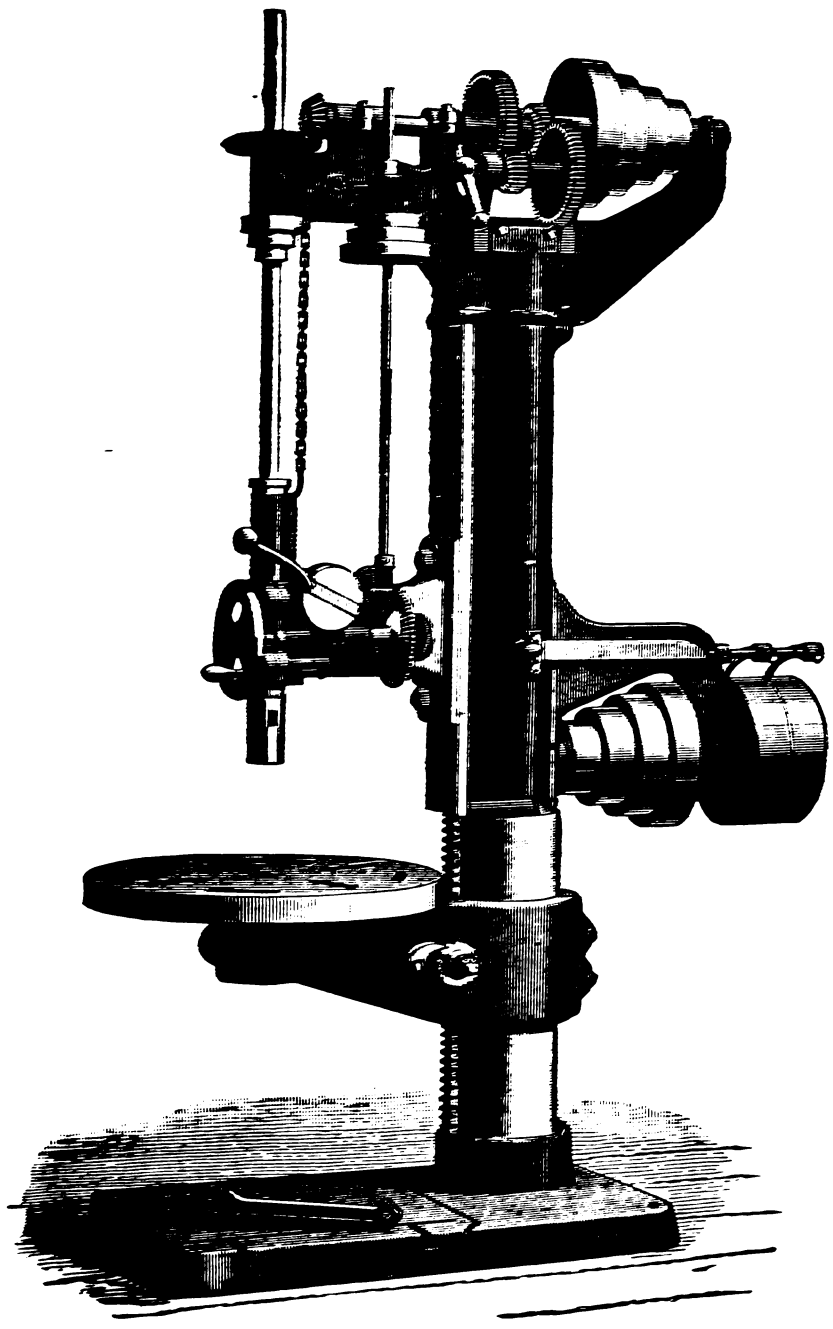

Fig. 3.

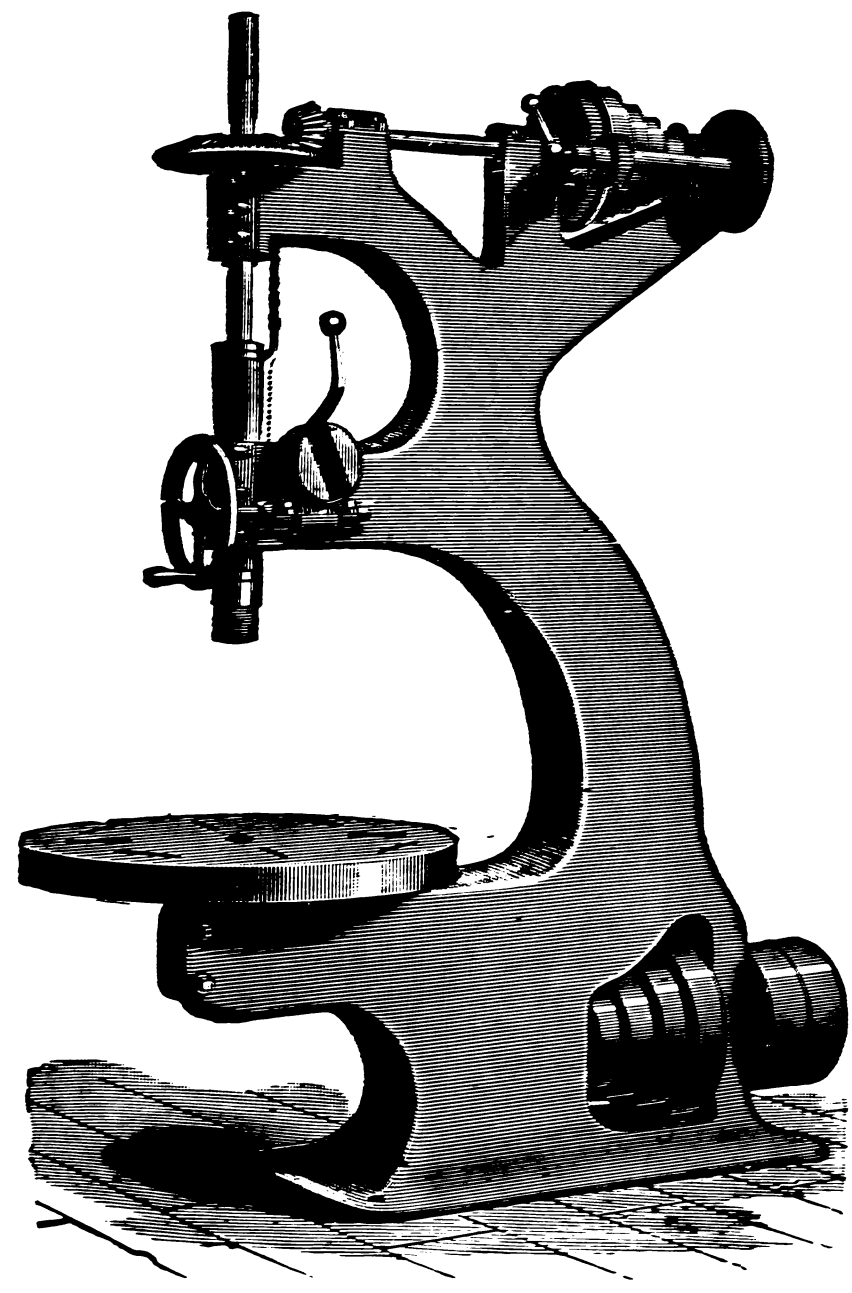

Fig. 4.

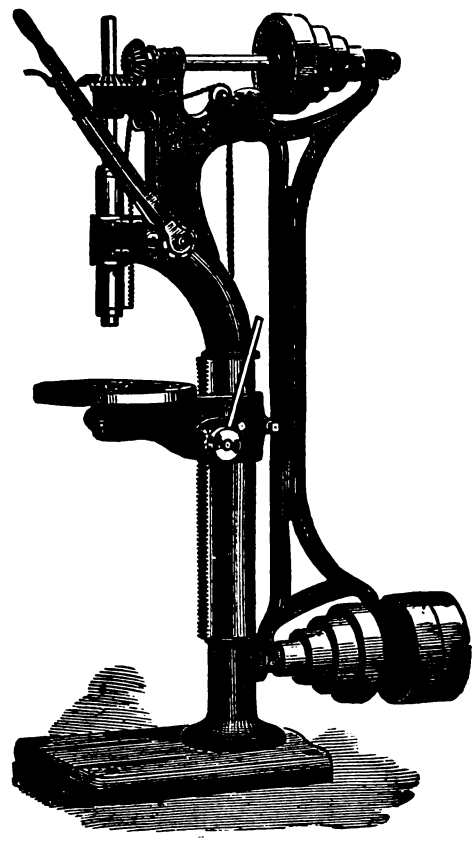

Fig. 1676.

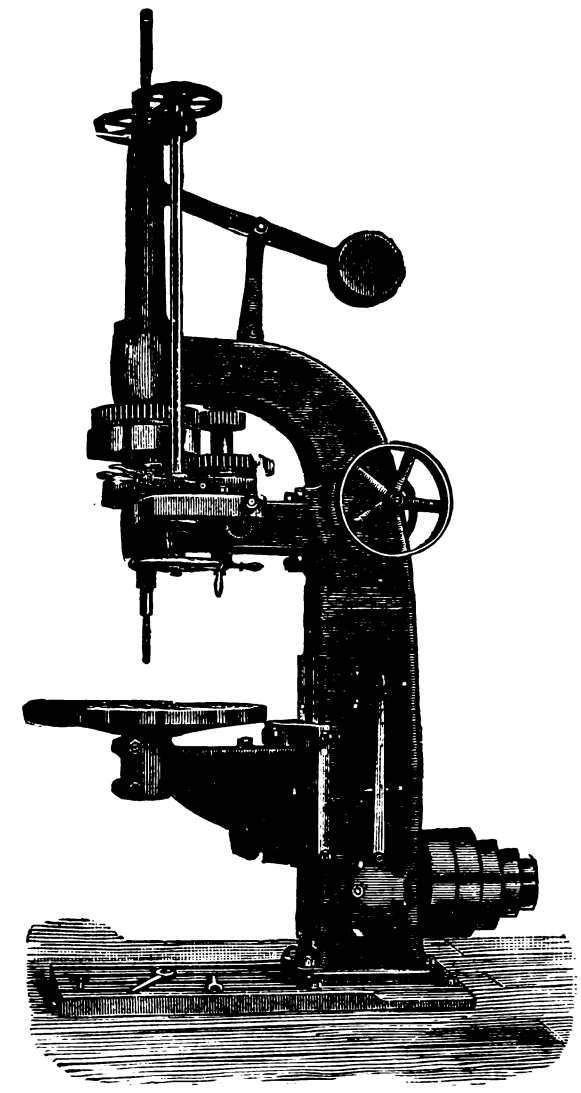

Fig. 1678.

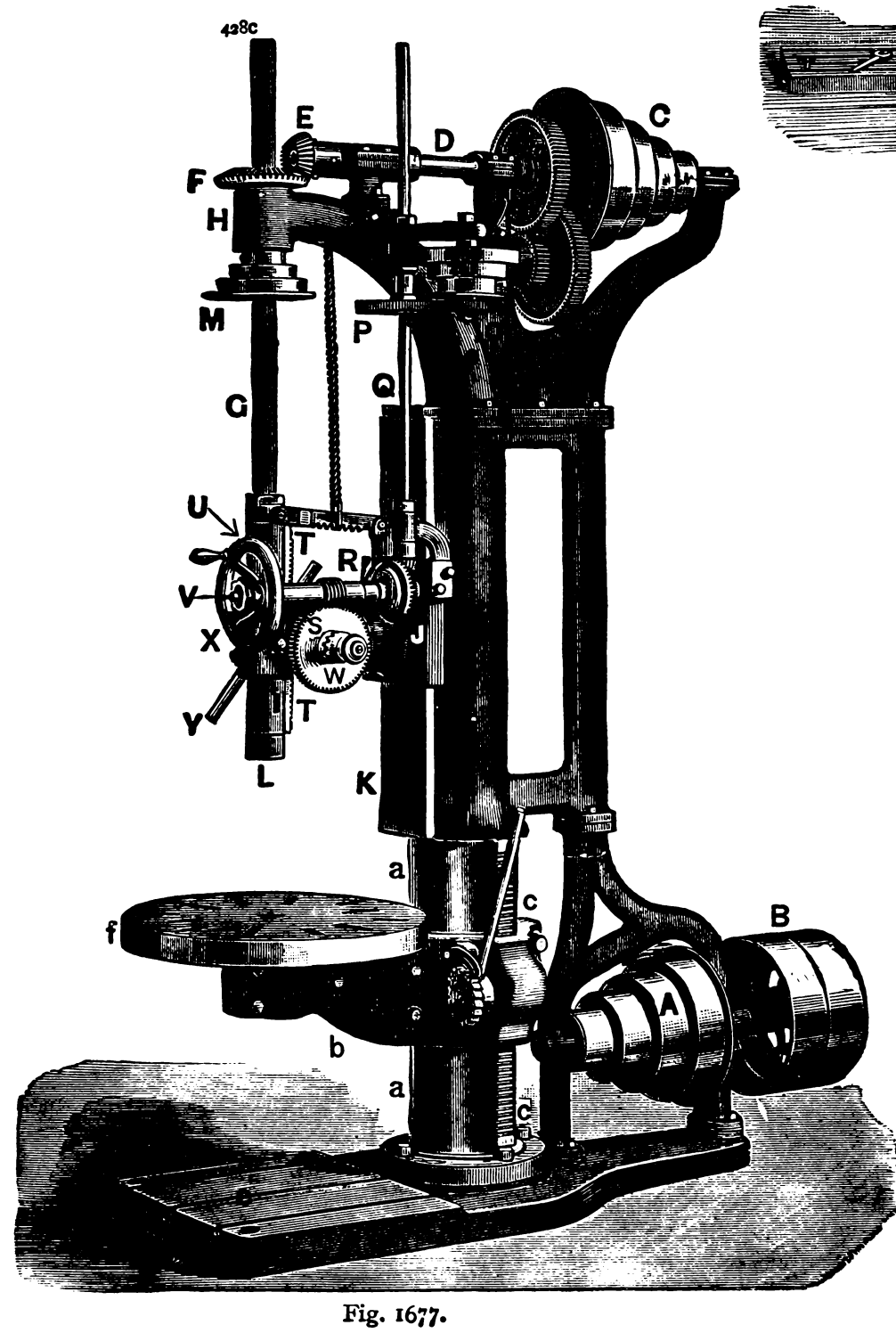

Fig. 1677.

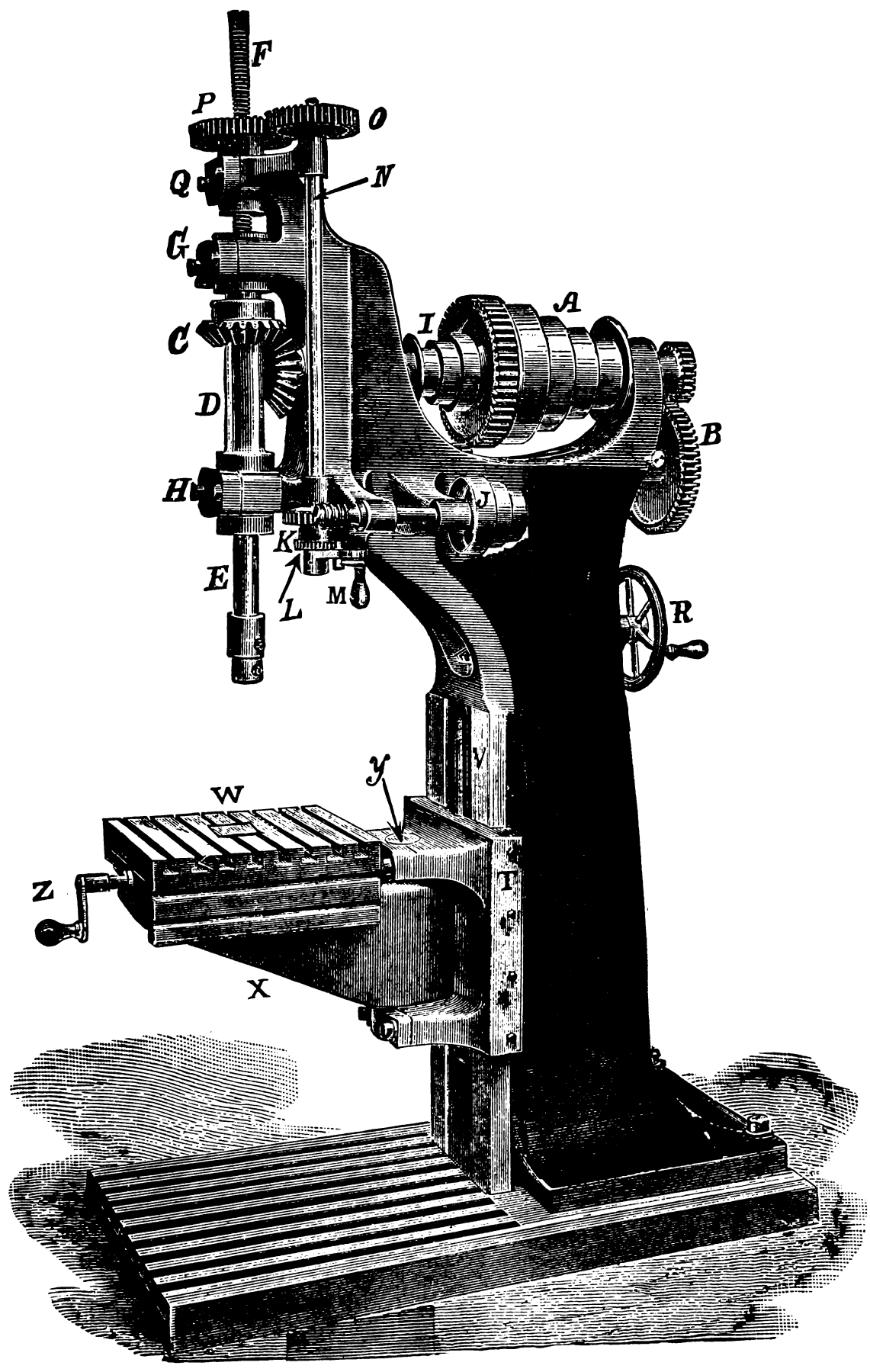

Fig. 1679.

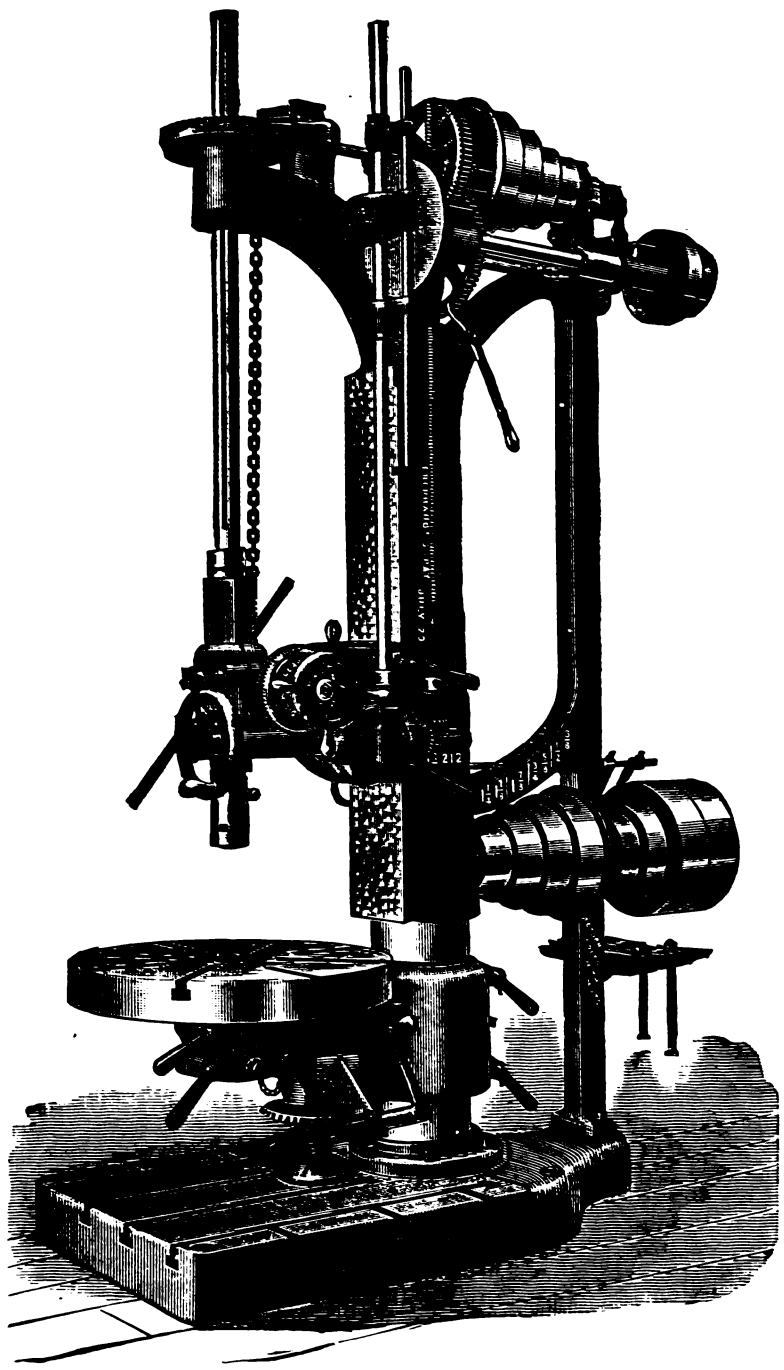

Fig. 1.

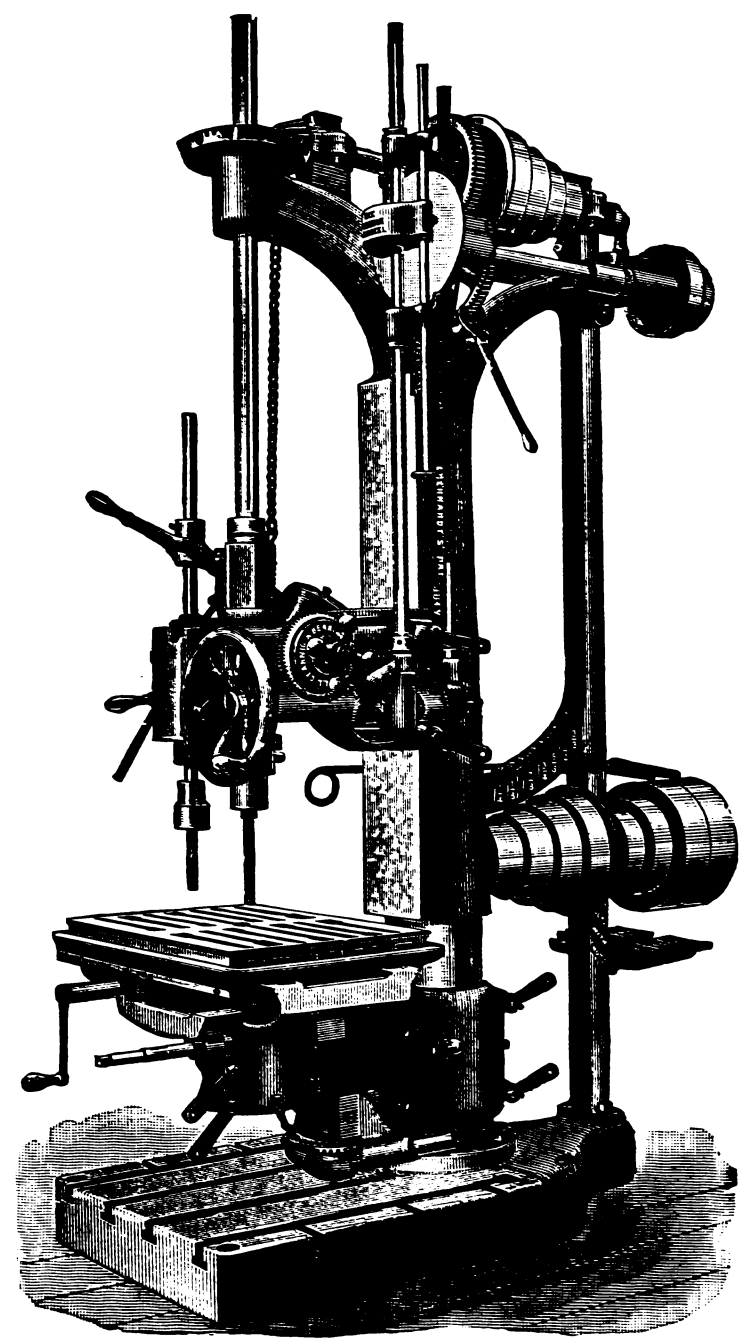

Fig. 2.

gaged, the tool holding shaft will be rotated in an opposite direction from the rotation of the head. Thus the spindle will continue to rotate in the same direction while the direction of rotation of the tool will be reversed.

When a tap or other tool is started into a piece of work, the pressure on the end of the tool, whether the tool is fed to the work or the work fed to the tool, forces the tool holding shaft into the head, so that the clutch pins engage, as shown in Fig. 4, and the tap rotates forward with the live spindle of the machine. When the tap has fed into the work the proper predetermined distance, according to the adjustment of the foot or trip, and the face of the work makes contact with the trip, the continued rotation of the tap, as the work cannot feed further on the tap on account of the trip, causes the holding shaft to be drawn out of the head and the clutch pins disengaged, which, as previously described, also draws the dog into the path of the block on the sleeve, so that the sleeve will be held against rotation, and then the tap immediately begins to rotate in a reverse direction through the mechanism referred to and turns itself out of the work. The dog rod is so attached to the bar connected with the tool holding shaft collar that the distance between the collar and the dog can be readily and nicely adjusted, insuring that the dog engages the block on the sleeve at the proper time, and the trip is readily adjusted, so that the depth of entrance of the tap into the work can be accurately regulated.

In using small drills in a machine it is of the first importance that the amount of pressure necessary to feed the drill be plainly perceptible at the hand lever or other device for feeding the drill or the work, as the case may be, as any undue pressure causes the drills to break. To attain sensitiveness in this respect the parts must be light and easy both to move and to operate.

Fig. 1671 represents the American Tool Company's delicate drilling machine for holes of $\frac{1}{4}$ inch and less in diameter. It consists of a head fixed upon a cylindrical column and affording journal bearing to the drill-driving spindle, which is driven by belt. The table on which the work is placed is carried by a knee that may be fixed at any required height upon the same round column. The knee and table may be swung out of the way, the column serving as a pivot. The table has journal bearing in the knee, and is fed upwards by the small lever shown.

Fig. 1672 represents Elliott's drilling machine for drills from $\frac{1}{32}$ inch to $\frac{3}{4}$ inch in diameter. The work table may be revolved in the arm that carries it, and this arm may be swung round the column or post. It is operated upwards for the feed by the hand lever shown. The conical chuck shown lying on the work table fits into the hole that is central in the table, and is used to receive the end of cylindrical work and hold it true while the upper end is operated upon.

The construction of the live spindle, and its cone, are shown in Fig. 1673. The drill chuck Q is attached to and driven by a one-inch steel spindle 19 inches long, which is accurately fitted through the sleeve bearings, within which it is free to move up and down, but is made to revolve with the cone by means of the connection O, one end of which slides upon the rods L. The drill is held up by means of the spiral spring M acting from the bottom of cone to the collar O. The weight of cone and spindle is carried upon a raw-hide washer, beneath which is the cupped brass P which retains the oil. The thrust of the feed lever G is also taken by a raw-hide washer R.

The machine is provided with a hand and a foot feed by means of the compound lever W Z, Fig. 1674, actuating the feed rod J, which passes up within the column and connects to the lever K, the latter being suspended by a link H.

Fig. 1675 represents Slate's sensitive drilling machine, in which the lower bearing for the live spindle is carried in a head H that fits to a slide on the vertical face of the frame, so that it may be adjusted for height from the work table W to suit the height of the work. L is a lever operating a pinion engaging a rack on the sleeve S to feed the spindle. The table W swings out of the way, and a conically recessed cup chuck C is carried in a bracket fitting into a guideway in the vertical bed G. The cone of the cup chuck is central to or axially in line with the live spindle, hence cylindrical work may have its end rested in the cone of the cup chuck, and thus be held axially true with the live spindle.

A sensitive drill having a friction disk for varying the speed of the drill is shown in Fig. 1 (Plate XCIII.), which illustrates Barnes's machine. At *a* is a friction disk driving the roller or friction roll *b* on the drill spindle, while moving *e* horizontally relieves *b* from contact with *a*. It is obvious that the farther out from the centre of the disk *a* the roller *b* is placed, the faster the drill spindle will be revolved, while by operating *e* the roll *b* can be set higher or lower upon *a* to regulate the drill speed while the machine is running. A hand feed is provided at *d*, and at *f* is the belt shifter. At *c* is a lever or handle for the screw that raises or lowers the work table to suit the height of the work.

Figs. 2 and 3 (Plate XCIII.) represent a small drilling machine by Luscomb & Corey, in which there is obtained a foot feed by means of the treadle, or a lever feed by means of a lever inserted in the holes in G; or, for very light work, the quick return lever E may be used for feeding.

The ratchet B, which is firmly fixed on the shaft A, is completely covered by the case C. On one side of this case is an extension which contains two catches D and D'.

TO FEED BY THE FOOT LEVER.—For a hole deeper than can be drilled by one stroke of the lever, drop D' into the ratchet, and by simply raising the foot and allowing the lever to come up, additional depth equal to the first will be obtained, and so on to the full stroke of the spindle, it being only necessary to lift the drill out of the work by means of the quick return handle E to clear it as with any drill.

For short holes, the spindle may be made to move rigidly with the foot lever by throwing in both catches D and D', these engaging with the same ratchet, but in opposite directions, and so making the motion of the spindle coincide with that of the lever. With this arrangement the maximum up and down movement of the spindle is $3\frac{1}{2}$ inches. The connection on the foot lever is adjustable at any point, thus varying the power applied to suit the size drill being used and the work being done—a very valuable point.

The force and consequent quickness with which the drill may be brought out of the work without the use of the quick return can also be regulated by moving the weight on the back end of the foot lever shown in Fig. 1. This feature will be appreciated by persons having a large number of duplicate holes to drill.

TO FEED BY HAND.—Raise both the catches D and D' out of the ratchet and insert the lever E in any of the holes in the hub G.

Holes may be duplicated to any depth to $7\frac{3}{4}$ inches by means of the stop H, which may be adjusted to any point on the spindle sleeve.

Plate XCIV. represents drilling machines constructed by the Bickford Drill Company. Fig. 1 is a 20-inch drill with a sliding head for the drill spindle and having a wheel feed and a quick return motion for the drill; the spindle is counterbalanced. Fig. 2 represents a 20-inch lever drill, the lever being for feeding and the hand wheel for a quick adjustment of the spindle, which is counterbalanced. The table elevates or lowers by a rack and pinion, and swings around to any required position on the column.

Fig. 3 represents the 24-inch back geared and power feed drill, having a sliding head with a wheel feed and a quick return motion. The work table may be turned on its own axis or swung around with the knee that supports it.

A drill especially designed for boiler-makers' work is shown in Fig. 4. This machine has a hand wheel feed and a quick return motion for the drill. It is back geared and the spindle is counterbalanced.

Fig. 1676 represents a drilling machine in which the spindle has four changes of feed, and is fed by a lever handle operating a pinion that engages a rack placed at the back of a sleeve forming the lower journal bearing for the spindle. The lever is provided with a ratchet so that it may be maintained in a handy position for operating. The work table is raised or lowered by a pinion operating in a rack fast upon the face of the column, a pawl and ratchet wheel holding it in position when its height has been set. A lever is used to operate the pinion, being inserted in a hub fast upon the same spindle that carries the pinion and the ratchet wheel.

Fig. 1677 represents a drilling machine by Prentice Brothers, of Worcester, Massachusetts. Motion for the cone pulley A is received by pulleys B and is conveyed by belt to cone pulley C, which is provided with back gear, as shown ; the driving spindle D drives the bevel pinion E, which gears with the bevel-wheel F, which drives the drill spindle G by means of a feather fitting in a keyway or spline that runs along that spindle. Journal bearing is provided to the upper end of the spindle at H and to the lower end by bearings in the head J, which may be adjusted to stand at and be secured upon any part of the length of the slideway K. By this arrangement the spindle is guided as near as possible to the end L to which the drill is fixed and upon which the strain of the drilling primarily falls. This tends to steady the spindle and prevent the undue wear that occurs when the drill spindle feeds below or through the lower bearing.

The feed motions are obtained as follows :—

On the drill spindle is a feed cone M which is connected by belt to cone N, which drives a pinion O, that engages a gear P upon the feed spindle Q, which has at its lower end a bevel pinion, which drives a bevel gear upon the worm-shaft R. The worm shown on R drives the worm-wheel S, whose spindle has a pinion in gear with the rack T, which is on a sleeve U on the drill spindle G. It is obvious that when the rack T is operated by its pinion the sleeve U is moved endways, carrying the feed spindle with it and therefore feeding the drill to its cut, and that as the feed cone M has three steps there are three different rates of automatic feed.

To throw the self-feed into or out of action the following construction is employed :—

The worm-wheel S has on its hub face teeth after the manner of a clutch, and when these teeth are disengaged from the clutch sleeve W the worm-wheel S rides or revolves idly upon its shaft or spindle, which therefore remains at rest. Now the clutch sleeve S has a feather fitting to its spindle or shaft, so that the two must, if motion takes place, revolve together ; hence when W is pushed in so as to engage with S, then S drives W and the latter drives the spindle, whose pinion operates the rack T.

A powerful hand feed to the drill spindle is provided as follows :—

The worm-shaft R is hollow, and through it passes a rod having at one end the hand nut V and at the other a friction disk fitting to the bevel gear shown at the right-hand end of the worm-shaft. This friction disk is fast upon the worm-shaft and serves to lock the bevel gear to the worm-shaft when the nut V is screwed up, or to release it from that shaft when V is unscrewed.

Suppose, then, that V is unscrewed and shaft R will be unlocked from the bevel-wheel and may be operated by the hand wheel X, which is fast upon the worm-shaft, and, therefore, operates it and worm-wheel S, so that W being in gear with S the hand feed occurs when X is operated and V is released. But as the motion of S is, when operated by its worm, a very slow one, a second and quick hand feed or motion is given to the spindle G as follows, this being termed the quick return, as it is mainly useful in quickly removing the drill from a deep hole or bore.

The spindle carrying S and W projects through on the other side of the head J and has at its end the lever Y ; hence W being released from S, lever Y may be operated, thus operating the pinion that moves rack T, one revolution of Y giving one revolution to the pinion, both being on the same shaft or spindle.

The work is carried and adjusted in position beneath the drill as follows :—

The base of the column or frame is turned cylindrically true at *a*, and to it is fitted a knee *b*, which carries a rack *c*. The knee *b* affords journal bearing to a spindle which has a pinion gearing with the rack *c*, and at the end of this spindle is a ratchet-wheel *d*, operated by the lever shown. A catch may be engaged with or disengaged from ratchet *d*. When it is disengaged the lever may be operated, causing the pinion to operate on rack *c* and the knee *b* to raise or lower on *a* according to the direction in which the lever is operated. As the knee *b* carries the rack the knee may be swung entirely from beneath the drill spindle and the work be set upon the base plate *e* if necessary, or it may be set upon the work table *f*, which has journal bearing in the knee *b*, so that it may be revolved to bring the work in position beneath the drill.

In the Sellers drilling machine, Fig. 1678, the drill spindle when in single gear is driven by belt direct, producing a uniform and smooth motion that is found of great advantage in drilling the smaller sizes of holes. The back gear is arranged to drive the spindle direct without the power requiring to be transmitted through a shaft, which induces vibration. The drill spindle is provided with variable rates of self-acting feed, but may also be moved rapidly by hand, and is counterbalanced. The work table is capable of revolving upon its axis, and the arm on which it is carried is pivoted in a slide upon a vertical slideway on the front of the main frame, so that the table and the arm may be swung out of the way for work that can be more advantageously rested on the base plate of the machine. A central hole is bored in the table, being true to the drill spindle when the arm is in its mid position, and clamps are provided to secure the circular table against rotation when it is set to place, and also to secure the swinging bracket to any required position. This form of table, like the compound table, has the advantage of permitting all parts of the table being brought in turn under the drill, but the motion is not in right lines. Holes are provided in the circular table to admit holding-down bolts.

The rates of feed are proportioned to the kind of drilling to be done. When the back gear is not in use and small drills are to be driven, the range of feeds is through a finer series than when the back gear is being used, and large drills or boring bars are to be driven.

Fig. 1679 represents a drilling machine of English design. The cone pulley A is provided with back gear B placed beneath it, the live spindle driving the drill spindle through the bevel gears C, one of which is fast upon a sleeve D through which the drill spindle E passes. The feed motions are obtained as follows :—I is the feed cone driving cone J, which drives a worm and worm wheel at K. In one piece with the worm wheel is a ratchet wheel L, and at M is a handle with a pawl that may be engaged with or disengaged from ratchet wheel L. When it is engaged, the handle, which is fast upon the vertical feed spindle N, is revolved by the worm wheel and the automatic feed is put in operation ; but when the pawl is disengaged the worm and worm wheel revolve in the bearing while the spindle N remains at rest, unless it be operated by the handle M, which obviously revolves the spindle N more quickly than the worm and gives to a corresponding extent a quick motion to the drill spindle. Spindle N is provided with the gear wheel O, which drives gear P, which is threaded upon the feed screw F and has journal bearing at Q. The sleeve D has journal bearing at G and at H. At R is a hand wheel upon a horizontal shaft at whose other end is a bevel gear engaging with a bevel gear on the vertical screw for the knee T which fits to the vertical slides V. The work table W is fitted to a horizontal slide upon the arm X, which is pivoted to the knee T at Y, the handle for operating the screw of the table being at Z.

Fig. 1 (Plate XCVII.) represents an improved drilling machine or drill press, as these machines are sometimes called, by Messrs. Gould & Eberhardt.

The rates of feed are here governed by a friction disk, driving a friction roll that can be readily moved by hand from the periphery of the disk to its centre.

Fig. 2 shows the machine with a tapping attachment which consists of an extra spindle driven by a spur gear from the main spindle, which has a vertical movement, by counterbalanced lever and a double clutch for reversing the motion. Fig. 2 also has a *compound table*, which, in addition to the two slides at right angles to each other, can be swivelled completely around by worm gearing in the supporting arm, so that any desired movement of the table can be obtained, either for setting the work or for cutting operations, these machines being made with bearings and other features fitting them for milling or profiling operations where desired.

The most notable improvement in the machine, however, is found in the method adopted of giving vertical motion to the arm supporting the table. A large screw is placed forward of the main column, so that it comes about under the centre of the weight.

The screw rests in a plate or socket, which is on the bed plate,

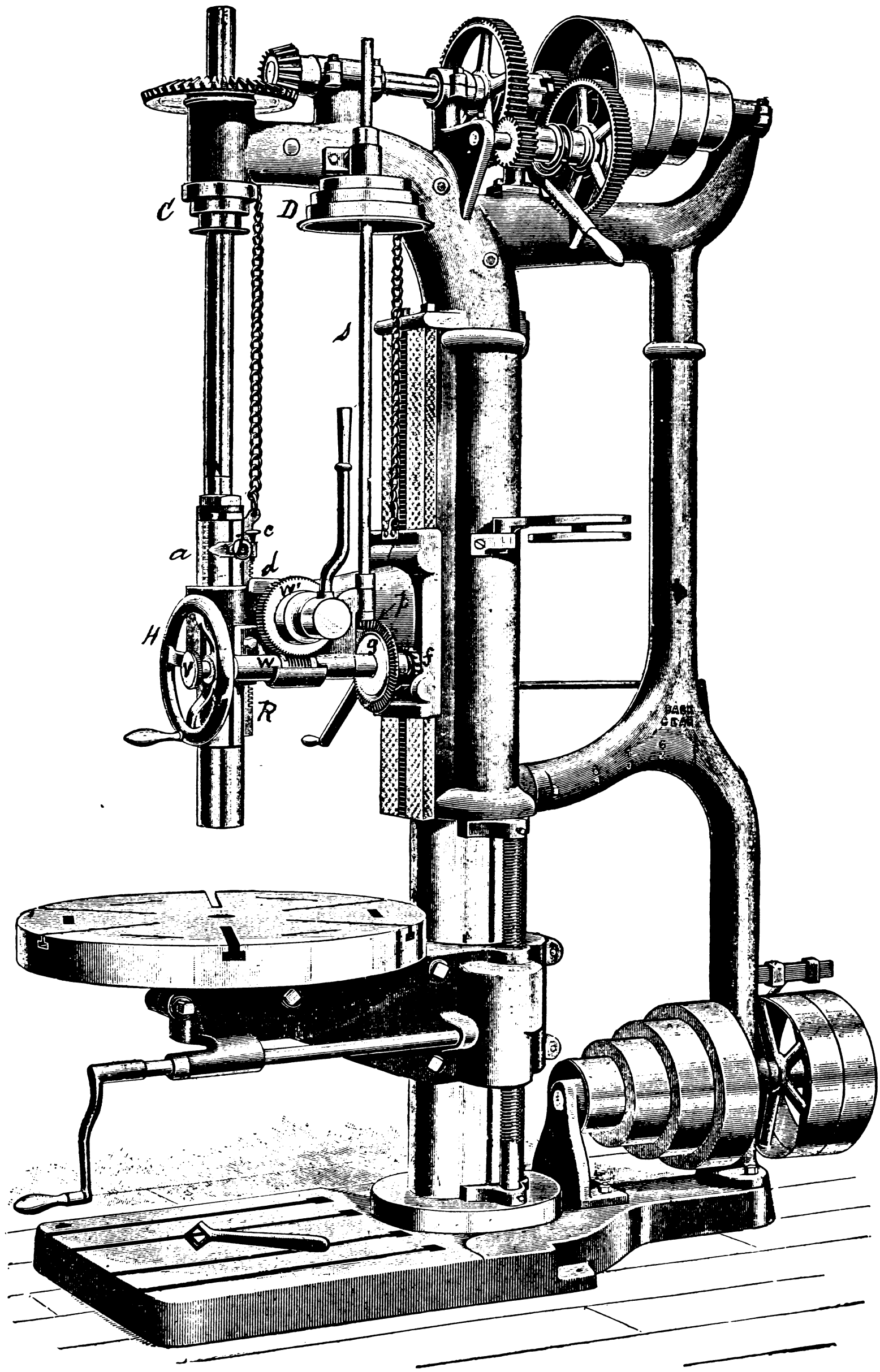
C
D
s
c
a
d
w'
H
v
w
g
f
R

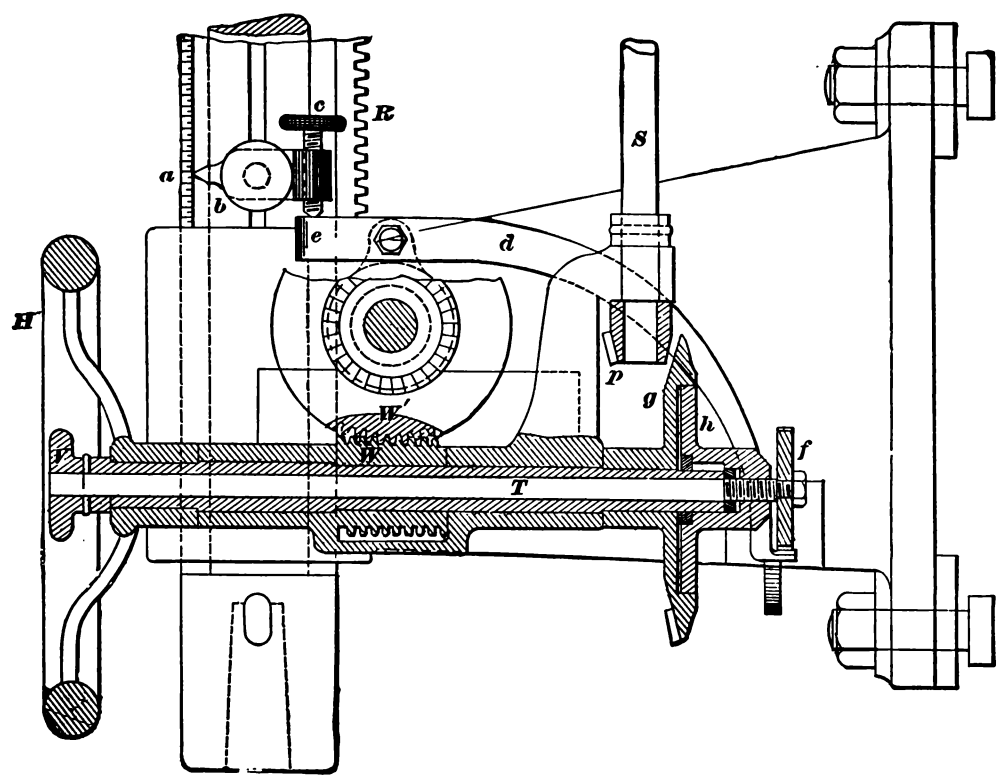
c
R
a
b
e
d
S
H
p
g
h
f
W'
T

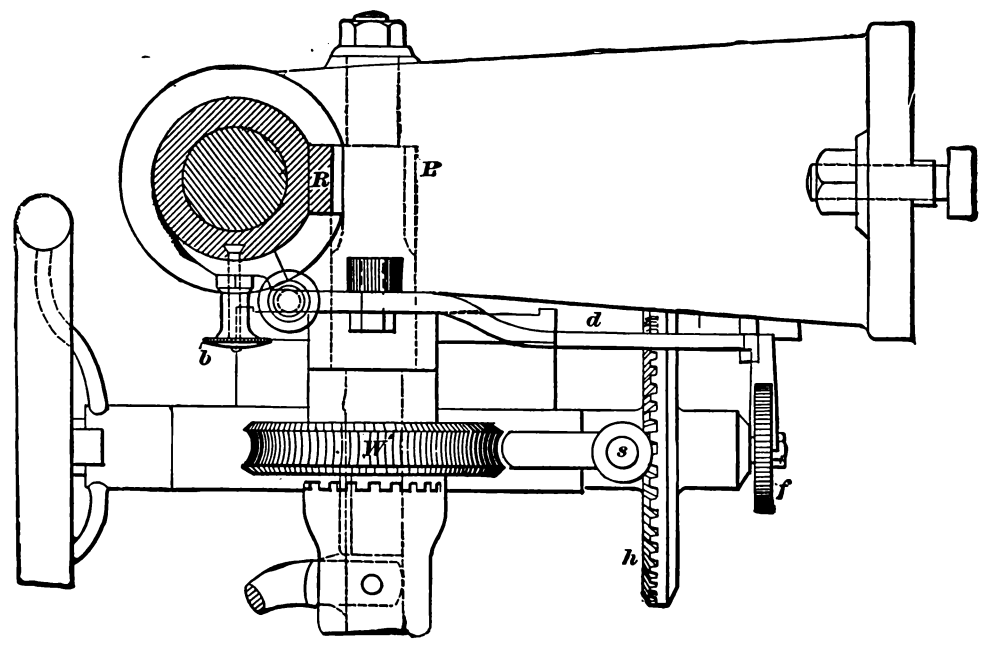
R
P
d
b
W
s
f
h

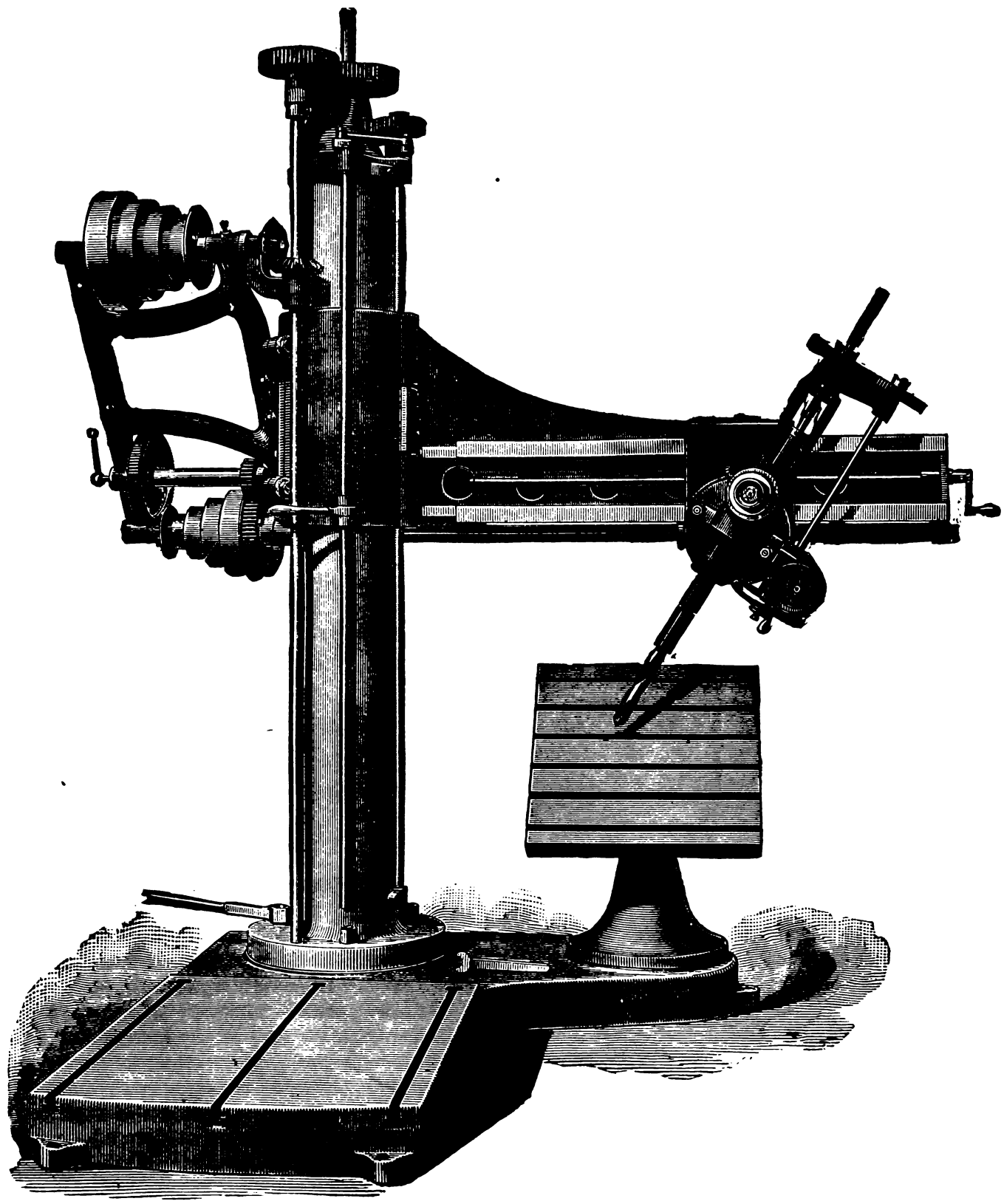

Fig. 1680.

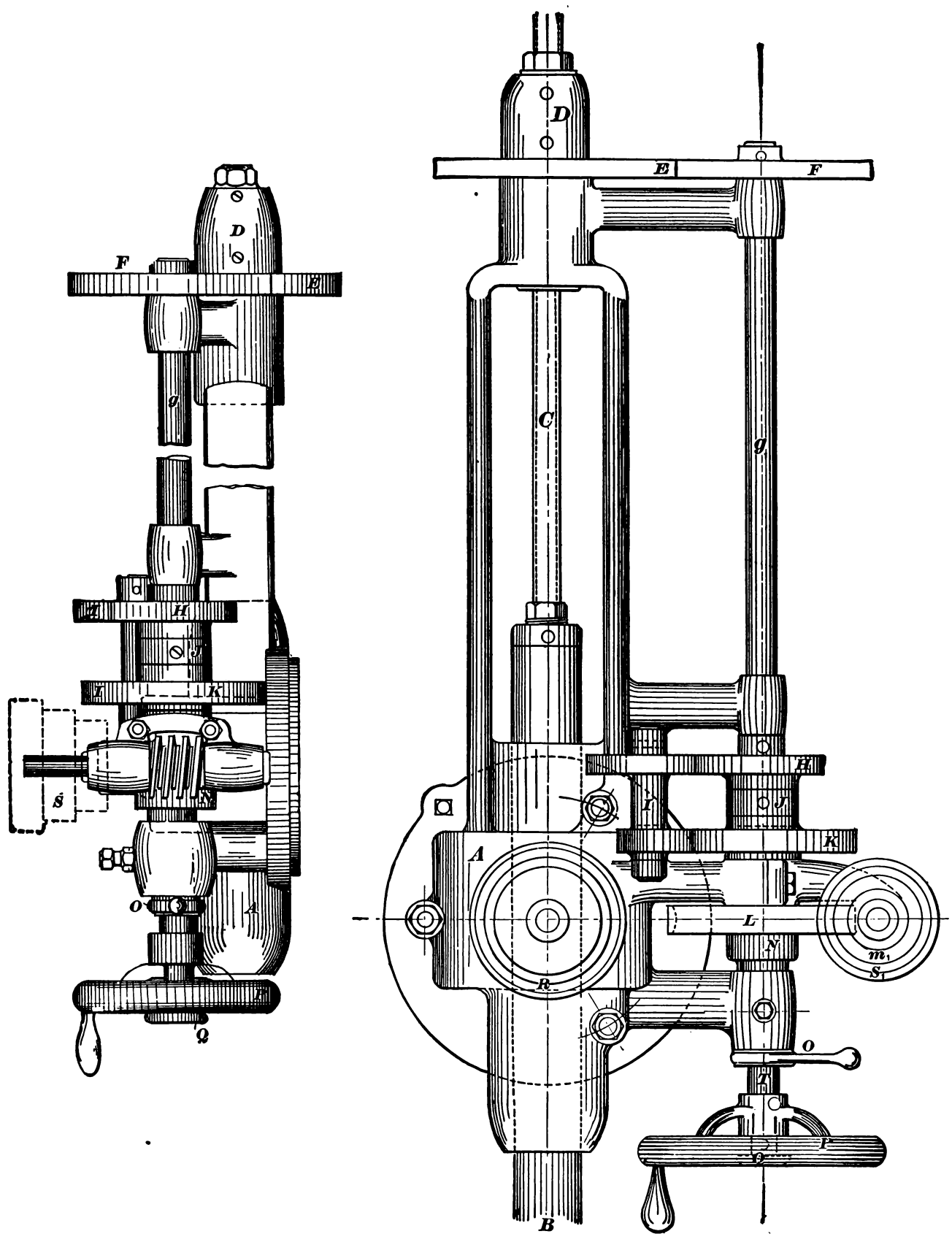
D
F
E
g
H
J
I
K
S
N
O
A
P
Q
C
L
R
B
m1
S1

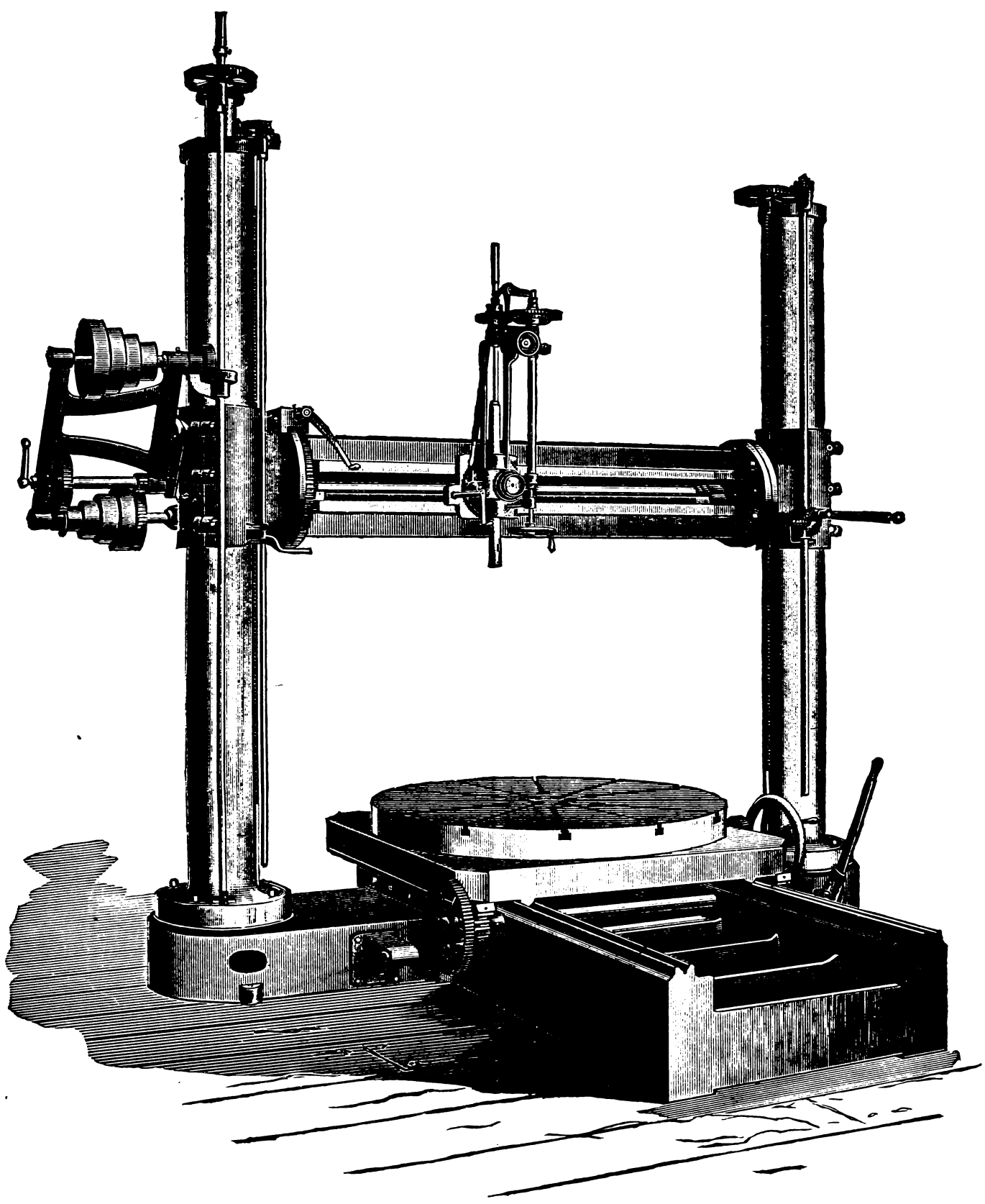

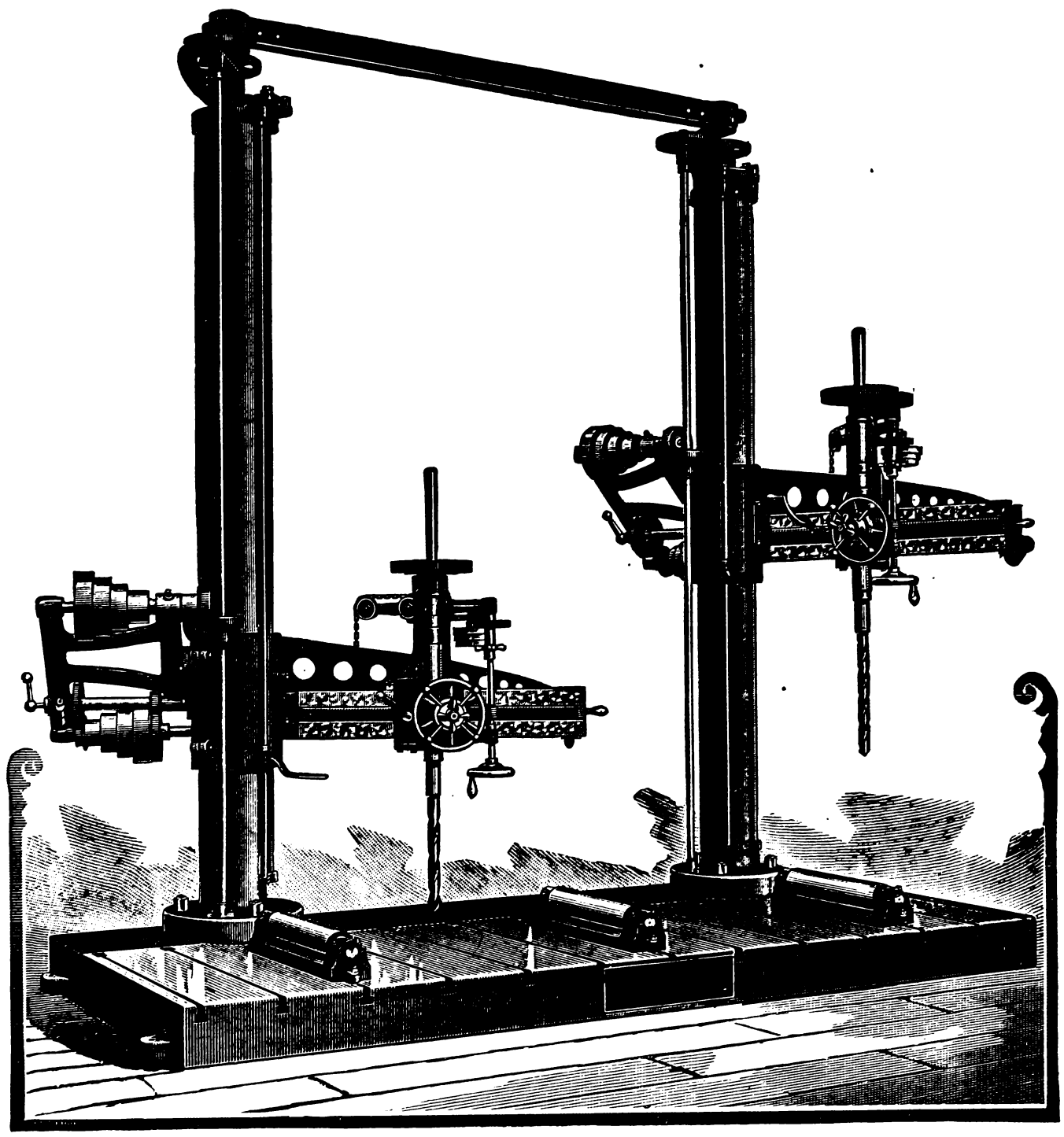

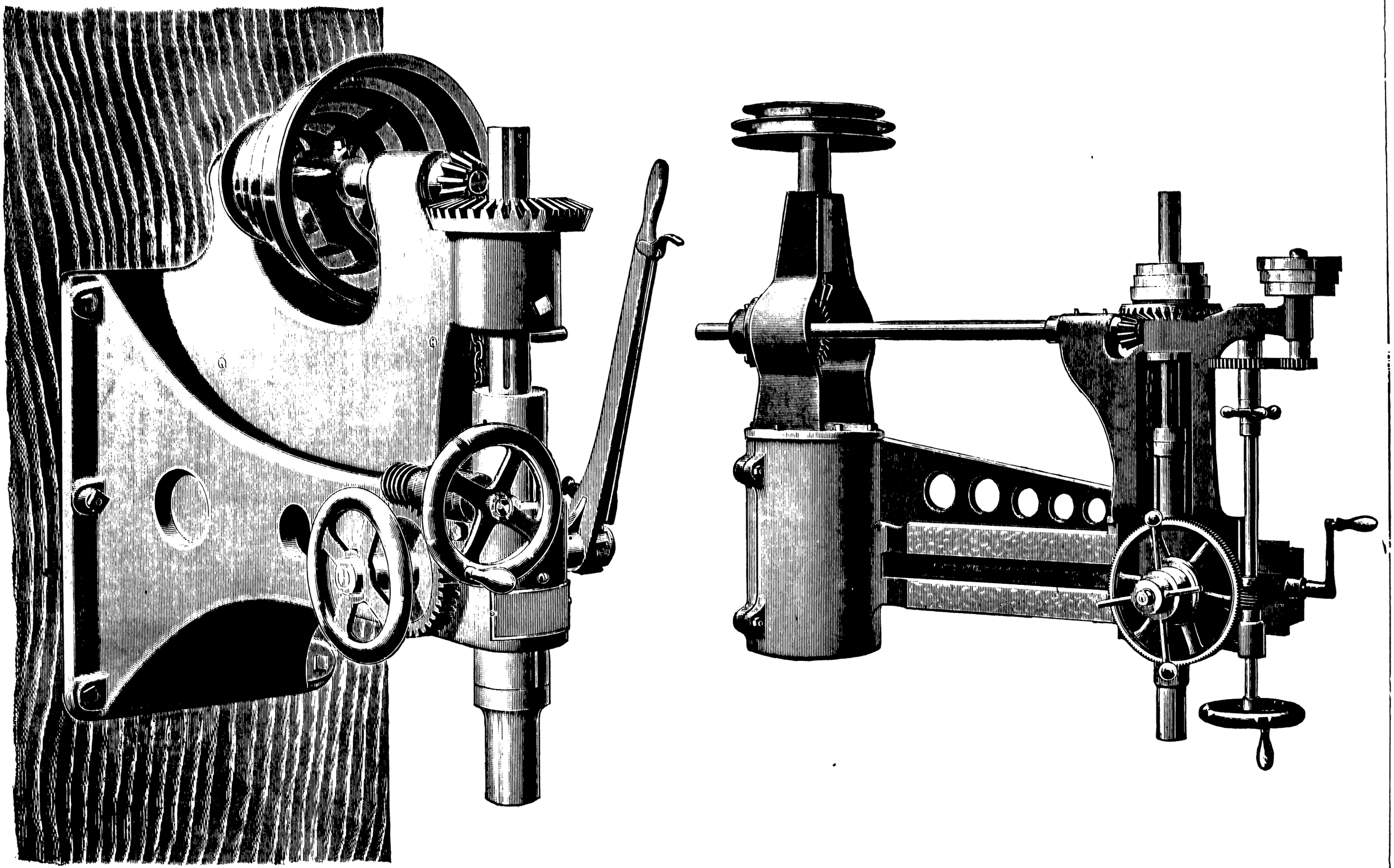

Fig. 1.

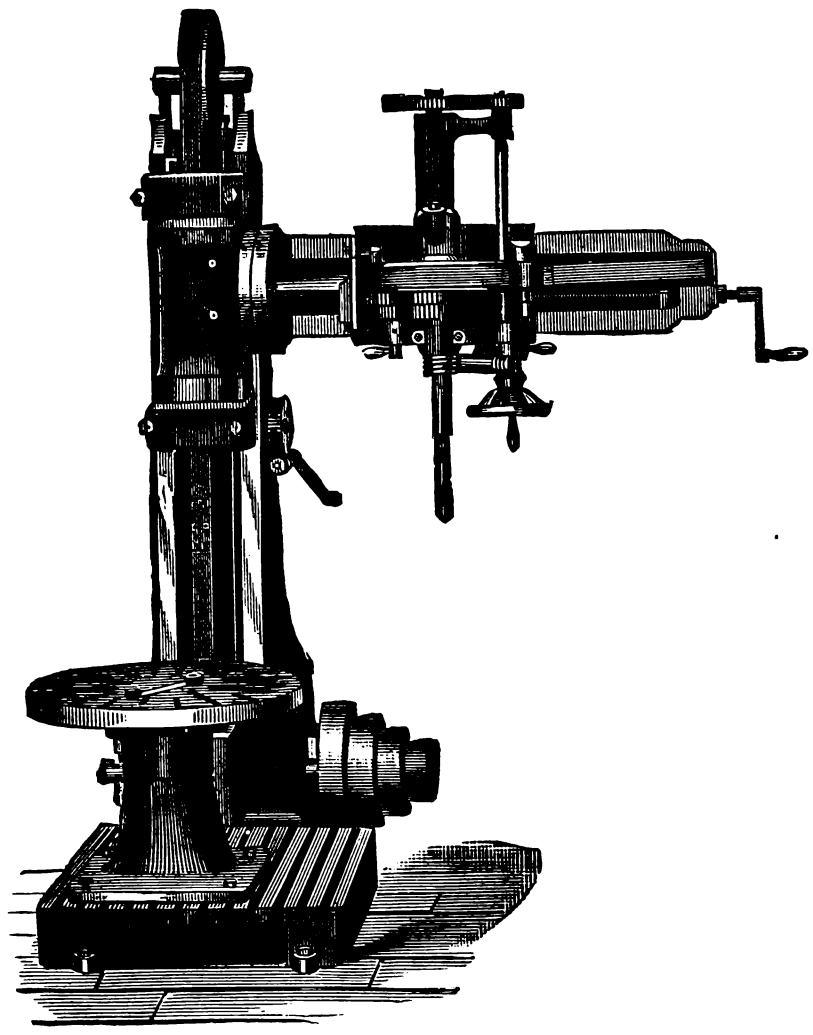

Fig. 1681.—Front View.

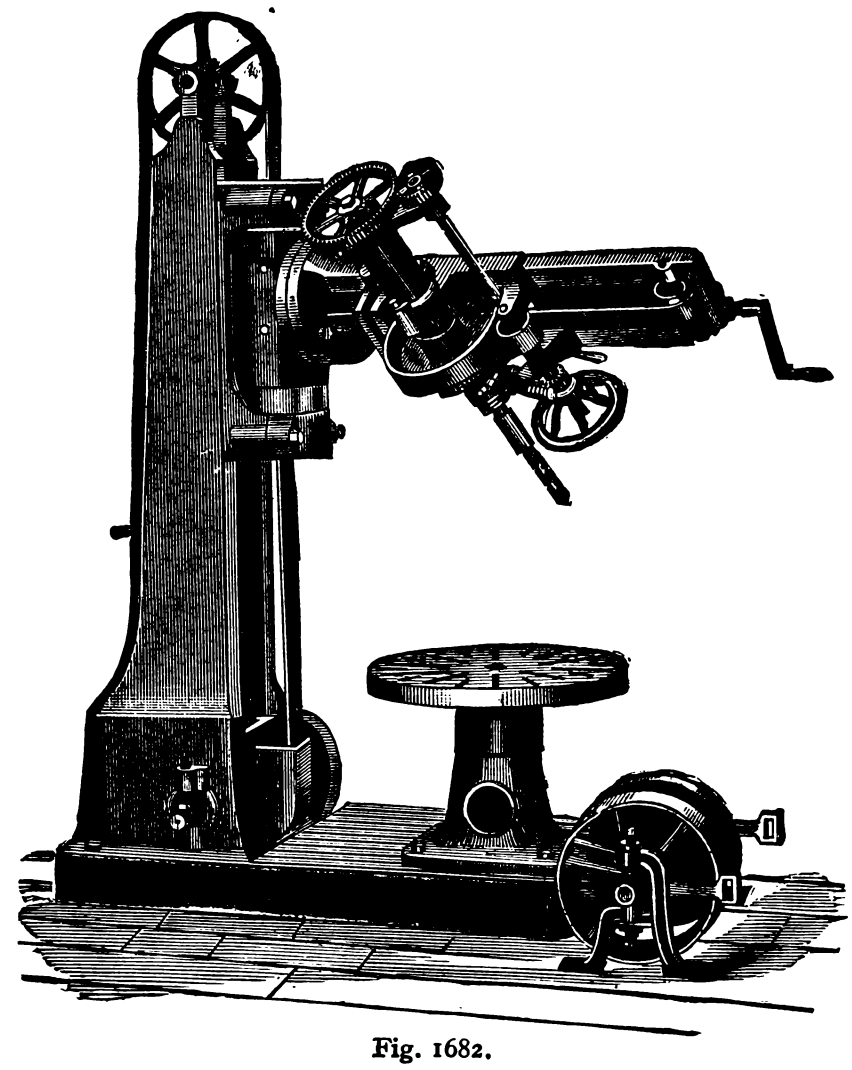

Fig. 1682.

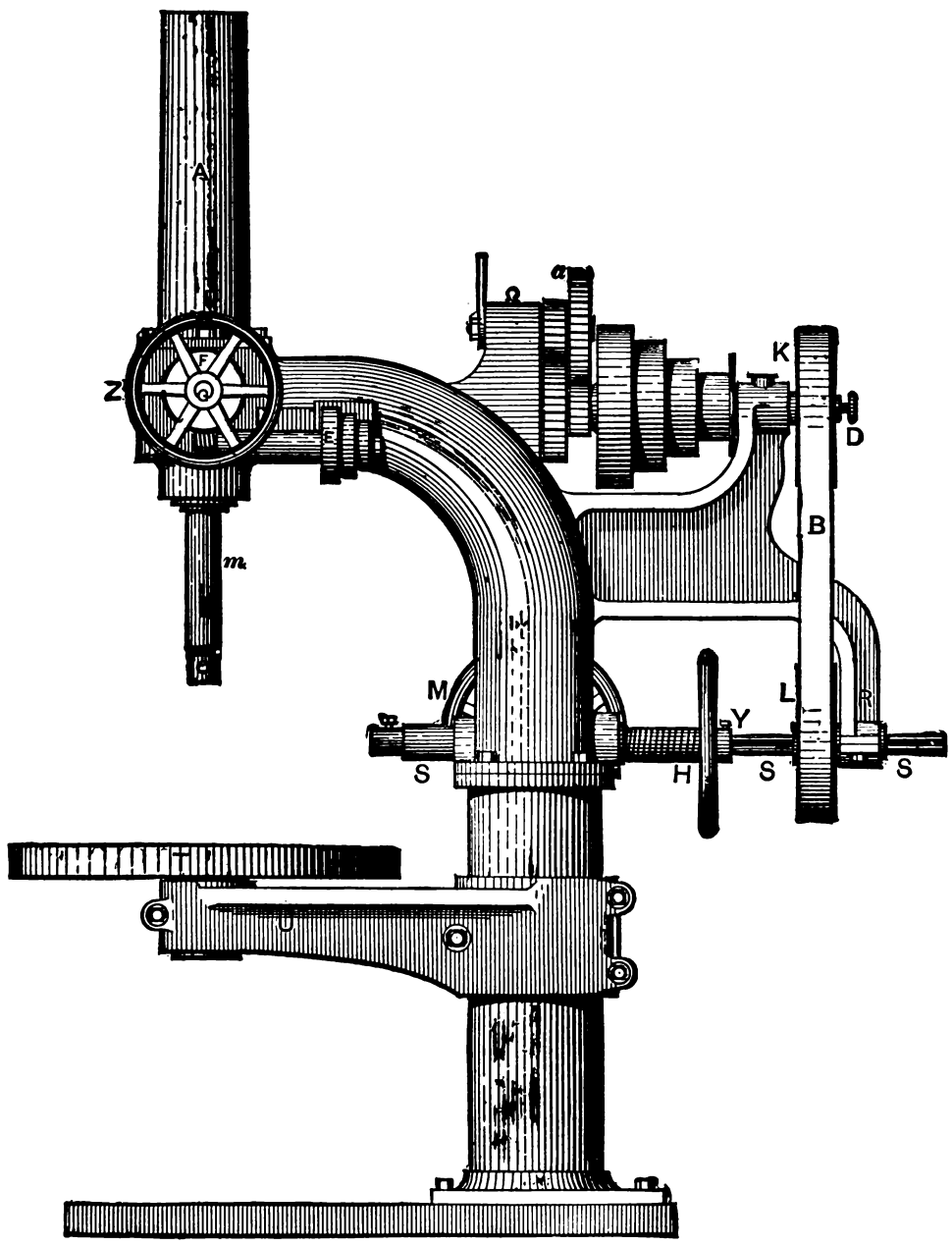

Fig. 1683.—Side Elevation.

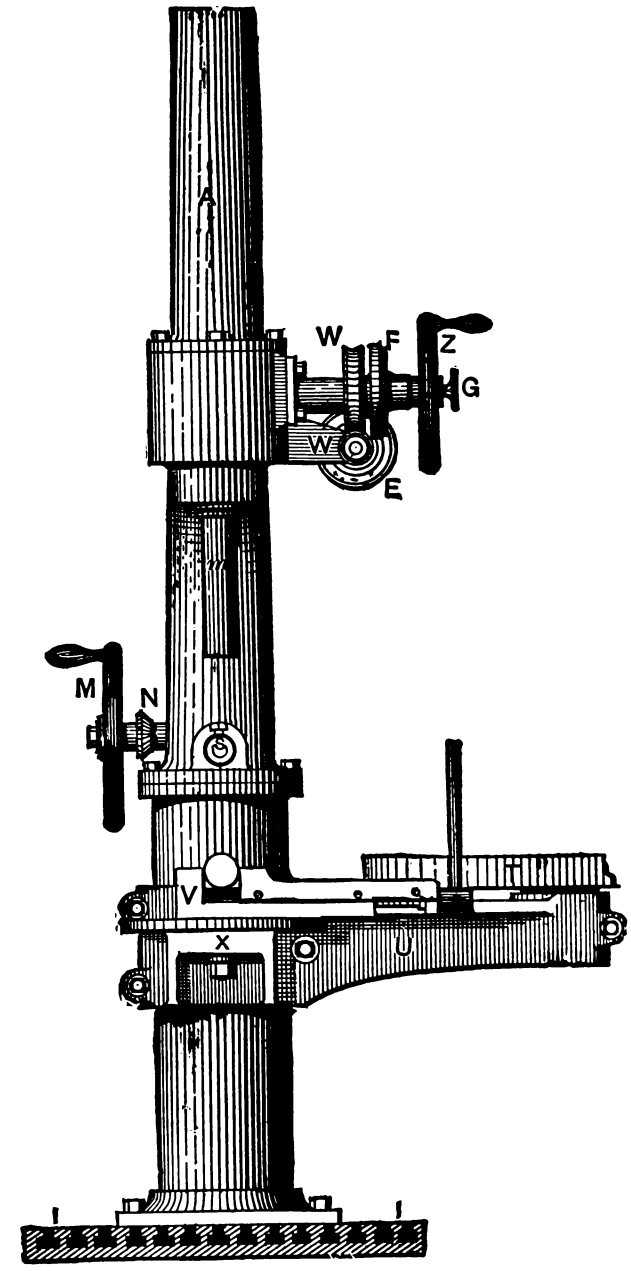

Fig 1684.—Front Elevation.

and the bevel gear shown is threaded to fit it, motion being imparted by the shaft and bevel pinion as shown. This not only makes a very convenient method of moving the table up or down, but the rigidity of the machine when doing heavy work is very much increased, as it will be evident that it must be.

Fig. 1 shows the regular Standard Drill Press with improved supporting arm for table, but without the other special features.

An example of a drill press having an automatic stop motion to enable the drilling of holes to an exact depth automatically, is given in the Lodge Davis Company's machine Plate (XCVIII.), details being given in Plate XCIX.

Motion by belt is transmitted from the pulley C to pulley D, there being three changes of feed motion; at the lower end of the feed spindle *s* is the pinion *p* driving the bevel gear *g*, which is obviously in continuous motion when the machine is running.

All that is necessary, therefore, is to set the pointer *b* in the proper position for the depth of hole required, and any number of consecutive holes can be drilled with the assurance that they will all be of the same depth.

It is obvious that when the knob V is operated to screw T into *k* and put the automatic feed in motion, the motion is continued from T through the worm W, worm wheel W', the pinion P, and the rack R, and also that when the disk *k* is disengaged from *g*, the worm W may be operated for the hand feed by the hand wheel *k*.

On the front of the spindle sleeve is the line of graduations shown at *a*, and at the side, fitted to a dove-tailed slot, is a pointer *b*, which by a knurled nut can be clamped at any desired position along the slot. Through an extension of this pointer passes the screw shown at *c*, the end of which comes into contact with the lever *d* at *e*; the other end of *d* engages with a ratchet wheel *f*, which is keyed to a shaft T, passing through the worm-shaft, and having at the other end the usual knurled button V for manipulating the feed. This shaft T is threaded through the friction disk *k*, and when the feed is in operation all these parts, of course, revolve together in the usual manner, and the drill is fed automatically until the end of the screw *c* comes into contact with the end *e* of lever *d*, whereupon the lever *d* operates and throws the ratchet wheel *f* out of connection, and the friction disk *k* is thrown out of gear with its driving gear *g*.

RADIAL DRILLING MACHINE.—Fig. 1680 represents a radial drilling machine, the column of which envelops a sleeve round which it may be swung or revolved, the sleeve extending some distance up from the base plate. The arm fits to the column and may be raised or lowered to any desired height to suit the work, the construction being as follows:—

Motion by belt is given to the spindle shown extending above the top of the column, and the pair of gears beneath it convey motion to the pair of bevels which drive the upper cone pulley which connects by belt to the lower one, which is provided with back gears to give the necessary changes of speed and power for the wide range of work the machine is intended for; the live spindle of the lower cone pulley extends past the collar and runs beneath the horizontal arm, giving motion to the drill spindle, which is carried in a sliding head. The spindle may be set at any required angle to the arm.

The vertical screw on the right hand of the column passes through a nut in the column, so that by throwing the gearing at the upper end of the screw into action, the arm may be raised or lowered by power.

The vertical rod appearing in the front of the column and having an arm at its top, is for putting this gearing in or out of action, the arm being raised or lowered according to the direction in which the rod is operated by the lever handle shown upon it, and in front of the column. The gearing at the top of the raising and lowering screw is constructed on the principle that was shown in Fig. 566, for reversing the direction of a lathe feed.

The capacity to swing the drill spindle at an angle enables the drilling of long work such as the flanges of pipes, by setting the pipe at an angle and swinging the spindle so as to stand parallel to it, while the facility with which the arm may be moved to any required position makes it easier to move the arm to the work, so that the latter will require but one chucking or setting.

In an improved form of radial drilling machine by the Cincinnati Radial Drill Company, the Universal Spindle head is mounted on the saddle or slide of the arm, and can be set at any angle with reference to the face of the arm, as shown in Plate CI.

The spindle head consists of main frame casting A, to which all working parts of the head are attached; B is the spindle, C the feed screw, free to revolve in top end of spindle; D is feed nut fixed to gear E, and driven by gear F. Top gear shaft *g*, and hand wheel shaft T, are in the same line. The gear H is fixed to shaft *g*. The speed clutch is located inside of ring J, and operated by the button Q, under hand wheel. The speed gears I are one piece—*i.e.*, revolve together on one pin and engage gears H and K. Gears H and K are provided with clutch faces next to ring J. When clutch button Q is up, the hand wheel shaft acts as if continuous in shaft G; and if down, so as to clutch the shaft T to wheel K; then on turning the hand wheel the motion is communicated through the speed gears I, thereby increasing the speed of gear shaft G to three times the speed of the direct hand wheel connection. So arranged, it serves for quick return of spindle when withdrawing the drill from the work, or for any purpose requiring rapid movement of the spindle.

For power feed, the worm wheel L is clutched to hand shaft T by simply turning the handle O. The worm M is belted for three speeds, and since the clutch Q gives two directions through which feed worm may drive the shaft G, it follows that the spindle is provided with six degrees of power feed. All operating parts are easily accessible and located near each other. The compact central location of mechanism balances it for handling, and keeps it out of operator's way.

Plate CII. represents a double column Universal Beam Drill by the Cincinnati Radial Drill Company, having a round table mounted upon a sliding carriage or platen.

In operation, work is placed upon the round chucking table, and by the traverse of the square table on the shears it is run under the spindle, and as the head travels horizontally on the beam, and the round table can be revolved to any point, it is easy to bring the spindle to any desired place on top of the work; when top drilling is finished, both tables are run forward on the shears, the beam is lowered to an approximate position by power, then swivelled till the spindle is in a horizontal position, when side drilling upon the work can be done, and on one or all sides of any piece of work, by revolving each side or face of the work into position before the spindle. There is a hand movement for delicate adjustment of the beam in a vertical line. Both the revolving chucking table and square table have clamping device to secure them in proper position.

A double column machine, also by the Radial Drill Company, but having a separate drilling arm on each column, is shown in Plate CIII.

Fig. 1 (Plate CIV.) represents what is called a post drill, constructed by the Cincinnati Radial Drill Company.

It consists of a head or frame having a four-stepped cone driving the drill spindle through the medium of a pair of bevel gears.

It is provided with a lever ratchet feed and a hand feed through the medium of a worm and worm wheel, the wheel for operating the worm being the one shown in front of the machine.

The hand wheel on the left is for a quick return motion for the drill spindle.

The drill spindle is fed endwise through its fixed bearings, and is counterbalanced by a weight suspended within the frame of the machine.

Drilling heads of this class are sometimes bolted to walls, and possess the advantage that there is no framework or work table beneath the drill spindle to be in the way of awkward shaped or cumbersome pieces.

In some cases, especially in those in which the head is bolted up against a wall, these machines are provided with self-acting or automatic feed motions, while in other cases more changes of drill speed are given by providing the head with back gears, which is necessary when drills of large sizes are intended to be used or when the machines are intended to be used for boring purposes.

In this latter case, however, a base plate is sometimes provided upon the floor beneath the machine, having a suitable hole and bushings to receive and steady the ends of the boring bar.

Fig. 2 (Plate CIV.) represents a portable drilling head driven by a rope and intended to be moved about the shop to the work wherever it may be.

The rope pulley at the top of the machine drives (through the medium of the bevel gears shown) the horizontal spindle shown, which in turn, through the medium of a second pair of bevel gears, drives the drill spindle and also a three stepped cone for the feed motion. This three stepped cone drives a similar cone shown on the right hand upper corner of the machine, which, through the medium of the pair of spur gears shown, drives the vertical feed spindle shown on the right hand of the machine.

At the lower end of this feed spindle is the worm and worm wheel for the automatic feed motion, the worm wheel being clutched and unclutched to throw the automatic feed in or out.

A quick return motion is given to the drill spindle by a suitable pinion engaging in the teeth shown upon the sleeve enveloping said spindle.

The whole head may be moved along the arm by operating the lever handle shown on the right hand of the machine, the arm being provided with a suitable slideway and screw.

The base of the machine (which is not shown in the illustration) is simply a cylindrical pillar with a suitable base to fasten to the floor, this pillar fitting into the cylindrical sleeve shown on the left hand lower corner of the machine.

The two screws shown on this cylindrical sleeve are for securing the machine in its adjusted position upon the base.

Radial drilling machines are of various constructions. In some the drilling head is carried by an arm standing at a right angle to the main column or frame, and is capable of being moved to any required position upon the length of this arm. The arm itself is sometimes made capable of swinging upon its own axis, as shown in Fig. 1682.

It is also capable of being adjusted at any height from the bed or base plate upon which the upright or main frame sits, or above the work table when one is used as in the figure.

The advantage given by these facilities is that a heavy piece of work may be set upon the base plate or work table, and be drilled in various places without requiring to be moved.

Figs. 1681 and 1682 represent a radial drilling machine, in which the radial arm is carried on a head, which fits a vertical slideway provided on the face of the upright column, and may be moved to any required height on this slideway by means of a rack and worm gear, the latter being shown in the front view.

The seat of the arm on this head is cylindrical, the head being pivoted upon it in order that it may permit of its being rotated to hold the drill at an angle. The drill spindle is carried in a head sliding on the radial arm as already stated, and is driven as follows :—

Motion from the shop driving shaft is communicated by belt to the cone pulley shown at the base of the upright column.

The spindle of this cone pulley drives a belt which passes up the column over an idle pulley on the sliding head that carries the radial arm; hence it passes along the front of the radial arm and partly round a pulley on the drill spindle, two idle pulleys holding it in contact with the drill spindle pulley. Hence it passes over a small pulley at the outer end of the radial arm, and returns along that arm through the sliding head, over an idle pulley to the pulley seen at the head of the vertical column, and from this pulley it passes to the pulley that is on the cone spindle shaft at the base of the column. The drill is provided with an automatic feed actuated by the worm shown on the drill spindle.

In Figs. 1683, 1684, and 1685 is represented a combined drilling and boring machine.

It is provided with an horizontal as well as with a vertical spindle, either of which may be used for boring as well as for drilling. In the case of the vertical spindle the boring bar may extend down and have journal bearing in a block, or bearing secured to the base plate I.

Each spindle has eight changes of speed, four in single and four in double gear, that is, when the back gears at *a* are in operation.

Motion from the pulley K on the cone spindle is conveyed by belt B to pulley L, whose hub extends through the frame at R and affords journal bearing to that end of spindle S which has a feed motion at H. Motion is conveyed from the cone spindle to vertical spindle *m* as follows :—

Referring to Fig. 1685, bevel wheel *f* is on the end of the cone spindle and drives bevel wheel *g*, which drives spindle *m*. This spindle is provided with an automatic as well as a hand feed motion, the construction being as follows :—

Referring first to the automatic feed, the cone pulley E', Fig. 1685, which is upon the main cone spindle of the machine, drives cone E, Fig. 1683, and the latter operates a worm W, Fig. 1684, engaging a worm wheel W, which drives the bevel gear *a*, shown by dotted circles in Fig. 1685 ; *a* drives the bevel gear *c* upon the sleeve *o*, which has journal bearing (in the frame A of the machine) both at its upper end and immediately above C. The upper end of the sleeve *o* is threaded to receive an inner sleeve *n*, within which

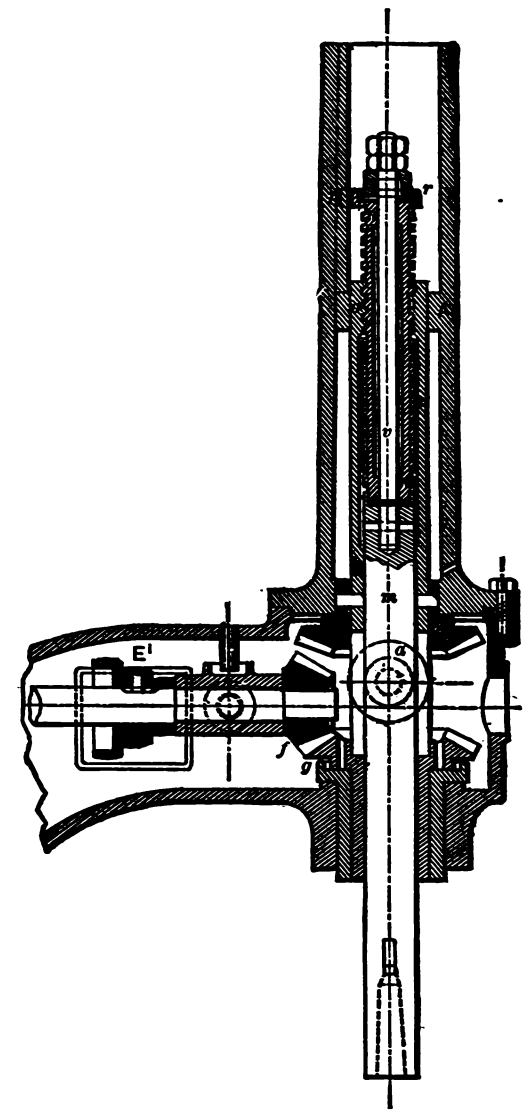

Fig. 1685.

is a spindle *v*, having journal bearing at each end of *n* and being fast to *m*, so as to revolve with it. End motion to *n* is prevented by a collar at its upper end *r* and by three steel washers at *i*, the latter taking the thread when the drill spindle *m* is in operation. The inner sleeve *n* is prevented from revolving by means of a lug or projection which passes into a slot or groove running vertically in the bore of the outer casing A ; hence when *o* is revolved by *a* it acts as a nut to *n*, causing the latter to move endways and feed the drill spindle *m*.

To enable the engagement or disengagement of the automatic feed, there is at F, Fig. 1684, a friction disk, the female half of which is fast upon the spindle that drives bevel gear *a* in Fig. 1685, while the male half is in one piece with the hand wheel Z, Fig. 1684, which has journal bearing upon the spindle of *a*. O is a hand nut for engaging or disengaging the friction disks. In addition to the ordinary work table T, the knee U carries on a projection X a work holding vise V, which is a great convenience, especially for cylindrical work. The base of the machine is provided with a plate upon which work may be secured independent of the work table T, or the lower end of a boring bar may be steadied by a step bolted to the base plate.

The construction of the machine, as will be seen, is very substantial throughout, since all the strains are central, the spindles are well supported, and there is a commendable absence of springs, pull-pins, and other light parts that are liable to get out of order from the wear and tear of the ordinary machine-shop tool. It may also be remarked that the combination of the two spindles is effected without impairing either the usefulness or handiness of the vertical spindle.

In Fig. 1686, which is taken from *Mechanics*, is illustrated a combined drilling and turning machine. In this machine the motion for both drilling and turning is received by belt on the cone pulley shown on the right, which is provided with back gear similar to that of a lathe. The live spindle thus driven has a face plate at the left-hand end, whereon work may be chucked to be operated upon by a tool in the compound slide rest shown on the cylindrical column. Motion to the drill spindle is conveyed by belt from a pulley on this same live spindle, hence the same cone pulley and back gear are utilized for either drilling or turning. The self-acting feed for the drill spindle is actuated by an eccentric on that spindle operating an arm, having a pawl engaging with the ratchet wheel on the lower end of the vertical feed spindle. Obviously when the pawl is thrown out of engagement with the ratchet wheel, the horizontal hand wheel may be used to feed the drill spindle by hand or to withdraw it, as the case may be.

The work table for drilling operations has motion laterally in two directions (one at a right angle to the other) by means of being carried on slides, and is fitted to a vertical slide on the face of the column so that it may be raised and lowered to suit the height of the work by means of the worm and worm-wheel shown, the latter being on the same shaft as a pinion engaging with a vertical rack on the face of the upright frame or column.

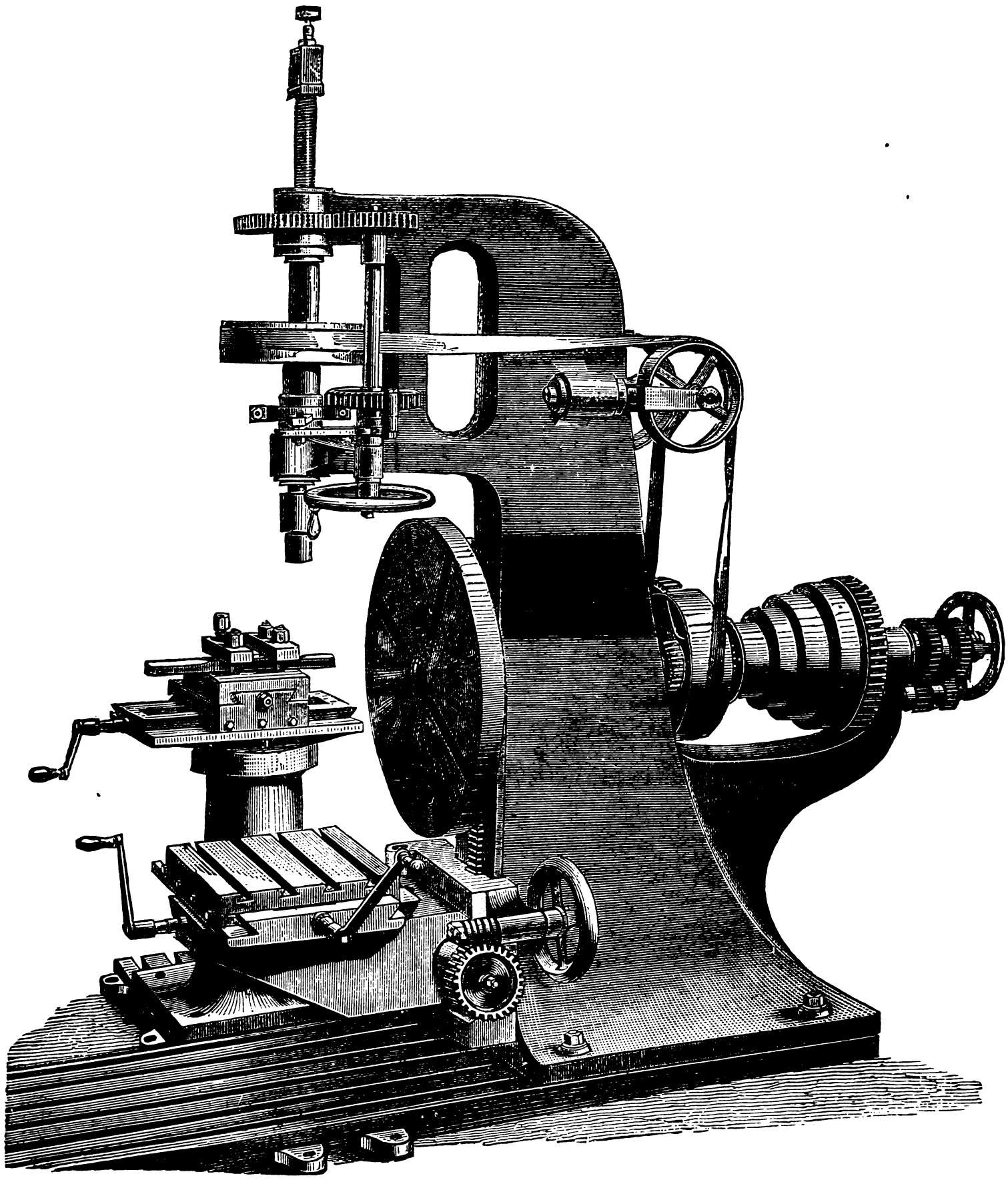

Fig. 1686.

In Fig. 1687 is represented a horizontal drilling and boring machine. In this machine the work-holding table is provided with a hand feed, and the drilling or boring spindle with hand and self-acting feed, the latter being variable to suit different kinds of work. The table has a compound motion upon suitable

slideways and rests upon a frame or knee that is elevated by two vertical screws that are operated by hand wheel. This knee fits to a vertical slideway on the main frame, so that its upper face, and therefore the face also of the work table, is maintained parallel with the drill spindle at whatever height it may be set from it.

The arbor that carries the drill spindle is arranged with a face plate so that the machine can be used as a facing lathe. The feeds are arranged in two separate series, a fine and a coarse, and both of these series are applicable to any speed or any size of drill. The value of the coarse feed will be felt in all kinds of boring with bars and cutters, inasmuch as it is possible to rough out with a fine feed and finish with a light cut and a very coarse feed.

For work that is too large to be conveniently lifted to the table of a machine the floor boring machine is employed.

Fig. 1688 represents a machine of this class, which consists of two heads that may be moved about upon, and secured to, any part of its base or bed plate to which the work is secured. The boring bar it will be seen stands horizontal, and may be set at any height from the base plate between the limits of 14 inches and 6 feet 4 inches, the driving head being raised on its slideway on the face of its standard or column by automatic mechanism. The feed is automatic and variable in amount to suit the nature of the duty.

The bar has eight speeds, four in single and four in double gear.

In order to insure that the crank pins of locomotive driving wheels shall stand with their axes parallel to that of the wheel shaft, and that they shall also stand 90° apart when measured on the wheel circle, it is necessary that the holes for these pins be

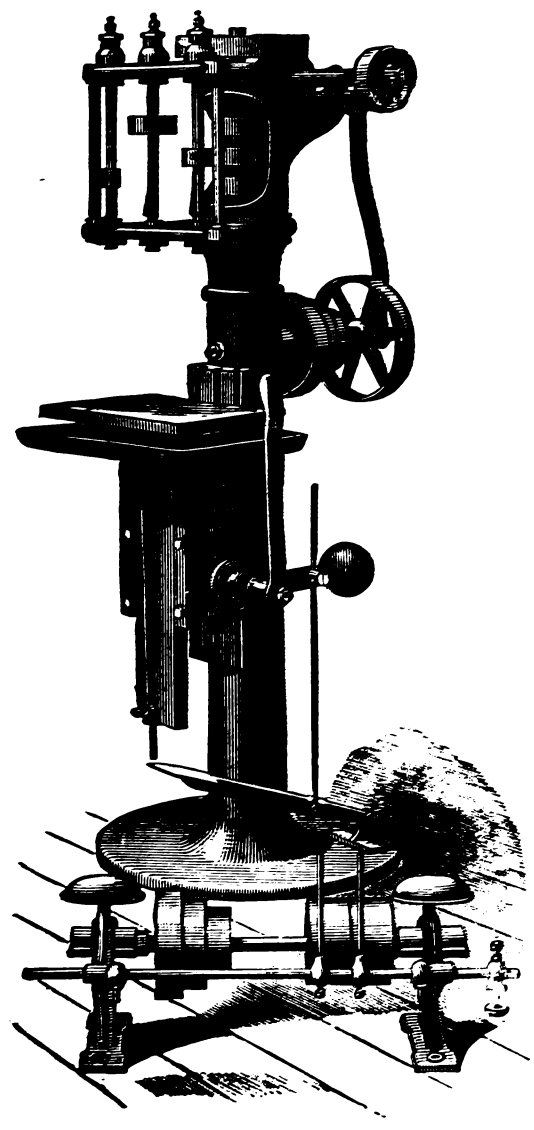

Fig. 1690.

bored after the wheels are upon their shaft, it being found that if the crank pin holes are bored before the wheels are upon the shaft they are liable to be out of parallel and out of quarter.

To avoid these errors a quartering machine is employed, such as shown in Fig. 1689. This machine consists of two heads carrying stationary or dead centres to hold the wheel axle, as in a lathe. Each of these heads is provided with a boring bar having an automatic and adjustable feed, the axes of these bars being 90°, or one quarter of a circle, apart.

As both crank pin holes are bored simultaneously and with the wheel rigidly fixed and held upon centres the work will obviously be true. This machine may also be used as an ordinary horizontal boring machine.

Multiple drilling machines are employed for two general purposes: first, those in which a number of holes may be advan-

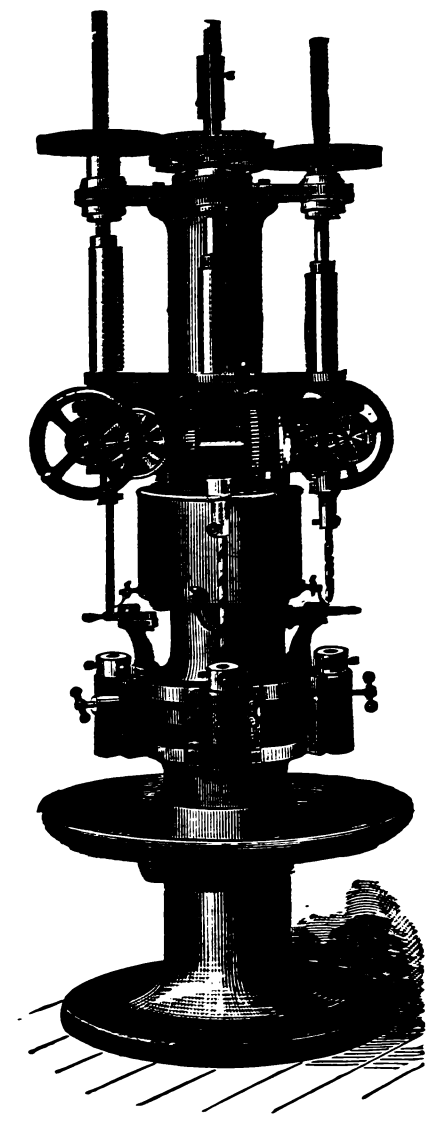

Fig. 1691.

tageously drilled simultaneously; and second, where a number of operations require to be performed upon one and the same hole. When the object is to drill a number of holes spaced a certain distance apart in one piece of work, the spindles may be so constructed that their distances one from the other may be adjustable, so that they may be set to drill the holes equally or unequally spaced as may be required.

In such machines it will be more convenient to feed the work to the drill, so as to have but one feed motion, instead of having a separate feed motion to each drill spindle. When, however, a number of separate operations are to be performed upon the same hole, it is preferable to rotate the table so that the work may be carried from one spindle to the other, the spindles feeding automatically and simultaneously.

Fig. 1690 represents a three-spindle drilling machine. The main driving spindle is vertical and within the top of the column, having three pulleys to connect by belt to the vertical drill driving spindles, whose driving pulleys are of different diameters to vary the speed to suit different diameters of drilling tools. A foot feed is provided by means of the treadle, and a hand feed by means of the lever, the weight of the work table being balanced by means of the ball weight shown. The work table is adjustable for height in a main table, that is adjustable for height on the face of the column. Similar machines are made with four or more spindles.

Fig. 1691 represents a four-spindle machine, in which each spindle has a separate and independent feed, which may be operated in unison or separately as may be required.

The four spindles are driven by means of a gear-wheel engaging

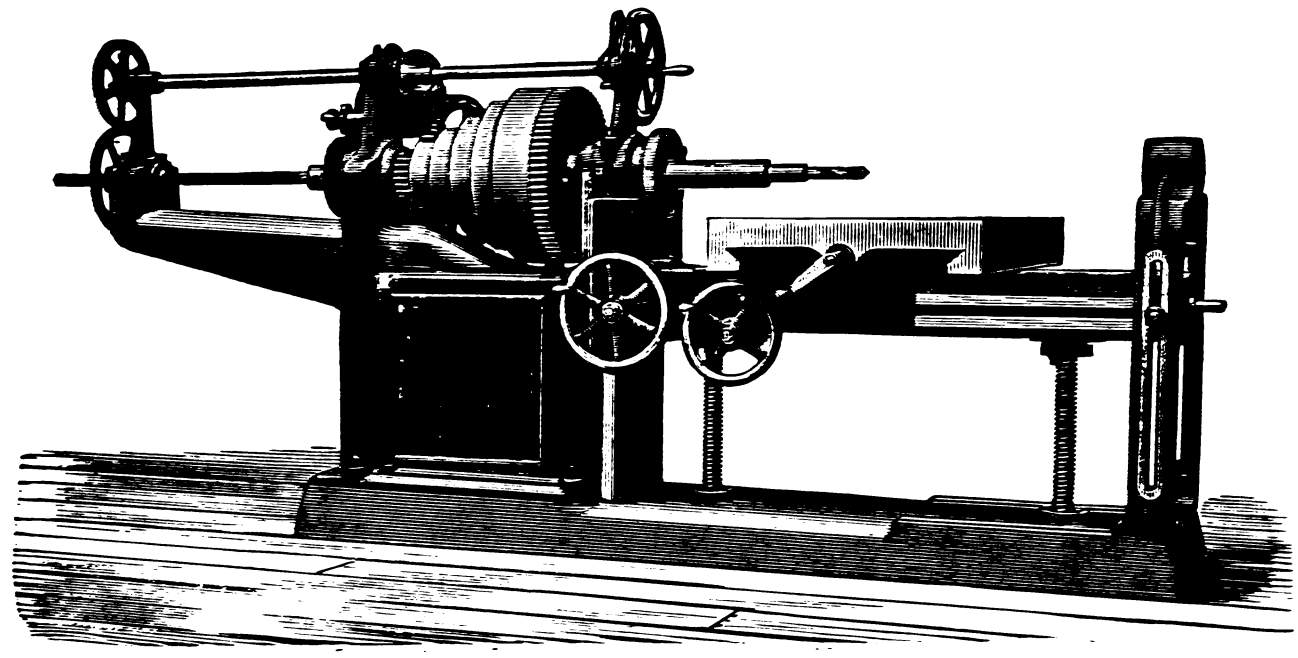

Fig. 1687.

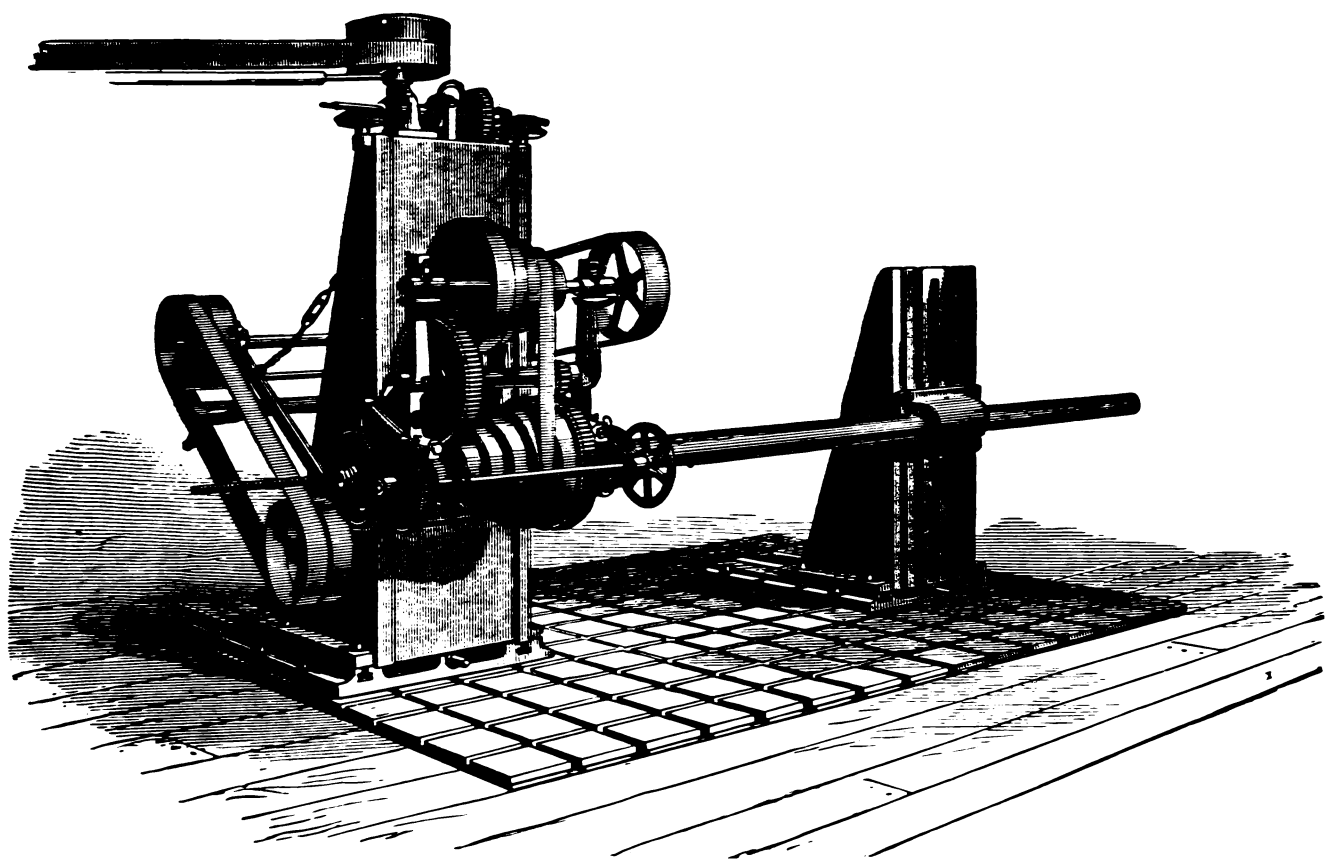

Fig. 1688.

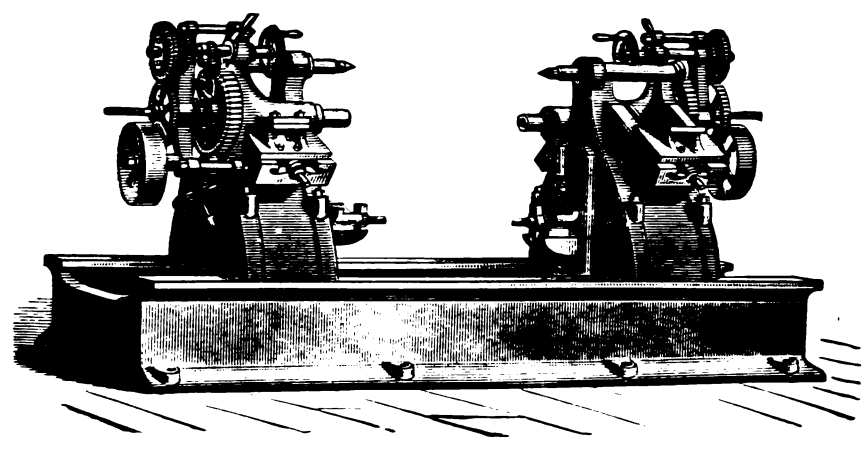

Fig. 1689.

with a gear on the central or main driving spindle. The work-holding table rotates about the column of the machine, and is arranged with a stop motion that locks the table in position when the work-holding chucks are exactly in line with the drill spindles. Suppose, then, one spindle to drive a drill, the second driving an enlarging drill, a third driving a countersink, and a fourth a reamer. A piece of work may then be fastened beneath the first spindle and be drilled. The table may then be rotated one-fourth of a revolution, bringing it beneath the enlarging drill, while a second piece of work is placed beneath the first or piercing drill. The table may then be given another quarter rotation, bringing the piece of work first put in beneath the countersink, the second beneath the enlarging drill, while a third piece may be placed beneath the first or piercing drill. The table being again given one-quarter rotation the first piece will be brought beneath the reamer, the second beneath the countersink, the third beneath the enlarging drill, and a fourth may be placed beneath the piercing drill; all that will then be necessary is to remove the first piece when it arrives at the piercing drill and insert a new piece; the four spindles operating simultaneously, and the process continuing, the four operations proceed together.

Thus the piece of work is finished without being released from the holding devices, which insures truth while requiring a minimum of attendance. The amount of feed being equal for all four spindles the depth to which each tool will operate is gauged by the distance it stands down from the feeding head, each spindle being capable of independent adjustment in this respect, so that the tool requiring to move the farthest through the work will meet it the first, and so on.

Figs. 1692 and 1693 represent a combined drilling and turning machine for boiler-maker's use. The machine consists of two uprights or drill standards which can be traversed along horizontal slides on beds which are fixed at right angles one to the other. The work to be drilled is carried on a turntable or work-holding table, the pivot and carrying frame of which can be traversed along a third set of guides lying between the other two and forming an angle of 45° with either of them.

Thus, by adjusting the relative positions of the turntable and the drill standards (each of which carries two drills), either a large or a small boiler can be conveniently operated on. Worm-gear is provided for revolving the turntable, either to divide the pitch of the holes, or when the machine is used for turning the edges of flanged plates, or for boring the large holes for flue tubes. Longitudinal seams may be drilled by laying the boiler horizontally on chucks alongside one of the beds, and traversing the drill standard from hole to hole.

Referring especially to Fig. 1693, A^3 and A^5 are the two wings of the bed plate, each being provided with V-slides to carry the uprights or standards B^1, B^2, on each of which is a drilling head C^1 C^2, these being each adjustable vertically on its respective standard by means of rack and pinion and hand wheels D^1 and D^2. The heads are balanced so that the least possible exertion is sufficient to adjust them. The vertical standards B^1 and B^2 are provided at their bases with a gear-wheel operated by means of pinions at G^1, G^2, so that they may be rotated upon the sliders E^1 and E^2, by means of which they may be traversed along their respective bed slides. The drilling heads are composed of a slider on a vertical slide on the face of the vertical standard

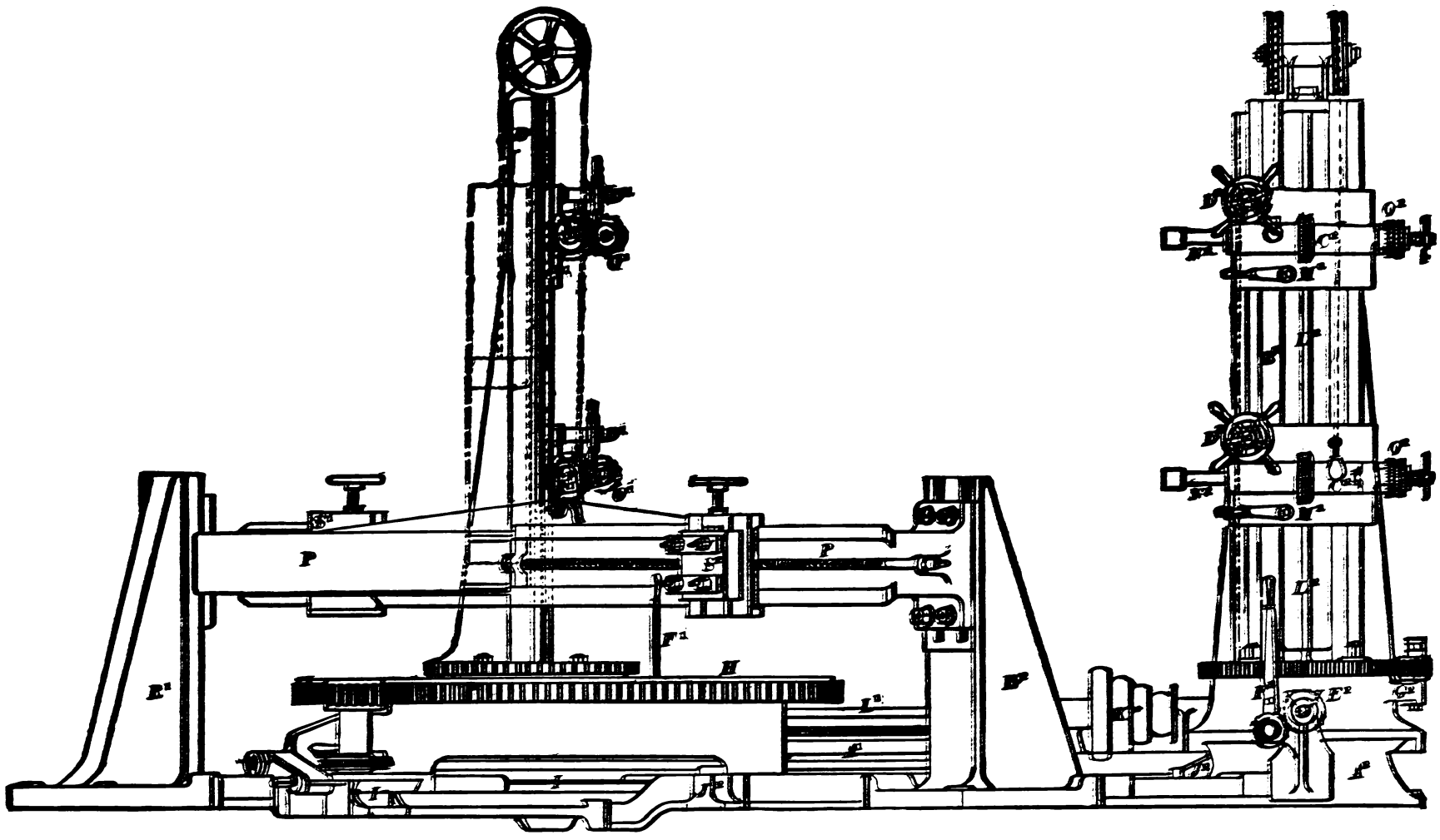

Fig. 1692.

or upright, rotary motion and the feed being operated as follows: Power is applied to the machine through the cones K^1 and K^2, working the horizontal and vertical shafts L^1 and L^2, &c. On the vertical shafts are fitted coarse pitch worms sliding on feather keys, and carried with the heads C^1 and C^2, &c. The worms gearing with the worm-wheels M^1 and M^2 are fitted on the sleeves of the steel spindles N^1 and N^2. The spindles are fitted with self-acting motions O^1 and O^2, which are easily thrown in and out of gear.

The shell to be drilled is placed upon the circular table H, which is carried by suitable framework adjustable by means of screw on the V-slide I, placed at an angle of 45° with the horizontal bed plates. By this arrangement, when the table is moved along I it will approach to or recede from all the drills equally. J^1 and J^2 are girders forming additional bearings for the framework of the table. The bed plates and slides for the table are bolted and braced together, making the whole machine very firm and rigid.

The machine is also used for turning the edge of the flanges which some makers prefer to have on the end plates of marine boilers. The plates are very readily fixed to the circular table H, and the edge of the flange trued up much quicker than by the ordinary means of chipping. When the machine is used for this purpose, the cross beam P, which is removable, is fastened to the

two upright brackets R^1 and R^2. The cross beam is cast with V-slides at one side for a little more than half its length from one end, and on the opposite side for the same length, but from the opposite end. The V-slides are each fitted with a tool box S^1 and S^2, having a screw adjustment for setting the tool to the depth of cut, and adjustable on the V-slides of the cross beam to the diameter of the plate to be turned. This arrangement of the machine is also used for cutting out the furnace mouths in the boiler ends. The plate is fastened to the circular table, the centre of the hole to be cut out being placed over the centre of table; one or both of the tool boxes may be used. There is sufficient space between the upright brackets R^1 and R^2 to allow that section

diameter, can be drilled in about $2\frac{1}{2}$ minutes, and allowing about half a minute for adjusting the drill, each drill will do about 20 holes per hour. The machine is designed to stand any amount of work that the drills will bear. The time required for putting on the end of a boiler and turning the flange thereon (say, 14 ft. diameter), is about $2\frac{1}{2}$ hours; much, however, depends on the state of the flanges, as sometimes they are very rough, while at others very little is necessary to true them up. The time required for putting on the plate containing the furnace mouths and cutting out three holes 2 ft. 6 in. in diameter, the plate being $1\frac{1}{8}$ inches thick, is three hours. Of course, if several boilers of one size are being made at the same time, the holes in two or more of

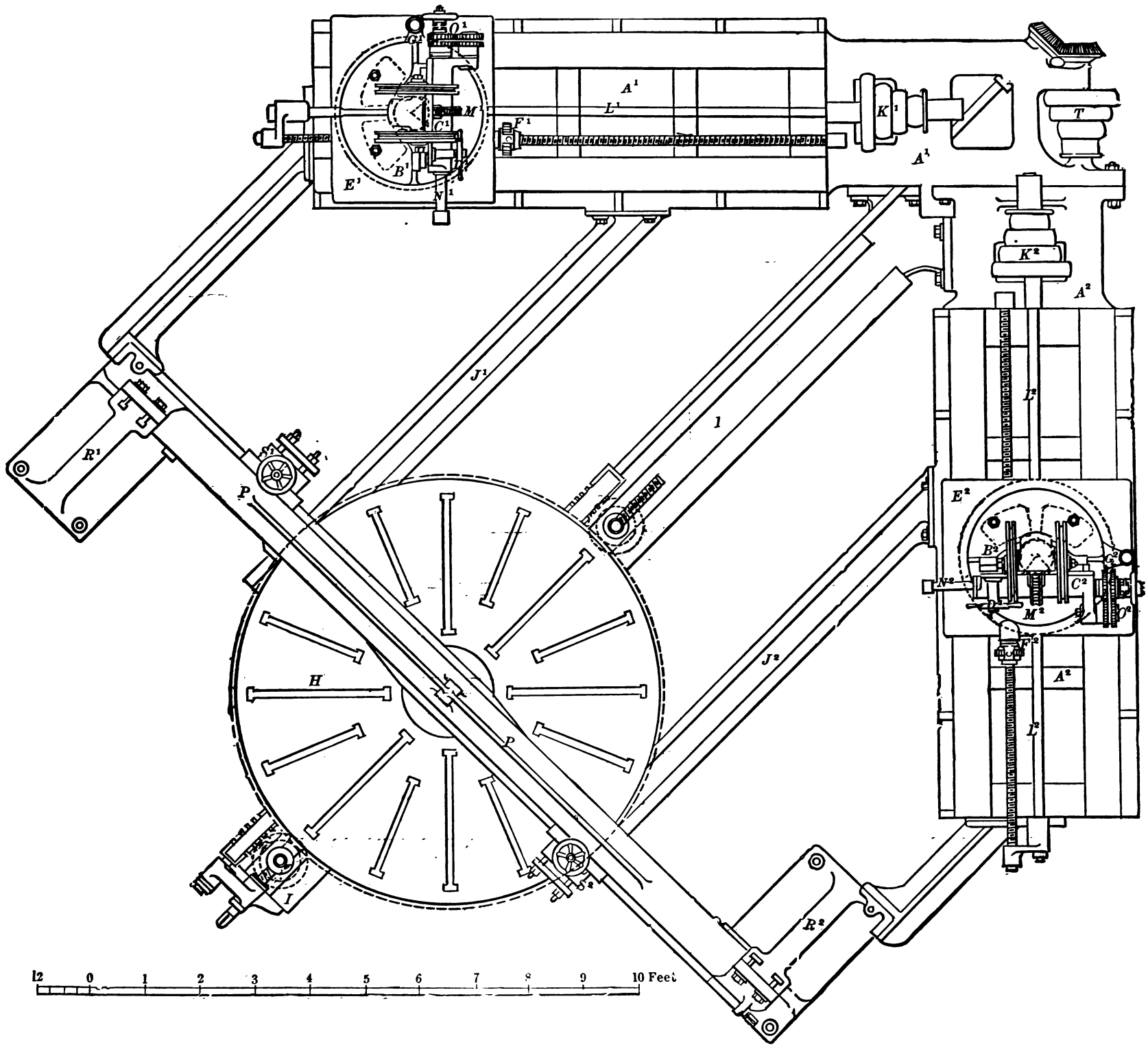

Fig. 1693.

of a boiler end which contains the furnace mouths to revolve while the holes are being cut out; the plate belonging to the end of a boiler of the largest diameter that the machine will take in for drilling. The holes cut out will be from 2 ft. 3 in. diameter and upwards. Power for using the turntable is applied through the cone T. The bevel-wheels, worms, worm-wheels and pinions for driving the tables are of cast steel, which is necessary for the rough work of turning the flanges.

As to the practical results of using the machine, the drills are driven at a speed of 34 feet per minute at the cutting edges. A jet of soapsuds plays on each drill from an orifice $\frac{1}{32}$ in. in diameter, and at a pressure of 60 lbs. per square inch. A joint composed of two 1-inch plates, and having holes $1\frac{1}{8}$ in. in

these plates can be cut out at once. The machine is of such design that it can be placed with one of the horizontal bed plates (say A^1) parallel and close up to a wall of the boiler shop; and when the turning apparatus is being used, the vertical arm B^2 can be swivelled half way round on its square box E^2, and used for drilling and tapping the stay holes in marine boiler ends after they are put together; of course sufficient room must be left between bed plate A^2 and the wall of boiler shop parallel with it, to allow for reception of the boiler to be operated upon.

In Figs. 1694 and 1695 is represented a machine which is constructed for the drilling of shells of steam boilers, to effect which the boiler is set upon a table, round which are placed four standards, each carrying a drilling head, so that four

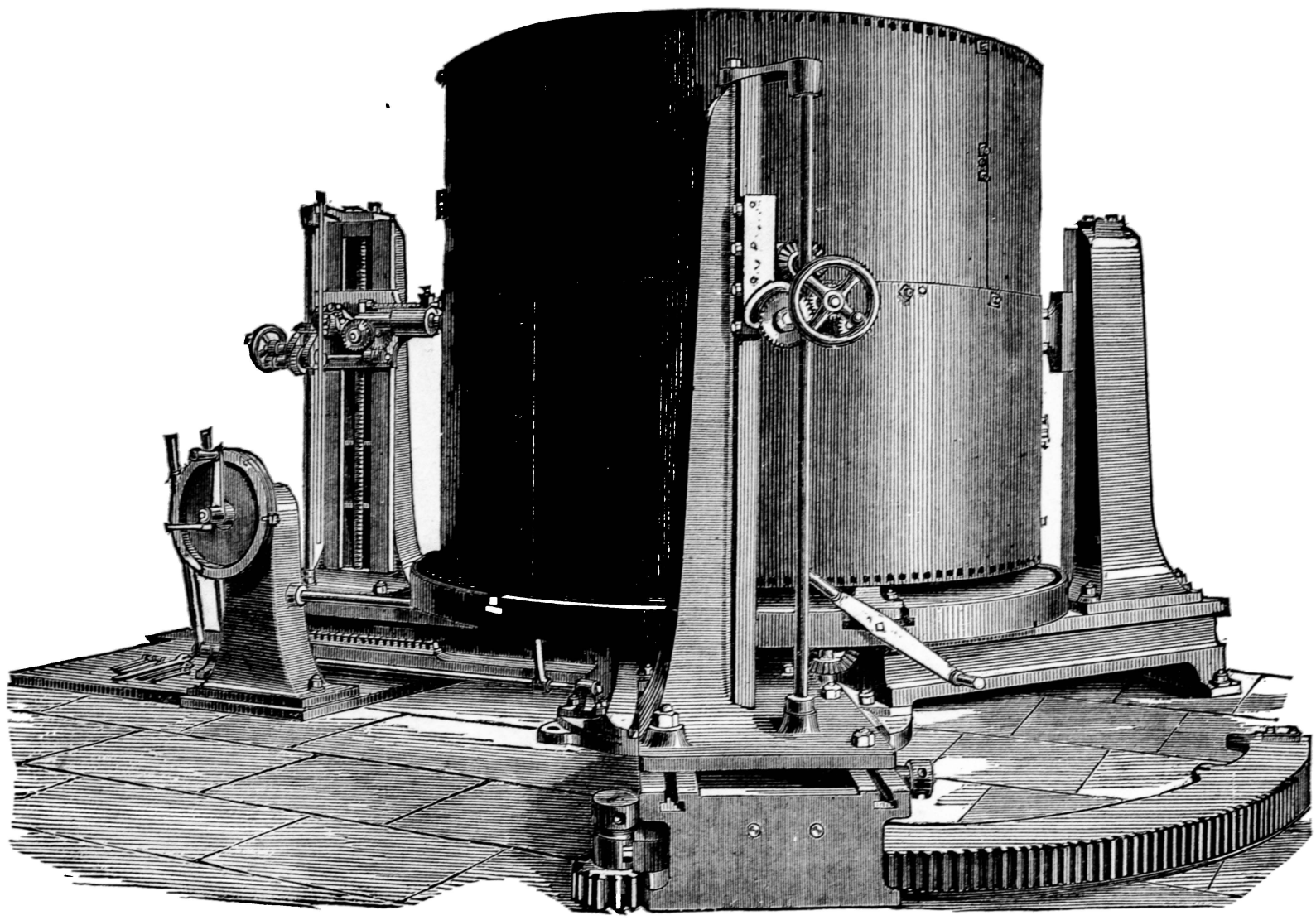

Fig. 1694.

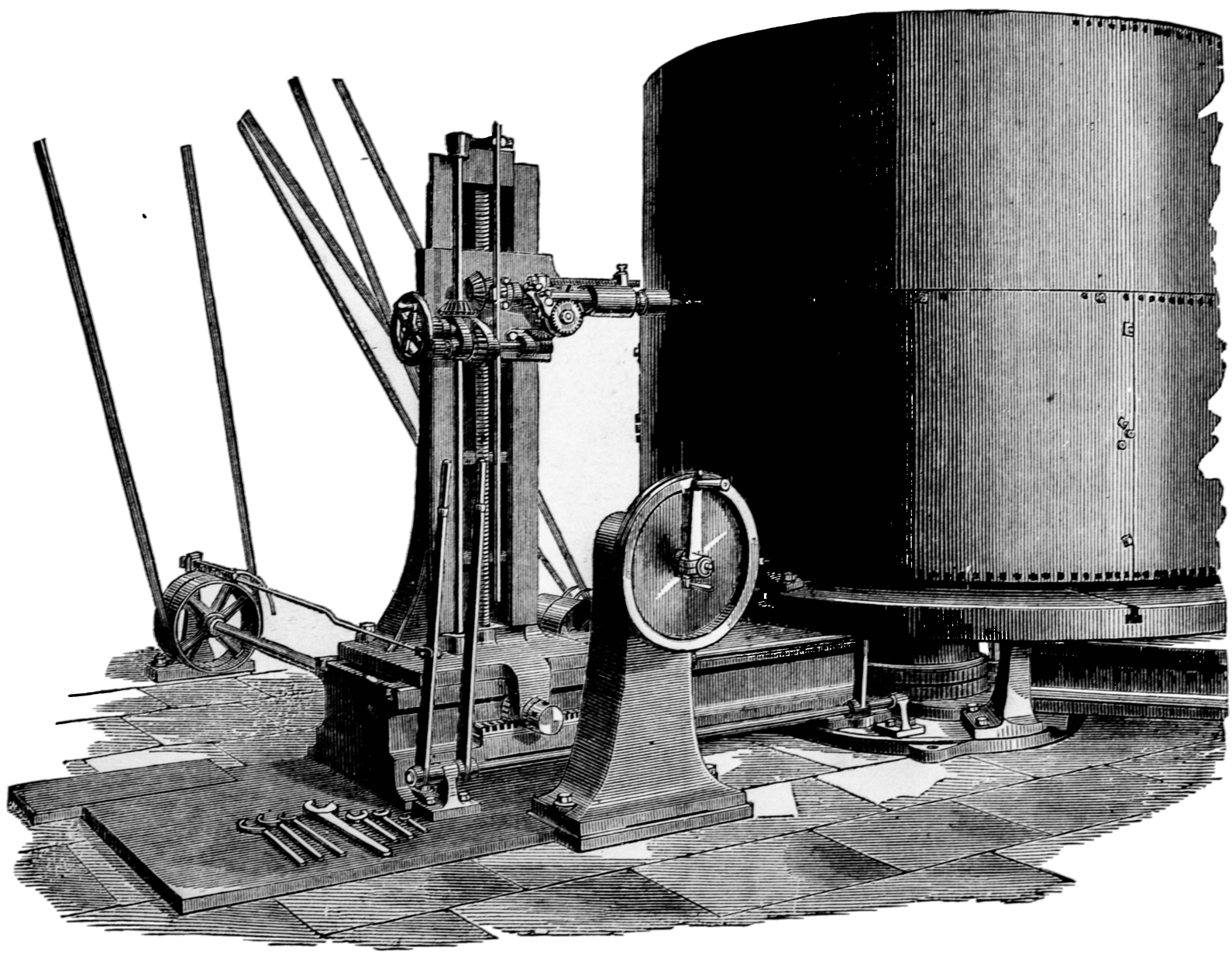

Fig. 1695.

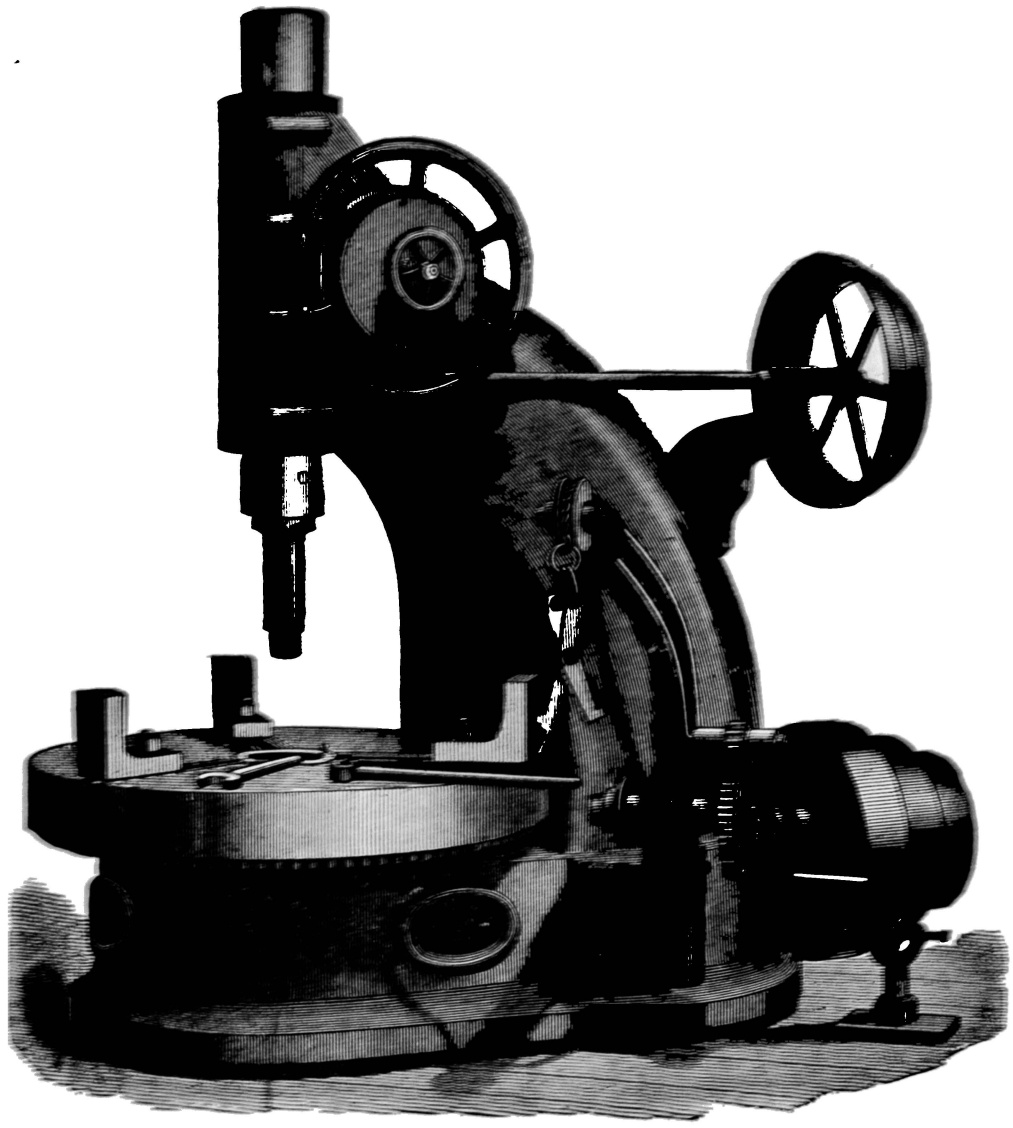

Fig. 1696.

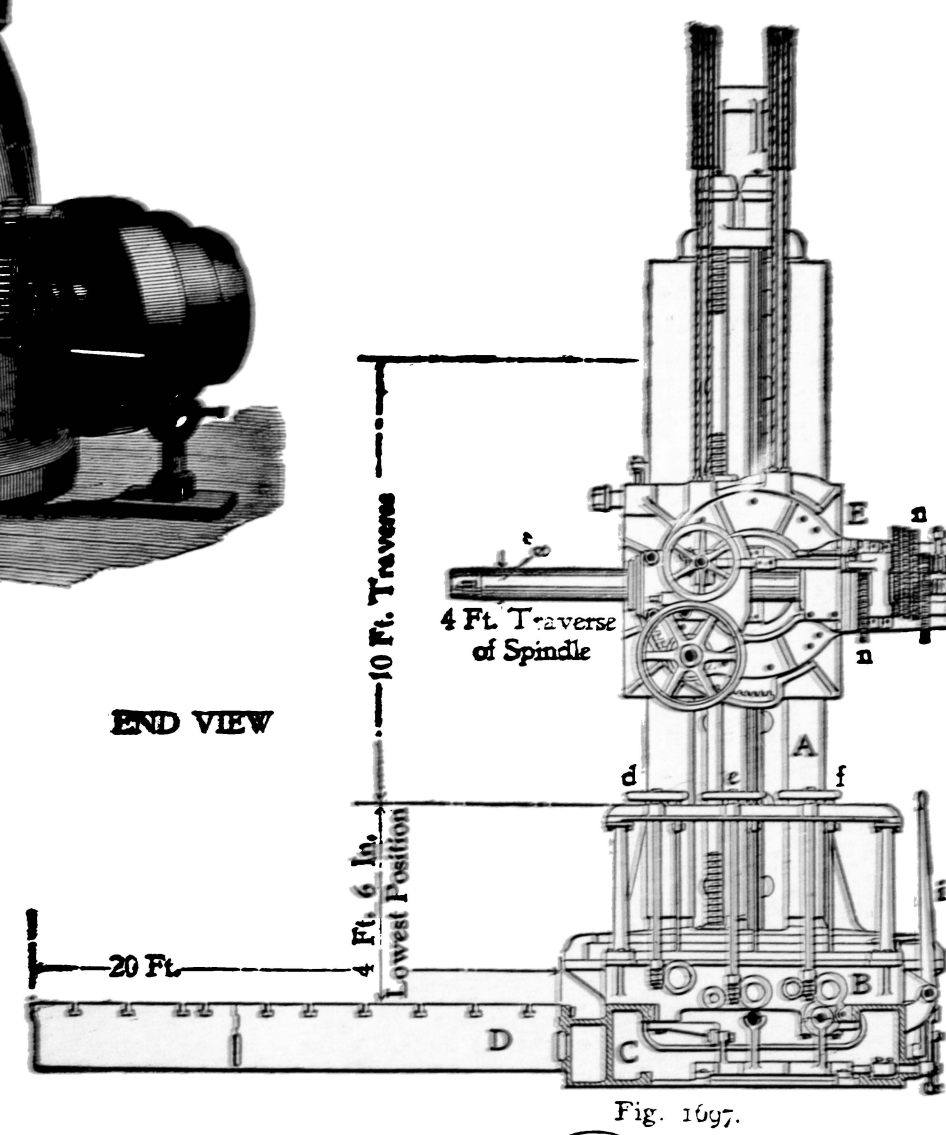

Fig. 1697.

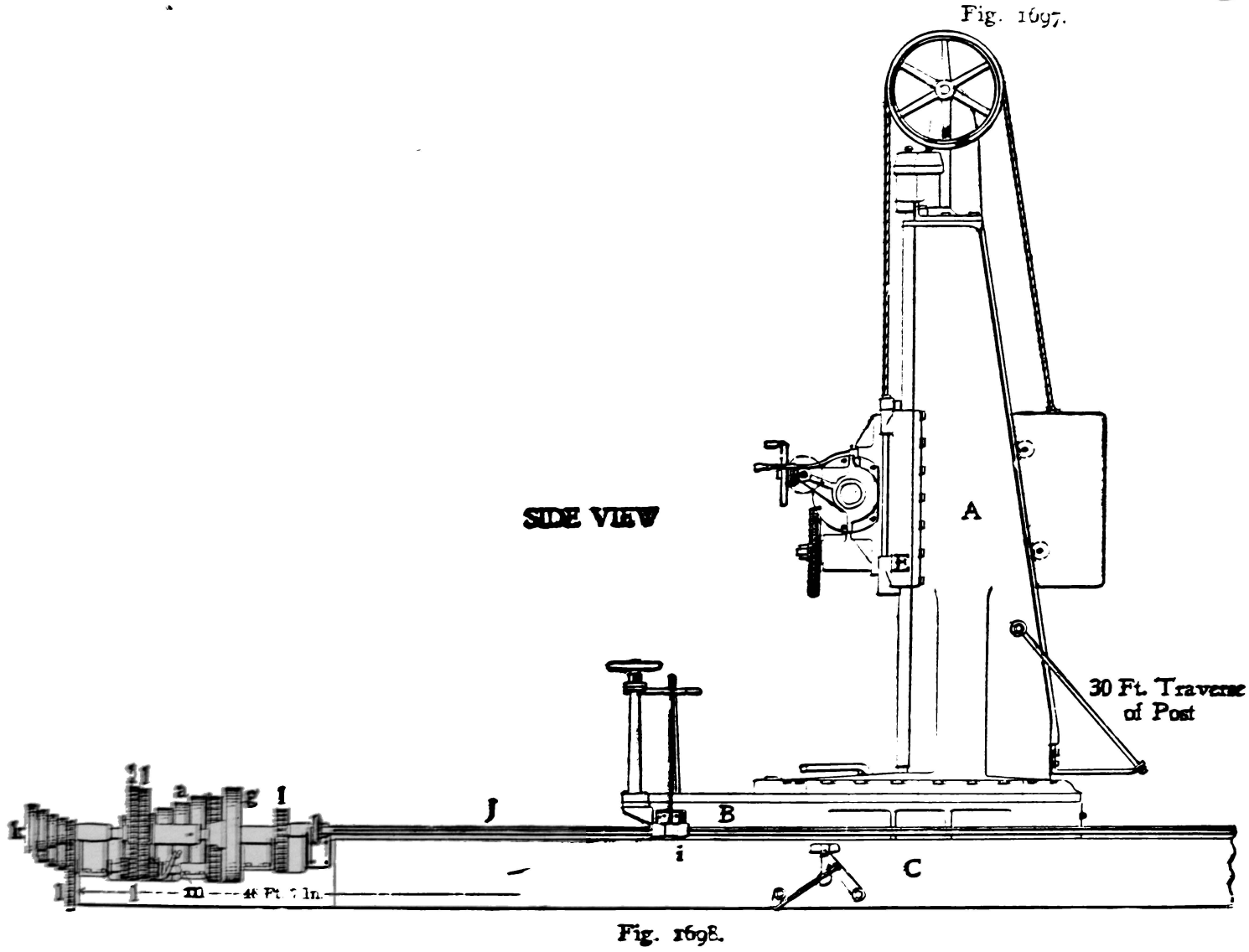

Fig. 1698.

holes may be drilled simultaneously, and is provided with a dividing motion that enables the table to be revolved a certain distance, corresponding to and determining the pitch of the rivet holes.

It is capable of drilling locker shells of any diameter between four and eight feet. The feed motion to each drill is driven from one source of power, but each drill is adjustable on its own account. The depth of feed is regulated by a patent detent lever which engages with the teeth of a ratchet wheel, till released therefrom by contact with the adjustable stop. The drill spindle is then instantly forced back by the spiral spring and the forward feed motion continues.

It is the duty of the attendant to turn his dividing apparatus handle the required distance for the next hole, directly the drills are withdrawn, the amount of clearance between the drill point and the boiler shell being such as to give him proper time for this purpose, but no more. Self-acting water jets to the drills, and reflectors to enable the operator to see each drill, will be provided, but were not in action at the time views of the machine were made.

With an ordinary boiler shell formed in three plates, the three drills work simultaneously, and the one movement of the dividing apparatus, of course, applies to all. If the object to be drilled be not divisible into multiples of three, any other divisions can be produced by the dividing gear, either one, two, or three drills being used, as the circumstances may permit. Two heads can be shifted round from the angle of 120°, at which they are shown, to positions diametrically opposite, as may be desired, and the third can be used or disused as wished.

Vertical gauge rods are provided, duly marked out to the various pitches that may be needed for the vertical rows of holes, and the movement of the drill spindle saddles is so simple and steady that accurate adjustment can be made without the least difficulty. In the same way when the drill would, in its natural course, come in contact with one of the bolts by which the plates are held together, the attendant can run all the drills downwards a couple of inches or so, then turn the dividing apparatus two pitches instead of one, and on raising the three drills again he can continue the circular row as before. The entire control of the machine is governed by the attention of one man to two levers and the one dividing handle, which are all conveniently placed for the purpose.

In Fig. 1696 is represented a machine for boring car wheels. The chuck is driven by a crown gear operated beneath by a pinion on the cone spindle. The feed motion for the boring bar is operated from the small cone shown on the cone spindle, there being three rates of automatic feed, which are communicated to the bar by a worm and worm-wheel operating a spindle carrying a pinion in gear with a rack on the back of a boring bar.

The worm-wheel is provided with a friction disk operated by the small hand-wheel shown, to start and stop the automatic feed, the large hand-wheel operating the rack spindle direct, and therefore giving a rapid hand-feed or quick return motion for the boring bar. The boring bar is counterbalanced by a weight within the frame. On the side of the frame is a small crane for handling the car wheels.

A UNIVERSAL BORING, DRILLING, AND MILLING MACHINE suitable for armor plate and similar work is illustrated in Figs. 1697 and 1698. It is designed and constructed by Bement, Miles & Co., of Philadelphia, Pa.*

It consists of a heavy column A, with a circular base, upon which it swivels by hand and power, resting upon a carriage B, which traverses 30 feet by hand and power, upon a bed C. At one side of the bed is a work table D, 20 feet wide by 31 feet long. Upon the face of the column a counterweighted saddle E traverses vertically 10 feet, by hand or power, carrying a steel spindle 8 inches in diameter, with 4 feet traverse by hand, or by variable feed motion.

The traverse of the column upon the bed, of the saddle upon the column, and the swiveling of the column horizontally upon its axis, are all arranged so as to be operated either rapidly by quick traverse gear, or slowly for feeding in any direction, and for fine adjustments by hand. The spindle can also swivel upon the saddle in a vertical plane. This combination makes the machine truly universal in every sense. The bed can be shortened or lengthened for more or less traverse horizontally; the column can be shortened or lengthened for more or less traverse vertically; the motions of the spindle can be increased or diminished, as required, and the dimensions of the work table can be adapted to suit the work. The functions of the machine are effected as follows:

The cone *a*, of five steps, is arranged with two changes of back gear, giving 15 speeds or, if required, 30 speeds by double shift on the countershaft. The cone and back gearing are arranged similarly to those of a lathe spindle, which is represented by the driving shaft. Their function is to revolve the spindle.

The arrangements for controlling the traversing and feeding motions of the machine are shown upon the plan view. A clutch engages the horizontal traverse gearing, and a hand wheel gives the close final adjustment horizontally. A clutch engages the vertical traverse, for which the hand wheel *c* gives the final adjustment. A third clutch engages the swivel motion of the column, for which the wheel *f* gives the hand adjustment. The clutch seen below *s*, reverses any or all of these motions.

The pulley *g* gives the power for actuating the traverse motions of the machine. They are controlled by the vertical hand lever *i*, seen at the right-hand side in end view. This lever, traversing with the carriage, operates the rock-shaft J, which runs the whole length of the machine. In one direction, the hand lever *i* applies the quick traverse motion to any of the traverses which are engaged; in the other direction, it applies the slow feeding motion for milling. The milling feeds are actuated by cones *k k* and gearing *l l l*, a change in the gearing being effected by the horizontal hand lever *m*, seen on plan.

The feed motions for drilling and boring are actuated by the gearing seen in the end view at *n n n*. The swiveling of the spindle in the vertical plane is arranged in this machine for hand motion only, as a power traverse would be of little use.

The operator, standing upon the platform of the carriage, can control and manipulate all the operations of the machine, except the speeds given by the cones and gearing.

The purposes to which this machine is to be applied are chiefly the machining of the edges of armor plate and the cutting of port-holes in ships' turrets. For this work, the three functions of drilling, boring, and milling are all required, and the machine has a complete complement of speeds and feeds suitable to all of these operations. The shapes of ships' armor are so diverse as to require the universal adjustments, although these have largely increased the complexity of the driving gearing, of which the plan and elevations give no adequate conception, as the gears involved in the performance of these functions are partly out of sight, being indicated only by pitch circles. The machine is universal in an additional sense over that suggested by the fact that the spindle is adjustable in inclination in both the horizontal and vertical planes. This feature is only indicated in the drawings, as certain fixtures have to be applied for this purpose which differ with the different jobs, and are, consequently, to be fitted to the machine by its owners. This feature is indicated by the short stud seen projecting from the upper left-hand corner of the post saddle in the end elevation. The purpose of this pin is for connection to a radius link, which is to be swiveled from a corresponding pin attached to a stationary support, at a point depending upon the work to be done. The vertical feed motion of the post saddle may be disengaged, and when so disengaged—the saddle being hung from such a radius link—it is obvious that when the post is fed horizontally upon the bed, the spindle will traverse the arc of a circle, whose centre is the stationary pin of the radius link. The purpose of this provision is to enable the machine to mill a rabbeted joint upon the circular bottom of ships' turrets.

The magnitude of the machine will be understood from the dimensions already given, to which may be added the fact that the centre of the balance sheaves on the top of the columns is 20 feet above the surface of the floor plate. The entire length of the machine over all is 51½ feet, and the gross weight is 240,000 pounds. An additional means of estimating the size of the machine lies in the fact that the hand wheels upon the operating platform are about waist high for convenient manipulation.

* From the *American Machinist*.

Chapter XIX.—Drills and Cutters for Drilling Machines.

Drilling Jigs, Guides, or Fixtures.—When a large number of pieces are to be drilled alike, as in the case when work is done to special gauges, special chucking devices called jigs, or fixtures, are employed to guide the drill, and insure that the holes shall be pierced accurately in the required location, and test pieces or gauges are provided to test the work from time to time to insure that errors have not arisen by reason of the wear of these drill-guiding devices.

Suppose, for example, that we have a link, such as in Fig. 1699, and that we require to have the holes throughout a large number of them of equal diameter at each end and the same distance apart, and if we could prevent the wear of the tools, and

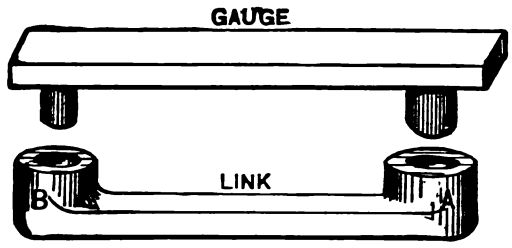

Fig. 1699.

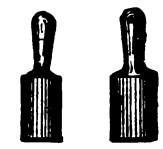

Fig. 1700.

so continue to produce any number of links all exactly alike, we could provide a simple test gauge, such as shown in the figure, making it pass the proper distance apart, and of a diameter to fit the holes; but as we cannot prevent wear to the tools we must fix a limit to which such wear may be permitted to occur, and having reached that point they must be restored and corrected. We must at the same time possess means of testing in what direction the wear has induced error. Let it be assumed that the bore at A should be $\frac{1}{2}$ inch and that at B $\frac{3}{8}$ inch in diameter, that their distance from centre is to be, say, six inches, and that either bore may vary in diameter to the amount of $\frac{1}{1000}$ inch, while the distance from centre to centre of the bores may also vary $\frac{1}{1000}$ inch. Now let it be noted that if one piece be made $\frac{1}{2000}$ inch too short, and another $\frac{1}{2000}$ inch too long we have reached the extent of the limit, there being $\frac{1}{1000}$ inch difference between them, although neither piece varies more than $\frac{1}{2000}$ inch from the standard. Similarly in the bore diameters, if the bore, say at A, is $\frac{1}{2000}$ inch too large in one piece and $\frac{1}{2000}$ too small in another, there is a difference of $\frac{1}{1000}$ between them, although each varies

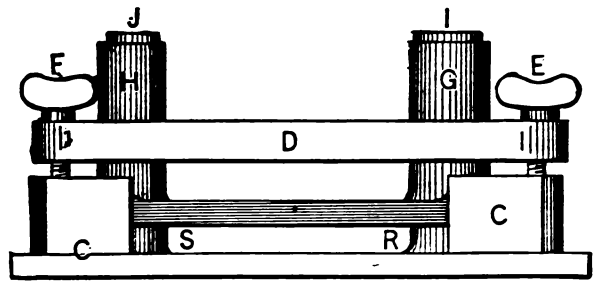

Fig. 1701.

only the $\frac{1}{2000}$ inch from the standard. In making test gauges for the holes, therefore, we must consider in what direction the tool will wear; thus, suppose that the finishing reamer for the holes is made when new to the standard diameter, and it can only wear smaller, hence a plug gauge of the standard diameter and $\frac{1}{1000}$ inch smaller would serve thus, as so long as the smaller one will go in the limit of wear is not reached; when it will not go in sufficiently easily the reamer must be restored to fit the standard gauge. On the other hand, the reamer when new may be made $\frac{1}{1000}$ inch above the standard size and restored when it has worn down to the standard size. In this case the bore diameter is still within the limit as long as the small gauge will enter; but when it fits too tight the reamer must be restored to the large plug gauge, the forms of these gauges being shown in Fig. 1700.

In Figs. 1701 and 1702 we have a jig or fixture for holding the link during the drilling process. It consists of two parts, C and D, between which the link is held by the screws E and F. The two hubs, G and H, are provided with hardened steel bushes, I and J, which are pierced with holes to receive and guide the drilling tool or reamer, and it is evident that in time the bore of these bushes will wear, and if they wear on one side more than on

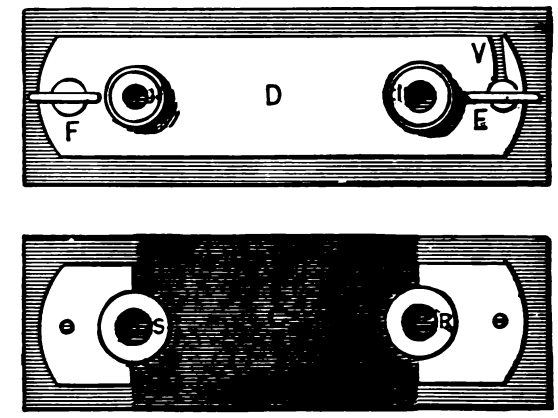

Fig. 1702.

another they may wear longer or shorter between the centres or axis; hence we require gauges such as shown in Fig. 1703, one being longer between centres and the other shorter, in each case to the amount of the prescribed limit. In this case, so long as the holes are kept within the prescribed limit of diameter, the distance apart of the two holes will be within the limit so long as neither of the limit gauges will enter; and when they will enter the bushes I J must be restored.

It is to be remarked, however, that the variation in the diameter of the holes affects these standards, since if the holes are made sufficiently large either gauge would enter, although the axis of the holes and of the pins on the gauge might be the proper distance apart; hence the gauging for length depends to some degree upon the degree of accuracy in gauging for diameter.

Referring now to the construction of the jig, or fixture for

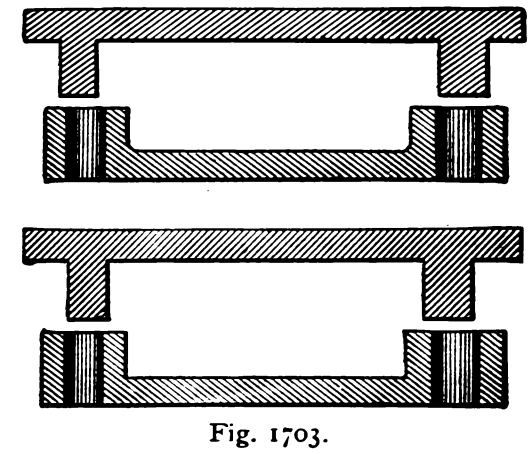

Fig. 1703.

drilling the link shown in Figs. 1701 and 1702: the base piece is provided with two short hubs, R and S, upon which the link is to sit, and it is obvious that these hubs must be faced off true with the bottom face of the base, while the link must also be faced so that it will be level, and not be bent or sprung when clamped by the screws E F. It is obvious that the hubs R and S may be omitted, and the link be flat on the base plate; but this would not be apt to hold the link so steadily, and greater care would be required to keep the surface clean. It is also obvious that in the form of jig shown there is a tendency of the screws E and F to

bend the piece D; but in the case of small pieces, as, say, not exceeding 8 inches long, piece D may be made strong enough to resist the screw pressure without bending. If, however, the link were, say, 18 inches long, it would be preferable to have projections in place of the hubs R,S, and to let these projections extend some distance along each end of the link, using four holding screws, and clamping the piece D on the inside of the hubs H G. To

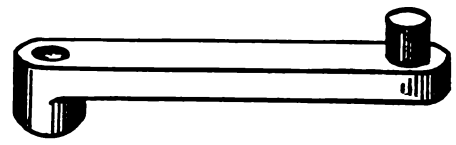

Fig. 1704.

facilitate the rapid insertion and removal of the link into and from the jig cap-piece, D is pivoted on screw F, while a slot V is cut at the other end, so that when the two screws E,F are loosened, the cap-piece D may be swung out of the way without entirely removing it.

In Fig. 1704 we have a link in which a hole is to be bored at one end at a certain distance from a pin at the other, and the fixture, or jig for drilling, is shown in the sectional view, Fig.

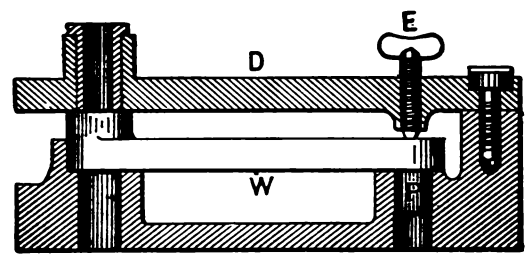

Fig. 1705.

1705, the side view, Fig. 1706, and the top view, Fig. 1707. It is obvious that the pin P and the face W of the link must be made true, and that a hardened steel bush may be placed in the hub to receive the pin P. The screw E binds one end of the cap D, and eye-bolts with thumb-nuts F bind the other, these bolts being pivoted at their lower ends, and passing through slots in D, so that as soon as nuts F are loosened, their bolts may be swung out

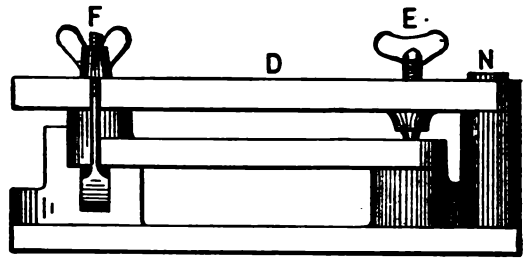

Fig. 1706.

clear of the cap, which may be swung on one side from the pin N as a pivot.

In Fig. 1708 we have a piece containing three holes, which are to be drilled in a certain position with regard to each other, and with regard to the face A. This brings us to the consideration that in all cases the work must be chucked or held true by the faces to which it is necessary that the holes must be true, and as

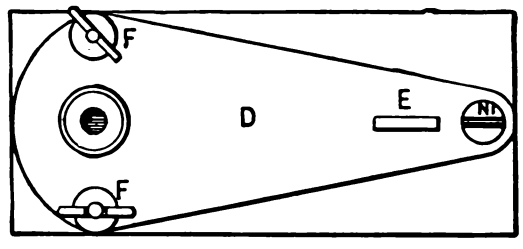

Fig. 1707.

in this case it is the face A, the jig must be made to hold the piece true by A, the construction being as in Fig. 1709, which represents a top view, and a sectional side view. The upper plate D carries three hardened steel bushes, A, B, and C, to receive the drilling tools, and thus determine that the holes shall be drilled at their proper positions with relation to each other, and is provided with a face N, against which the face (A, Fig. 1708) may be secured by the screw H, and thus determine the positions of the holes with regard to that face. At E, F, and G are eye-bolts for clamping the work between the cap and the base plate, which is made large so that it may lie steadily on the table of the drilling machine. When the nuts E, F, and G and the screw H are loosened the cap D may be lifted off and the work removed.

If the holes are required to be made very exact in their positions with relation to one edge, as well as to the face A of the work, two screws K would be required, one binding the cap against the

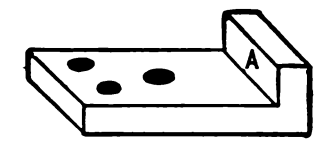

Fig. 1708.

lug M of the base, and the other binding the edge of the work against the same lug.

The usefulness of jigs, or fixtures, is mainly confined to small work in which a great many duplicate pieces are to be made, and their designing calls for a great deal of close study and ingenuity. They can obviously be applied to all kinds of small work, and as a general principle the holes and pins of the work are taken as the prime points from which the work is to be held.

Drilling fixtures may, however, be applied with great advantage to work of considerable size in cases where a number of duplicate

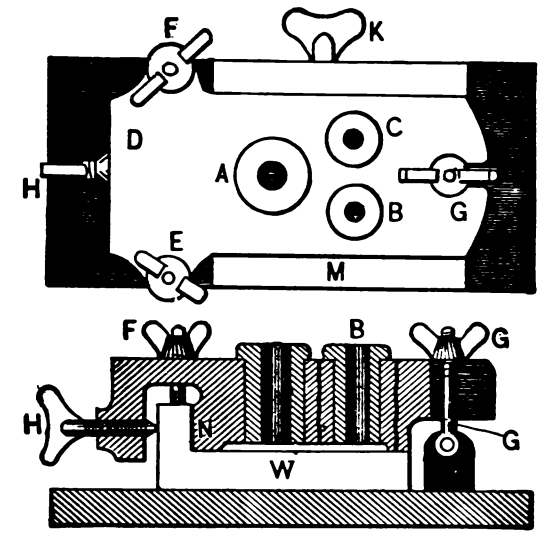

Fig. 1709.

parts are to be made, an example of this kind being given in the fixtures for drilling the bolt holes, &c., in locomotive cylinders.

For drilling the cylinder covers and the tapping holes in the cylinder, the following device or fixture is employed: The flanges of the cylinder covers are turned all of one diameter, and a ring is made, the inside diameter of which is, say, an inch smaller than the bore of the cylinder; and its outside diameter is, say, an inch larger than the diameter of the cover. On the outside of the ring is a projecting flange which fits on the cover, as in Fig. 1710, *a* being the cylinder cover, and *b b* a section of the ring, which is

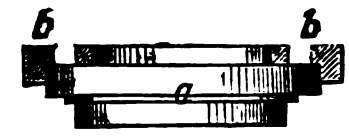

Fig. 1710

provided with holes, the positions in the ring of which correspond with the required positions of the holes in the cover and cylinder; the diameter of these holes (in the ring, or template, as it is termed) is at least one quarter inch larger than the clearing holes in the cylinder are required to be. Into the holes of the template are fitted two bushes, one having in its centre a hole of the size necessary for the tapping drill, the other a hole the size of the clearing drill; both these bushes are provided with a handle by which to lift them in and out of the template, as shown in Fig. 1711, and both are hardened to prevent the drill cutting them, or the borings of the drill from gradually wearing their holes larger. The operation is to place the cover on the cylinder and

the template upon the cover, and to clamp them together, taking care that both cover and template are in their proper positions, the latter having a flat place or deep line across a segment of its circumference, which is placed in line with the part cut away on the inside of the cover to give free ingress to the steam, and the cover being placed in the cylinder so that the part so cut away will be opposite to the port in the cylinder, by which means the holes in the covers will all stand in the same relative position to any definite part of the cylinder, as, say, to the top or bottom, or to the steam port, which is sometimes of great importance (so as

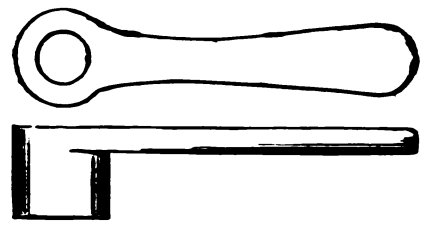

Fig. 1711.

to enable the wrench to be applied to some particular nut, and prevent the latter from coming into contact with a projecting part of the frame or other obstacle): the positions of the cylinder, cover, template, and bush, when placed as described, being such as shown in Fig. 1712, *a a* being the cylinder, B the steam port, C the cylinder cover, D the template, and E the bush placed in position. The bush E having a hole in it of the size of the clearance hole, is the one first used, the drill (the clearance size) is passed through the bush, which guides it while it drills through the cover, and the point cuts a countersink in the cylinder face.

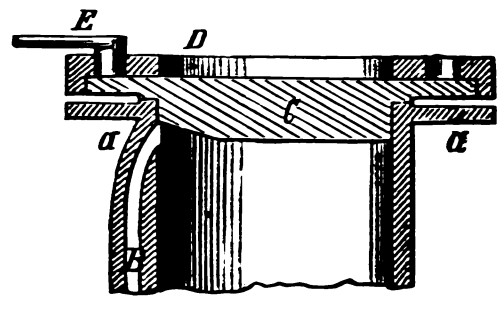

Fig. 1712.

The clearing holes are drilled all round the cover, and the bush, having the tapping size hole in it, is then brought into requisition, the tapping drill being placed in the drilling machine, and the tapping holes drilled in the cylinder flange, the bush serving as a guide to the drill, as shown in Fig. 1712, thus causing the holes in the cover and those in the cylinder to be quite true with each other. A similar template and bush is provided for drilling the holes in the steam chest face on the cylinder, and in the steam chest itself. While, however, the cylinder is in position to have

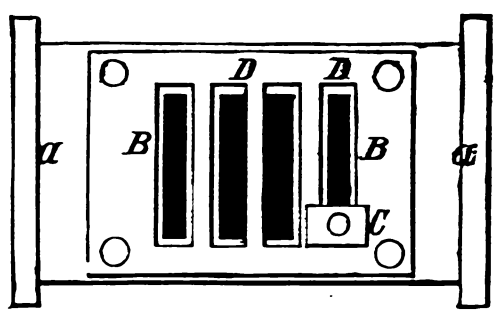

Fig. 1713

the holes for the steam chest studs drilled, the cylinder ports may be cut as follows :—

The holes in the steam chest face of the cylinder being drilled and tapped, a false face or plate is bolted thereon, which plate is provided with false ports or slots, about three-eighths of an inch wider and three-fourths of an inch longer than the finished width and length of the steam ports in the cylinder (which excess in width and length is to allow for the thickness of the die). Into these false ports or slots is fitted a die to slide (a good fit) from end to end of the slots. Through this die is a hole, the diameter of which is that of the required finished width of the steam ports of the cylinder; the whole appliance, when in position to commence the operation of cutting out the cylinder ports, being as illustrated in Fig. 1713, *a a* being the cylinder, B B the false plate, C the sliding die, and D D the slots or false ports into which the die C fits. Into the hole of the die C is fitted a reamer, with cutting edges on its end face and running about an inch up its sides, terminating in the plain round parallel body of the reamer, whose length is rather more than the depth of the die C. The operation is to place the reamer into the drilling machine, taking care that it runs true. Place the die in one end of the port, as shown in Fig. 1713, and then wind the reamer down through the die so that it will cut its way through the port of the cylinder at one end; the spindle driving the drill is then wound along. The reamer thus carries the die with it, the slot in the false face acting as a guide to the die.

In the case of the exhaust port, only one side is cut out at a time. It is obvious that, in order to perform the above operation,

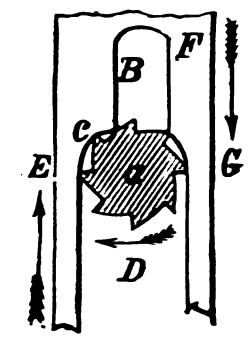

Fig. 1714.

the drilling machine must either have a sliding head or a sliding table, the sliding head being preferable.

The end of the slot at which the die must be placed when the reamer is wound down through the die and cylinder port, that is to say, the end of the port at which the operation of cutting it must be commenced, depends solely on which side of the port in the cylinder requires most metal to be cut off, since the reamer, or cutter, as it may be more properly termed, must cut underneath the heaviest cut, so that the heaviest cut will be forcing the reamer back, as shown in Fig. 1714, *a* being a sectional view of the cutter, B the hole cast in the cylinder for the port, *c* the side of the port having the most cut taken off, D the direction in which the cutter *a* revolves, and the arrow E the direction in which the cutter *a* is travelling up to its cut. If the side F of the port were the one requiring the most to be cut off, the cutter *a* would require to commence at the end F, and to then travel in the direction of the arrow G. The reason for the necessity of observing these

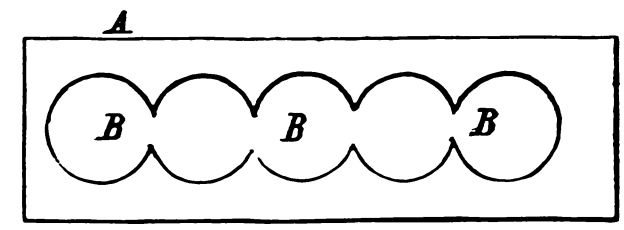

Fig. 1715.

conditions, as to the depth of cut and direction of cutter travel, is that the pressure of the cut upon the reamer is in a direction to force the reamer forward and into its cut on one side, and backward and away from its cut on the other side, the side having the most cut exerting the most pressure. If, therefore, the cutter is fed in such a direction that this pressure is the one tending to force the cutter forward, the cutter will spring forward a trifle, the teeth of the cutter taking, in consequence, a deep cut, and, springing more as the cut deepens, terminate in a pressure which breaks the teeth out of the cutter.

If, however, the side exerting the most pressure upon the reamer is always made the one forcing the cutter back, as shown in Fig. 1714, by reason of the direction in which the cutter is travelled to its cut, the reamer, in springing away from the undue pressure, will also spring away from its cut, and will not, therefore, rip in or break, as in the former case.

In cutting out the exhaust port, only one side, in consequence of its extreme width, may be cut at one operation; hence there

are two of the slots D, Fig. 1713, provided in the false plate or template for the exhaust port. The cutter *a* must, in this case, perform its cut so that the pressure of the cut is in a direction to force the cutter backwards from its cut. The time required to cut out the ports of an ordinary locomotive cylinder, by the above appliance, is thirty minutes, the operation making them as true, parallel, and square as can possibly be desired.

DRILLS AND CUTTERS FOR DRILLING MACHINES.—In the drilling machine, as in the lathe, the twist drill is the best tool that can be used for all ordinary work, since it produces the best work with the least skill, and is the cheapest in the end. As, however, the twist drill has been fully discussed with reference to its use upon lathe work, it is unnecessary to refer to it again more than to say that it possesses even greater advantages when used in the drilling machine than it does when used in the lathe; because as the drill stands vertical the flat drill will not relieve itself of the cuttings, and in deep holes must be occasionally withdrawn from the hole in order to permit the cuttings to be extracted, an operation that often consumes more time than is required for the cutting duty. Furthermore, as flat drills rarely run true they place excessive wear upon the drilling machine spindle, causing it to wear loose in its bearings, which is a great detriment to the machine.

Fig. 1715 represents a piece of work that can be readily drilled with a twist drill but not with a flat one, such work being very advantageous in cutting out keyways. All that is necessary is to drill the three holes B first, and if the drill runs true and the work is properly held and the drill fed slowly while run at a quick speed the operation may be readily performed.

The speeds and feeds for twist drills are given in connection with the use of the drill in the lathe, but it may be remarked here that more duty may be obtained by hand than by automatically feeding a drill, because in hand feeding the resistance of the feed motion indicates the amount of pressure on the drill, and the feed may be increased when the conditions (such as soft metal) permits, and reduced for hard spots or places, thus preserving the drill. Furthermore, the dulling of the drill edges becomes more plainly perceptible under hand feeding.

The commercial sizes of both taper and straight shank twist drills are as follows :—

Diameter.	Length.	Diameter.	Length.	Diameter.	Length.	Diameter.	Length.
1/4	6 1/8	25/32	9 7/8	1 5/16	14 1/4	1 27/32	16 3/8
1/4	6 1/4	13/16	10	1 11/32	14 3/8	1 7/8	16 1/2
5/16	6 3/8	27/32	10 1/4	1 3/8	14 1/2	1 29/32	16 1/2
11/32	6 1/2	7/8	10 3/8	1 13/32	14 5/8	1 15/16	16 1/2
3/8	6 3/4	29/32	10 1/2	1 7/16	14 3/4	1 31/32	16 1/2
13/32	7	15/16	10 5/8	1 15/32	14 7/8	2	16 1/2
7/16	7 1/4	31/32	10 3/4	1 1/2	15	2 1/32	16 1/2
15/32	7 1/2	1	11	1 17/32	15 1/8	2 1/16	17
1/2	7 3/4	1 1/32	11 1/8	1 9/16	15 1/4	2 1/8	17
17/32	8	1 1/16	11 1/4	1 19/32	15 3/8	2 3/16	17
9/16	8 1/4	1 3/32	11 3/8	1 5/8	15 1/2	2 1/4	17 1/2
19/32	8 1/2	1 1/8	11 1/2	1 21/32	15 5/8	2 5/16	17 1/2
5/8	8 3/4	1 5/32	11 5/8	1 11/16	15 3/4	2 3/8	18
21/32	9	1 3/16	12	1 23/32	15 7/8	2 7/16	18 1/2
11/16	8 1/4	1 7/32	12 1/8	1 3/4	16	2 1/2	19
23/32	9 1/8	1 1/4	12 1/4	1 25/32	16 1/8		
3/4	9 1/4	1 9/32	14 3/8	1 13/16	16 1/4		

Twist drills are also made to the Stubs wire gauge as follows :—

Numbers by gauge.	Length.	Numbers by gauge.	Length.
1 to 5	4	31 to 35	2 5/8
6 „ 10	3 11/16	36 „ 40	2 7/16
11 „ 15	3 1/2	41 „ 45	2 1/4
16 „ 20	3 1/4	46 „ 50	2 1/16
21 „ 25	3 1/16	51 „ 60	1 3/4
26 „ 30	2 13/16	61 „ 70	1 1/2

Fig. 1716 represents the flat drill, which has three cutting edges, A, B, and C. The only advantages possessed by the flat drill are that it will stand rougher usage than the twist drill, and may be fed faster, while it can be more easily made. Furthermore, when the work is unusually hard the flat drill can be conveniently shaped and tempered to suit the conditions.

The drill is flattened out and tapered thinnest at the point C. The side edges that form the diameter of the drill are for rough work given clearance, but for finer work are made nearly cylindrical, as in the figure.

The flattening serves two purposes: first, it reduces the point of the drill down to its proper thinness, enabling it to enter the

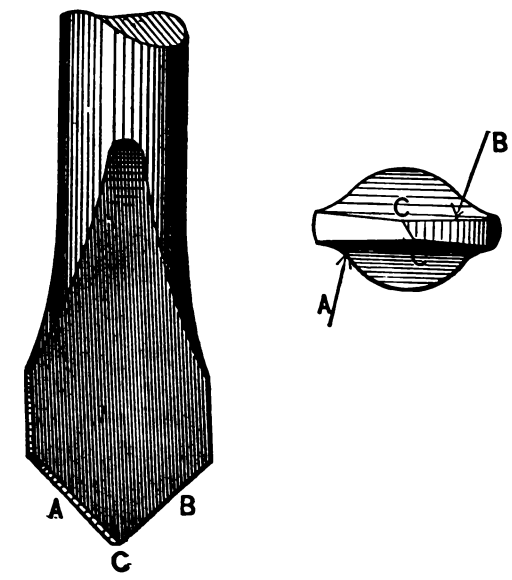

Fig. 1716.

metal of the work easily, and secondly, it enables the cuttings to pass upward and find egress at the top of the hole being drilled.

The cutting edges are formed by grinding the end facets at an angle as shown, and this angle varies from 5° for drilling hard metal, such as steel, to 20° for soft metal, such as brass or copper.

The angle of one cutting edge to the other varies from 45° for steel to about 35° or 40° for soft metals. The object of these two variations of angles is that in hard metal the strain and abrasion is greatest and the cutting edge is stronger with the lesser degree of angle, while in drilling the softer metals the strain being less the cutting edge need not be so strong and the angles may be made more acute, which enables the drill to enter the metal more easily. The most imperfect cutting edge in a drill is that running diagonally across the point, as denoted by A in Fig. 1717, because it is less acute than the other cutting edges, but this becomes more acute and, therefore, more effective, as the angles of the facets forming it are increased as denoted by the dotted lines in

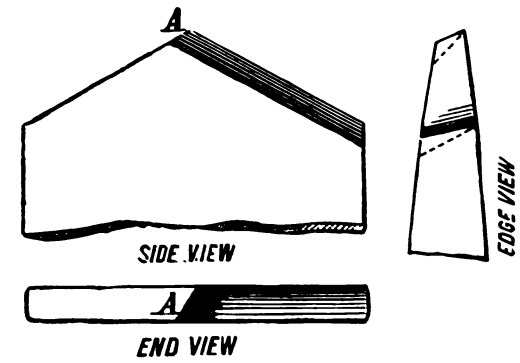

Fig. 1717.

the figure. It is obvious, however, that the more acute these angles the weaker the cutting edge, hence an angle of about 5° is that usually employed.

It is an advantage to make the cutting edge at A, Fig. 1717, as short as possible, which may be done by keeping the drill point thin; but if too thin it will be apt either to break or to operate in jumps (especially upon brass), drilling a hole that is a polygon instead of a true circle.

The cutting edges should not only stand at an equal degree of angle to the axial line of the drill, but should be of equal lengths, so that the point of the drill will be in line with the axial line of the drill. If the drill runs true the point will then be in the axial line of rotation, and the diameter of hole drilled will be equal to the diameter of the drill.

If, however, one cutting edge is longer than the other the hole drilled will be larger than is due to the diameter of the drill.

Suppose, for example, the drill to be ground as in Fig. 1718, the cutting edge F being the longest and at the least angle, then the point G of the drill, when clear of the work, will naturally revolve in a circle around the axial line H of the drill's rotation. But when the drilling begins, the point of the drill meets the metal first and naturally endeavours to become the centre of rotation, drilling a straight conical recess, the work moving around with the point of the drill. If the work is prevented from moving, either

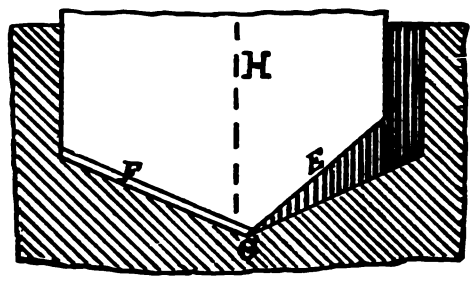

Fig. 1718.

the drill will spring or bend, the point of the drill remaining (at first) the centre of rotation at that end of the drill, or else the recess cut by the drill will be as in the figure, and the hole will be larger in diameter than the drill.

If, however, the drill is ground as shown in Fig. 1719, the edge E being nearest to a right angle to the axial line H of the drill, the drilling will be performed as shown in the figure, the edge E cutting the cone L, the edge F serving simply to enlarge the hole drilled by E. Here, again, if the work is held so that it cannot move, the point of the drill will revolve in a circle, and in either

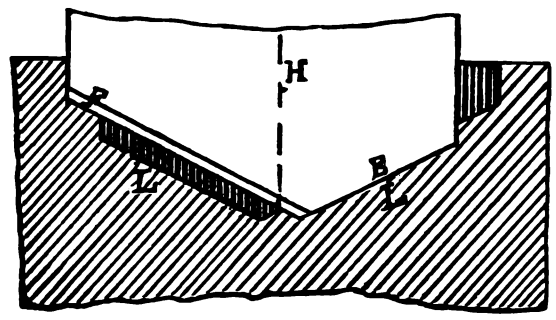

Fig. 1719.

case, so soon as the point of the drill emerges the diameter of the hole drilled will decrease, the finished hole being conical as shown in Fig. 1720 at A.

It may be remarked that the eye of the workman is (for rough work, such as tapping or clearing holes) sufficient guide to enable the grinding of the drill true enough to partly avoid the conditions shown in these two figures (in which the errors are magnified for clearness of illustration), because when the want of truth is less in amount than the thickness of the drill point, the centre of motion of the drill point when the drill has entered the work to its full

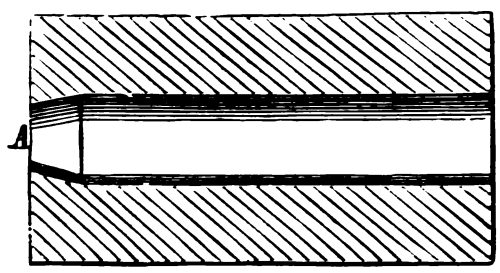

Fig. 1720.

diameter becomes neither at the point of the drill nor in the centre of its diameter, but intermediate between the two.

Thus, in Fig. 1721, A is the centre of the diameter of the drill, but the cutting edge C being shorter than D throws the point of the drill towards E, hence the extra pressure of D on the incline of the recess it cuts, over the like pressure exerted by C tends to throw the centre of rotation towards E, the natural endeavor of the drill point to press into the centre of the recess acting in the same direction. This is in part resisted by the strength of the drill, hence the centre of rotation is intermediate as at B in figure. The dotted circle is drawn from the axial line of the drill as a centre, while the full circle is drawn from B as a centre. The result of this would be that the point of the drill would perform more duty than is due to its thickness, and the recess cut would have a flat place at the bottom, as shown in Fig. 1722 at O. This, from the want of keenness of the cutting edge running diagonally across the drill point, would cause the drill to cut badly and require more power to drive and feed.

The edges at the flat end of the drill, as at A, A in Fig. 1723,

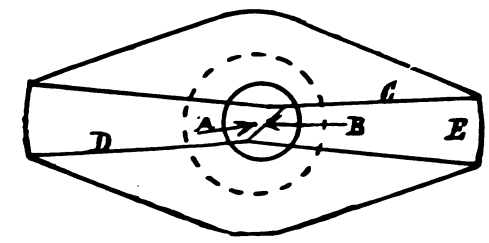

Fig. 1721.

should have a little clearance back from the cutting edge though they may be left the full circle as at A, A, but in any event they should not have clearance sufficient to form them as at B, B, Fig. 1723, because in that case the side edges C, C would cut the sides of the hole. In large drills, especially, it is necessary that the edges have but little clearance, and that the form of the clearance be as shown in Fig. 1044, with reference to twist drills. When no edge clearance whatever is given the edges act to a certain extent as guides to the drill, but if the drill is not ground quite true this

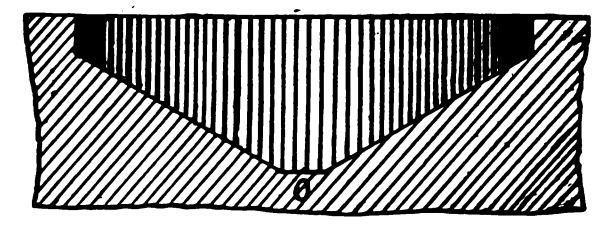

Fig. 1722.

induces a great deal of friction between the edges of the drill and the side of the hole.

In any case of improper grinding the power required to drive the drill will be increased, because of the improper friction induced between the sides of the drill and the walls of the hole.

For use on steel, wrought iron, and cast iron the lip drill shown in Fig. 1724 is a very efficient tool. It is similar to the flat drill but has its cutting edge bent forward. It possesses the keenness of the twist drill and the strength of the flat drill, but as in the case of all drills whose diameters are restored by forging and hand grinding, it is suitable for the rougher classes of work only, and requires great care in order to have it run true and keep both

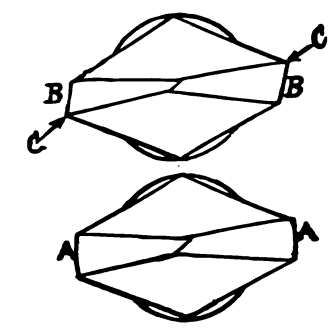

Fig. 1723.

cutting edges in action. It is sometimes attempted to give a greater cutting angle to a flat drill by grinding a recess in the front face, as at A in Fig. 1725, but this is a poor expedient.

Fig. 1726 represents what is known as the tit drill. It is employed to flatten the bottoms of holes, and has a tit T which serves to steady it. The edges A, B of this drill may be turned true and left without clearance, which will also serve to steady the drill. The tit T should be tapered towards the point, as shown, which will enable it to feed more easily and cut more freely. The speed of the drill must be as slow again as for the ordinary flat drill, and not more than one-third as fast as the twist drill.

To enable a drill to start a hole in the intended location the

centre-punch recess in the centre of that location should be large enough in diameter at the top to admit the point of the drill, that is to say, the recess should not be less in diameter at the top than the thickness of the drill point.

If the drill does not enter true the alteration is effected as shown in Fig. 1727, in which A represents the work, B a circle of the size of the hole to be drilled, and C the recess cut by the drill, while D is a recess cut with a round-nosed chisel, which recess will cause the drill to run over in that direction.

It is a good plan when the hole requires to be very correctly located to strike two circles, as shown in Fig. 1728, and to define

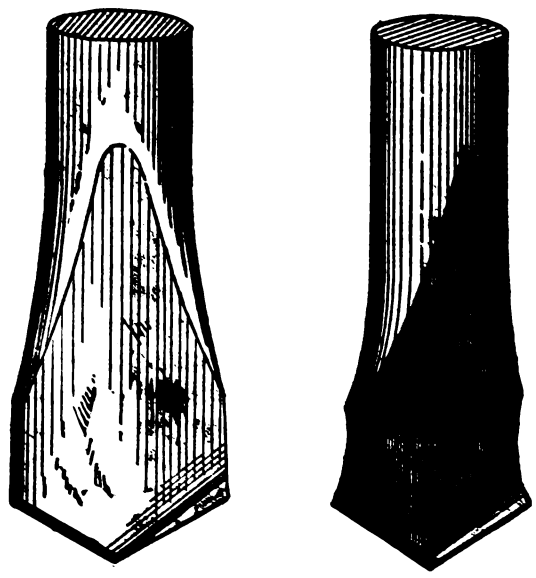

Fig. 1724.

them with centre-punch marks so that the cuttings and oil shall not erase them, as is apt to be the case with lines only. The outer circle is of the size of hole to be drilled, the inner one serves merely as a guide to true the drilling by.

If the work is to be clamped to the work table an alteration in the location of the recess cut by the drill point may be made by moving the work. In this case the point of the drill may be fed up so as to enter into and press against the centre-punch mark made in the centre of the location of the hole to be drilled, which, if the drill runs true will set the work true enough to clamp it by. The alteration to the recess cut by the drill when first starting to

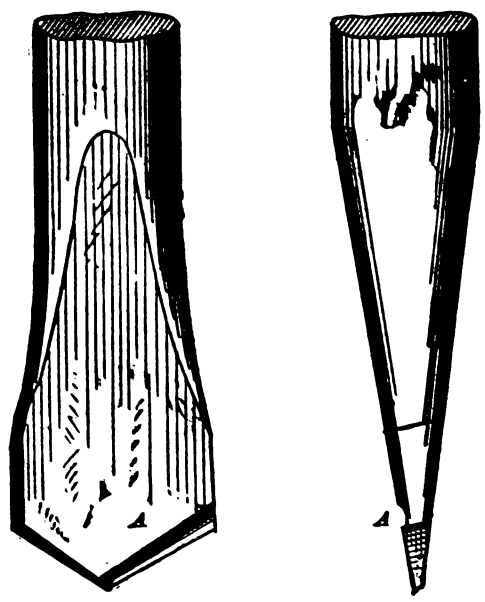

Fig. 1725.

bring the hole in its true position should be made as soon as a want of truth is discernible, because the shallower the recess the more easily the alteration may be made.

Sometimes a small hole is drilled as true to location as may be, and tested, any error discovered being corrected by a file; a larger drill is then used and the location again tested, and so on; in this way great precision of location may be obtained.

The more acute angle the cutting edges form one to the other, or in other words, the longer the cutting edges are in a drill of a given diameter, the more readily the drill will move over if one side of the recess be cut out as in Fig. 1727, and from some experiments made by Messrs. William Sellers and Co., it was determined that if the angle of one cutting edge to the other was more than 104° the drill would cease to move over.

In drilling wrought iron or the commoner qualities of steel the drill should be liberally supplied with either water or oil, but soapy water is better than pure. This keeps the drill cool and keeps the cutting edge clean, whereas otherwise the cuttings under a coarse feed are apt to stick fast to the drill point if the speed of the drill

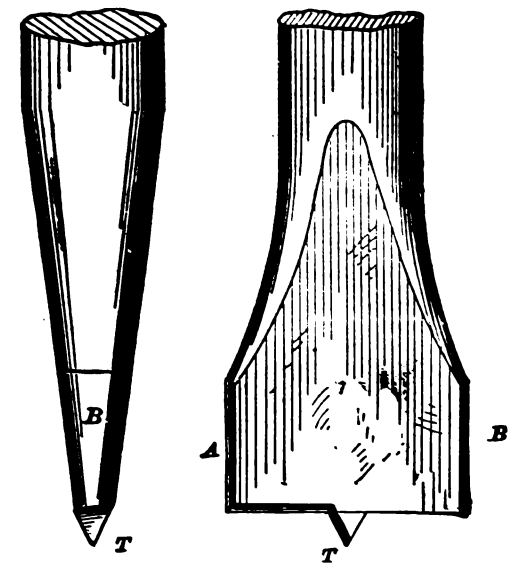

Fig. 1726.

is great. Furthermore, under excessive duty the drill is apt to become heated and softened.

For cast steel oil is preferable, or if the steel be very hard it will cut best dry under a slow speed and heavy pressure.

For brass and cast iron the drill should run dry, otherwise the cuttings clog and jam in the hole. When the drill squeaks either the cutting edge is dulled and the drill requires regrinding, or else the cuttings have jammed in the hole, and either defect should be remedied at once.

As soon as the point of the drill emerges through the work the feed should be lessened, otherwise the drill is apt to force through the weakened metal and become locked, which will very often either break or twist the drill. This may be accomplished when there is any end play to the drilling machine spindle by operating the feed motion in a direction to relieve the feed as soon as the point of the drill has emerged through the bottom of the hole, thus permitting the weight of the spindle to feed the drill. In a drilling machine, however, in which the weight of the spindle is counterbalanced, the feed may be simply reduced while the drill is passing through the bottom of the hole.

Drills for work of ordinary hardness are tempered to an orange

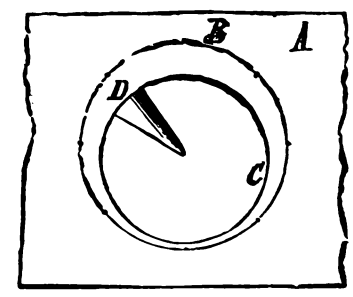

Fig. 1727.

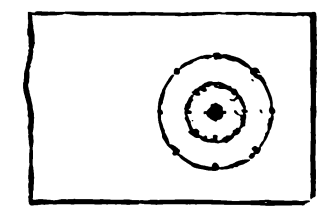

Fig. 1728.

purple, but if the metal to be cut is very hard a straw color is preferable, or the drill may be left as hard as it leaves the water, that is to say hardened, but not tempered. In these cases the speed of the drill must be reduced.

To assist a drill in taking hold of hard metal it is an excellent plan to jag the surface of the metal with a chisel which will often start the drill to its cut when all other means have failed. It is obvious from previous remarks that the harder the drill the less the angle of the end facets.

In cases of extreme hardness two drills may with advantage be used intermittently upon the same hole; one of these should have its cutting edges ground at a more acute angle one to the other than is the case with the other drill, thus the cutting edge will be lessened in length while the drill will retain the strength due to

its diameter, so that a maximum of pressure may be placed upon it. When one drill has cut deep enough to bring its full length of cutting edge into action, it may be removed and the other drill employed, and so on.

The drill (for hard steel) should be kept dry until it has begun to cut, when a very little oil may be employed, but for chilled cast iron it should be kept dry.

Small work to be drilled while resting upon a horizontal table may generally be held by hand, and need not therefore be secured in a chuck or to the table, because the pressure of the drill forces the work surface to the table, creating sufficient friction to hold the work from rotating with the drill. For large holes, however, the work may be secured in chucks or by bolts and plates as described for lathe and planer work, or held in a vice.

The following table for the sizes of tapping holes is that issued by the Morse Twist Drill and Machine Co. In reply to a communication upon the subject that company states. " If in our estimate the necessary diameter of a tap drill to give a full thread comes nearest to a $\frac{1}{64}$ inch measurement, we give the size of the drill in 64ths of an inch. If nearest to a 32nd size of drill we give the drill size in 32nds of an inch.

In the following table are given the sizes of tapping drills, to give full threads, the diameters being practically but not decimally correct:—

Diameter of tap.	Number threads to inch.			Drill for V-thread.			Drill for U.S.S. thread.			Drill for Whitworth thread.		
$\frac{1}{4}$	16	18	20	$\frac{5}{32}$	$\frac{5}{32}$	$\frac{11}{64}$	—	—	$\frac{3}{16}$	—	—	$\frac{3}{16}$
$\frac{5}{32}$	16	18	20	$\frac{3}{16}$	$\frac{13}{64}$	$\frac{13}{64}$	—	—	—	—	—	—
$\frac{3}{16}$	16	18	—	$\frac{7}{32}$	$\frac{15}{64}$	—	—	$\frac{1}{4}$	—	—	$\frac{15}{64}$	—
$\frac{11}{32}$	16	18	—	$\frac{1}{4}$	$\frac{17}{64}$	—	—	—	—	—	—	—
$\frac{3}{8}$	14	16	18	$\frac{1}{4}$	$\frac{9}{32}$	$\frac{9}{32}$	—	$\frac{9}{32}$	—	—	$\frac{9}{32}$	—
$\frac{13}{32}$	14	16	18	$\frac{19}{64}$	$\frac{21}{64}$	$\frac{21}{64}$	—	—	—	—	—	—
$\frac{7}{16}$	14	16	—	$\frac{21}{64}$	$\frac{11}{32}$	—	$\frac{11}{32}$	—	—	$\frac{11}{32}$	—	—
$\frac{15}{32}$	14	16	—	$\frac{23}{64}$	$\frac{3}{8}$	—	—	—	—	—	—	—
$\frac{1}{2}$	12	13	14	$\frac{3}{8}$	$\frac{25}{64}$	$\frac{25}{64}$	—	$\frac{13}{32}$	—	$\frac{3}{8}$	—	—
$\frac{17}{32}$	12	13	14	$\frac{13}{32}$	$\frac{27}{64}$	$\frac{27}{64}$	—	—	—	—	—	—
$\frac{9}{16}$	12	14	—	$\frac{7}{16}$	$\frac{29}{64}$	—	$\frac{7}{16}$	—	—	—	—	—
$\frac{19}{32}$	12	14	—	$\frac{15}{32}$	$\frac{31}{64}$	—	—	—	—	—	—	—
$\frac{5}{8}$	10	11	12	$\frac{15}{32}$	$\frac{1}{2}$	$\frac{1}{2}$	—	$\frac{1}{2}$	—	—	$\frac{1}{2}$	—
$\frac{21}{32}$	10	11	12	$\frac{1}{2}$	$\frac{17}{32}$	$\frac{17}{32}$	—	—	—	—	—	—
$\frac{11}{16}$	11	12	—	$\frac{9}{16}$	$\frac{9}{16}$	—	—	—	—	—	—	—
$\frac{23}{32}$	11	12	—	$\frac{19}{32}$	$\frac{19}{32}$	—	—	—	—	—	—	—
$\frac{3}{4}$	10	11	12	$\frac{19}{32}$	$\frac{5}{8}$	$\frac{5}{8}$	$\frac{5}{8}$	—	—	$\frac{5}{8}$	—	—
$\frac{25}{32}$	10	11	12	$\frac{5}{8}$	$\frac{21}{32}$	$\frac{21}{32}$	—	—	—	—	—	—
$\frac{13}{16}$	10	—	—	$\frac{21}{32}$	—	—	—	—	—	—	—	—
$\frac{27}{32}$	10	—	—	$\frac{11}{16}$	—	—	—	—	—	—	—	—
$\frac{7}{8}$	9	10	—	$\frac{45}{64}$	$\frac{23}{32}$	—	$\frac{23}{32}$	—	—	$\frac{23}{32}$	—	—
$\frac{29}{32}$	9	10	—	$\frac{47}{64}$	$\frac{3}{4}$	—	—	—	—	—	—	—
$\frac{15}{16}$	9	—	—	$\frac{49}{64}$	—	—	—	—	—	—	—	—
$\frac{31}{32}$	9	—	—	$\frac{51}{64}$	—	—	—	—	—	—	—	—
1	8	—	—	$\frac{13}{16}$	—	—	$\frac{27}{32}$	—	—	$\frac{27}{32}$	—	—
$1\frac{1}{32}$	8	—	—	$\frac{53}{64}$	—	—	—	—	—	—	—	—
$1\frac{1}{16}$	8	—	—	$\frac{55}{64}$	—	—	—	—	—	—	—	—
$1\frac{3}{32}$	8	—	—	$\frac{57}{64}$	—	—	—	—	—	—	—	—
$1\frac{1}{8}$	7	8	—	$\frac{29}{32}$	$\frac{15}{16}$	—	$\frac{15}{16}$	—	—	$\frac{15}{16}$	—	—
$1\frac{5}{32}$	7	8	—	$\frac{15}{16}$	$\frac{31}{32}$	—	—	—	—	—	—	—
$1\frac{3}{16}$	7	8	—	$\frac{31}{32}$	1	—	—	—	—	—	—	—
$1\frac{7}{32}$	7	8	—	1	$1\frac{1}{32}$	—	—	—	—	—	—	—
$1\frac{1}{4}$	7	—	—	$1\frac{1}{32}$	—	—	$1\frac{1}{16}$	—	—	$1\frac{1}{16}$	—	—
$1\frac{9}{32}$	7	—	—	$1\frac{1}{16}$	—	—	—	—	—	—	—	—
$1\frac{5}{16}$	7	—	—	$1\frac{3}{32}$	—	—	—	—	—	—	—	—
$1\frac{11}{32}$	7	—	—	$1\frac{1}{8}$	—	—	—	—	—	—	—	—
$1\frac{3}{8}$	6	—	—	$1\frac{1}{8}$	—	—	$1\frac{5}{32}$	—	—	$1\frac{5}{32}$	—	—
$1\frac{13}{32}$	6	—	—	$1\frac{5}{32}$	—	—	—	—	—	—	—	—
$1\frac{7}{16}$	6	—	—	$1\frac{5}{32}$	—	—	—	—	—	—	—	—
$1\frac{15}{32}$	6	—	—	$1\frac{3}{16}$	—	—	—	—	—	—	—	—
$1\frac{1}{2}$	6	—	—	$1\frac{13}{64}$	—	—	$1\frac{9}{32}$	—	—	$1\frac{9}{32}$	—	—
$1\frac{17}{32}$	6	—	—	$1\frac{9}{32}$	—	—	—	—	—	—	—	—
$1\frac{9}{16}$	6	—	—	$1\frac{9}{32}$	—	—	—	—	—	—	—	—
$1\frac{19}{32}$	6	—	—	$1\frac{5}{16}$	—	—	—	—	—	—	—	—
$1\frac{5}{8}$	5	$5\frac{1}{2}$	—	$1\frac{9}{32}$	$1\frac{5}{16}$	—	—	$1\frac{3}{8}$	—	$1\frac{23}{64}$	—	—
$1\frac{21}{32}$	5	$5\frac{1}{2}$	—	$1\frac{5}{16}$	$1\frac{11}{32}$	—	—	—	—	—	—	—
$1\frac{11}{16}$	5	$5\frac{1}{2}$	—	$1\frac{11}{32}$	$1\frac{3}{8}$	—	—	—	—	—	—	—
$1\frac{23}{32}$	5	$5\frac{1}{2}$	—	$1\frac{3}{8}$	$1\frac{13}{32}$	—	—	—	—	—	—	—
$1\frac{3}{4}$	5	—	—	$1\frac{13}{32}$	—	—	$1\frac{1}{2}$	—	—	$1\frac{1}{2}$	—	—
$1\frac{25}{32}$	5	—	—	$1\frac{7}{16}$	—	—	—	—	—	—	—	—
$1\frac{13}{16}$	5	—	—	$1\frac{15}{32}$	—	—	—	—	—	—	—	—
$1\frac{27}{32}$	5	—	—	$1\frac{1}{2}$	—	—	—	—	—	—	—	—
$1\frac{7}{8}$	$4\frac{1}{2}$	5	—	$1\frac{17}{32}$	$1\frac{17}{32}$	—	—	$1\frac{5}{8}$	—	$1\frac{27}{64}$	—	—
$1\frac{29}{32}$	$4\frac{1}{2}$	5	—	$1\frac{9}{16}$	$1\frac{9}{16}$	—	—	—	—	—	—	—
$1\frac{15}{16}$	$4\frac{1}{2}$	5	—	$1\frac{19}{32}$	$1\frac{19}{32}$	—	—	—	—	—	—	—
$1\frac{31}{32}$	$4\frac{1}{2}$	5	—	$1\frac{5}{8}$	$1\frac{5}{8}$	—	—	—	—	—	—	—
2	$4\frac{1}{2}$	—	—	$1\frac{21}{32}$	—	—	$1\frac{23}{32}$	—	—	$1\frac{45}{64}$	—	—

To drive all drills by placing them directly in the socket of the drilling machine spindle would necessitate that all the drills should have their shanks to fit the drilling machine socket. This would involve a great deal of extra labor in making the drills, because the socket in the machine spindle must be large enough to fit the size of shank that will be strong enough to drive the largest drill used in the machine, hence the small drills would require to be forged down from steel equal to the full diameter of the shank of the largest drill. To obviate this difficulty the sockets already described with reference to drilling in the lathe are used.

The employment of these sockets preserves the truth of the bore of the drilling machine spindle by greatly diminishing the necessity to insert and remove the shank from the drill spindle, because each socket carrying several sizes of drills (as given with reference to lathe work) the sockets require less frequent changing.

Drill shanks are sometimes made parallel, with a flat place as at A in Fig. 1729, to receive the pressure of the set-screw by which it is driven. To enable the shank to run true it must be a close fit to the socket and should be about five diameters long. The objection to this form is that the pressure of the set-screw tends to force the drill out of true, as does also the wear of the socket bore.

These objections will obviously be diminished in proportion as the drill shank is made a tight fit to the socket, and to effect this and still enable the drill to be easily inserted and removed from

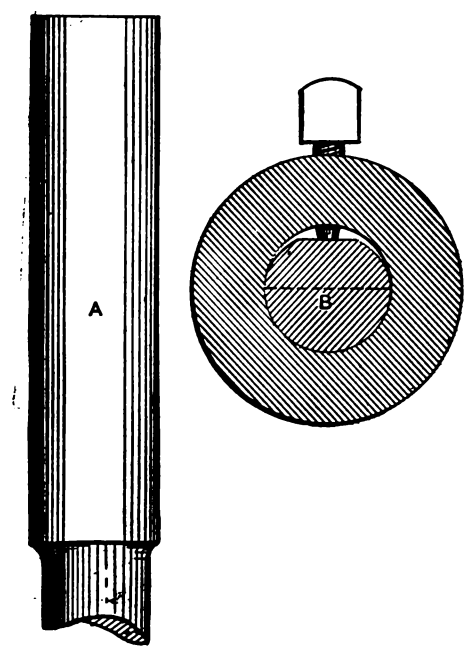

Fig. 1729.

the socket, the drill shank may be first made a tight fit to the socket bore, and then eased away on the half circumference on the side of the flat place, leaving it to fit on the other half circumference which is shown below the dotted line B in the end view in the figure. The set-screw is also objectionable, since it requires the use of a wrench, and is in the way and liable to catch the operator's clothing.

There is, however, one advantage in employing a set-screw for twist drills, inasmuch as that, on account of the front rake on a twist drill, there is a strong tendency for the drill, as soon as the point emerges through the work, to run forward into the work and by ripping in become locked. This is very apt to be the case if there is any end play in the driving spindle, because the pressure of the cut forces the spindle back from the cut; but so soon as the drill point emerges and the pressure is reduced, the weight of the spindle acting in concert with the front rake on the drill causes the spindle to drop, taking up the lost motion in the opposite direction. In addition to this the work will from the same cause lift and run up the drill, often causing an increase in the duty sufficient to break the drill.

If the spindle has no lost motion and the work is bolted or fastened to the table or in a chuck, the drill if it has a taper shank only will sometimes run forward and slip loose in the driving socket. This, however, may be obviated by feeding the drill very slowly after its point emerges through the work.

Yet another form in which the cylindrical shanks of drills have been driven is shown in Fig. 1730. The shank is provided with a longitudinal groove turning at a right angle; at its termination the socket is provided with a screw whose point projects and fits into the shank groove. The drill is inserted and turned to the right, the end of the screw driving the drill and preventing it from coming out or running forward.

Flat drills are usually provided with a square taper shank such as shown in Fig. 1730, an average amount of taper being 1¼ inches per foot.

There are several disadvantages in the use of a square shank.

1st. It is difficult to forge the drill true and straight with the shank.

2nd. It is difficult to make the square socket true with the axial line of the machine spindle, and concentric with the same from end to end.

3rd. It is difficult to fit the shank of the drill to the socket and have its square sides true with the axial line of the drill.

4th. It is an expensive form of shank to fit. It is a necessity, however, when the cutting duty is very heavy, as in the case of stocks carrying cutters for holes of large diameter.

In order to properly fit a square shank to a socket it should be pressed into the socket by hand only, and pressed laterally in the

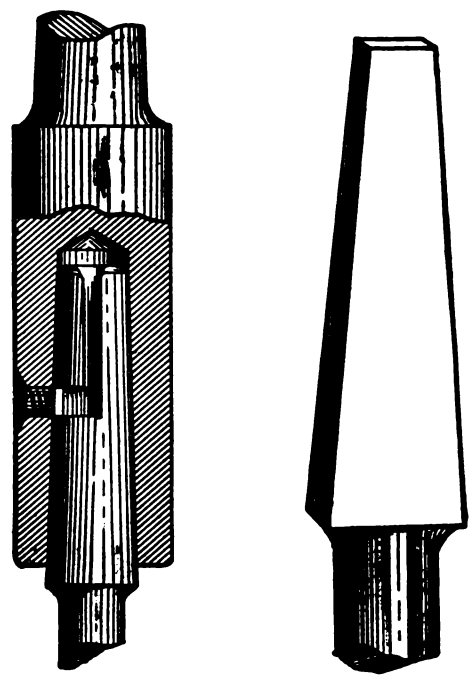

Fig. 1730.

direction of each side of the square. If there is no lateral movement the shank is a fit, and the spindle may be revolved to see if the drill runs true, as it should do if the body of the drill is true with the shank (and this must always be the case to obtain correct results). The drill must be tried for running true at each end of the cylindrical body of the drill, which, being true with the square shank, may be taken as the standard of truth in grinding the drill, so that supposing the hole in the driving spindle to be true and the drill shank to be properly fitted, the drill will run true whichever way inserted. If the body of the drill runs out of true it will cause a great deal of friction by rubbing and forcing the cuttings against the sides of holes, especially if the clearance be small or the hole a deep one.

In fitting the shank, the fitting or bearing marks will show most correctly when the shank is driven very lightly home, for if driven in too firmly the bearing marks will extend too far in consequence of the elasticity of the metal. If the hole in the spindle is not true with the axial line of the spindle, or if the sides of the hole are not a true square or are not equidistant from the axial line of the spindle, the drill must be fitted with one side of its square shank always placed to the same side of the square in the socket, and these two sides must therefore be marked so as to denote how to insert the drill without having to try it in the socket. Usually a centre-punch mark, as at E, Fig. 1731, is made on the drill and another on the collar as at *f*.

To enable the extraction of the drill from the socket the latter is provided with a slot, shown in figure at C, the slot passing through the spindle and the end of the drill protruding into the slot, so that a key driven into the slot will force the drill from the socket. The key employed for this purpose should be of some soft metal, as

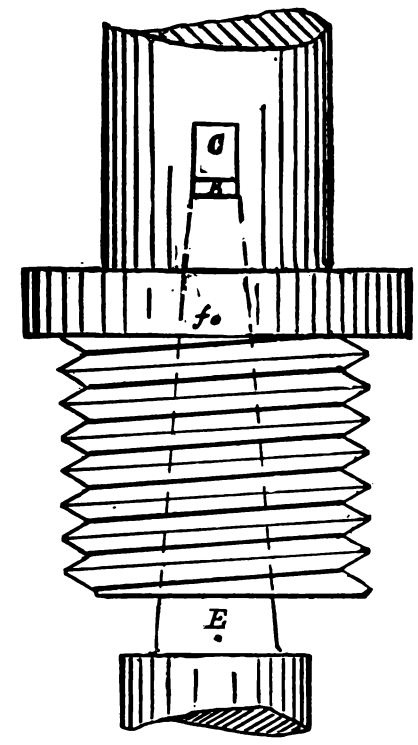

Fig. 1731.

brass or hard composition brass, so that the key shall not condense or press the metal of the keyway, and after the key is inserted it should be lightly tapped with a hammer, travelling in the direction of the line of the spindle and not driven through the keyway.

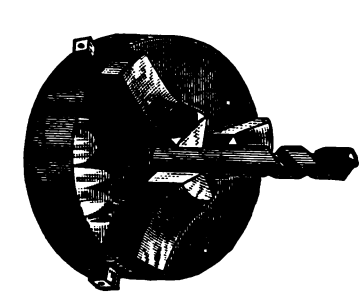

Fig. 1732.

The drill should not be given a blow or tap to loose it in the spindle, as this is sure in time to make its socket hole out of true.

The thread shown on the end of the drill spindle in figure is to receive chucks for holding and driving drills.

The various forms of small drill chucks illustrated in connection

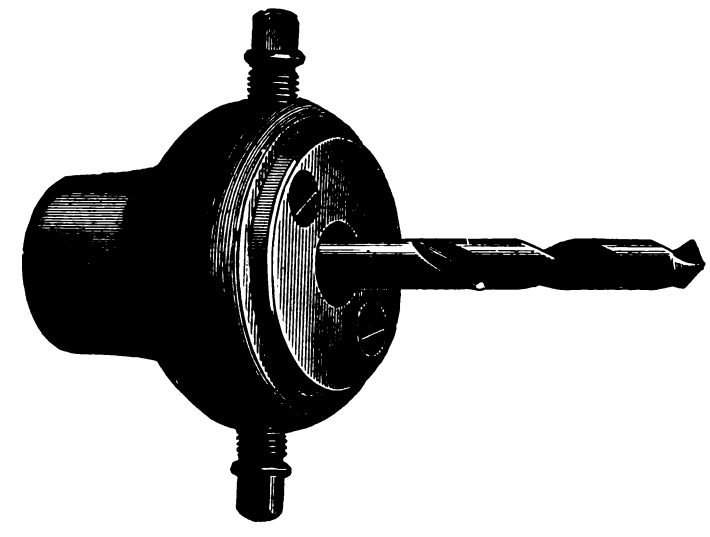

Fig. 1733.

with the subject of lathe chucks are equally suitable for driving drills in the drilling machine.

Fig. 1732, however, represents an excellent three-jawed chuck for driving drills, the bite being very narrow and holding the drill with great firmness.

Fig. 1733 represents a two-jawed drill chuck in which the

screws operate a pair of dies for gripping parallel shank drills, the screws being operated independently.

In other forms of similar chucks the bite is a V recess parallel to the chuck axis, the only difference between a drill chuck for a drilling machine and one for a lathe being that for the former the jaws do not require outside bites nor to be reversible.

Holes that are to be made parallel, straight, cylindrically true in the drilling machine, are finished by the reamer as already described with reference to lathe work, and it is found as in lathe work that in order that a reamer may finish holes to the same

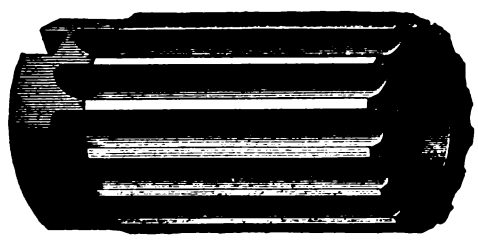

Fig. 1734.

diameter, it is necessary that it take the same depth of finishing cut in each case, an end that is best obtained by the use of three reamers, the first taking out the irregularities of the drilled hole, and the second preparing it for the light finishing cut to be taken by the third.

All the remarks made upon the reamer when considered with reference to lathe work apply equally to its use in the drilling machine.

Another tool for taking a very light cut to smooth out a hole and cut it to exact size is the shell reamer shown in Fig. 1734, which

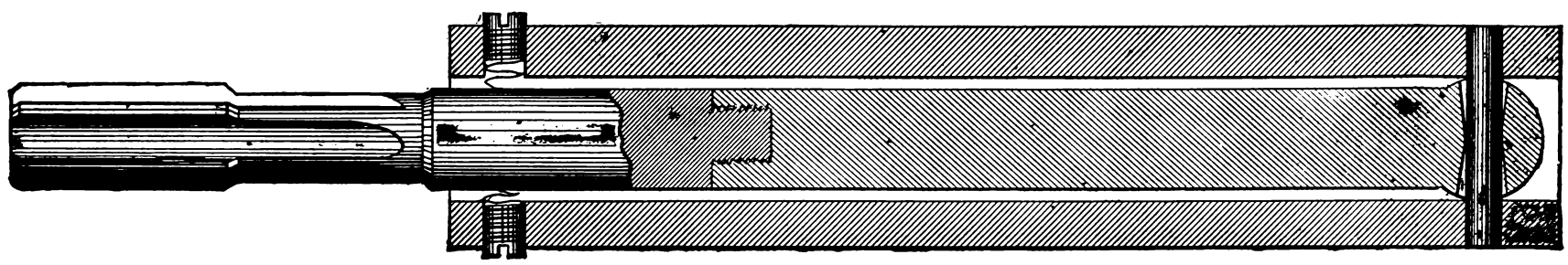

Fig. 1735.

fits on a taper mandrel through which passes a square key fitting into the square slot shown in the shell reamer.

Reamers may be driven by drill chucks, but when very true and parallel work is required, and the holes are made true before using the reamer, it is preferable to drive them by a socket that permits of their moving laterally. Especially is this the case with rose-bits. Fig. 1735, which is taken from *The American Machinist*, represents a socket of this kind, being pivoted at its driving or shank end, and supported at the other by two small spiral springs. The effect is that if the socket does not run quite true the reamer is permitted to adjust itself straight and true in the hole being reamed, instead of rubbing and binding against its walls, which would tend to enlarge its mouth and therefore impair its parallelism.

Cotter drills, slotting drills, or keyway drills, three names designating the same tool, are employed to cut out keyways, mortises, or slots.

Fig. 1736 represents a common form of cotter or keyway drill, the cutting edges being at A, A, and clearance being given by grinding the curve as denoted by the line C. In some cases a stock S and two detachable bits or cutters C, C, are used as in Fig. 1737, the bits being simple tools secured in slots in the stock by set-screws, and thus being adjustable for width so that they may be used to cut keyways of different widths.

The feed of keyway drills should be light, and especial care must be taken where two spindles are used, to keep them in line, or otherwise the keyway will not come fair, as is shown in Fig. 1738, where the half drilled from side A and that drilled from side B are shown not to come fair at their point of junction C. This is more apt to occur when a deep keyway is drilled one half from each side. Hence in such a case great care must be exercised in setting the work true, because the labor in filing out such a keyway is both tedious and expensive.

In producing holes of above or about two inches in diameter, cutters such as shown in Fig. 1739 may be employed. A is a stock

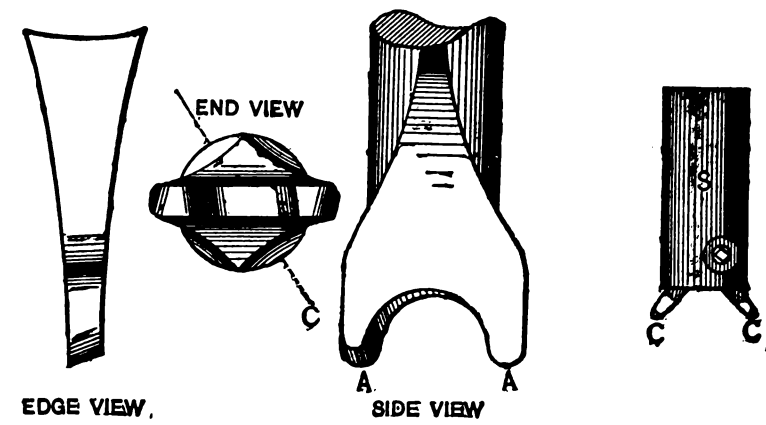

Fig. 1736.

Fig. 1737.

carrying a cutter B secured in place by a key C. Holes are first drilled to receive the pin D, which serves as a guide to steady the stock. The amount of cutting duty is obviously confined to the production of the holes to receive the pin and the metal removed from the groove cut by the cutters, so that at completion of the cutter duty there comes from the work a ferrule or annular ring that has been cut out of the work.

For use on wrought iron or steel the front faces of the cutters may be given rake as denoted by the dotted line at E, and smooth and more rapid duty may be obtained if the cutter be set back, as in Fig. 1740, the cutting edge being about in a line with line A, in which case the front face may be hollowed out as at B, and take a good cut without the digging in and jumping that is apt to occur in large holes if the cutter is not thus set back. The

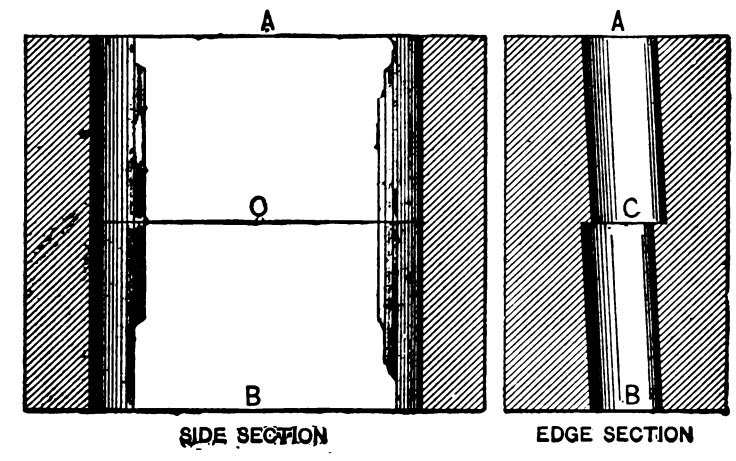

Fig. 1738.

larger the diameter of the work the greater the necessity of setting the cutting edge back, thus in Fig. 1741 the cutter is to be used to cut a large circle out of a plate P, as, say, a man-hole in a boiler sheet. The cutter C is carried in a bar B secured in the stock A by a screw, and unless the cutter is set well back it is liable to dip into the work and break.

It is obvious that the pin E in the figure must be long enough to pass into the hole in the plate before the cutter meets the plate surface and begins to cut, so that the pin shall act as a guide to steady the cutter, and also that in all cutters or cutter driving

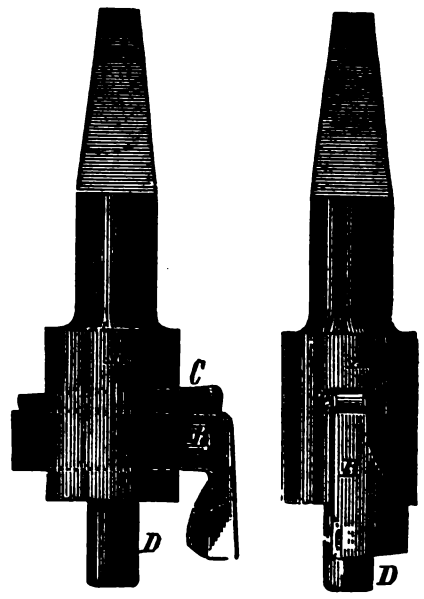

Fig. 1739.

stocks the shank must be either of large diameter or else made square, in order to be able to drive the cut at the increased leverage over that in drilling.

In these forms of tube plate cutters it is necessary to drill a hole to receive the pin D. But this necessity may be removed by

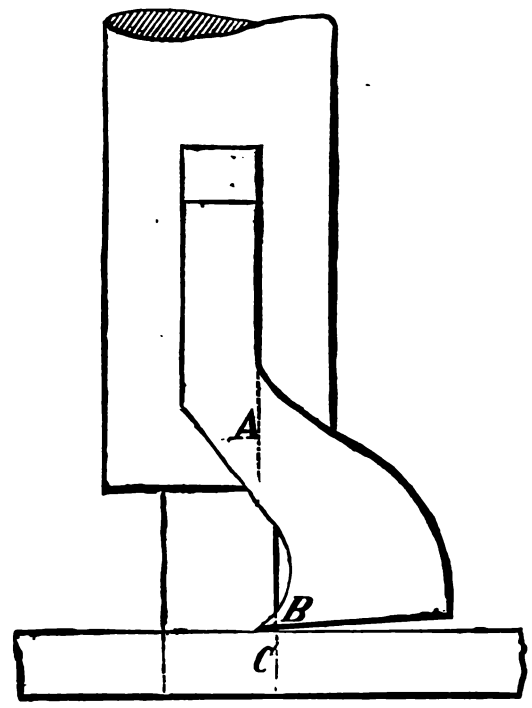

Fig. 1740.

means of a cutter, such as shown in Fig. 1742, which is given simply as a representative of a class of such cutters. A is a cutter stock having the two cutters B B fitted in slots and bolted to it. C is a spiral spring inserted in a hole in A and pressing

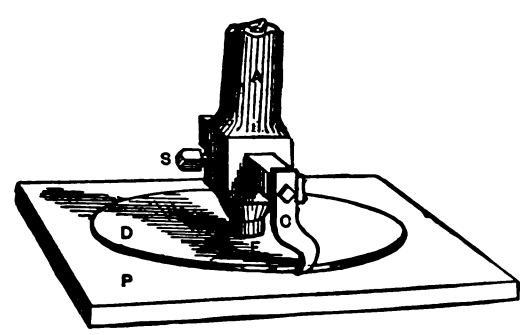

Fig. 1741.

upon the pin D, which has a conical point. The work is provided with a deep centre-punch mark denoting the centre of the hole to be cut. The point of D projects slightly beyond the cutting edges of the cutters, and as it enters the centre-punch mark in the work it forms a guide point to steady the cutters as they rotate. As the cutters are fed to their cut, the pin D simply compresses the spiral spring C and passes further up the cutter stock. Thus the point of D serves instead of a hole and pin guide.

A simple form of adjustable cutter is shown in Figs. 1743 and 1744. It consists of a stock A A with the shank B, made tapering

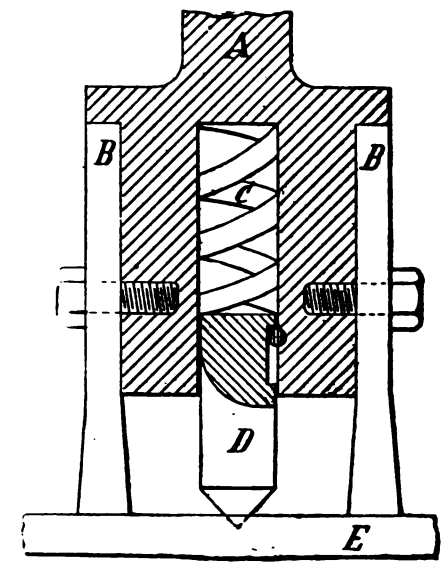

Fig. 1742.

to fit the socket of a boring or drilling machine. Through the body of the stock is a keyway or slot, in which is placed the cutter C, provided in the centre of the upper edge with a notch or recess. Into this slot fits the end of the piece D, which is pivoted upon the pin E. The radial edge of D has female worm teeth upon it. F is a worm screw in gear with the radial edge of D. Upon the outer

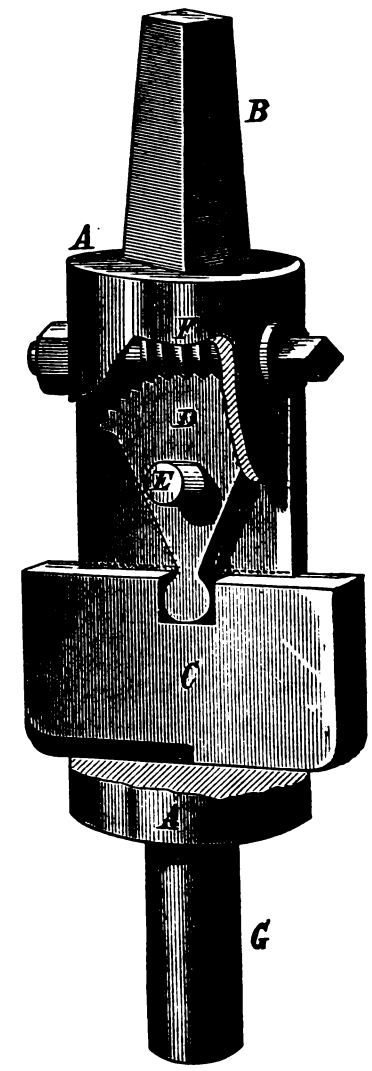

Fig. 1743.

end of F is a square projection to receive a handle, and it is obvious that by revolving the screw F, the cutter C will be moved through the slot in the stock, and hence the size of the circle which the cutter will describe in a revolution of the stock A may be determined by operating the screw F. Thus the tool is adjustable for different sizes of work, while it is rigidly held to any size without any tendency whatever either to slip or alter its form. The pin G is

not an absolutely necessary part of the tool, but it is a valuable addition, as it steadies the tool. This is necessary when the spindle of the machine in which it is used has play in the bearings, which is very often the case with boring and drilling machines. The use of G is to act as a guide fixed in the table upon which the work is held, to prevent the tool from springing away from the cut, and hence enabling it to do much smoother work. It is usual to make the width of the cutter C to suit some piece of work of which there is a large quantity to do, because when the cutter is in the centre of the stock both edges may per-

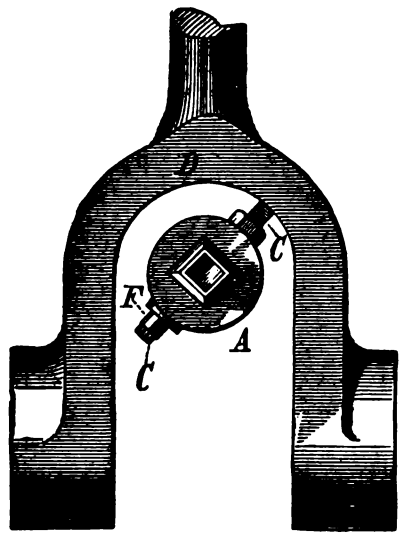

Fig. 1744.

form cutting duty; in which case the tool can be fed to the cut twice as fast as when the cutter is used for an increased diameter, and one cutting edge only is operative. The tool may be put between the lathe centres and revolved, the work being fastened to the lathe saddle. In this way it is exceedingly useful in cutting out plain cores in half-core boxes.

In addition to its value as an adjustable boring tool this device may be used to cut out sweeps and curves, and is especially adapted to cutting those of double eyes. This operation is shown in Fig. 1744, in which D is the double eye, A

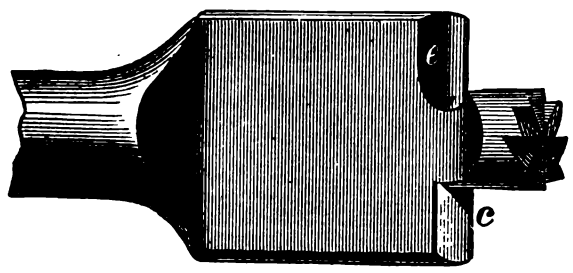

Fig. 1745.

is the tool stock, F is the adjusting screw, and C is the cutter. The circular ends of connecting rod strips and other similar work also fall within the province of this tool, and in the case of such work upon rods too long to be revolved this is an important item, as such work has now to be relegated to that slowest and most unhandy of all machine tools, the slotting machine.

It is obvious that any of the ordinary forms of cutter may be used in this stock.

For enlarging a hole for a certain distance the counterbore is employed. Fig. 1745 represents a counterbore or pin drill, in

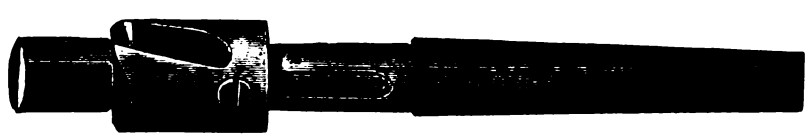

Fig. 1746.

which the pin is cut like a reamer, so as to ream the hole and insure that the pin shall fit accurately. The sides are left with but little clearance and with a dull edge, so that they will not cut, the cutting edges being at *e*, *c* and the clearance on the end faces.

For counterboring small holes or for facing the metal around their ends, the form of counterbore shown in Fig. 1746 is employed. The pin must be an accurate fit to the hole, and to capacitate one tool for various sizes of holes the bit is made interchangeable. The stock has a flat place on it to receive the pressure of the screw that secures the counterbore, and the end of the stock is reduced in diameter, so that the counterbore comes against a shoulder and cannot push up the stock from the pressure of the feed; the end of the counterbore is bored to receive the tit pin, thus making it permissible to exchange the pin, and use various sizes in the same counterbore.

Twist drills for use in wood work are given a conical point, as

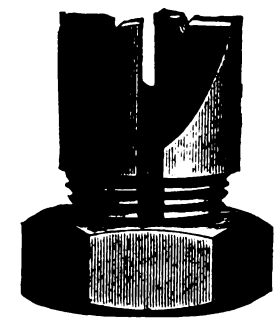

Fig. 1747.

was shown with reference to lathe drills, and when the holes are to be countersunk, an attachment, such as shown in Fig. 1747, may be used. It is a split and threaded taper, so that by operating the nut in one direction it may be locked to the drill, while by operating it in the other it will be loosened, and may be adjusted to any required distance from the point of the drill, as shown in Fig. 1748.

For larger sizes of holes a stock and cutter, such as shown in Fig. 1749, may be employed, receiving a facing or counterboring

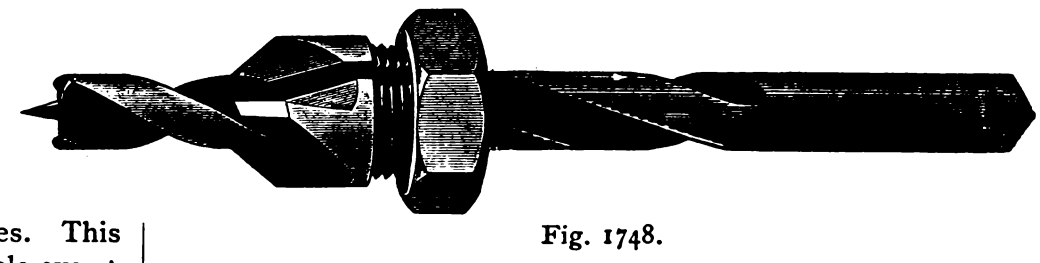

Fig. 1748.

cutter such as A, or a countersink bit such as B, and the bit may be made to suit various sizes of holes by making its diameter suitable for the smallest size of hole the tool is intended for, and putting ferrules to bring it up to size for larger diameters.

The cutters are fastened into the stock by a small key or wedge, as shown. By having the cutter a separate piece from the stock, the cutting edges may be ground with greater facility, while one stock may serve for various sizes of cutters. The slot in the stock should be made to have an amount of taper equal to that given to

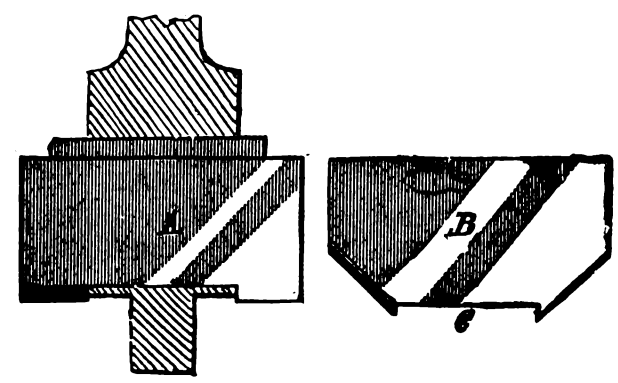

Fig. 1749.

the key, so that all the cutters may be made parallel in their widths or depths, and thus be more easily made, while at the same time the upper edge will serve as a guide to grind the cutting edges parallel to, and thus insure that they shall stand at a right angle to the axis of the stock, and that both will therefore take an equal share of the cutting duty.

When cutters of this kind are used to enlarge holes of large diameter it is necessary that the pin be long enough to pass down into a bushing provided in the table of the machine, and thus steady the bar or stock at that end.

For coning the mouths of holes the countersink is employed,

being provided with a pin, as shown in Fig. 1750; and it is obvious that the pin may be provided with bushings or ferrules. The smaller sizes of countersinks are sometimes made as in

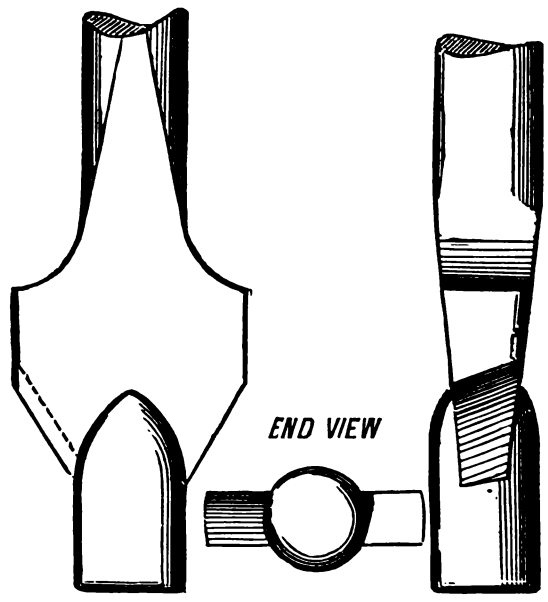

Fig. 1750.

Fig. 1751, the coned end being filed away slightly below the axis so as to give clearance to the cutting edge.

Fig. 1752 refers to a device for drilling square holes. The chuck for driving the drill is so constructed as to permit to the drill a certain amount of lateral motion, which is rendered

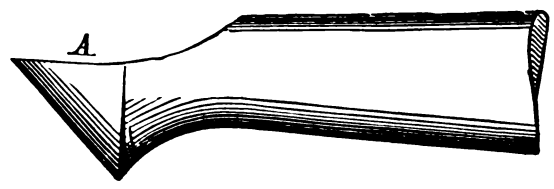

Fig. 1751.

necessary by the peculiar movement of the cutting edges of the drill which does not rotate on a fixed central point, but diverges laterally to a degree proportional to the size of the hole. For the chuck the upper part of the cavity of a metal cylinder is bored out so as to fit on the driving spindle. Below this bore a square

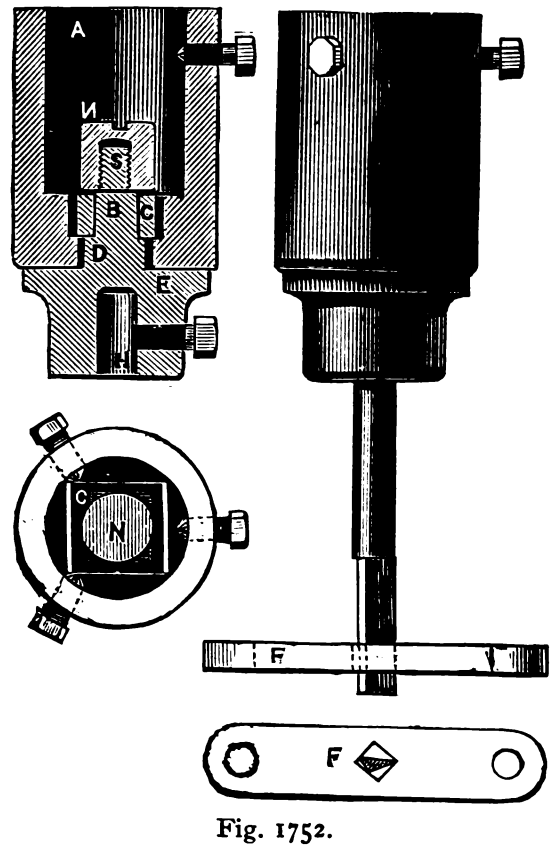

Fig. 1752.

recess is made, and below this latter and coming well within the diameter of the square recess, is a circular hole passing through the end of the chuck. The drill holder or socket is in a separate piece, the bottom portion of which is provided with a square or round recess for holding the drill shanks, and is held firmly in its socket by means of a set-screw. The upper part of the socket consists first of a screw (Fig. 1752) at S; secondly, of a squared shoulder B; thirdly, of a cylindrical shoulder D, and the circular part E, the drill shank being inserted at H. N is a nut holding the drill socket in the chuck. The socket being inserted in the chuck, the loose square collar C, which has an oblong rectangular slot in it, is put in, passing over the squared part of the socket. The nut N is then screwed up, bringing the face of E up to the face of the chuck, but not binding C, because C is thinner than the recess in which it lies. When this is done the socket will readily move in a horizontal plane to such a distance as the play between the two sides of the loose collar C and two of the sides of the recess will permit, while in the other direction it will move in a horizontal plane such distance as the play between the two sides of the square shoulder of the socket and the ends of the rectangular slot in the loose collar C will permit. The amount of this horizontal motion is varied to suit the size of the square hole to be drilled. Near to the lower end or cutting edges of the drill, there is fixed above the work a metal guide plate F having a square hole of the size requiring to be drilled. The drill is made three-sided, as

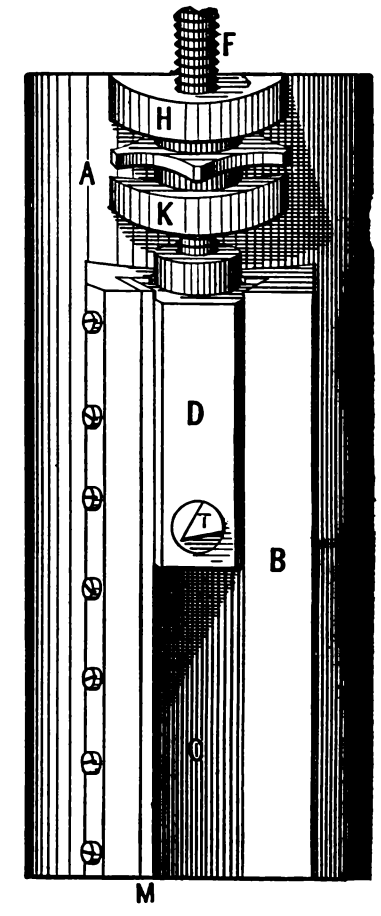

Fig. 1753.

shown, the dimensions of the three sides being such that the distance from the base to the apex of the triangle is the same as the length of the sides of the hole to be drilled. The drill may then be rotated through F as a guide, when it will drill a square hole.

The method of operation is as follows: The three-sided drill being fixed in the self-adjusting chuck, the guide bar with the square guide hole therein rigidly fixed above the point in the work where it is required to drill, the drilling spindle carrying the chuck drill is made to revolve, and is screwed or pressed downwards, upon which the drill works downwards through the square guide hole, and drills holes similar in size and form to that in the guide. The triangular drill for drilling dead square holes may also be used without the self-adjusting drill chuck in any ordinary chuck, when the substance operated upon is not very heavy nor stationary; then, instead of the lateral movement of the drill, such lateral movement will be communicated by the drill to the substance operated upon.

In making oblong dead square-cornered holes, either the substance to be operated upon must be allowed to move in one direction more than another, or the hole in the guide plate must be made to the shape required, and the drill chuck made to give the drill greater play in one direction.

The boring bars and cutters employed in drilling and boring machines are usually solid bars having fixed cutters, the bars feeding to the cut.

Figs. 1753, 1754, 1755, and 1756, however, represent a bar having a device for boring tapers in a drilling or boring machine.

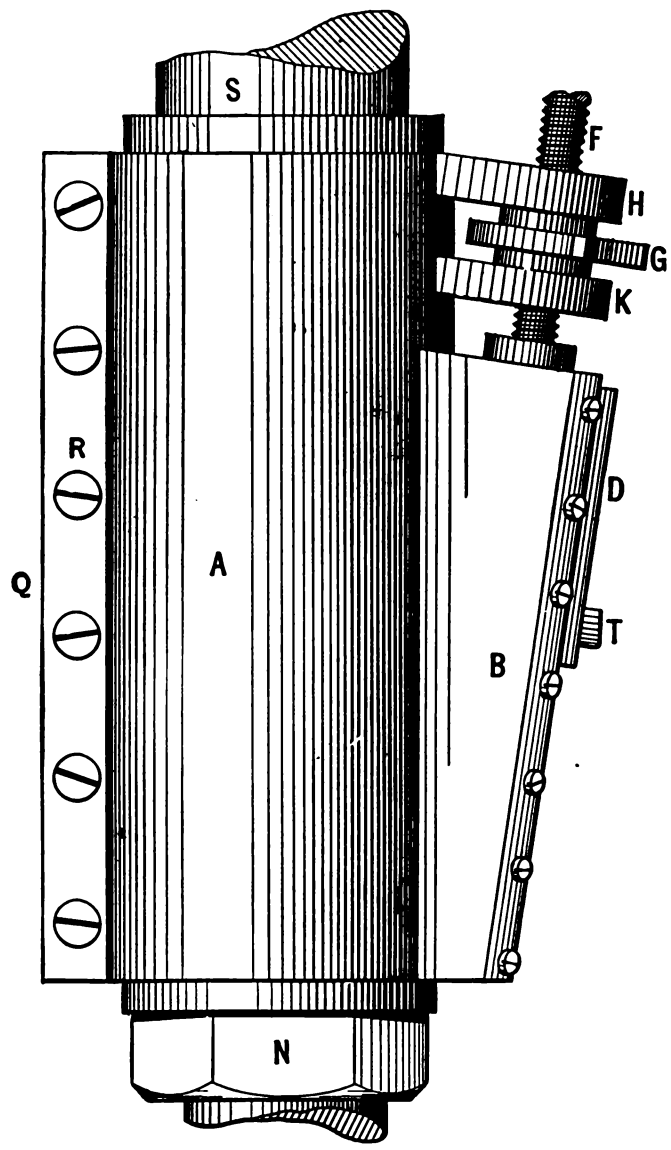

Fig. 1754.

It consists of a sleeve A fixed to the bar S, and having a slideway at an angle to the bar axis. In this slideway is a slide carrying the cutting tool and having at its upper end a feed screw with a star feed. Fig. 1753 shows the device without, and Fig. 1754 with, the boring bar. A is a sleeve having ribs B to provide the slideway C for the slide D carrying the cutting-tool T. The feed screw F is furnished with the star G between two lugs H K. A stationary pin bolted upon the work catches one arm of the star

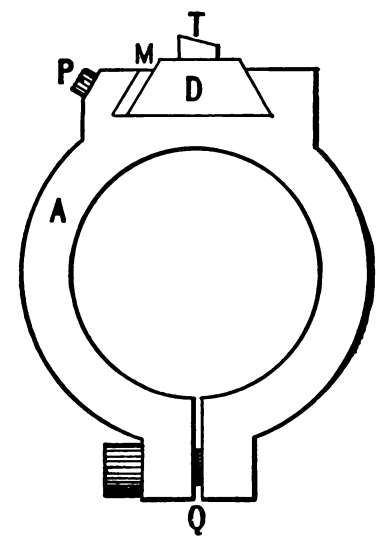

Fig. 1755.

at each revolution of the bar, and thus puts on the feed. To take up the wear of the tool-carrying slide, a gib M and set-screws P are provided, and to clamp the device to the boring-bar it is split

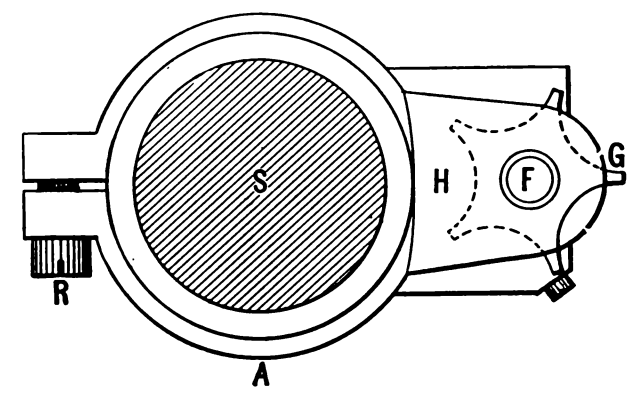

Fig. 1756.

at Q and furnished with screws R. The boring-bar S, furthermore, has a collar at the top and a nut N at the bottom. The tool, it will be observed, can be closely held and guided, the degree of taper of the hole bored being governed by the angle of the slideway C to the axis of the sleeve.

Chapter XX.—HAND DRILLING AND BORING TOOLS AND DEVICES.

Hand Drilling and Boring Tools.—The tools used for piercing holes in wood are generally termed boring tools, while those for metal are termed drilling tools when they cut the hole from the solid metal, and boring tools when they are used to enlarge an existing hole. Wood-boring tools must have their cutting edges so shaped that they sever the fibre of the wood before dislodging it, or otherwise the cutting edges wedge themselves in the fibre. This is accomplished, in cutting across the grain of the wood, in two ways: first, by severing the fibre around the walls of the hole and in a line parallel to the axial line of the

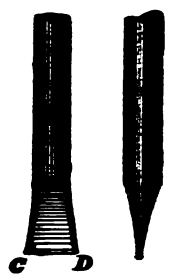

Fig. 1757.

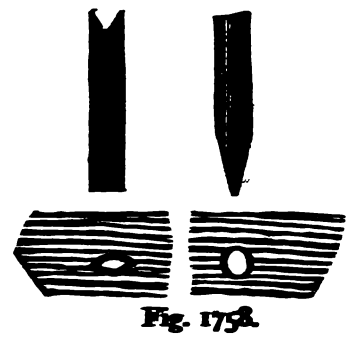

Fig. 1758.

boring tool, and removing it afterwards with a second cutting edge at a right angle to the axis of the boring tool; or else by employing a cutting edge that is curved in its length so as to begin to cut at the centre and operate on the walls of the hole, gradually enlarging it, as in the case of Good's auger bit (to be hereafter described), the action being to cut off successive layers from the end of the grain or fibre of the wood. Tools for very small holes or holes not above one-quarter inch in diameter usually operate on this second principle, as do also some of the larger tools, such as the nail bit or spoon bit and the German bit.

The simplest form of wood-piercing tool is the awl or bradawl,

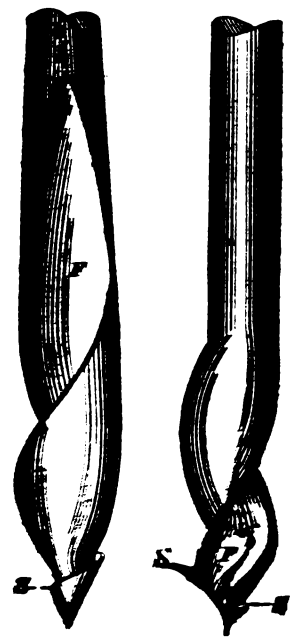

Fig. 1759.

shown in Figs. 1757 and 1758, its cutting end being tapered to a wedge shape whose width is sometimes made parallel with the stem and at others spread, as at C D in figure. It is obvious that when the end is spread the stem affords less assistance as a guide to pierce the hole straight.

It is obvious that the action of an awl is that of wedging and ing rather than of cutting, especially when it is operating endways of the grain.

Thus in Fig. 1758 is shown an awl operating, on the right, across the grain, and, on the left, endwise of the same. In the former position it breaks the grain endwise, while in the latter it wedges it apart. Awls are used for holes up to about three-sixteenths of an inch in diameter.

Fig. 1759 represents the gimlet bit having a spiral flute at F and a spiral projection at S S, which, acting on the principle of a screw, pulls the bit forward and into its cut. These bits are used

Fig. 1760.

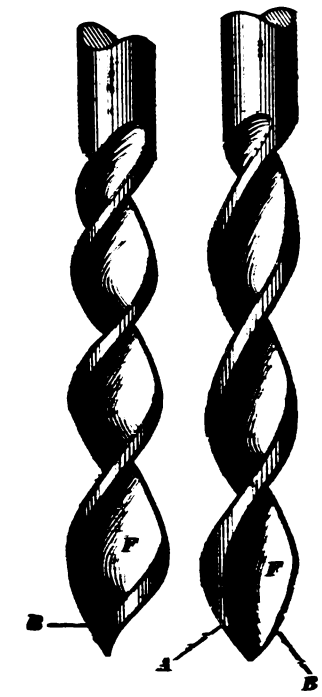

Fig. 1761.

in sizes from $\frac{1}{16}$ inch to $\frac{1}{2}$ inch. The edge of the spiral flute or groove here does the cutting, producing a conical hole and cutting off successive layers of the fibre until the full diameter of hole is produced. The upper part of the fluted end is reduced in diameter so as to avoid its rubbing against the walls of the hole and producing friction, which would make the tool hard to drive.

Figs. 1760 and 1761 represent the German bit, which is used for holes from $\frac{1}{16}$ inch to $\frac{3}{8}$ inch in diameter. This, as well as all other bits or augers, have a tapered square by which they are driven with a brace, the notch shown at N being to receive the

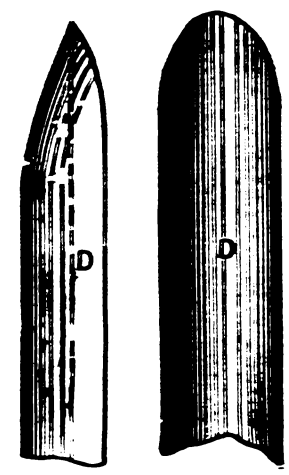

Fig. 1762.

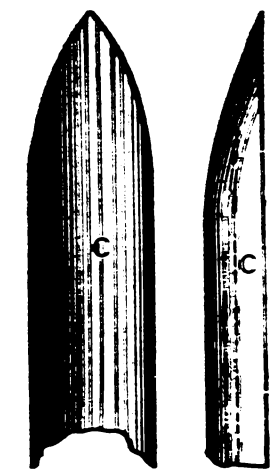

Fig. 1763.

spring catch of the brace that holds them in place. The cutting edges at A and B are produced by cutting away the metal behind them.

Fig. 1762 represents the nail bit, which is used for boring across the grain of the wood. Its cutting edge severs the fibre around the walls of the hole, leaving a centre core uncut, which therefore remains in the hole unless the hole is pierced entirely through the

material. If used to bore endways or parallel with the direction of the fibre or grain of the wood it wedges itself therein.

The groove of the nail bit extends to the point, as shown by the dotted line in the figure. Nail bits are used in sizes from $\frac{1}{16}$ to $\frac{3}{8}$ inch.

Fig. 1763 represents the spoon bit whose groove extends close to the point, as shown by the dotted line C.

Fig. 1764 represents the pod or nose bit, whose cutting edge extends half way across its end and therefore cuts off successive

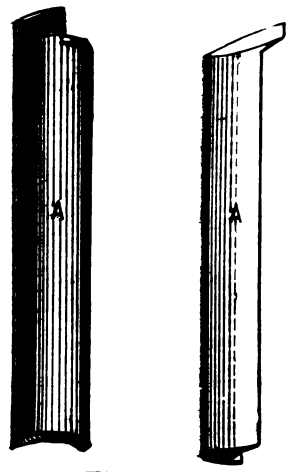

Fig. 1764.

layers of the fibres, which peculiarly adapts it for boring endways of the grain, making a straight and smooth hole. It is made in sizes up to as large as four inches, and is largely used for the bores of wooden pipes and pumps, producing holes of great length, sometimes passing entirely through the length of the log.

Fig. 1765 represents the auger bit, which is provided with a conical screw S which pulls it forward into the wood. Its two wings W have cutting edges at D, D, which, being in advance of the cutting edges A,B, sever the fibre of the wood, which is after-

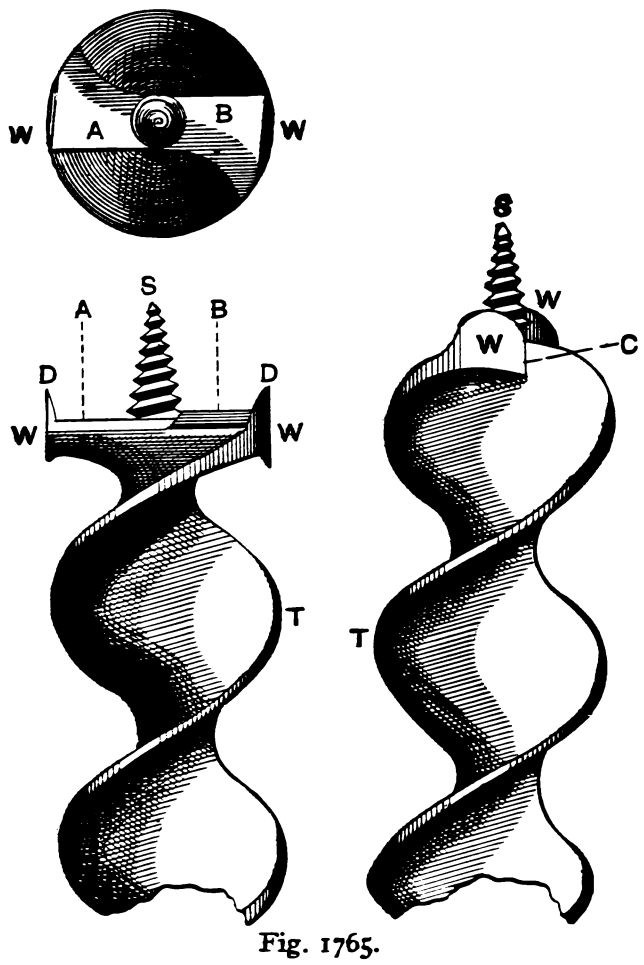

Fig. 1765.

wards cut off in layers whose thickness is equal to the pitch of the thread upon its cone S. The sides of the wings W obviously steady the auger in the hole, as do also the tops T of the twist. This tool is more suitable for boring across the grain than lengthways of it, because when boring lengthways the wings W obviously wedge themselves between the fibres of the wood.

This is obviated in Cook's auger bit, shown in Fig. 1766, in which the cutting edge is curved, so that whether used either across or with the grain the cutting edge produces a dished seat and cuts the fibre endways while removing the material in a spiral layer. The curve of the cutting edge is such that near the corners it lies more nearly parallel to the stem of the auger than at any other part, which tends to smooth the walls of the hole. This tool while very serviceable for cross grain is especially advantageous for the end grain of the wood.

In the smaller sizes of auger bits the twist of the spiral is made coarser, as in Fig. 1767, which is necessary to provide sufficient strength to the tool. For the larger sizes the width of the top of

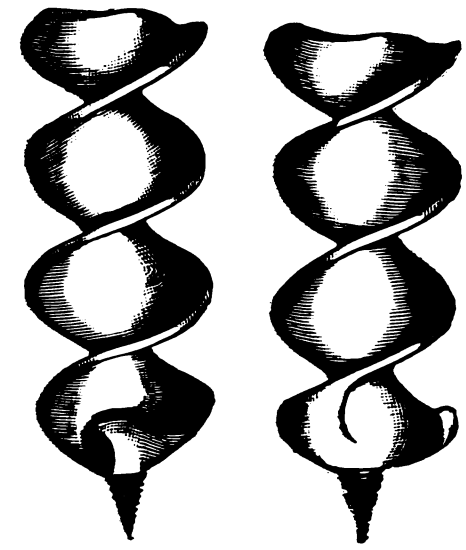

Fig. 1766.

Fig. 1767.

the flute (T, Fig. 1765), or the land, as it is termed, is made narrow, as in Fig. 1768, for holes not requiring to be very exact in their straightness, while for holes requiring to be straight and smooth they are made wider, as at D, in Fig. 1769, and the wings A,B in the figure extend farther up the flutes so as to steady the tool in the walls of the hole and make them smoother. It is obvious that the conical screw requires to force or wedge itself into the wood, which in thin work is apt to split the wood, especially when it is provided with a double thread as it usually is (the top

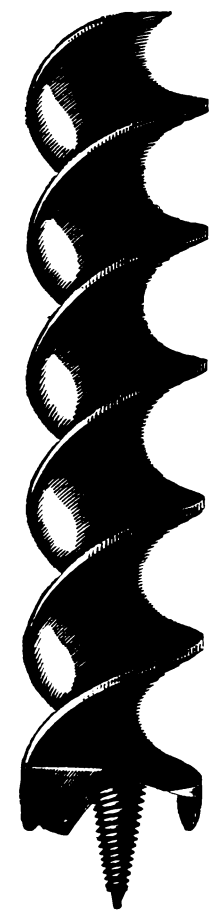

Fig. 1768.

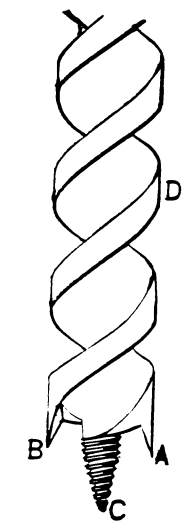

Fig. 1769.

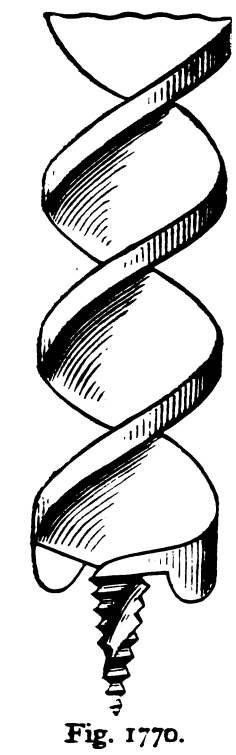

Fig. 1770.

of one thread meeting the cutting edge A in Fig. 1765, while the top of the other thread meets cutting edge B).

In boring end-grain wood, or in other words lengthways of the grain of the wood, the thread is very apt to strip or pull out of the wood and clog the screw of the auger; especially is this the case in hard woods. This may be to a great extent avoided by cutting a spiral flute or groove along the thread, as in Fig. 1770, which enables the screw to cut its way into the wood on first

starting, acts to obviate the stripping and affords an easy means of cleaning. The groove also enables the screw to cut its way through knots and enables the auger to bore straight.

In boring holes that are parallel with the grain or fibre of the

Fig. 1771.

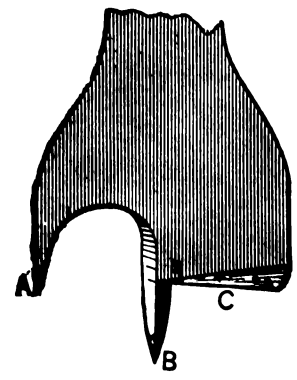

Fig. 1772.

wood, much more pressure is required to keep the auger up to its cut and to prevent the thread cut by the auger point from pulling or stripping out of the wood, in which case it clogs the thread of the auger point and is very difficult to clean it out, especially in the case of hard woods.

Furthermore, after the thread has once stripped it is quite difficult to force the auger to start its cut again. To obviate these difficulties the screw is fluted as shown. It is obvious also that this flute by imparting a certain amount of cutting action, and thereby lessening the wedging action of the screw, enables it to bore, without splitting it, thinner work than the ordinary auger. But it will split very thin work nevertheless; hence

Fig. 1773.

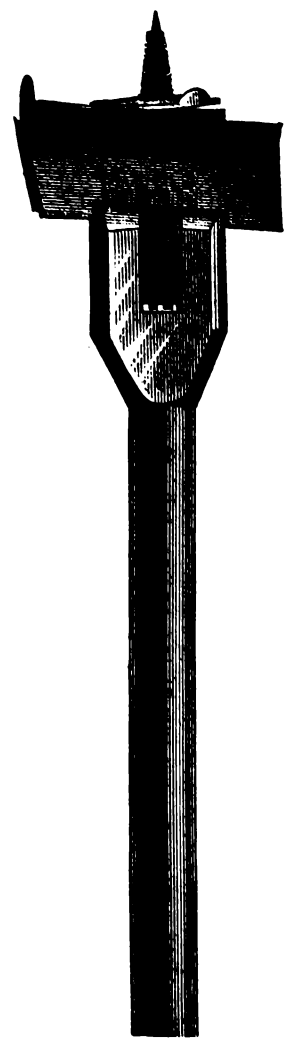

Fig. 1774.

for such work as well as for holes in any kind of wood, when the hole does not require to be more than about twice as deep as that diameter, the centre bit shown in Figs. 1771 and 1772 is employed, being an excellent tool either for boring with the grain or across it. The centre B is triangular and therefore cuts its way into the work, and the spur or wing A extends lower than the cutting edge C, which on account of its angle cuts very keenly.

Fig. 1773 represents the twist drill which is used by the wood-worker for drilling iron, its end being squared to fit the carpenter's brace.

Fig. 1774 represents an extension bit, being adjustable for

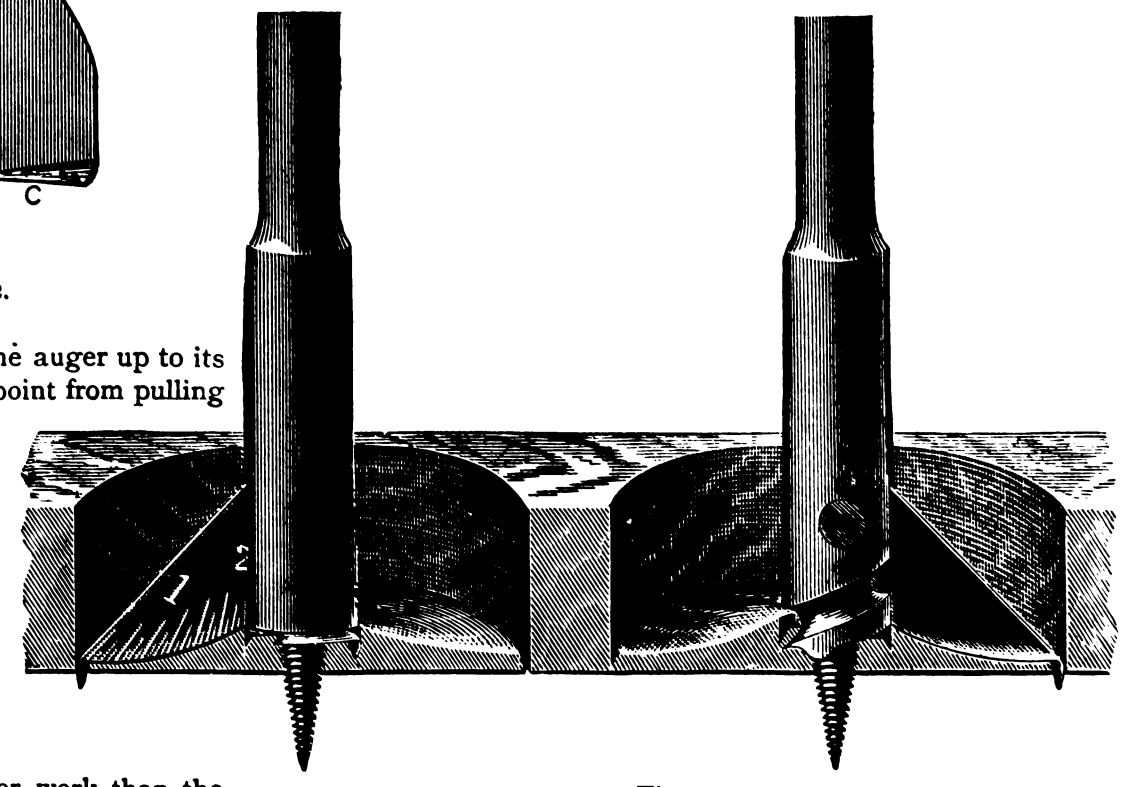

Fig. 1775.

diameter by reason of having its cutting edge upon a piece that can be moved endways in the holder or stem. This piece is ruled with lines on its face so that it may be set to the required size. Its upper edge is serrated with notches into which a dish screw or worm meshes, so that by revolving the worm the bit piece is moved farther out on the spur or wing side or end, it being obvious that the spur must meet the walls of the hole. A better form of extension bit for the end grain of wood is shown in Fig. 1775, the cutting edge being a curve to adapt it to severing the fibre in end-grained wood, as was explained with reference to Good's auger bit.

Fig. 1776 represents a drill for stone work, whose edge is made curved to steady it. This tool is caused to cut by hammer blows, being slightly revolved upon its axis after each blow, hence the curved shape of its cutting edge causes it to sink a dish-shaped recess in the work which holds that end steady. The end of the tool is spread because the corners are subject to rapid wear,

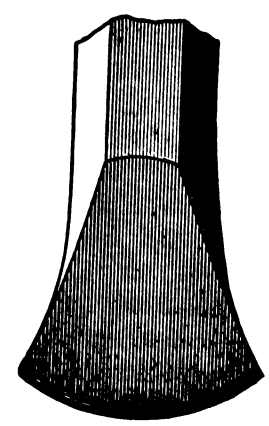

Fig. 1776.

especially when used upon hard stone, and the sides of the drill would bend or jam in the walls of the hole in the absence of the clearance caused by the spread. To prevent undue abrasion water is used.

In soft stones the hammer blows must be delivered lightly or the cutting edge will produce corrugations in the seat or bottom of the hole, and falling into the same recesses when revolved after each blow the chipping action is impaired and finally ceases. To

prevent this the cutting edge is sometimes curved in its length so that the indentations cross each other as the drill is revolved, which greatly increases the capacity of the drill, but is harder to forge and to grind.

The simplest hand-drilling device employed for metal is the fiddle bow drill shown in Fig. 1777. It consists of an elastic bow B, having a cord C, which passes around the reel R, at one end of which is the drill D, and at the other a stem having a conical or centre point fitting into a conical recess in a curved breast-

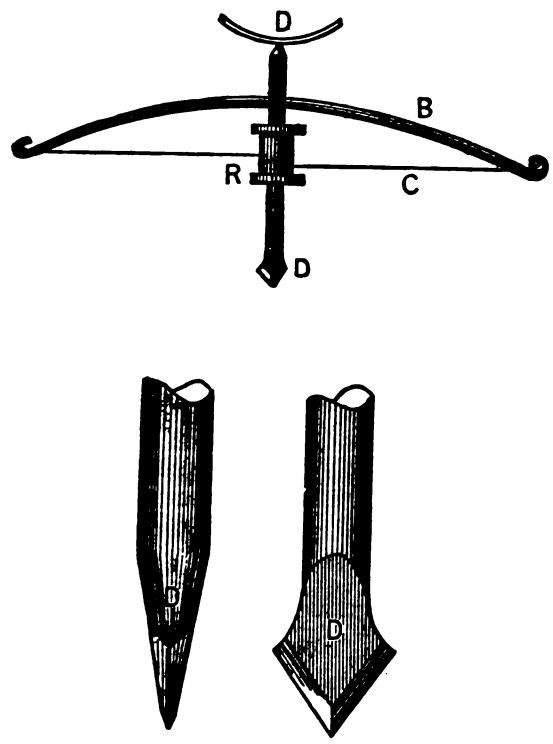

Fig. 1777.

plate. The operator presses against this plate to force the drill to cut, and by moving the bow back and forth the cord revolves the drill.

As the direction of drill revolution is reversed at each passage of the bow, its cutting edges must be formed so as to cut when revolved in either direction, the shape necessary to accomplish this being shown in the enlarged side and edge views at the foot of the engraving. It is obvious that a device of this kind is suitable for small holes only, as, say, those having a diameter of one-eighth inch or less. But for these sizes it is an excellent tool, since it is light and very sensitive to the drill pressure, and the operator can regulate the amount of pressure to suit the resistance

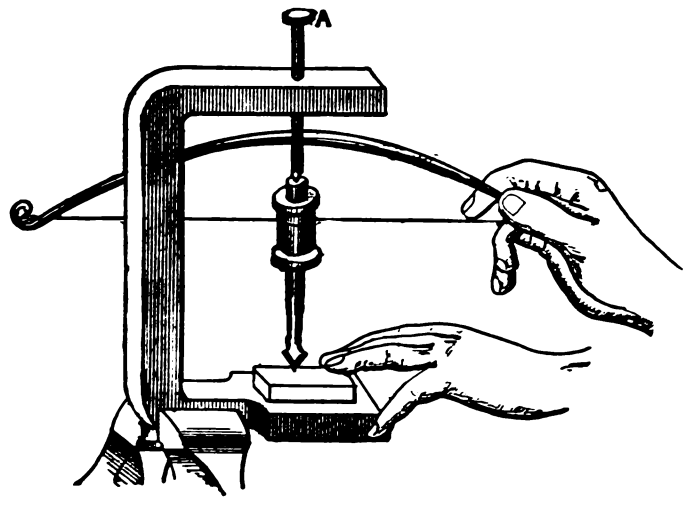

Fig. 1778.

offered to the drill, and therefore prevent the drill from breakage by reason of excessive feed. In place of the breast-plate the bow drill may be used with a frame, such as in Fig. 1778. the frame being gripped in a vice and having a pin or screw A. If a pin be used, its weight may give the feed, or it may be pressed down by the fingers, while if a screw is used it must be revolved occasionally to put on the feed.

Fig. 1779 represents a hand-drilling device in which the cord passes around a drum containing a coiled spring which winds up the cord, the latter passing around the drill spindle, so that pulling the cord revolves the spindle and the drill, the drum and spiral spring revolving the drill backwards.

Fig. 1780 represents a drilling device in which the drill is carried in a chuck on the end of the spindle which has right and left spiral grooves in it, and is provided with a barrel-shaped nut,

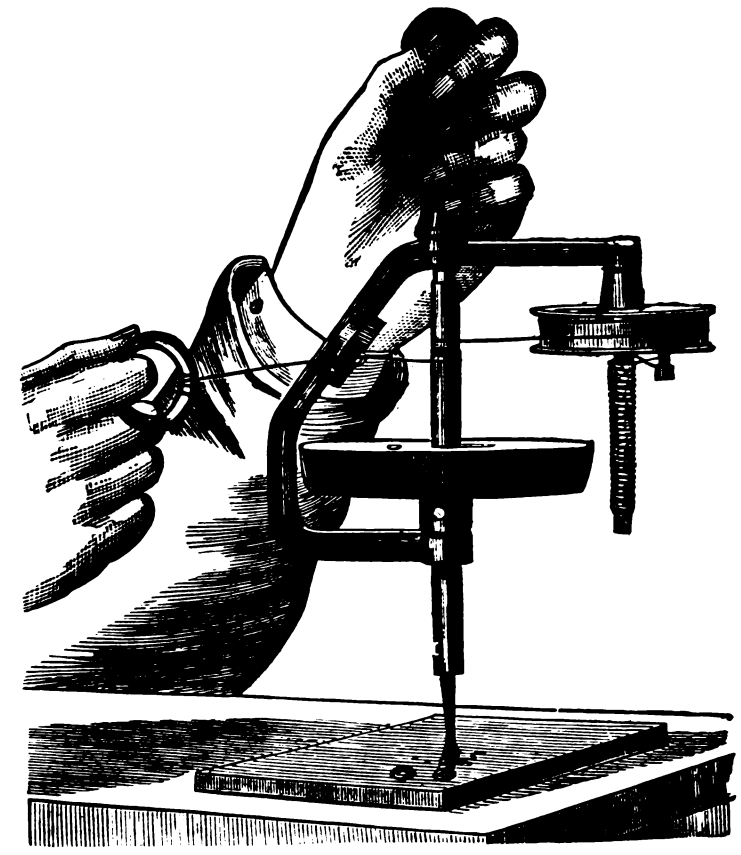

Fig. 1779.

which when operated up and down the spindle causes it to revolve back and forth.

The nut or slide carries at one hand a right-hand, and at the other a left-hand nut fitting into the spindle grooves, and cut like a ratchet on their faces. Between these is a sleeve, also ratchet cut, but sufficiently short that when one nut engages, the other is

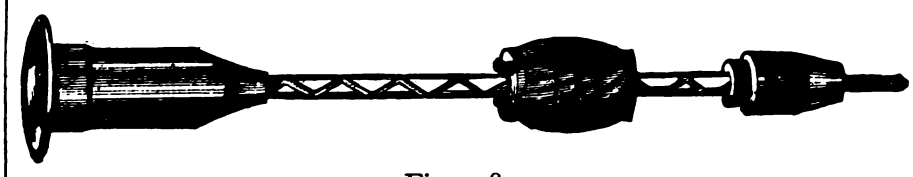

Fig. 1780.

released, with the result that the drill is revolved in one continuous direction instead of back and forth, and can therefore be shaped as an ordinary flat drill instead of as was shown in Fig. 1777. The drill is fed to its cut by hand pressure on the handle or knob at the top.

Fig. 1781 represents Backus' brace for driving bits, augers, &c., the construction of the chuck being shown in Fig. 1782.

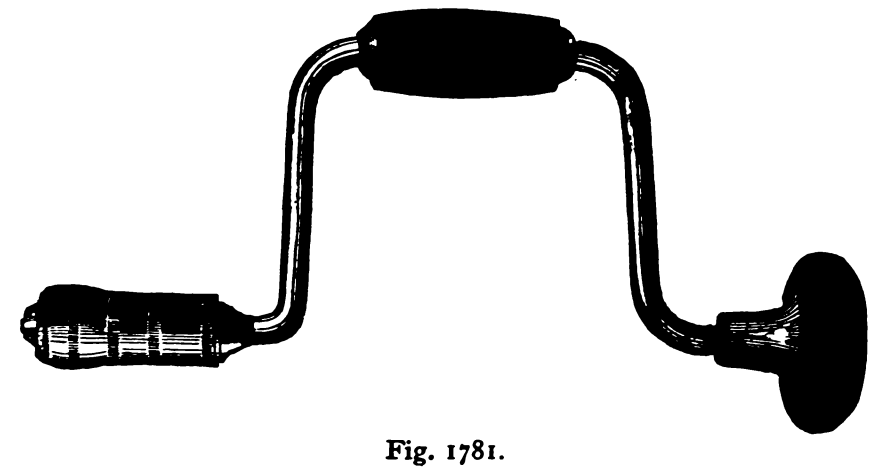

Fig. 1781.

The two tongues are held at their inner ends by springs and are coned at their outer ends, there being a corresponding cone in the threaded sleeve, so that screwing up this sleeve firmly grips the tool shank and thus holds it true, independent of the squared end which fits into the inner tongue that drives it.

In another form this brace is supplied with a ratchet between

the chuck and the cranked handle, as shown in Fig. 1783, the construction of the ratchet being shown in Fig. 1784. The ring is provided on its inner edge with three notches, so that by pulling it back and setting it in the required notch the ratchet will operate

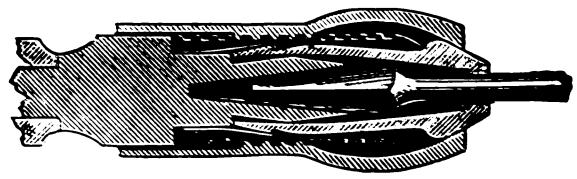

Fig. 1782.

the chuck in either direction or lock it for use as an ordinary brace. The ratchet enables the tool to be used in a corner in which there would be no room to turn the crank a full revolution. This end may, however, be better accomplished by means of the

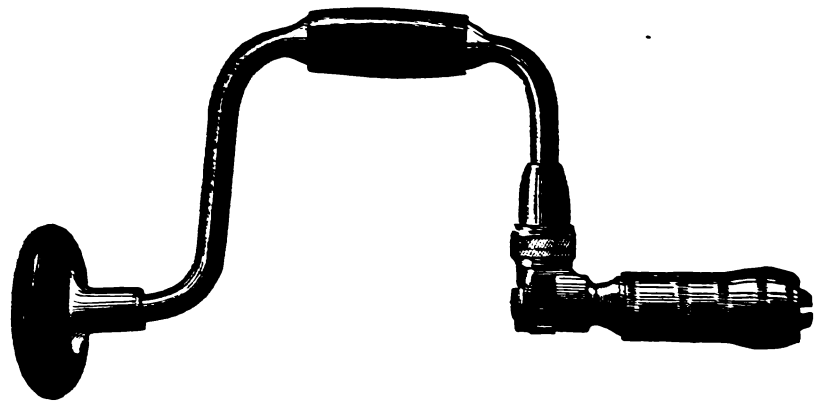

Fig. 1783.

Backus' patent angular wrench shown in Fig. 1785, which consists of a frame carrying a ball-and-socket joint between it and the chuck, as shown.

Figs. 1786 and 1787 represent the brace arranged to have a

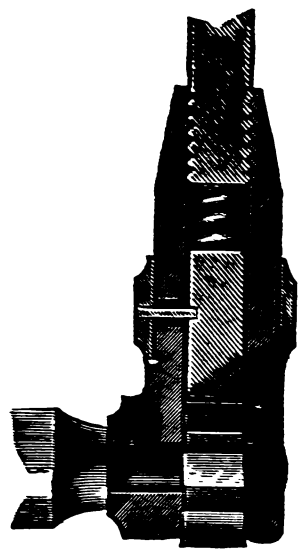

Fig. 1784.

gear-wheel connected or disconnected at will, the object of this addition being to enable a quick speed to the chuck when the same is advantageous.

For drilling small holes in metal, the breast drill shown in Fig.

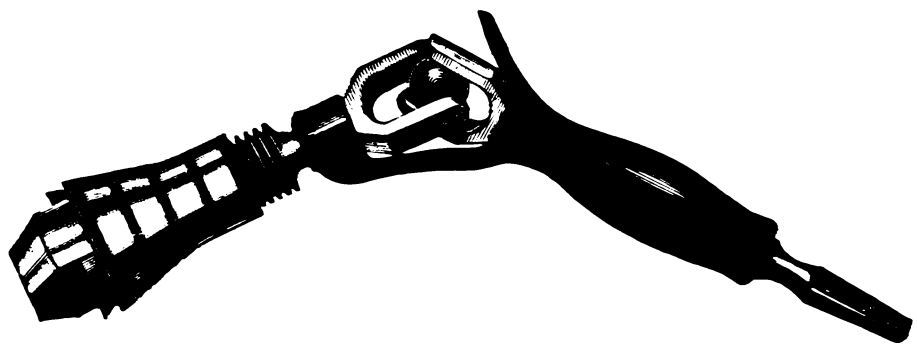

Fig. 1785.

1788 is employed. It consists of a spindle having journal bearing in a breast-plate at the head, and in a frame carrying a bevel gear-wheel engaging with two gear-pinions that are fast upon the spindle, this frame and the bevel gear-wheel being steadied by the handle shown on the right. At the lower end of the spindle is a chuck for holding and driving the drill, which is obviously

Fig. 1786.

operated by revolving the handled crank which is fast upon the large bevel gear. The feed is put on by pressing the body against the breast-plate.

It is obvious that but one bevel pinion would serve, but it is

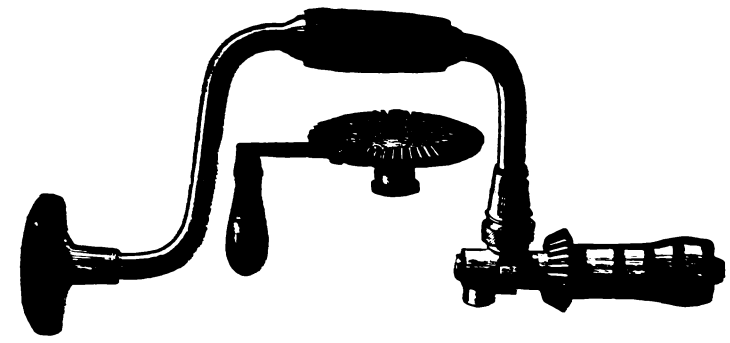

Fig. 1787.

found that if one only is used the spindle is apt to wear so as to run out of true, and the bore of the gear-wheel rapidly enlarges from the strain falling on one side only. To avoid this the spindle

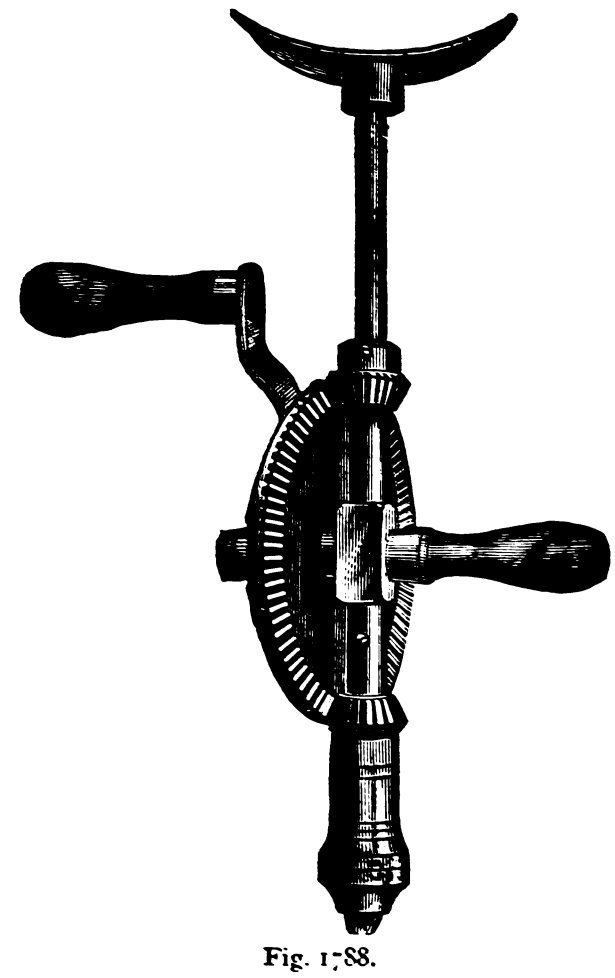

Fig. 1788.

is driven by two pinions, one on each side of the driving gear as in figure.

Breast-drills do not possess enough driving power to capacitate them for drills of above about quarter inch in diameter, for which various forms of drill cranks are employed.

Fig. 1789 represents a drill crank which receives the drill at A, and is threaded at B to receive a feed screw C, which is pointed at D; at E is a loose tube or sleeve that prevents the crank from rubbing in the operator's hands when it is revolved.

To use such a drill crank a frame A, Fig. 1790, is employed, being held in a vice and having at T a table whereon the work W may be rested. The feed is put on by unscrewing the screw

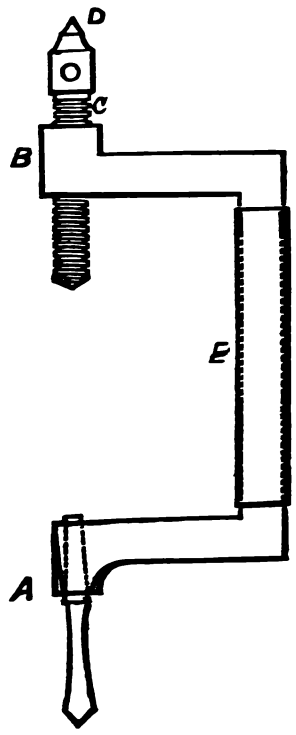

Fig. 1789.

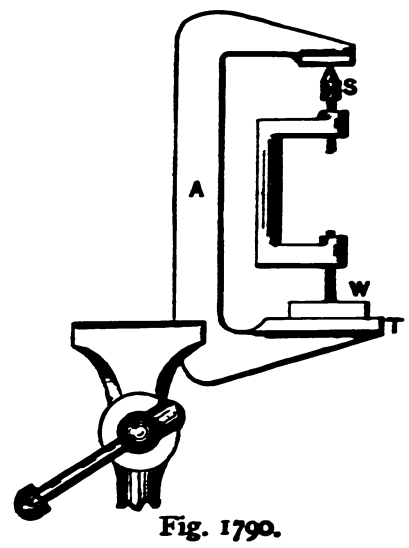

Fig. 1790.

S in this figure against the upper jaws of A; holes of about half inch and less in diameter may be drilled with this device.

A very old but a very excellent device for hand drilling when no drilling machine is at hand is the drilling frame shown in Fig. 1791, which consists of two upright posts A, and two B, placed side by side with space enough between them to receive and guide the fulcrum lever and the lifting lever. The fulcrum lever is pivoted at C, and has an iron plate at E, and suspends a weight at its end which serves to put on the feed. The lifting lever is pivoted at D, and at F hooks on to the fulcrum lever. At its other end is a rope and eye G, and it is obvious that the effect of the weight upon the fulcrum lever is offset by any pressure applied to G, so that by applying the operator's foot at G the weight of drill feed may be regulated to suit the size of hole and strength of drill being used. The work is rested on a bench, and a drill

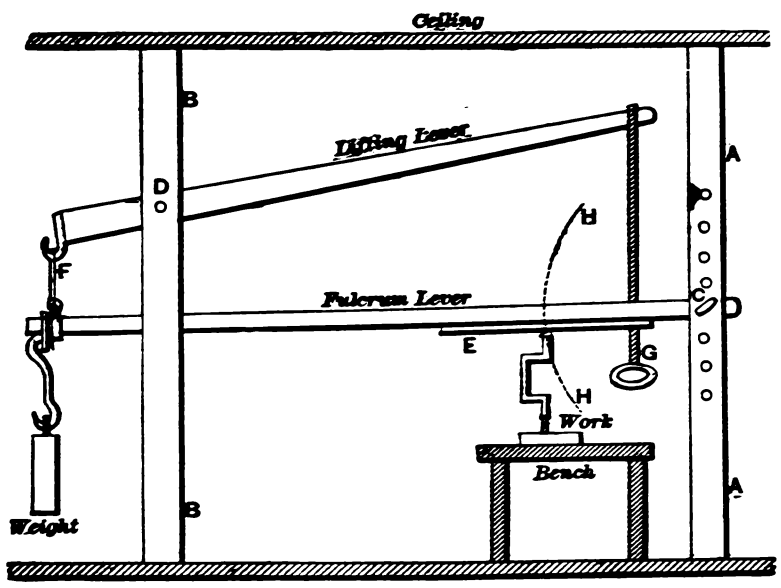

Fig. 1791.

crank or other device such as a ratchet brace may be used to drive the drill. This drill frame is capable of drilling holes up to about two inches in diameter, but it possesses the fault that the upper end of the brace or drilling device moves as the drill passes into the work in an arc H of a circle, of which the pin C is the centre. The posts A are provided with numerous holes for the pin C, so that the fulcrum lever may be raised or lowered at that end to suit the height of the work above the work bench. Another objection to this device is, it takes up a good deal of shop room.

Ratchet braces are employed to drill holes that are of too large a bore to be drilled by tread drills, and that cannot be conveniently taken to a drilling machine.

In Fig. 1792 is represented a self-feeding ratchet brace. A is the body of the brace, having a taper square hole in its end to receive the square shank of the drill. L is a lever pivoted upon A, and having a pawl or catch B, which acts upon ratchet teeth provided upon A. When the lever L is moved backward the pawl B being pivoted rides over the ratchet teeth, but when L is pulled forward B engages the ratchet teeth and rotates A and therefore the drill. At F is a screw threaded into A, its pointed end abutting against some firm piece, so that unscrewing F forces the drill forward and into its cut. These features are essential to all forms of ratchet braces, but the peculiar feature of this brace consists in its exceedingly simple self-feeding devices, the feed screw F requiring in ordinary braces to be operated by hand when the drill requires to be fed.

The construction and operation of the self-feeding device is as follows: The feed screw F is provided with a feather way or spline and with a feed collar C, operated by the pawl E. The feed-collar C has at D a groove, into which a flange on pawl E fits, and on its side face there is a groove receiving an annular ring on the face of lever L, these two keeping it in place. The pawl E is a

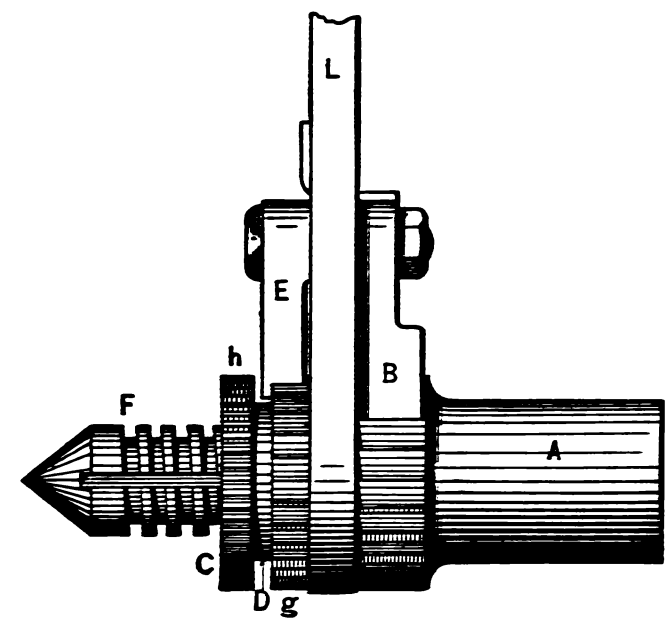

Fig. 1792.

double one, and may be tripped to operate C in opposite directions to feed or release the drill, as the case may be, or it may be placed in hind position to throw the feed off—all these operations being easily performed while the lever L is in motion. Collar C is in effect a double ratchet, since its circumference is provided with two sets of notches, one at *g* and the other at *h*. Each set is equally spaced around the circumference, but one set or circle is coarser spaced than the other, while both are finer spaced than is the ratchet operated by pawl B. Suppose, now, that the lever L is at the end of a back stroke, and pawl E will fall into one of the notches on side *g* of the feed-ratchet, and when lever L is moved on its forward stroke it will operate the feed ratchet and move it forward, A standing still until such time as pawl B meets a tooth of the ratchet on A. The feed screw F is provided with a left-hand thread, and the feed ratchet has a feather projecting into the spline in the feed screw; hence moving the feed ratchet at the beginning of the forward motion of L and before A is operated, puts a feed on, and the amount of this feed depends upon how much finer the notches into which pawl E falls are than those into which B falls. The feed takes place, be it noted, at the beginning of the lever stroke, and ceases so soon as pawl B operates A and the drill begins to cut.

As shown in the figure, the feed collar is set for large drills (which will stand a coarser feed than small ones), because the notches are finer spaced at *g* than at *h*. For small drills and finer feeds the collar is slipped off the screw and reversed so that

side *k* will fall under E, it being obvious that the finer the notches are spaced the more feed is put on per stroke. The spacings are made to suit very moderate feeds, both for large and small drills, because the operator can increase the feed at any stroke quite independently of the spacings on the feed ratchet. All he has to do is to give the lever handle a short stroke and more feed is put on; if still more feed is wanted, another short stroke may be made, and so on, the least possible amount of feed being put on when the longest strokes are made. In any event, however, there will be a certain amount of average feed per stroke if equal length of strokes is taken, the spacing being made to suit such ordinary variations of stroke as are met with in every-day practice. When

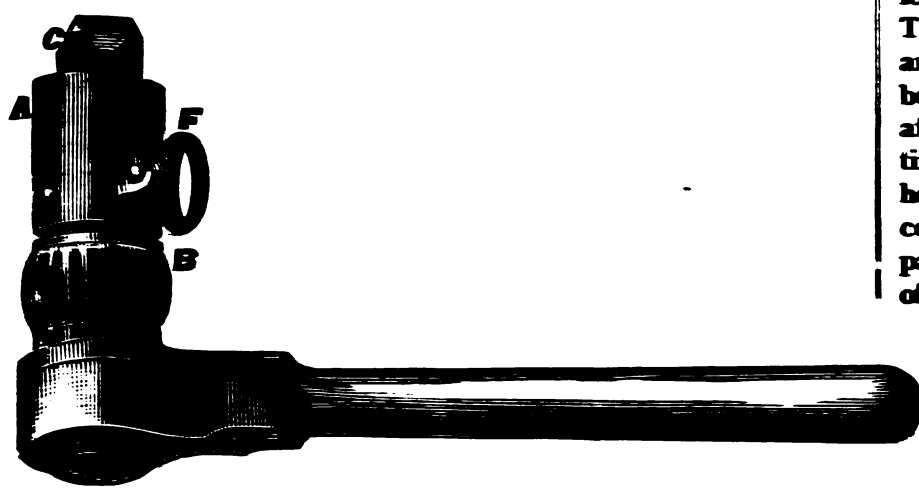

Fig. 1793.

it is desired to stop feeding altogether, or to release the drill entirely from the cut, all that is necessary is to trip the feed-pawl E (without stopping the lever motion), and it will operate the feed screw in the opposite direction sufficiently to release the drill in a single backward stroke of the lever. The range of feed that is obtainable with a single feed ratchet is sufficient for all practical purposes, although it is obvious that if any special purpose should require it, a special feed ratchet may be made to suit either an unusually fine or coarse rate of feed. The feed screw is not provided with either a squared head or with the usual pin holes, because the feed ratchet is so readily operated that these, with their accompanying wrench or pin, are unnecessary.

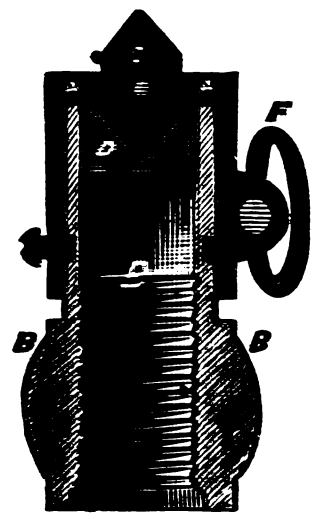

Fig. 1794.

Figs. 1793 and 1794 represent a self-feeding ratchet brace for hand drilling in which the feed is obtained as follows: The inside or feed sleeve B, which screws upon the drill spindle, is fitted with a friction or outer sleeve A, in the head of which is secured a steel chisel-shaped pin C, the lower end of which is pointed and rests upon a hardened steel bearing D, fixed in the head of the inner sleeve B. This sleeve, with its bearing D, revolves upon the point of the pin C, and within the friction sleeve A. Having thus described its construction, we will now describe the operation of the self-feeding device. The head of the pin C being chisel-shaped, prevents the pin and the outer sleeve A from revolving. If the thumb or friction screw F is unscrewed, it will permit the inner sleeve B to rotate freely upon the bearing of pin C, and within the friction sleeve A. As the screw F is tightened, the friction upon the inner sleeve B is increased, causing it to remain stationary, and consequently causing the screw on the drill spindle to feed the drill until the friction on the drill becomes greater than the friction on the sleeve B. This then commences to rotate again within the outer sleeve A, and continues until the chip which the drill has commenced to cut is finished, when the same operation is repeated, thus giving a continuous feed, capable of being instantly adjusted to feed fast or slow as desired, by tightening or loosening the friction screw F, thereby causing a greater or less friction upon the inside or feed sleeve B.

To afford a fulcrum or point of resistance for the chisel-piece C, or the pointed centre used in the common forms of ratchet brace feed screws, various supporting arms, or stands are employed. Thus Fig. 1795* represents a boiler shell *a*, to which is attached an angle frame or knee *b*, carrying the angle piece *c* (which may be adjusted for vertical height on *b* by means of the bolt shown) affording a fulcrum for the feed sleeve *d*. This sleeve is sometimes made hexagonal on its outside to receive a wrench or to be held by the hand when feeding, or it may have holes near its centre end to receive a small pin or piece of wire; *e* is a chain to pass around the boiler to secure *b* to it, which is done by means of the device at *f*.

For many purposes a simple stand having an upright cylindrical bar carrying an arm that may be set at any height and set to its required position on the bar by a set-screw is sufficient, the base of the stand being secured to the work by a clamp or other convenient device.

Fig. 1796 represents a flexible shaft for drilling holes inaccessible to a drilling machine, and in situations or under

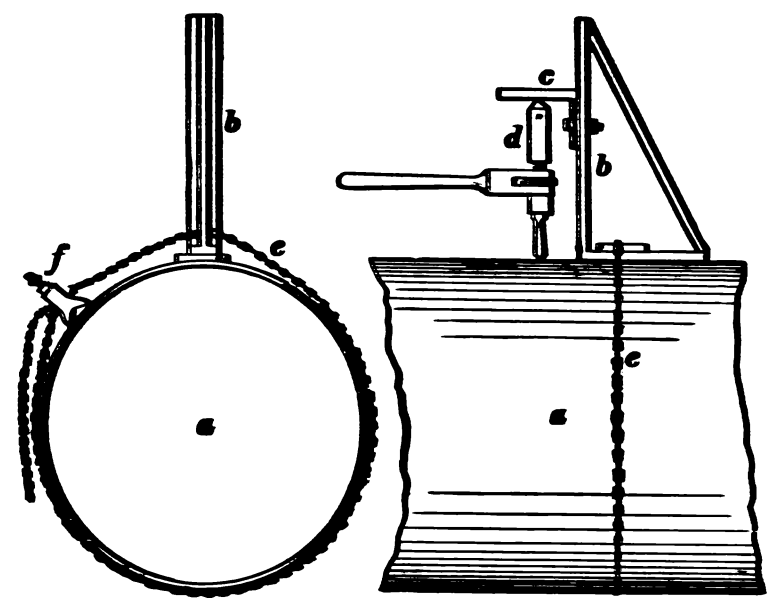

Fig. 1795.

conditions under which a ratchet brace would otherwise require to be used. It consists of a shaft so constructed as to be capable of transmitting rotary motion though the shaft be bent to any curve or angle. A round belt driven from a line shaft rotates the grooved pulley, and the shaft transmits the rotary motion to bevel-wheels contained in a portable drilling frame, the fulcrum for the feed being afforded by a drilling post after the manner employed in ratchet drilling. The shaft is built up of several layers of wire (as shown in the view to the left), the number of layers depending upon the size and strength of shaft required, wound one upon the other helically. The layers are put on in groups of three to eight wires, parallel to each other, each successive layer containing groups of varying numbers of wires, thus giving a different pitch to the helices for each layer, the direction of each twist or helix being the reverse of the one upon which it is wound. When the shaft is laid up in this manner, the wires at each end for a short distance are brazed solidly together, and to these solidified ends the piercers are secured for the attachment of the pulley and tool which it is to drive.

This construction, it will be readily seen, produces a shaft which will have considerable transverse elasticity, while it must necessarily offer great resistance to torsional strain, the reversed

helices forming a kind of helical trussing, which effectually braces it against torsion. The case within which it turns is simply an elastic tube of leather or other suitable material, within which is wound a single helix of wire fitting its inside tightly, the inside diameter of the helix being a little greater than the outside diameter of the shaft, and wound in a contrary direction to the outer helices of the shaft. This forms a continuous bearing for the shaft; or at least serves as a bearing at the points of contact between the shaft and case which are brought about in the various bending of the whole when in use.

In order to give to the instrument all the transverse elasticity possible, that end of the shaft carrying the pulley is made with a feather so that it may slide endways in the pulley, while the latter is secured to the case, the case, however, not rotating with it. It will be readily seen that this is a necessary precaution, inasmuch as in the varying curves given to the instrument in use a difference will occur in the relative lengths of the shaft and tube.

It might be supposed that the friction of the shaft within the tube would be so considerable as to militate against the success of the apparatus; but in practice, and under test for the determination of this, it has been found that the friction generated by running it when bent at a right angle does not exceed that when used in a straight line more than 15 per cent. of the latter.

In the running of it in a bent position, not only will there be friction between the shaft and tube, but there must also be some little motion of the layers of wire one upon another in the shaft itself; and to provide against the wear and friction which would otherwise occur in this way, provision is made for not only oiling the bearings at the ends, but also for confining a small quantity of oil within the tube, by which all motion of the wires upon one another, or the shaft upon the interior of the tube, is made easy by its being well lubricated.

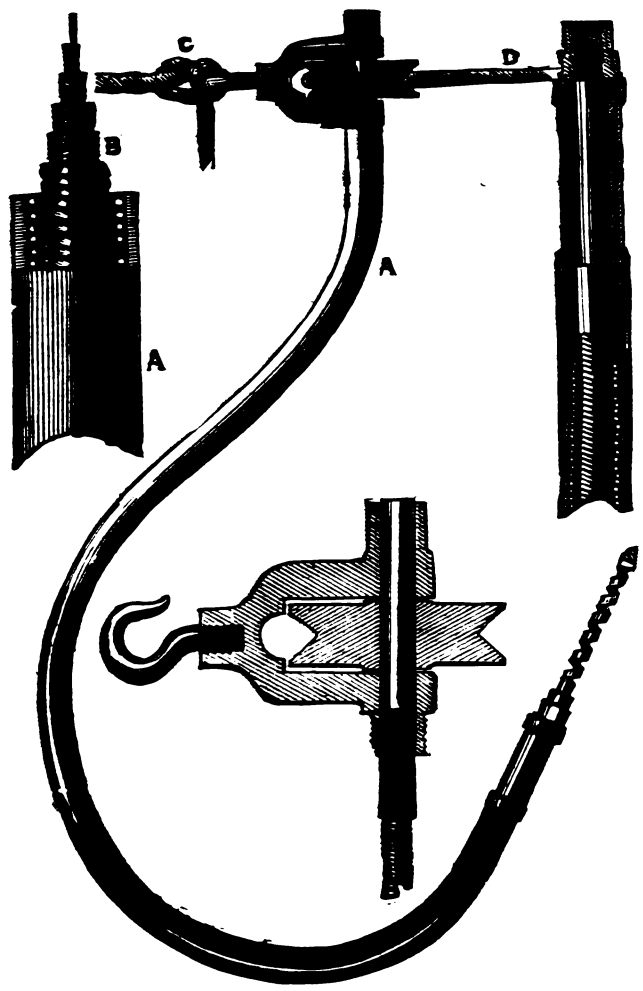

Fig. 1796.

In the figure the shaft is shown complete with a wood-boring auger in place at the shaft end. Shafts of similar but very light construction are employed by dentists for driving their dental drills and plugging tools, many of them having ingenious mechanical movements derived from the rotary motion of the shaft.

In Fig. 1797 is represented a drilling device in position for drilling a hole from the inside of a steam boiler. A represents a base piece made with a journal stud *b*. This base piece is provided with radial arms *a*, with threaded ends and nuts made with conical projecting ends, as shown at a^2. One of these pieces is used at each end of the machine when convenient, their use for centring and holding the frame being apparent. When not convenient to use two of them, one end of the frame is sustained as shown in the engraving, or in some other manner

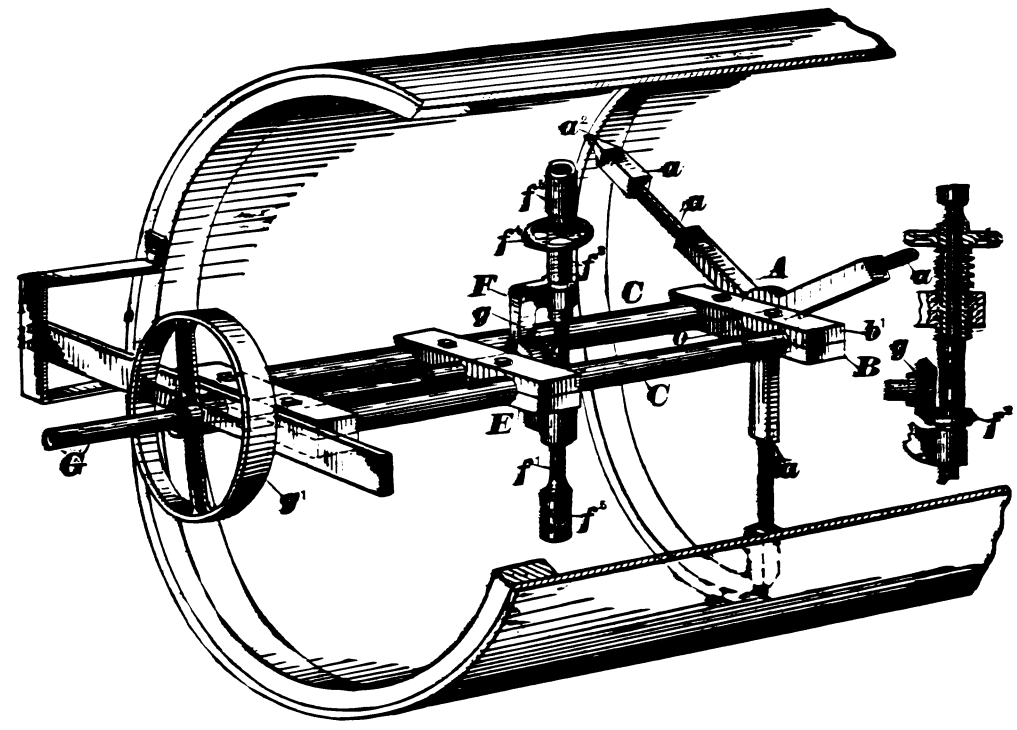

Fig. 1797.

that may suggest itself. The casting B is made in two pieces, and is provided with a bearing for the pin *b*, and holds the ends of the rods C C. The actuating shaft G carries the bevel-wheel *g*, more clearly seen in the figure at side, which drives the drill spindle, whose ends are of different lengths, for convenience in reaching to different distances. The cross-head E may be slid along as required on the rods, and the revolving frame and drill turned around to different positions.

Fig. 1798 represents a small hand drilling machine to be fastened to a work bench. A suitable frame affords journal bearing to the upright spindle, upon which is a bevel-gear G,

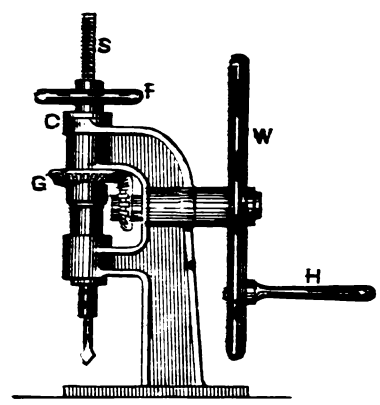

Fig. 1798.

which is driven by a gear upon the same shaft as the wheel W. The spindle is threaded at S and is fed by the hand wheel F. which is threaded upon the screw S and has journal bearing in the cap C.

Fig. 1799 represents a hand drilling machine for fixture against a post, the larger wheel serving as a fly-wheel and the smaller one being to feed with.

SLOTTING MACHINE.—In the slotting machine the cutting tools are carried in a ram or slide that operates vertically, and the work table lies horizontal and beneath the ram.

Fig. 1800 represents a slotting machine, and Fig. 1801 is a sectional view of the same machine.

The cone spindle shaft has a pinion which drives a spur-wheel

upon an horizontal shaft above. Upon the inside face of this spur gear is a cam groove for operating the feed motions; at the other end of the shaft is a Whitworth quick-return motion, such as has already been described with reference to shaping machines. The connecting rod from the quick-return motion attaches to the ram, which operates on a guide passing through a way provided at the

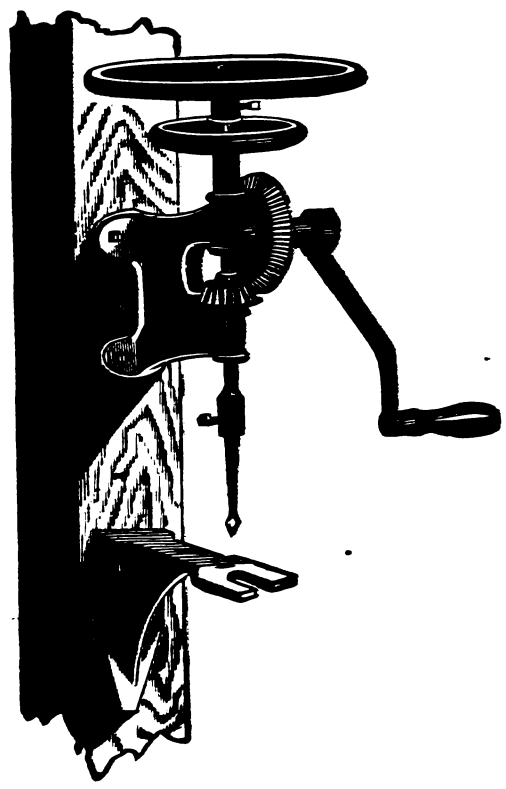

Fig. 1799.

upper end of the main frame, and bolting to the front face of the main body of the frame. The object of this arrangement is that by adjusting the height of this guide to suit the height of the work, the ram will be guided as close to the top of the work as the height of the latter will permit; whereas, when the guide for the ram is fixed in position on the frame the ram passes as far through the guide when doing this as it does when doing thick

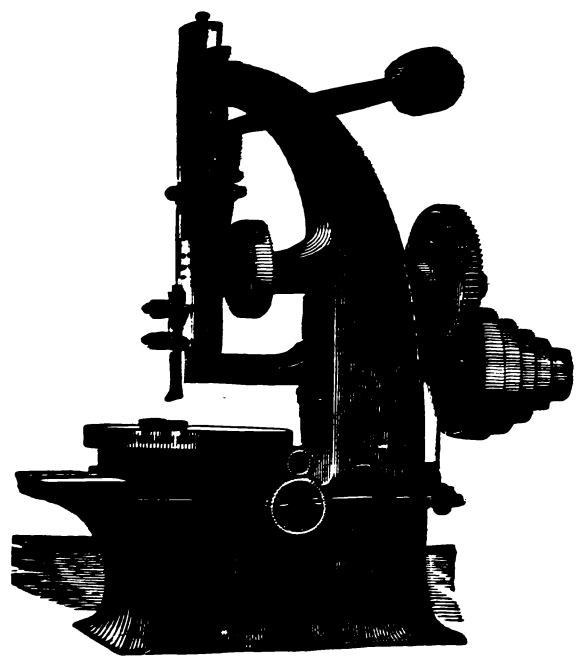

Fig. 1800.

work, and is therefore less closely guided than is necessary so far as the work is concerned.

The ram, or slotting bar, as it is sometimes termed, is counterbalanced by the weighted lever shown, so that the ram is always held up, and there is no jump when the tool post meets the work, because the tool motion is always taken up by the lever.

The work is held upon a circular table capable of being revolved upon its axis to feed the work to the cut. This table is carried upon a compound slide having two horizontal motions, one at a right angle to the other. The lower of these is operated by a rod running through the centre of the machine, as seen in the sectional view in Fig. 1801. The upper is operated through the larger of the two gear-wheels, seen at the side of the machine in the general view of the machine in Fig. 1800. The upper and smaller of these wheels operates a worm, which engages with worm-teeth cut on the periphery of the circular table to rotate the latter. Either or all of these feed motions may be put in simultaneous action, or all may be thrown out and the feeds operated by hand.

Much of the work formerly allotted to the slotting machine is now performed on what are known as key-seating machines, which are quite equal to it in capacity so far as the cutting of keyways or other small slots or grooves are concerned; but the slotting machine still maintains its important field of operations so far as general work is concerned. Thus circular work can be finished by the use of the circular table alone; curved work can be cut to any shape by operating its two lower tables simultaneously and so regulating the motion of the respective tables by hand as to conform to the curved or irregular shape required on the work.

Small curves are obviously produced by forming the cutting edge

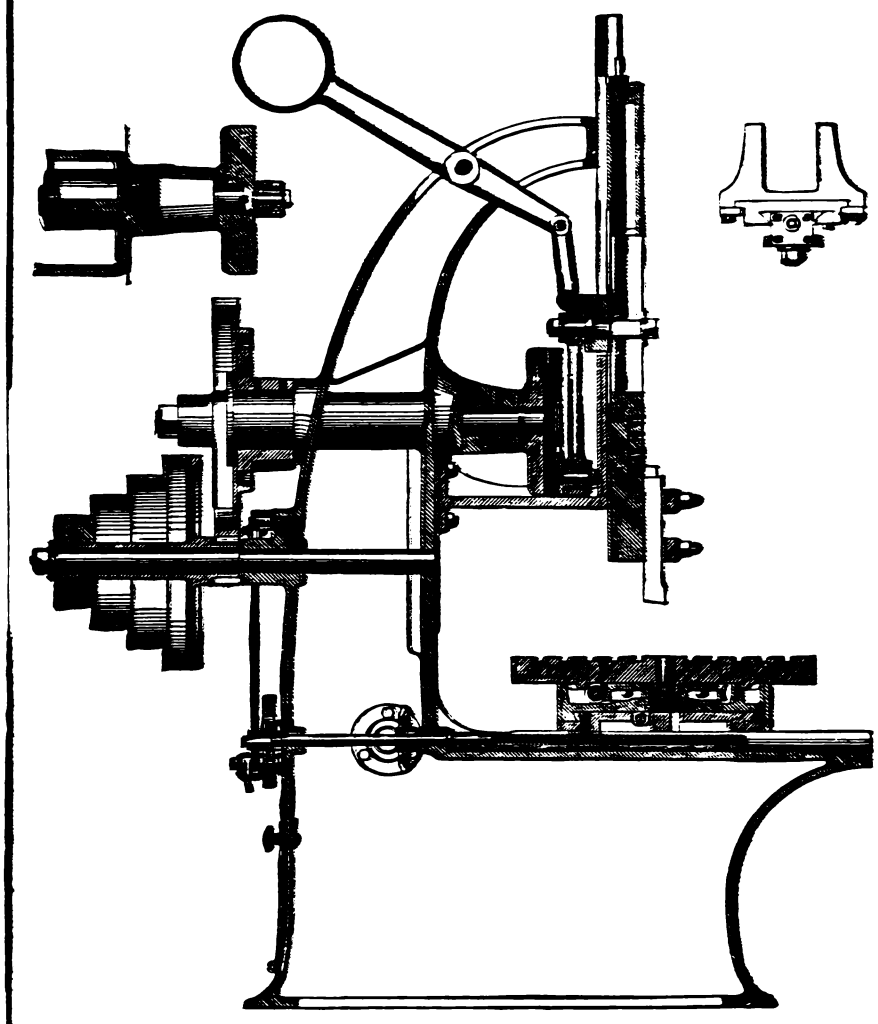

Fig. 1801.

of the tool to the required shape, the limit of width of tool cutting edge being governed by the fact, which is common to all machine tools, that chatters or waves will be produced on the work if the cutting edge of the tool is held far out from the tool post, or if the tool carrying slide requires to be moved too far out from its bearings or guides.

A slotting and paring machine, having patent relief motion, constructed by the Putnam Machine Company, is shown in Plates CVII. and CVIII., Fig. 1082 being a general view, and the remaining figures the details. The relief motion for preventing the cutting edge of the tool from rubbing against the cut on the upward or back stroke is obtained by a screw of quick pitch, which works in a nut tapped into the front end of the bed. This screw is worked by a cam on the driving shaft, which operates the rocker arm L. Through the side rod motion is given to the horizontal shaft which carries another arm on the end. A screw and a nut working in a T-slot connects to the arm C on the screw, and turns it on each stroke of the ram, thus carrying the table, and work attached, to or from the tool.

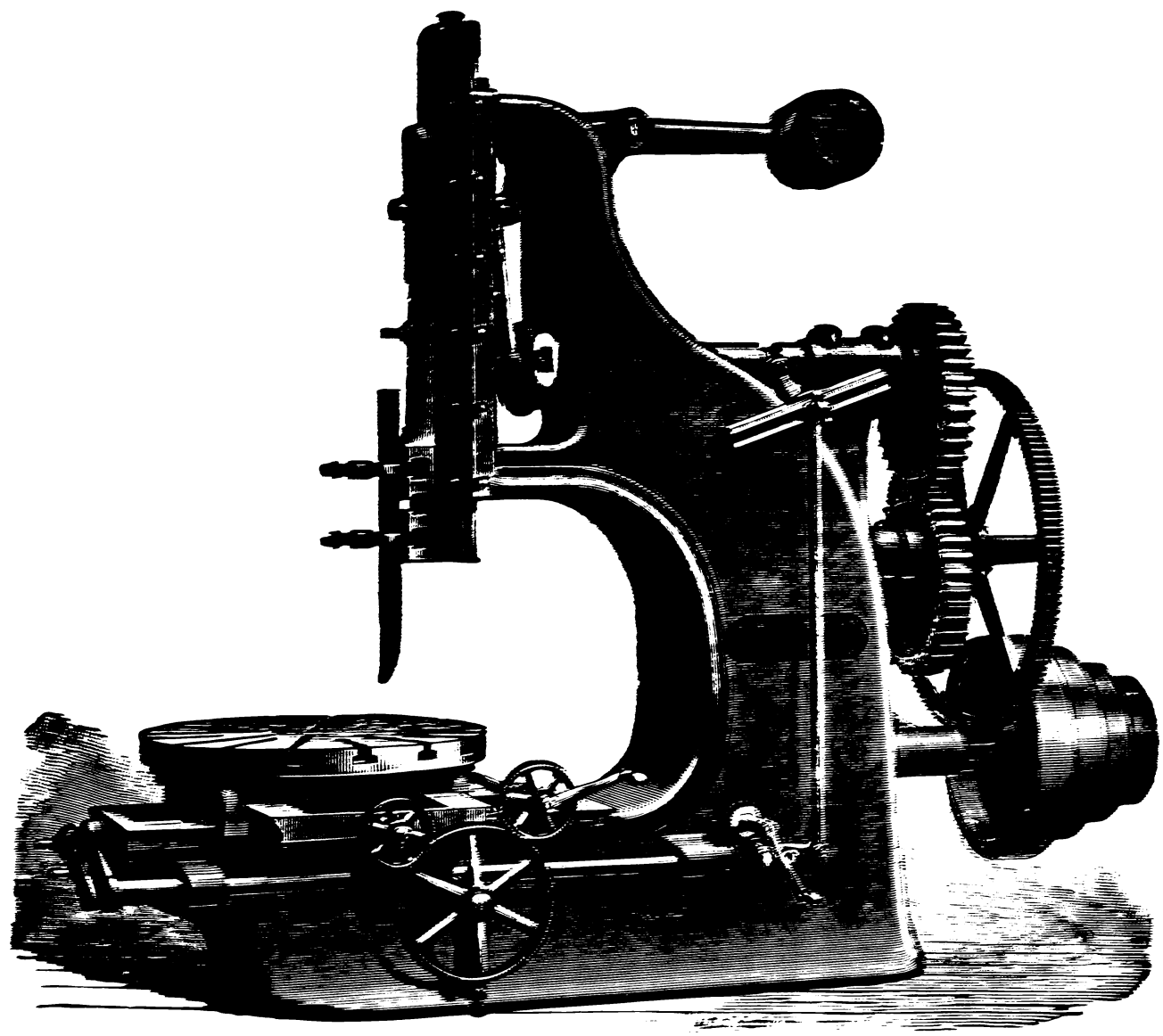

Fig. [illegible]

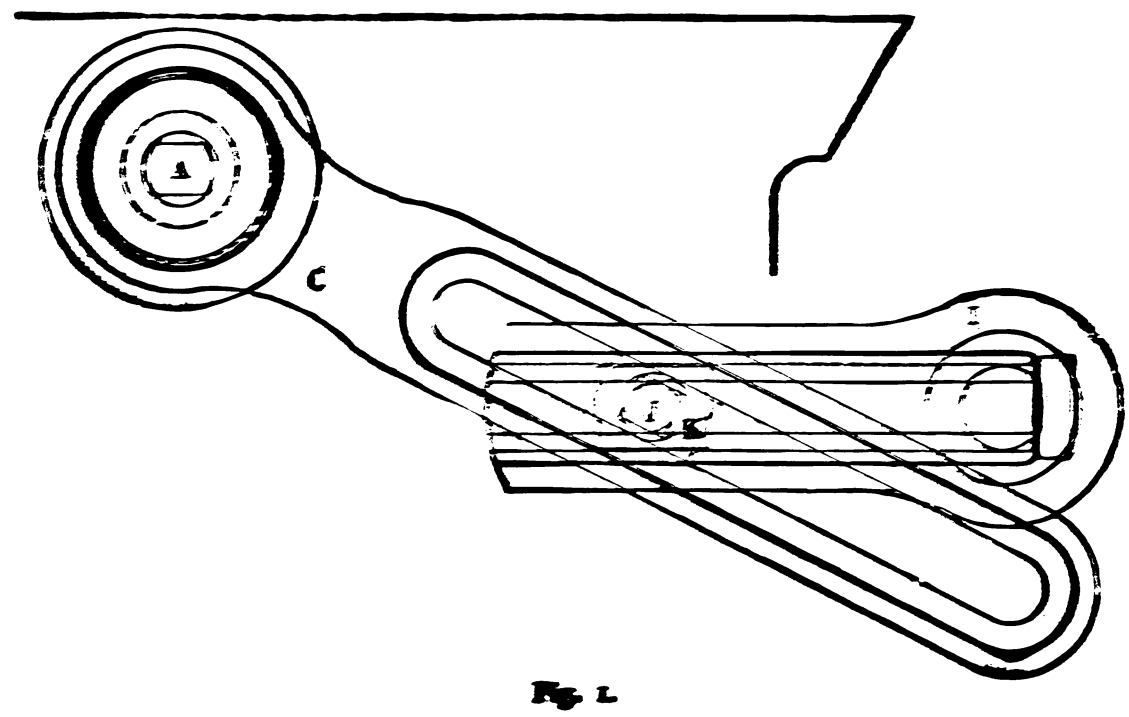

Fig. 1.

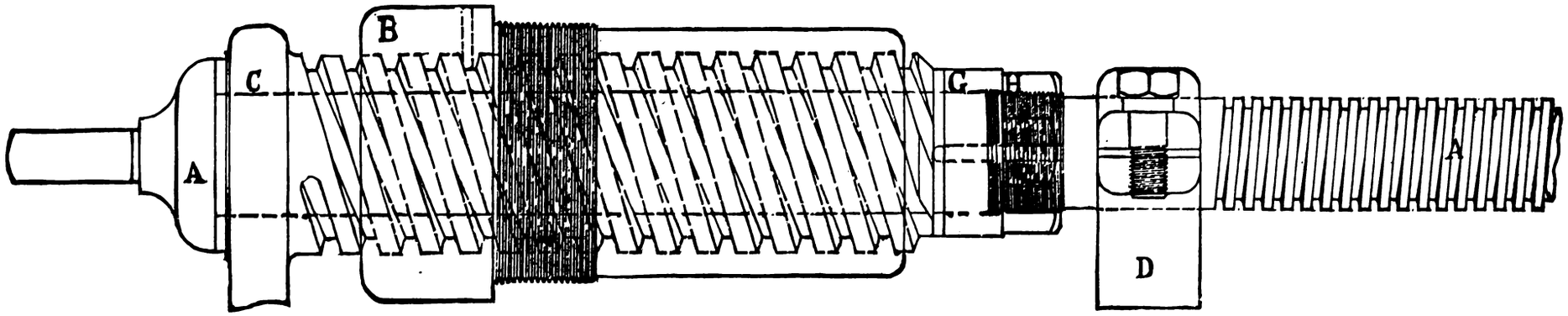

Fig. 2.

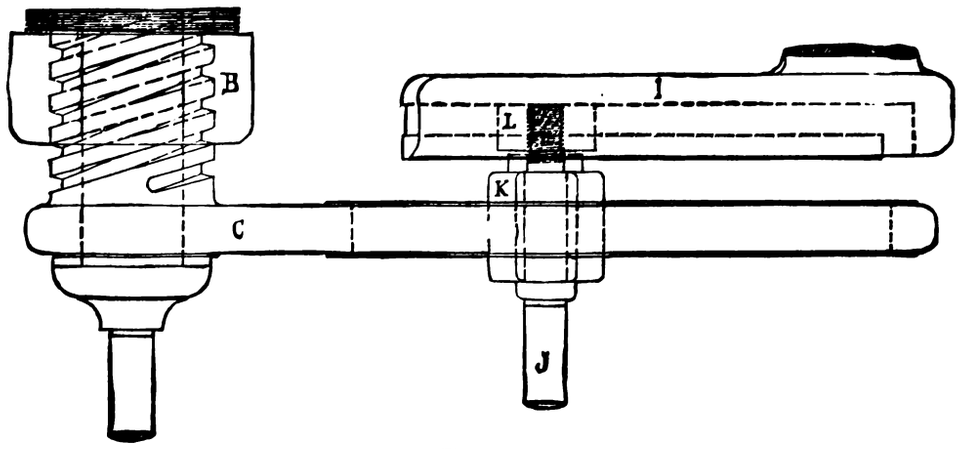

Fig. 3.

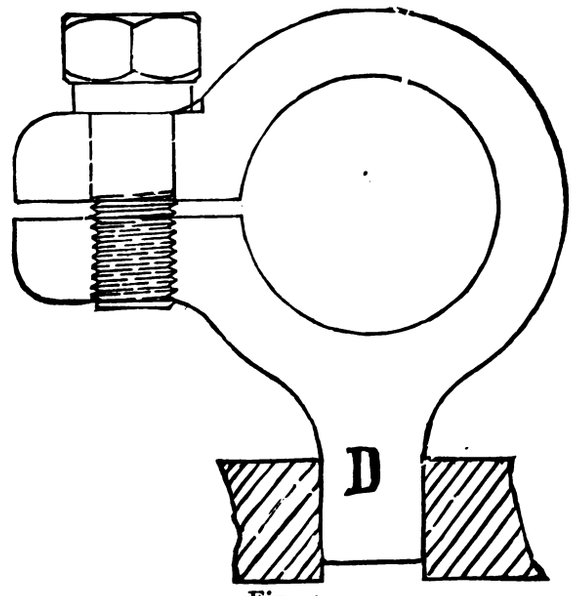

Fig. 4.

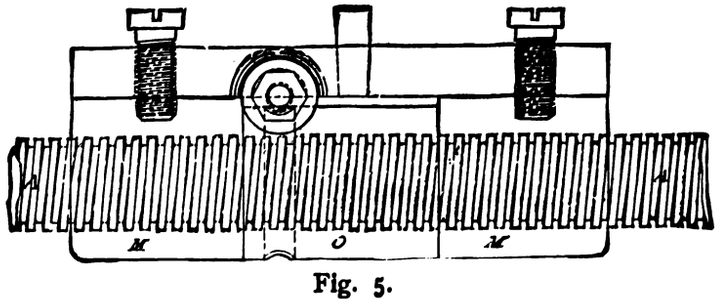

Fig. 5.

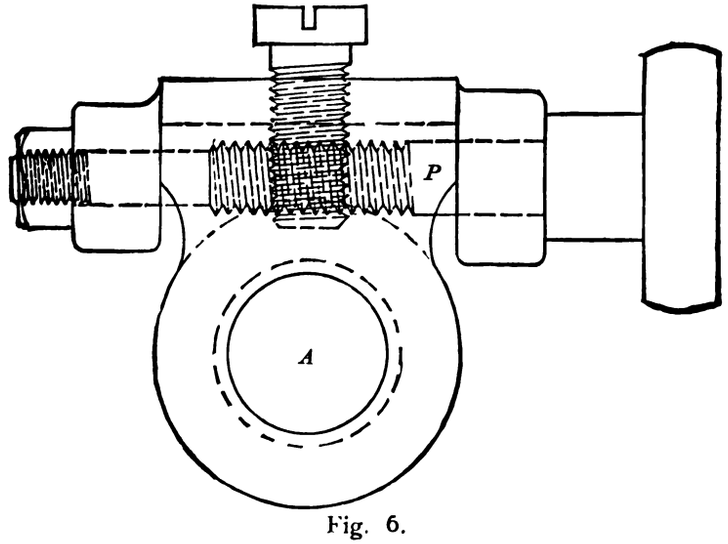

Fig. 6.

Referring to the details, it will be seen that the rocker arm I (Figs. 1 and 3), on the front end of the side rod, has a T-slot, which allows the stud J and nut L to be set at any desired point from A to its fullest throw. On this stud is a block K, which slides in an elongated slot in the piece C; motion is thus transmitted from I to C, the amount of it being determined either by the position of the stud in the arm, or that of the vertical rod in the cam rocker arm.

In Fig. 3 the cylindrical nut B is screwed tightly into the slotter frame; this nut can be renewed at any time should the threads inside become worn. The piece C, upon being partially rotated forward and backward, has a longitudinal movement in and out of the nut B. The shoulders A and G are very quickly and easily adjusted through the nut H and sliding collar G (the latter moving on a spline in the feed screw A). The feed screw A is thus given the same longitudinal motion as the piece C, but at the same time it is prevented from rotation by the friction clamp D (Figs. 2 and 4), which slides in a slot cut into the main frame, parallel with the screw A. When the feed proper is applied (feed is independent of the relief), the friction clamp D is overpowered, and the feed screw revolved the desired amount.

The slotting table has, besides the usual bearing surfaces, a continuous support on its under side extending out to nearly the full diameter of the table, thereby giving it rigidity when the tool is cutting away from the centre or near the edge of table.

The slotting table is connected to the feed screw by a solid nut, or by one far better, as shown in Fig. 5, which has the cylindrical piece O well fitted between the inside faces of M, M, and held in position by the screw A, and the worm and worm gear shown. The nut serves exactly as a solid one, with the great advantage of being adjusted to compensate for longitudinal wear, and it will operate the table without lost motion; the "back lash" being taken up by rotating the cylindrical piece O on the screw A by the worm P (Fig. 6).

By this arrangement a perfect relief for the cutting tool is obtained, with the vital benefit of having a solid tool and solid ram.

An analysis of the motion, as imparted to the work table, is substantially this: More or less clearance is always given the cutting tool at the commencement and ending of its stroke; this clearance allows the feed time to act; also the relief.

As an illustration, we will suppose the tool to be just commencing its downward stroke; after it has done its work the relief instantly causes the table to recede the desired amount (which may be varied), thus permitting the tool to make its up stroke without rubbing or scraping against the job, as before stated.

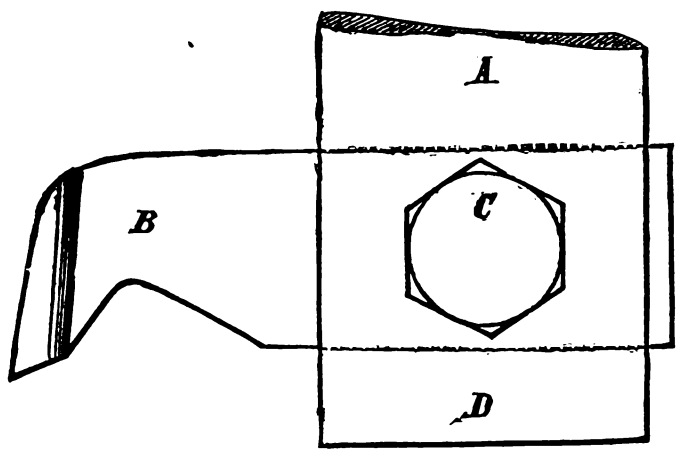

Fig. 1803.

When the tool is ready for a second cut, the relief has advanced the table to exactly its original position, and at the same time the feed screw has (independently) given the table the desired amount of feed.

The adjustable nut can be used in many places to a good purpose. Its application to the cross saddle of a planer beam is very desirable.

A friction pulley and improved friction brake (or stop motion) is used on countershaft to facilitate in stopping, or setting the tool at desired points of the stroke.

The other features of this slotter are the quick return motion, and the compensating lever at the top, which is so arranged as to take up all the dead weight of the ram, and transform the slotter in general from a plunging, one-sided, noisy one into a quiet, light-running, easy working machine, capable of motion as to feed in every direction, and with great possibilities in the way of heavy cuts.

The cutting tools for slotting machines are carried in one of three ways: first, bolted direct to the slotting bar or ram, in which case they stand vertically; secondly, in a box that is bolted to the end of the ram and standing horizontally; and thirdly, held in a tool bar, in which case the tool may stand either horizontally or vertically.

Fig. 1803 shows a tool B secured in a hole provided in a stout bar A by the set-screw C. The tool in this case being rigidly held, the cutting edge is apt to rub against the work during the upward stroke and become rapidly dulled. To avoid this, various devices have been employed, but before describing them it will be well to point out that the shape of the tool has an important bearing upon this point.

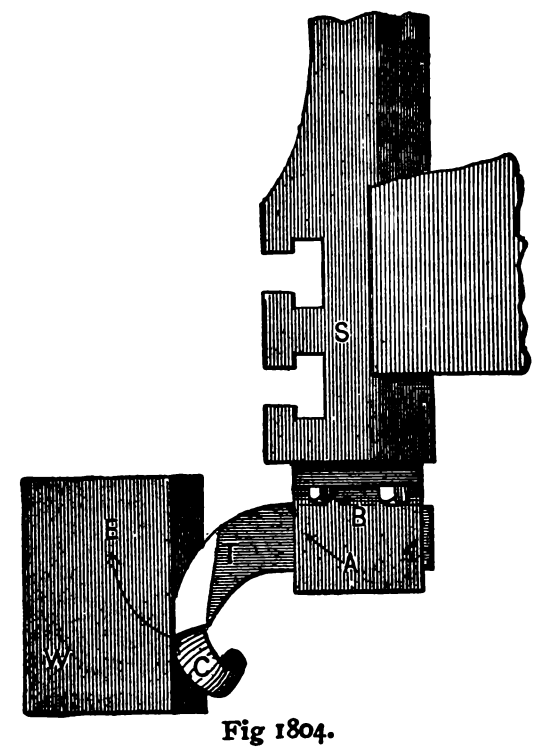

Fig 1804.

In Fig. 1804, for example, is a tool T bolted to the box B at the end of the slide S. W is a piece of work having the cut C taken off it. Now suppose that A is the centre of motion or fulcrum from which the spring of the tool takes place (and there is sure to be a little spring under a heavy cut), then the point of the tool will spring in the direction of the arrow E, and will cut deeper to the amount of its spring; but during the up stroke, the tool being released from pressure will not spring, and therefore will partly or quite clear the cut according to the amount of the spring. This desirable action may be increased by giving the face of the tool which meets the cutting a slight degree of side rake, as shown in Fig. 1805, in which S is the slide, T the tool, B the box, and F the direction of the tool spring, which takes place in this case from the pressure of the cutting in its resistance to being bent out of the straight line.

In Fig. 1806 is a device for obviating to some extent this defect. A A is the tool box or bar containing a tool-holding piece pivoted at C, the tool being secured therein by the set-screw E B. A spiral spring sustains the weight of the pivoted piece and of the tool. During the down stroke the spiral spring holds the pivoted piece against the box or bar A, while during the up stroke the pivoted piece allows the tool to swing from the pivot C as denoted by the arrow D. In this case the friction on the tool edge is that due to overcoming the resistance of the spring only.

In round-nose tools that are slight, and which from having a maximum length of cutting edge are very subject to spring, additional strength may be given the tool by swelling it out at the back, as denoted by the dotted line B in Fig. 1807.

Excessively heavy cuts may be taken by the form of tool shown in Fig. 1808, in which A is the tool, B the tool box, and C the

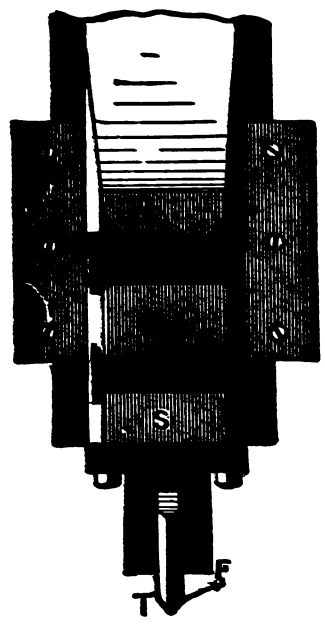

Fig. 1805.

work, the depth of cut being from D to E, which may be made 2½ inches if necessary. The face F of the tool is ground at an angle

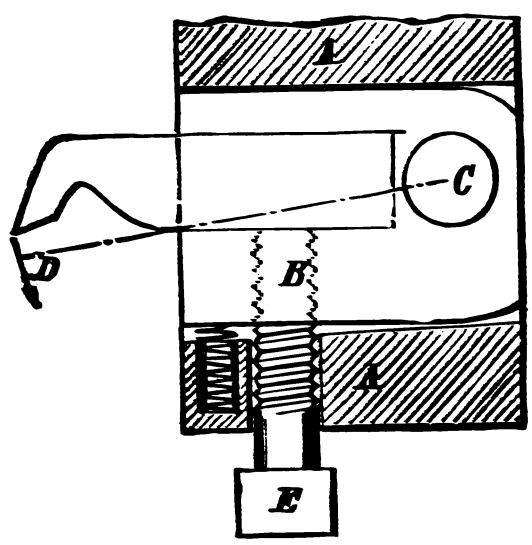

Fig. 1806.

in the direction of I, so that the tool shall take its cut gradually, and that the whole length of the tool cutting edge shall not strike the cut at the same instant, which would cause a sudden strain liable to break either the tool or some part of the machine itself. So, likewise, the tool will leave its cut gradually and not with a

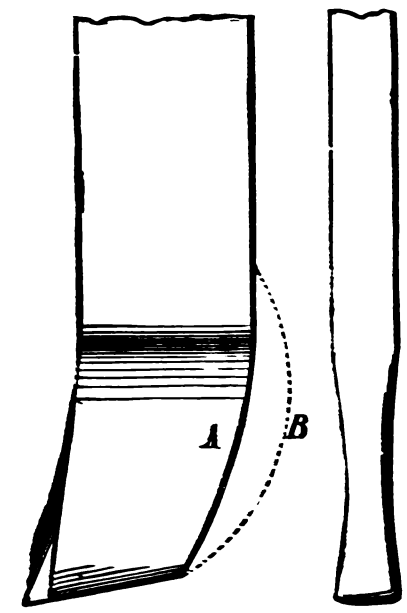

Fig. 1807.

jump. As shown in the cut, but a small part of the cutting edge would first meet the work, exerting for an instant of time only enough pressure and resistance to bring all the working parts of the machine up to a bearing, and as the tool descends (as

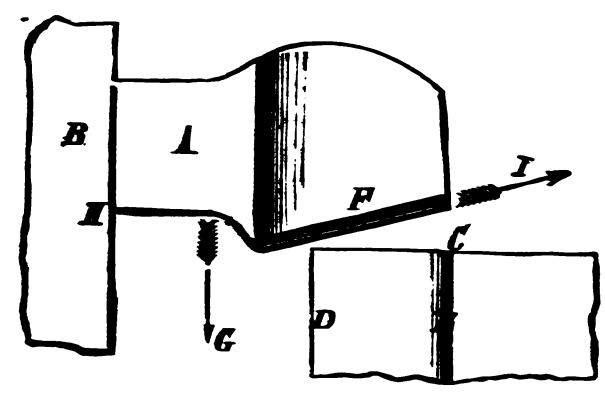

Fig. 1808.

denoted by the arrow G), the strain would increase until the whole length of tool cutting edge was in operation. For such heavy duty as this the tool is tempered down to a purple to give it strength.

CHAPTER XXI—THREAD CUTTING.—BROACHING PRESS.

IN Fig. 1809 is represented a front view of a patent die stock for threading pipe up to six inches in diameter. In the figure the three bits or chasers are shown locked in position by the face plate, which is shown removed in Fig. 1810. Fig. 1811 shows the machine with the face plate removed, the bit or chasers having pins in them which fit into the slots in the face plate, so that by rotating the plate the chasers may be set to size.

The head carrying the chasers is revolved by means of the gear-wheel and pinion, and Fig. 1812 represents a ratchet lever for revolving the pinion, and is useful when the pipe is in the

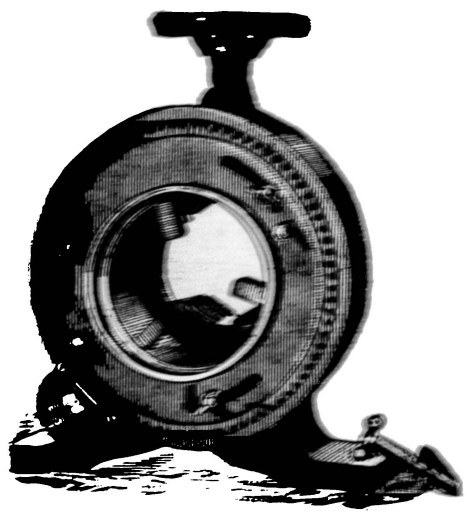

Fig. 1809.

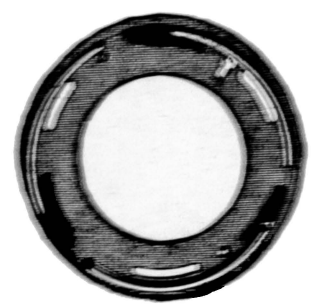

Fig. 1810.

ground and the die stock is used to cut it off and thread it without lifting it from its position.

The method of gripping the pipe is shown in Fig. 1813, in which the machine is represented as arranged for operating by belt power, the pinion being operated by a worm and worm-gear.

Referring to the pipe-gripping vice it is seen in the figure that the back of the machine is provided with ways in which the gripping jaws slide. The lower jaw is adjusted for height to suit

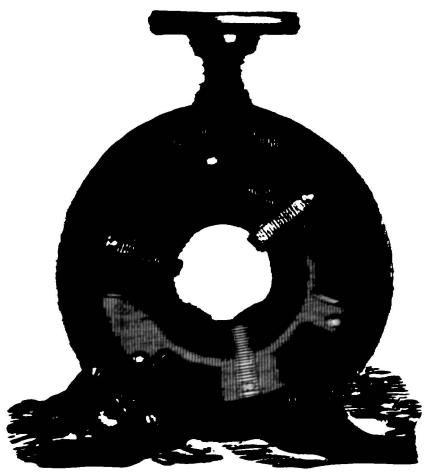

Fig. 1811.

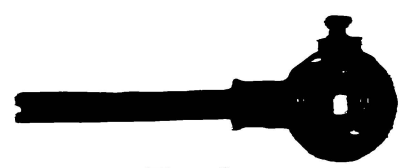

Fig. 1812.

the size of pipe to be operated upon, and is firmly locked in its adjusted position. It is provided with an index pointer, and the face of the slideway is marked by lines to suit the different diameters of pipe, so that this jaw may at once be set to the proper height to bring the pipe central to the bits. The lower jaw being set, all that is necessary is, by means of the hand wheel, to operate the upper one to firmly grip the pipe. Fig. 1814 shows the front of the machine when arranged for belt power.

The No. 1 die stock threads pipe from one to two inches in diameter, but has no cut-off. The large gear has cut teeth, and the pinion is of steel, working in gun-metal bearings. The gripping jaws are fitted with cast-steel faces, hardened.

By a simple change the stock may be used to cut left-hand as well as right-hand threads, this change consisting in putting in left-hand bits and in replacing the right-hand screw ring with a left-hand one. After a piece of pipe has been threaded, all that is necessary is to turn the head in the opposite direction, and the

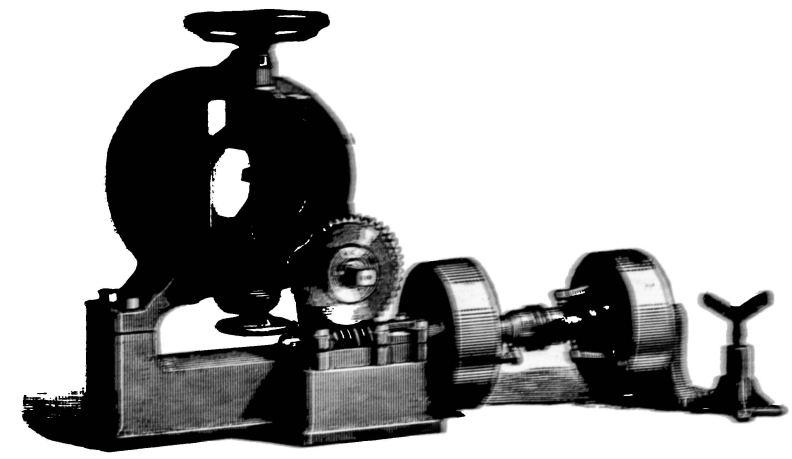

Fig. 1813.

bits retire from the pipe thread, so that the pipe may at once be withdrawn, which preserves the cutting edges of the bits as well as saves the time usually lost in winding the dies back.

In threading machines the bolt or pipe, as the case may be, may be revolved and the die held stationary, or the die may be revolved and the pipe held from revolving, the differences between the two systems being as follows, which is from *The American Machinist*:—

Fig. 1815 may be taken to represent a machine in which the pipe is held and the die revolved, and Fig. 1816 one in which the pipe is revolved and the dies are held in a head, which allows them to move laterally to suit the pipe that may not run true, while it prevents them from revolving.

In the former figure the bolt or pipe is shown to be out of line with the die driving spindle, and the result will be that the thread will not be parallel with the axis of the pipe. Whereas in

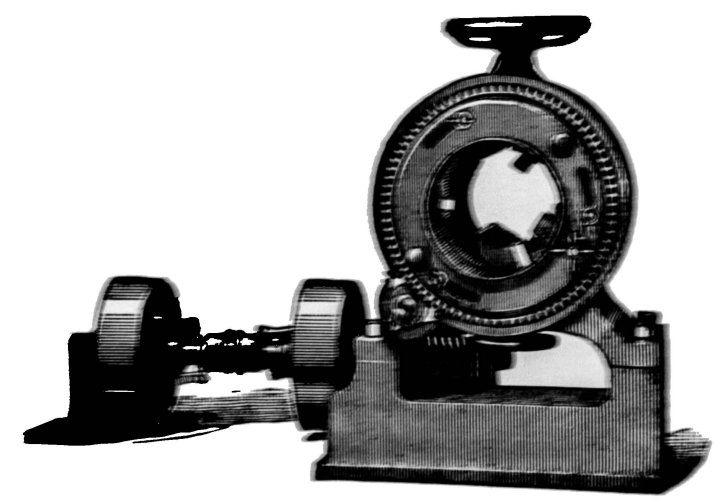

Fig. 1814.

Fig. 1816 the thread will be true with the axis of the work, because the latter revolves, and as the die is permitted more lateral motion it can move to accommodate itself to the eccentric motion of the work, if the latter should not run true.

If the end of a piece of pipe is not cut off square or at a right angle to the pipe axis, and the die has liberty to move, it will thread or take hold of one part, the longest one, of the pipe circumference first, and the die will cant over out of square with

the pipe axis, and the thread cut will not be in line with the pipe axis.

The two important points in operating threading machines is

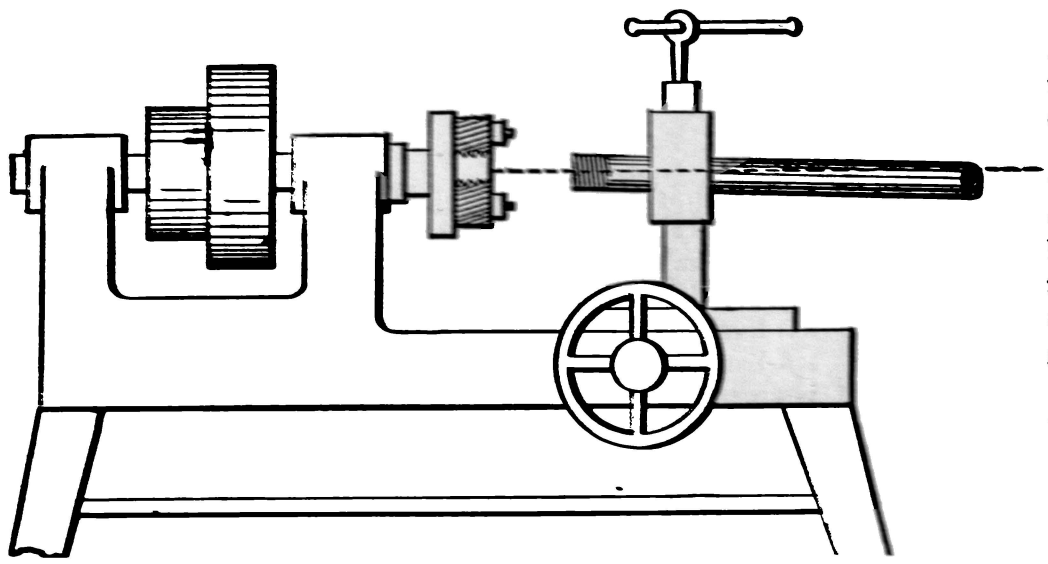

Fig. 1815.

to keep the dies sharp and to well lubricate them with oil. When dies are run at a maximum speed and continuously at work they should be sharpened once or, if the duty is heavy, twice a day, a very little grinding sufficing.

In nut tapping the oil lubrication is of the utmost importance, and is more difficult because the cuttings are apt to clog the tap flutes and prevent the oil from flowing into the cutting teeth.

When the tap stands vertical and the nuts are put on at the upper end (the point of the tap being uppermost), the cuttings are apt to pass upwards and prevent perfect lubrication by the descending oil. When the taps stand horizontally, gravity does not assist the oil to pass into the nut, and it falls rapidly from the tap, hence it is preferable that the tap should stand vertical with its point downwards, and running in oil and water.

In machines which cut the bolt threads with a solid die, it is obvious that after the thread is cut upon the bolt to the required distance, the direction of rotation of the bolt or die, as the case may be, requires to be reversed in order to remove the bolt from the die, and during this reversal of rotation the thread upon the bolt is apt to rub against and impair the cutting edges of the chasers or die teeth.

To obviate this difficulty in power machines the dies are sometimes caused to open when the bolt is threaded to the required distance, which enables the instant removal of the finished work, and this saves time as well as preserving the cutting edges of the die or chaser teeth.

In machines in which the bolt rotates, the machine must be stopped to take out each finished bolt and insert the blank one, which is unnecessary when the bolt is stationary, because so soon as the bolt is threaded to the required distance the dies may open automatically, the carriage holding the bolt at once withdrawn and a new one inserted.

When the dies open automatically the further advantage is secured that the bolts will all be threaded to an equal distance or length without care on the part of the operator.

A hand machine for threading bolts from $\frac{1}{4}$ inch to $\frac{3}{4}$ inch in diameter is shown in Fig. 1817. It consists of a head carrying a live spindle revolved by hand, by the lever shown at the right-hand end of the machine, being secured to the live spindle by a set-screw, so that the handle may be used at a greater or less leverage to suit the size of the thread to be cut; on the front end of this spindle are the dies, consisting of four chasers held in a collet that is readily removable from the spindle, being held by a spring bolt which, when pressed downwards, frees the collet from the spindle.

The work is held in a pair of vice jaws operated by the hand wheel shown, and this vice is moved endwise in its slideways on the bed by means of the vertical lever shown. The bolt being stationary, the small diameter of the die enables it to thread bent or crooked pieces, such as staples, &c.

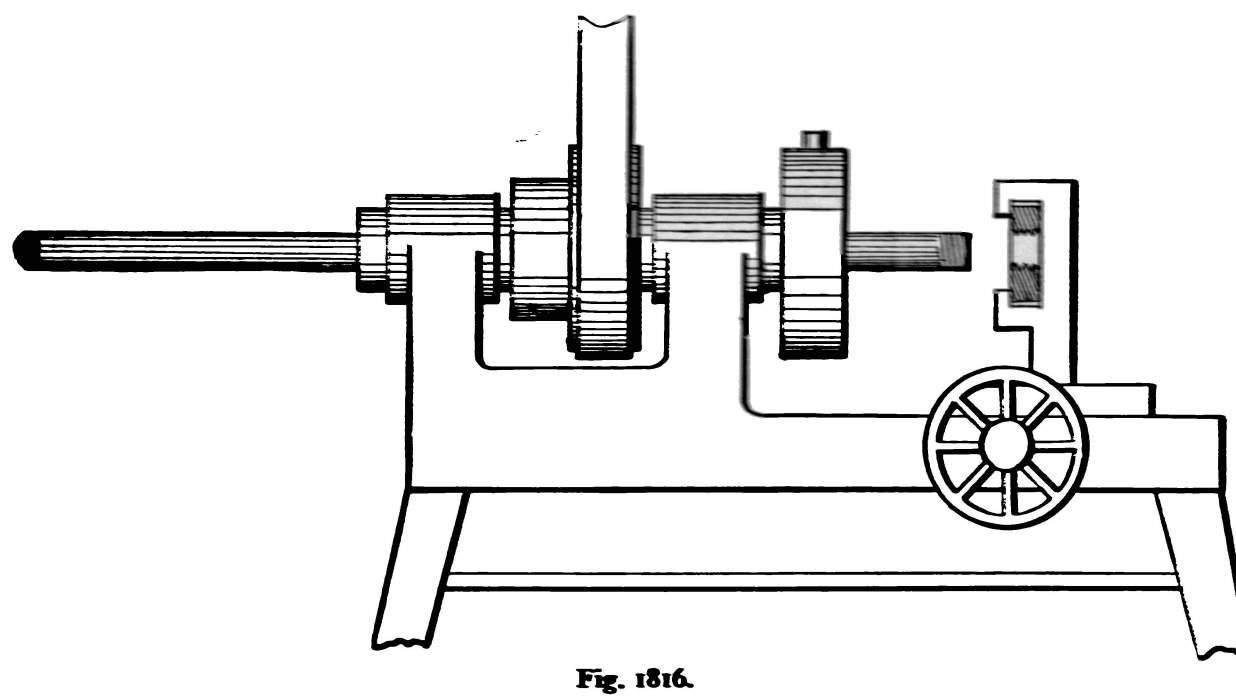

Fig. 1816.

For bolts of larger diameter requiring more force than can be

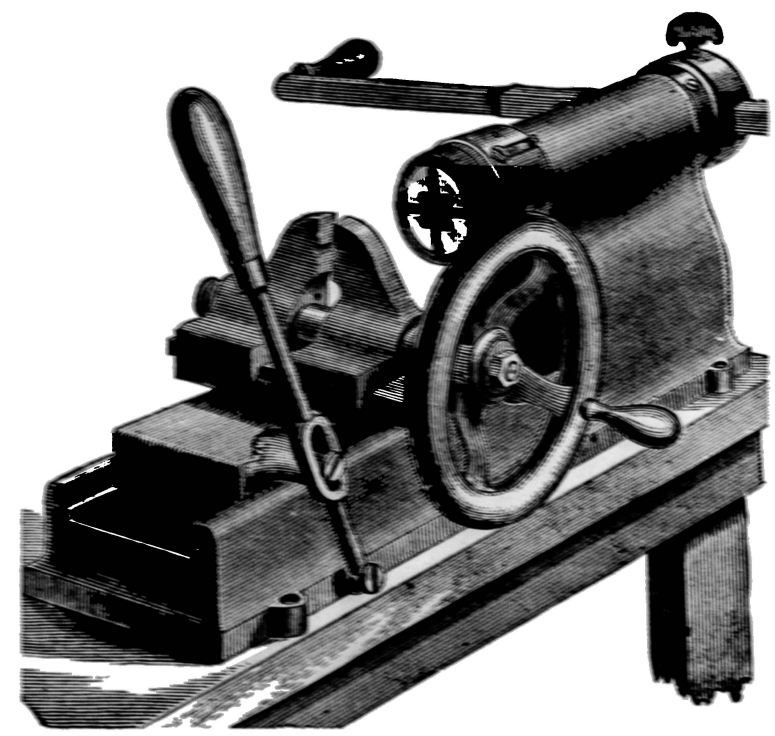

Fig. 1817.

exerted by a hand lever, a geared hand bolt cutter is employed.

In Fig. 1818 is represented a hand bolt cutter. In this cutter the bolt is rotated, being held in a suitable chuck. The revolving spindle is hollow in order to receive rods of any length, and is operated by bevel-wheels as shown, so as to increase the driving power of the spindle by decreasing its speed of rotation. To provide for a greater speed of rotation than that due to the diameters of the bevel-pinion and wheel, the lever is made to slide through the pinion, effecting the same object and convenience as described for the machine shown in Fig. 1817.

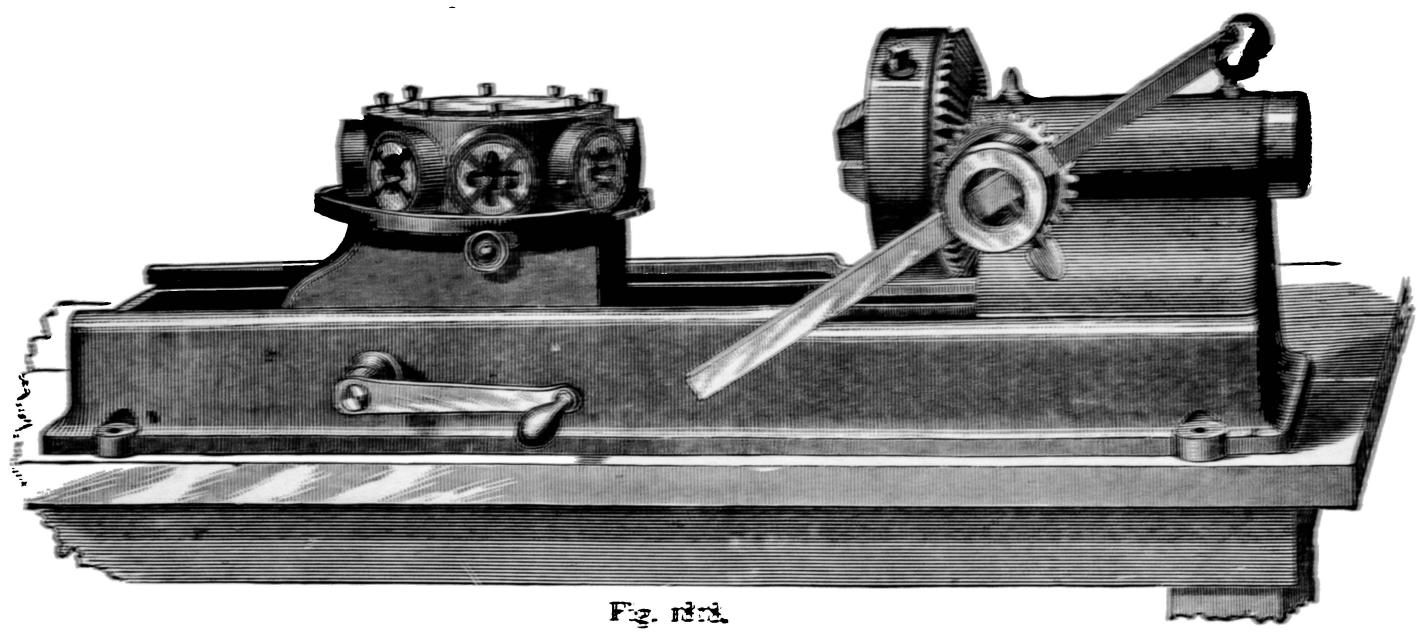

Fig. 1818.

The threading dies are held in collets carried by a head or cylinder mounted horizontally on a carriage capable of being moved along the bed by means of a rack and pinion, the latter being operated by a handle passing through the side of the bed as shown. The cylinder also carries a collet adapted for recessed plates so as to receive square or hexagon nuts of different sizes for tapping purposes, the taps being held in the rotating chuck. The collets are capable of ready and separate extraction, and by removing the collet that is opposite to the one that is at work, the end of a bolt may pass if necessary entirely through the head or cylinder threading the work to any required length or distance.

To insure that the die shall stand axially true with the revolving spindle, bolt holes are drilled in the lower part of the cylinder, and a pin passes through the carriage carrying the head, and projects into these holes, which are so situated that when the pin end projects into a hole and locks the head a collet is in line with the spindle.

The dies consist of four chasers inserted in radial slots in collets held in place and bound together by a flat steel ring, which is let into the face of the collet and the external radial face of the chasers, and secured to the collet by screws. One chaser only is capable of radial motion for adjusting the diameter of thread the die will cut, and this chaser is adjusted and set by a screw in the periphery of the collet.

The other two chasers being held rigidly in a fixed position in the ring act as back rests and cut to the diameter or size to which they are made, or according to the adjustment of the first chaser. The shanks of the collets are secured in the cylindrical head by means of either a bolt and key or by a set-screw.

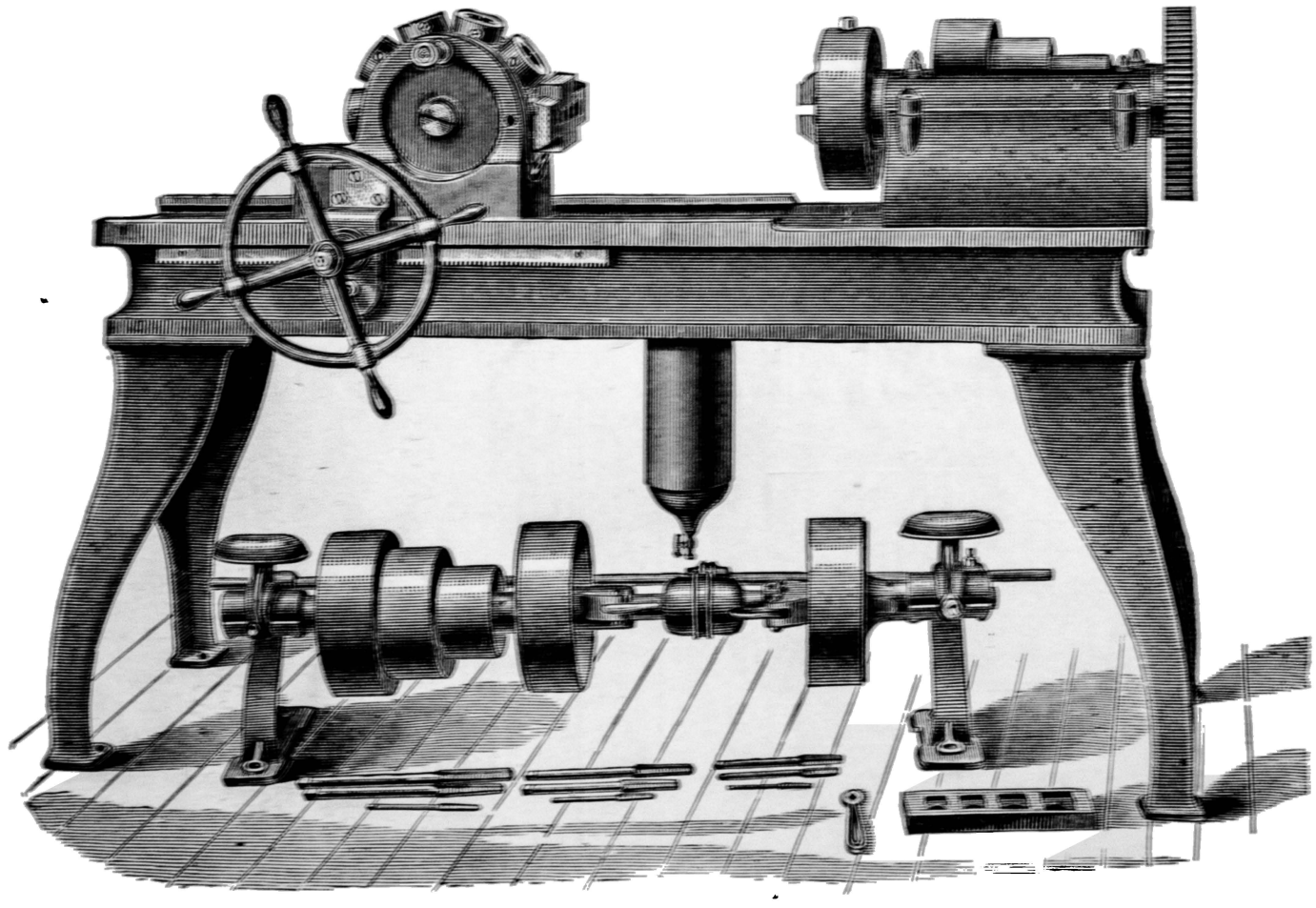

Fig. 1819.

The chasers are sharpened by grinding the face on an ordinary grindstone or emery wheel.

The chasers are numbered to their places and are so constructed that if a single chaser of a set of three should require renewal, a chaser can be obtained from the manufacturers that will match with the remaining two of the set, the threads on the one falling exactly in line with those on the other two, whereas in other dies the renewal of one chaser involves the renewal of the whole

number contained in the die. This is accomplished by so threading the dies that the thread starts from the same chaser (as No. 1) in each set.

In Fig. 1819 is represented one of these machines, which is intended for threads from $\frac{3}{8}$ to 1 inch in diameter. It is arranged to be driven by belt power, being provided with a pulley having three steps; on this pulley spindle is a pinion operating a gear-wheel on the die driving spindle, as shown.

The oil and cuttings fall into a trough provided in the bed of the machine, but the oil drains through a strainer into the cylindrical

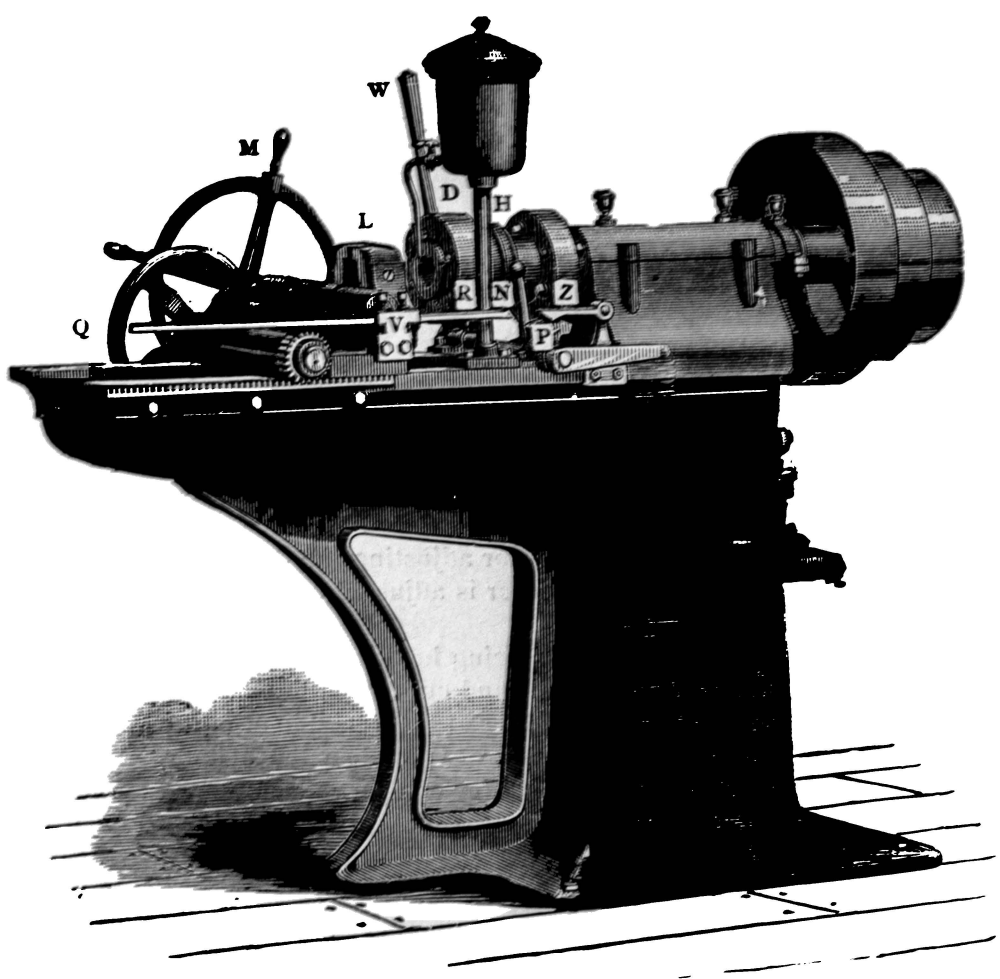

Fig, 1820.

receiver shown beneath the bed, whence it may be drawn off and used over again.

In Fig. 1820 is represented a bolt threading machine which is designed for bolts from $\frac{3}{16}$ to 1 inch in diameter.

The bolt to be threaded is gripped in the vice L, operated by hand by the hand wheel M, and is moved by hand up to the head

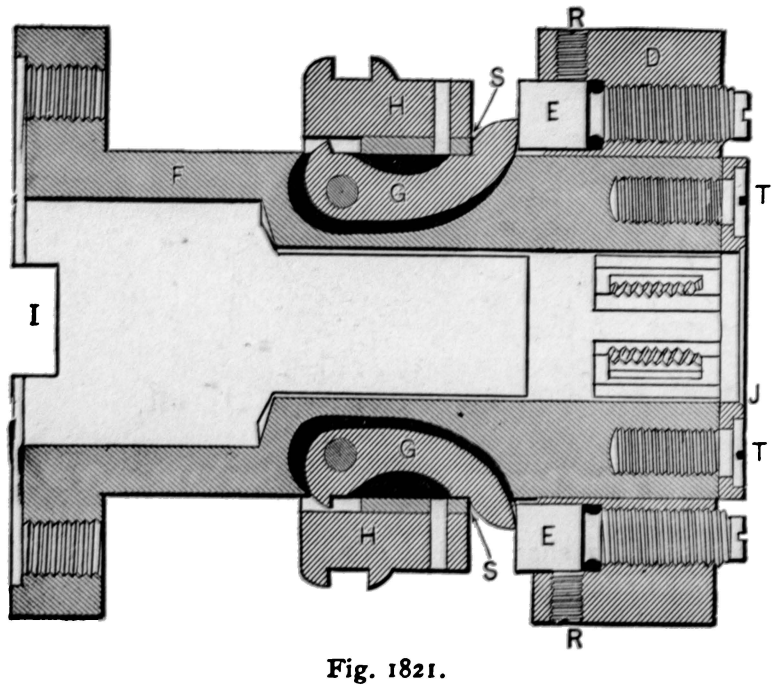

Fig. 1821.

D, by the hand wheel Q operating the pinion in the rack shown at the back of the machine. When the dies or chasers have cut or threaded the bolt to the required distance, the threading dies are opened automatically as follows:—

At H is a clutch ring for opening and closing the threading chasers, and at N is the lever operating the shoes in the groove of the clutch ring. This lever is upon a shaft running across the machine and having at its end the catch piece P; at Z is a catch for holding P upright against the pressure of a spring that is beneath the bed of the machine, and presses on an arm on the same shaft as the catch piece P. On the back jaw of the vice L is a bracket carrying a rod R, and the bolt or work is threaded until the end of rod R lifts catch Z, when the before-mentioned spring pulls lever N and clutch ring H forward, opening the dies and therefore stopping the threading operation. The length of thread cut upon the work is obviously determined by adjusting the distance rod R projects through V. The handle W is upon the same shaft as catch piece P and clutch lever N, and therefore affords means of opening the dies by hand.

The operation of the machine obviously consists of gripping the work in vice L, moving it up to the head D by the hand wheel Q, setting the rod R to open the dies when the bolt is threaded to the required length, and moving the vice back to receive a subsequent piece of work.

The construction of the head D and clutch and ring H is shown in Figs. 1821 and 1822.

The body F is bolted by the flange I to a face plate in the live spindle or shaft of the machine, and through slots in this body pass the holders or cases C containing the chasers or dies. Upon F is the piece D provided with a slot to receive the die cases and a tongue to move them. This slot and tongue, which are shown at E', are at an angle to the axis of F; hence if D be moved endways upon F the cases and dies are operated radially in or through the body F. To operate D laterally or endwise upon F the clutch ring H and the toggles G are provided, the latter being pivoted in the body F, and H being operated endwise upon F by the lever shown at N in the general view, Fig. 1820. The amount to which the dies will be closed is adjustable by means of the adjusting screws E, which are secured in their adjusted position by the set-screws R, Fig. 1821; it being obvious that when H meets the shoulder S of G and depresses that end of the toggle, head D is moved to the right and the dies are closed when the end of G meets E, and ceases to close when G

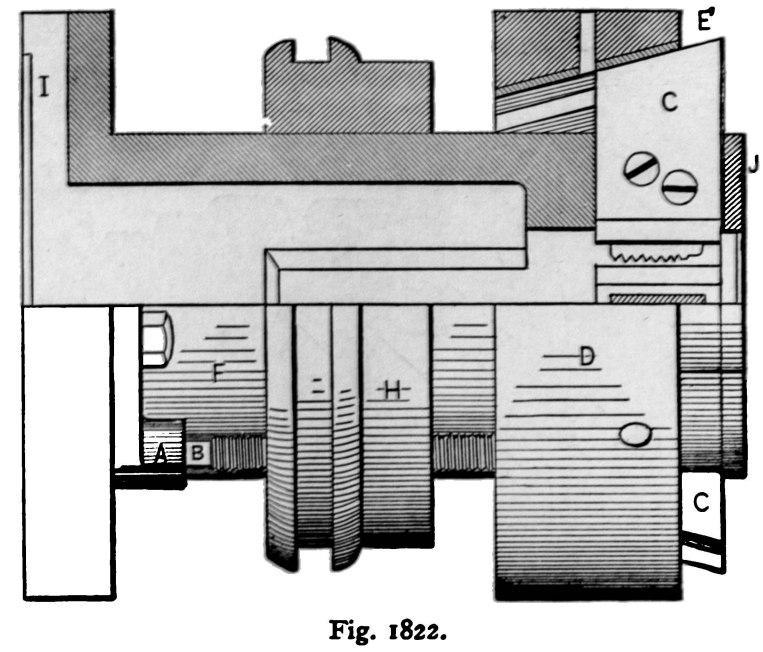

Fig. 1822.

has seated itself in F and can no longer move E. The backward motion of the clutch ring H, and therefore the amount to which the dies are opened, is regulated by the screw B and stop A in Fig. 1822, it being obvious that when B meets A the motion of H and D to the left upon F ceases and the dies are fully opened. The amount of their opening is therefore adjustable by means of screw B. J is simply a cap to hold the dies and cases in their places.

In the end view, Fig. 1823, E,E are the adjustment screws for the amount of die closure, and B,B those for the amount they will

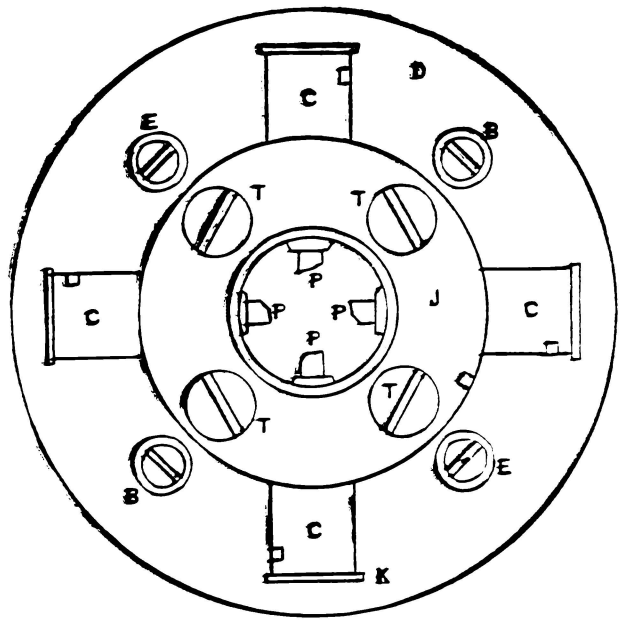

Fig. 1823.

open to, T representing the screws for the cap J, which is removed for the insertion and extraction of the dies and die cases.

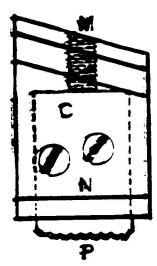

Fig. 1824.

The construction of the dies P and cases C is shown in Fig. 1824. Two screws at N secure the dies in their cases and a screw M adjusts them endways so as to set them forward when recutting them. By inserting the dies in cases they may be made of simple pieces of rectangular steel, saving cost in their renewal when worn too short.

Fig. 1825 shows the machine arranged with back gear for bolts from 2 to 2½ inches in diameter, the essential principles of construction being the same as in Fig. 1820.

oil to the dies. This pump is operated by an eccentric upon the end of the shaft of the cone pulley.

The construction of the head of this machine is shown in Fig. 1827A. Z is the live or driving spindle, upon which is fast the head A. In A are pivoted at M the levers L which carry the dies

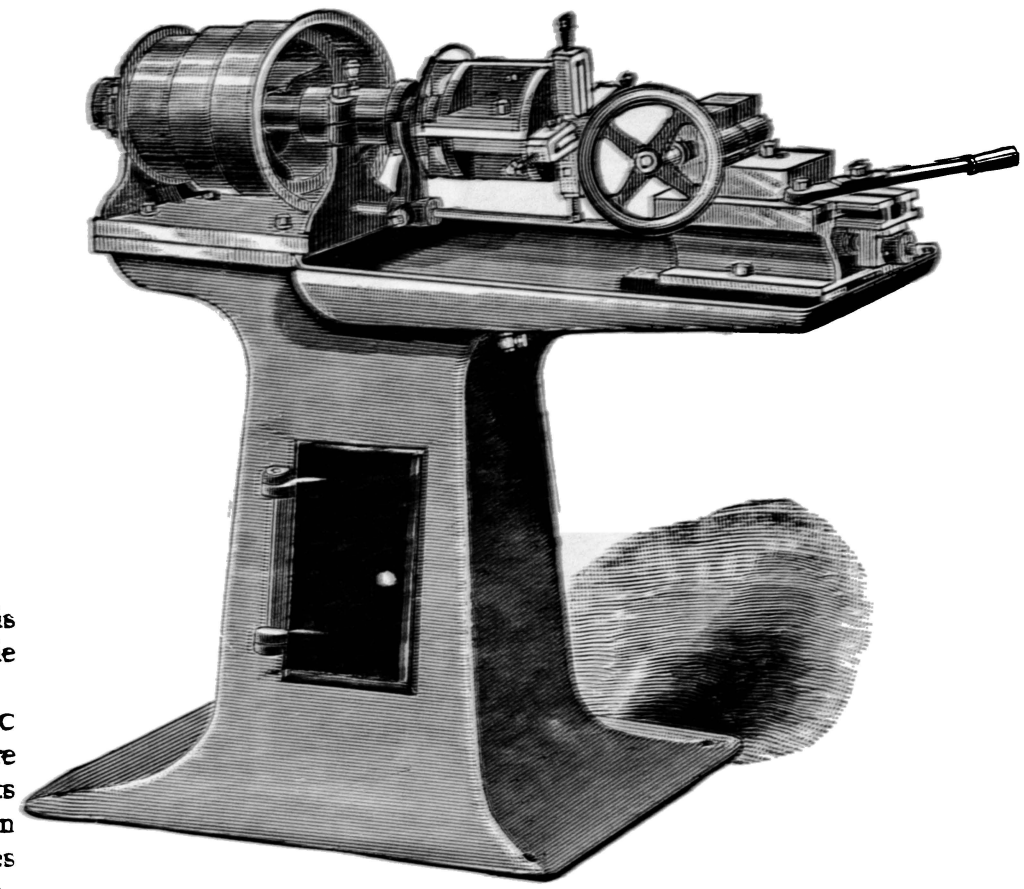

Fig. 1826.

D, which are secured in place in the levers by the set-screws B and adjusted to cut to the required diameter by the screws E. The levers L are closed upon the clutch C by means of the springs R and S, each of these springs acting upon two diametrically opposite levers, hence the action of the springs is to open the dies D. The clutch C has a cone at T and slides endways upon the live spindle Z. The clutch lever and shoes are upon a shaft

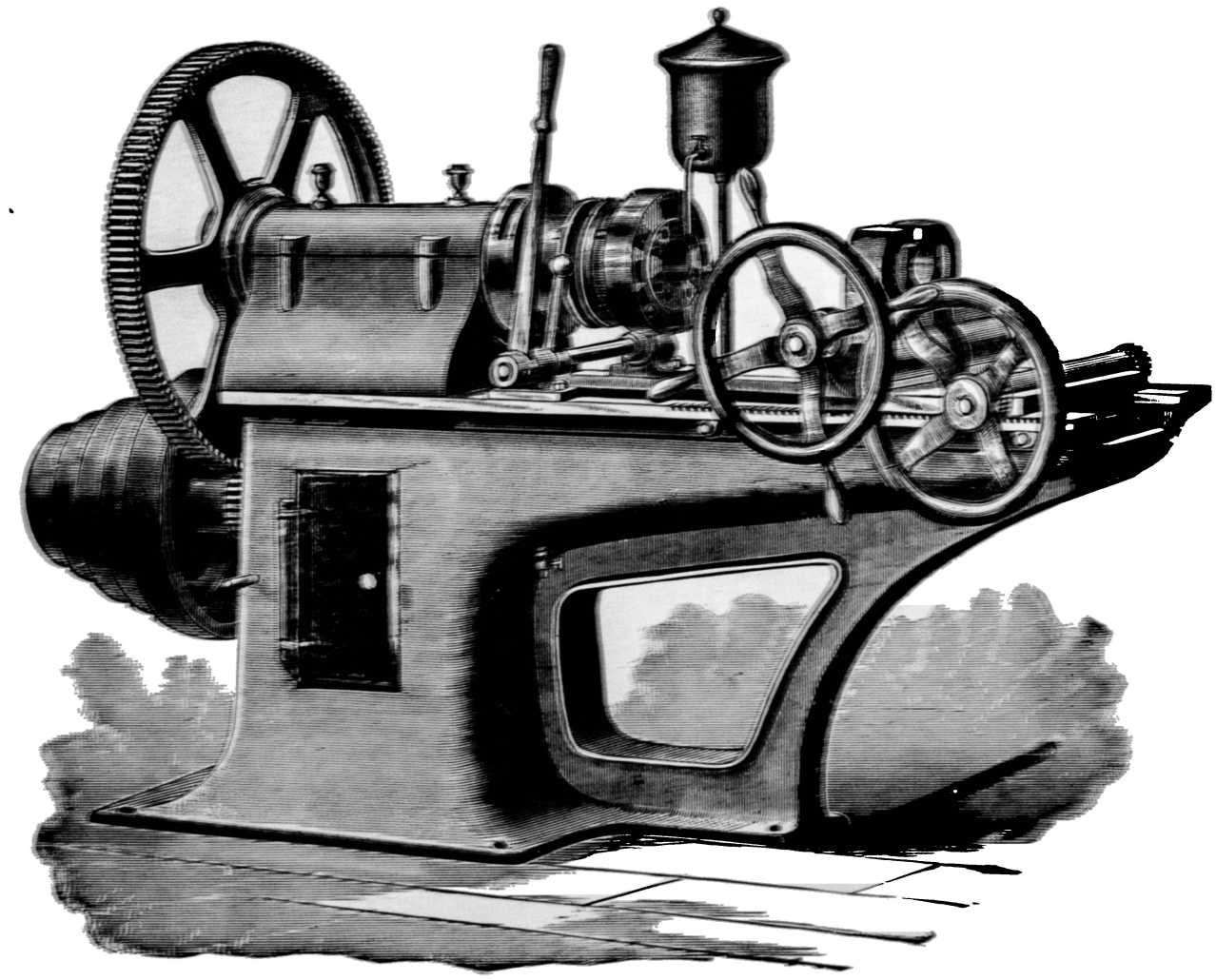

Fig. 1825.

In Fig. 1826 is represented a single and in Fig. 1827 a double "rapid" machine, constructed for sizes up to ⅝ inch in diameter, the double machine having a pump to supply

unni g across the machine and actuated by a rod corresponding to the rod R in Fig. 1820. When the clutch and levers L are in the position shown in the figures the dies are closed for threading the bolt, and when this threading has proceeded to the required distance along the work, clutch C is moved by the aforesaid rod and lever in the direction of arrow W, and the springs R,S close the ends P of lever L down upon the body X of the clutch opening the dies and causing the threading to cease.

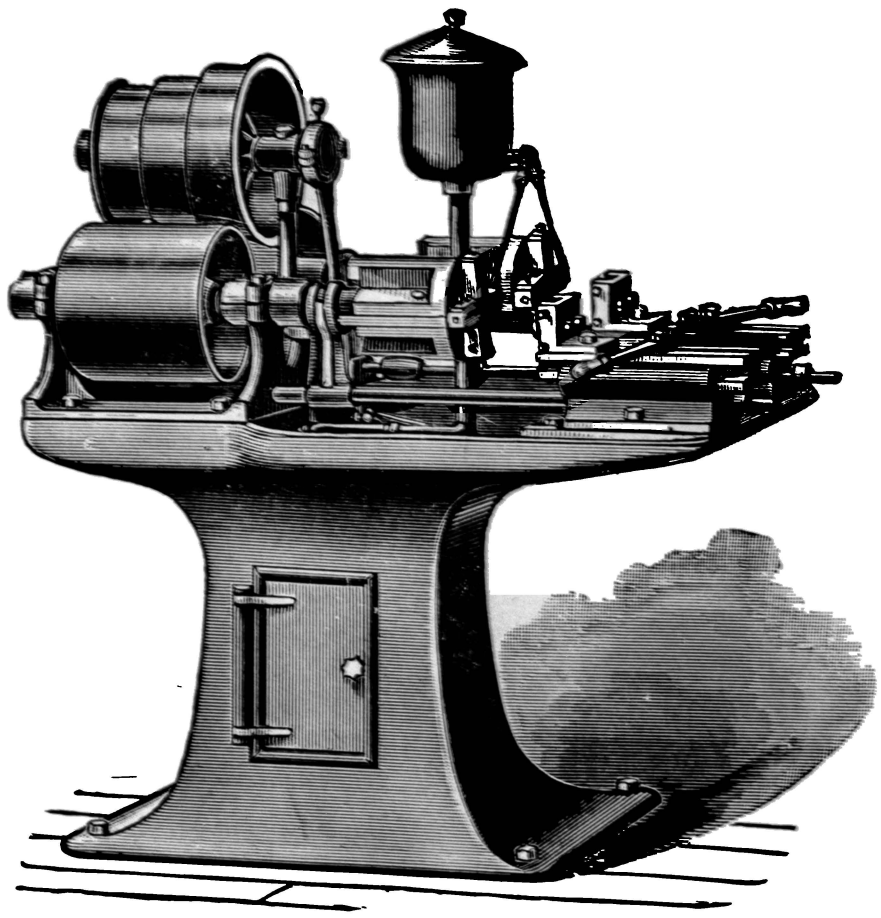

Fig. 1827.

Fig. 1828 represents a " double " rapid machine for threading work up to four inches in diameter, and therefore having back gear so as to provide sufficient power. The gauge rod from the carriage here disengages a bell crank from the end of the long lever shown, and thus prevents the spring to operate the cross shaft and open the dies.

In Fig. 1829 is represented a bolt threading machine or bolt cutter, which consists of a head carrying a live spindle upon which is a head carrying four bits or chasers that may be set to cut the work to the required diameter, and opened out after the work is threaded to the required length and the bolt withdrawn without losing the time that occurs when the dies require to run backward to release the work, and also preventing the abrasion and wear that occurs to the cutting edges of the die bits or chasers when revolved backward upon the work. This head is operated by the upright lever shown in the figure, this lever being connected to the clutch shown upon the live spindle. The details of construction of the clutch and of the head are shown in Figs. 1830, 1831, 1832, and 1833. The work to be threaded is gripped between jaws operated by the large hand wheel shown, while the vice moves the work up to or away from the head by means of the small hand wheel which operates pinions geared with racks on each side of the bed of the machine as clearly shown in the figure.

Fig. 1830 is a longitudinal section of the head, and Fig. 1831 an end view of the same. P are the threading dies or chasers held in slots in the body *a* by the annular ring face plate K. The ends of the dies are provided with T-shaped caps T fitting into corresponding grooves or slideways in the die ring B, and it is obvious that as the heads of their caps are at an angle therefore sliding the ring B along *a* and to the right of the position it occupies in the figure will cause the dies P to close concentrically towards the centre or axis of the head *a*. At C is a ring capable of sliding upon *a* and operated by the upright lever shown in the general view in Fig. 1829.

The connection between the die ring B and the clutch ring C is shown in Figs. 1832 and 1833, the former being also a longitudinal sectional view of the head, but taken in a different plane from that in Fig. 1830. The barrel or body *a a* of the head is provided with two diametrically opposite curved rocking levers which are pivoted in recesses in *a a*. The clutch ring C envelops body *a* and passes between the curved ends of these rocking levers. The upper of the two rocker levers shown in the engraving connects with a lever E, which connects to a stud or plunger P, threaded to receive the adjusting screw I, which is threaded into the die ring B. Obviously when C is moved to the right along *a* it operates the rocking lever and causes B to move to the right and to close the dies upon the work. The amount of die closure, and therefore the diameter to which the dies will thread the work, is adjustable by means of the adjusting screw I, which has a coarse thread in B and a finer one in P, hence screwing up I draws B to the left and farther over the plunger P, thus shortening the distance between the centre of the curved lever and limiting the motion of B to the right. On the other hand, unscrewing I moves B to the right, and it is obvious that in doing this the cap T in Fig. 1830 is forced down by the groove in B and the dies are moved endwise towards the axis *a a*, or in other words, closed.

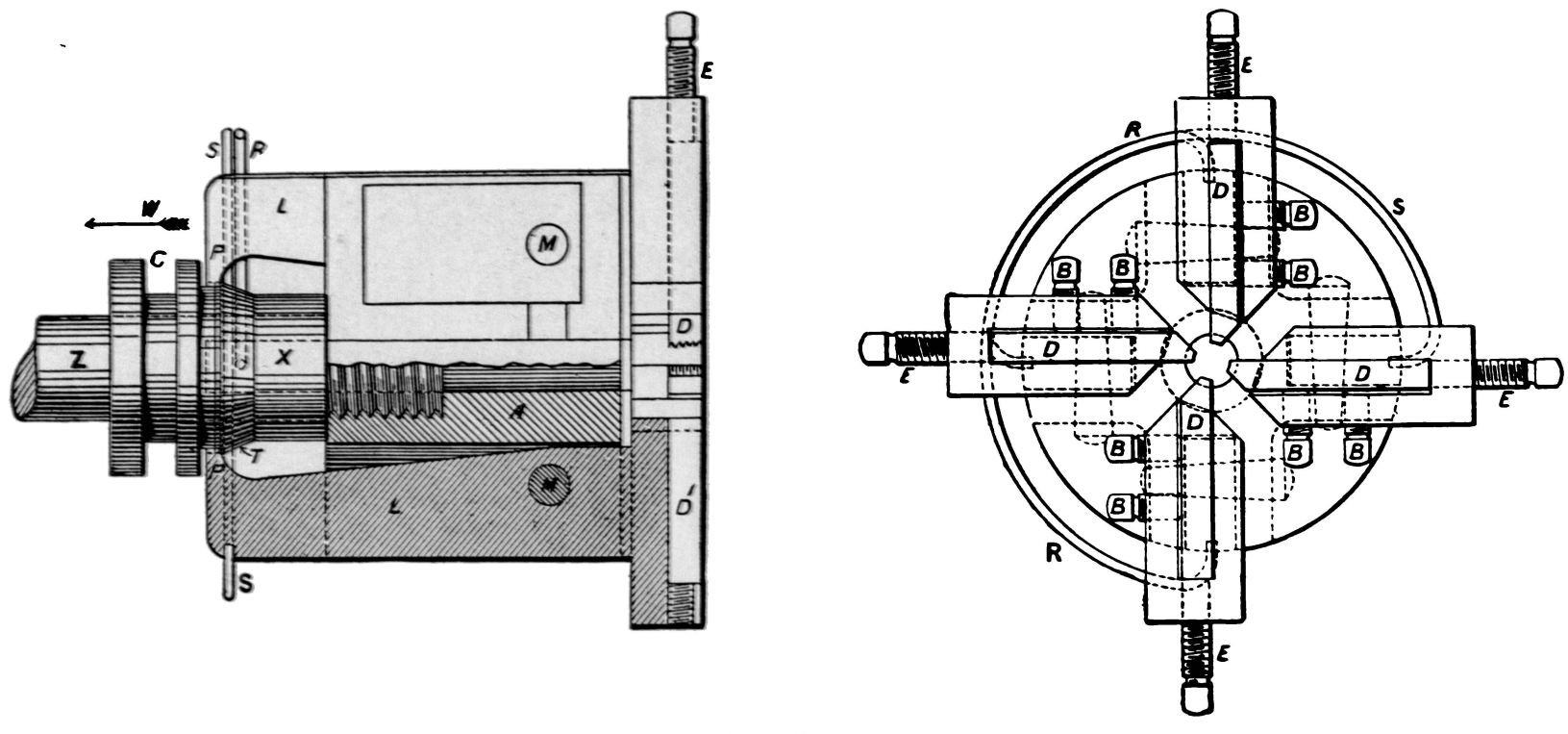

Fig. 1827A.

It will be clear that a greater amount of power will be necessary

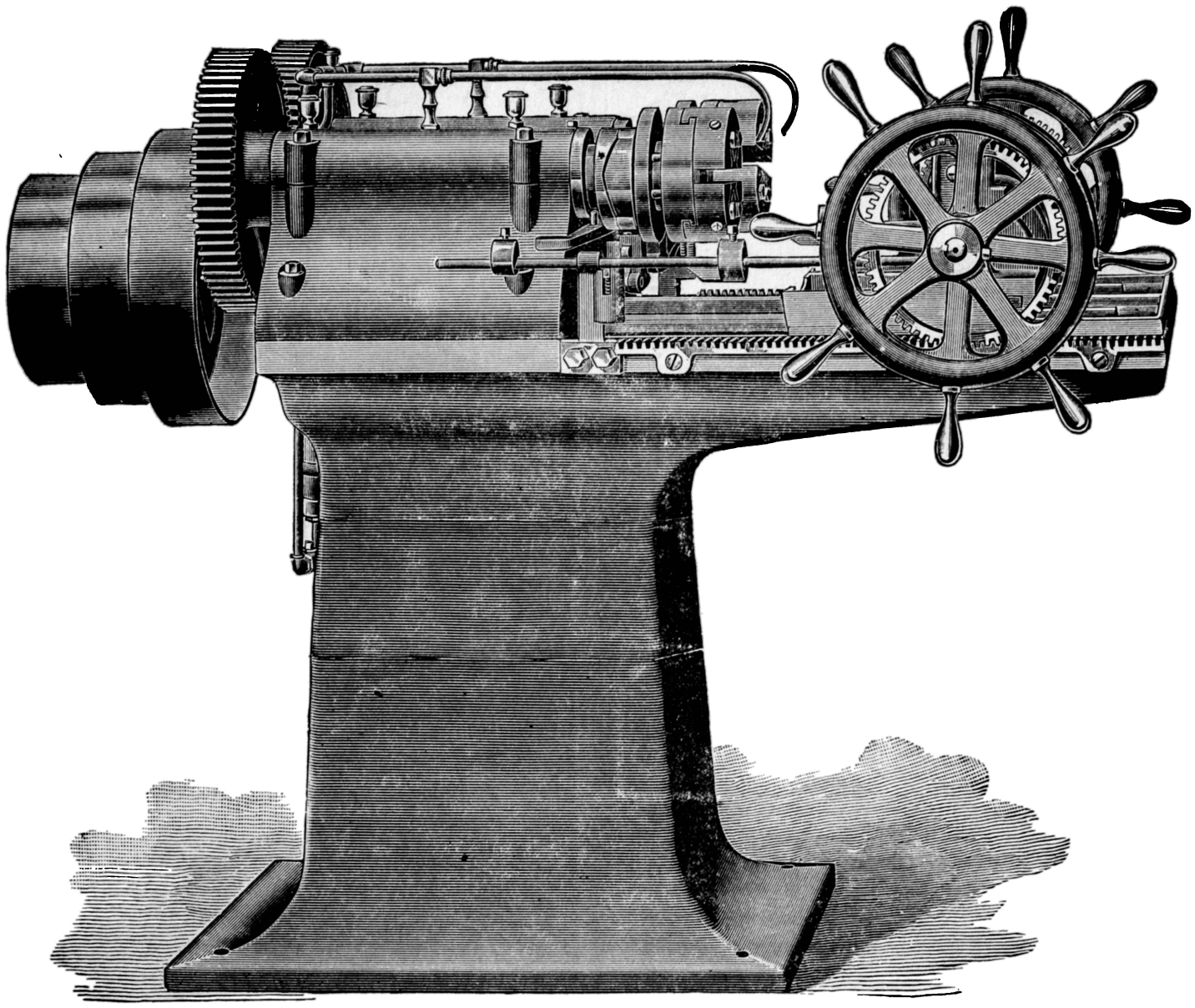

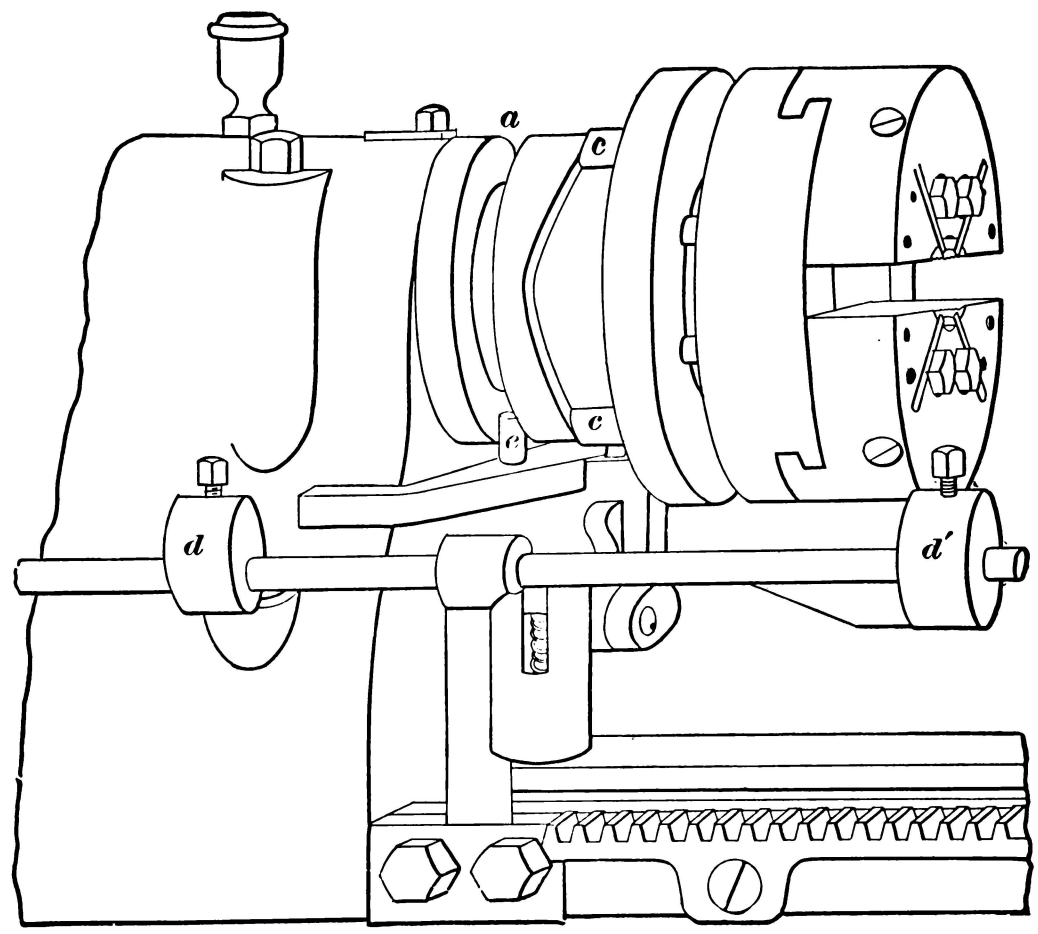
a
c
c
c
d
d'

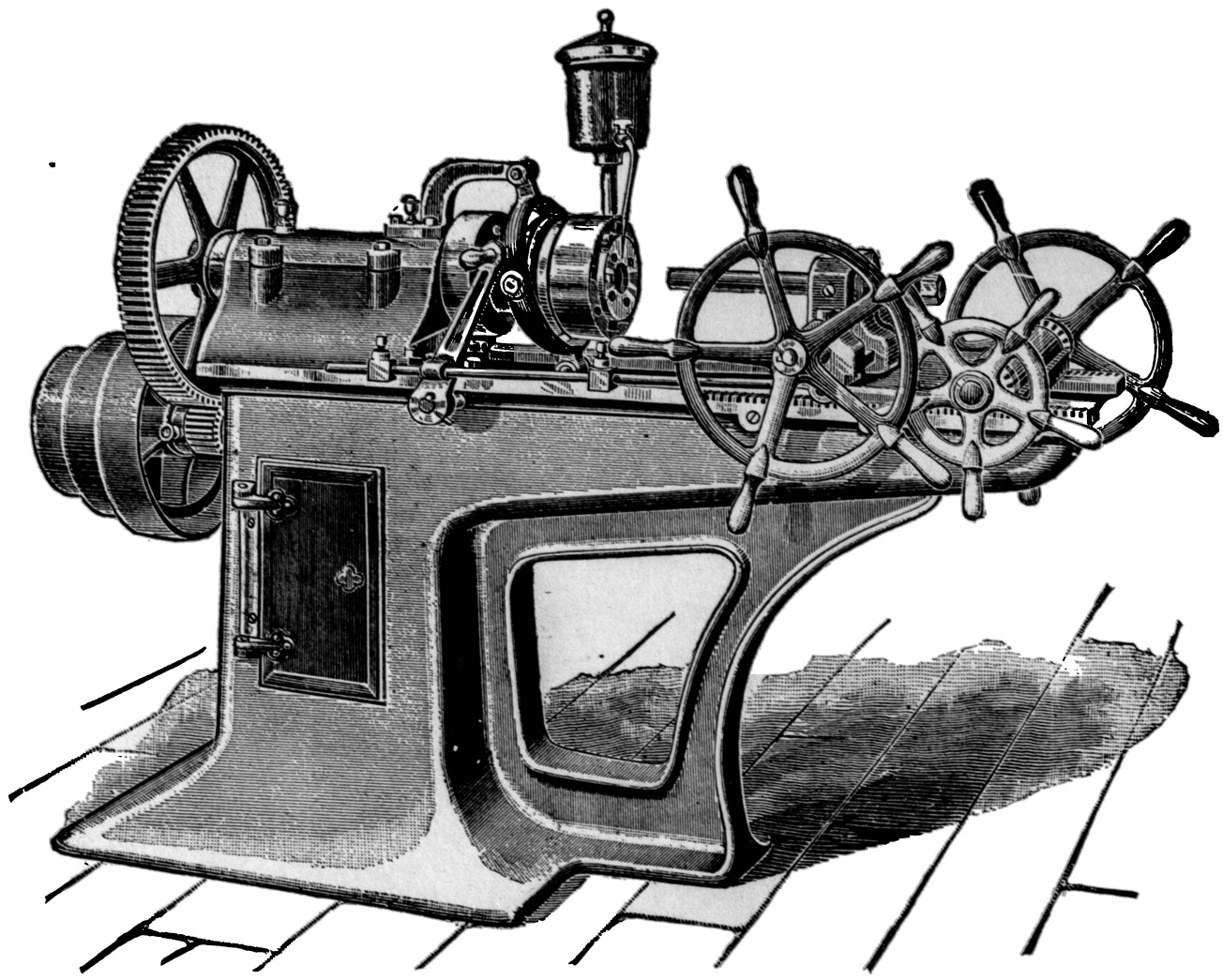

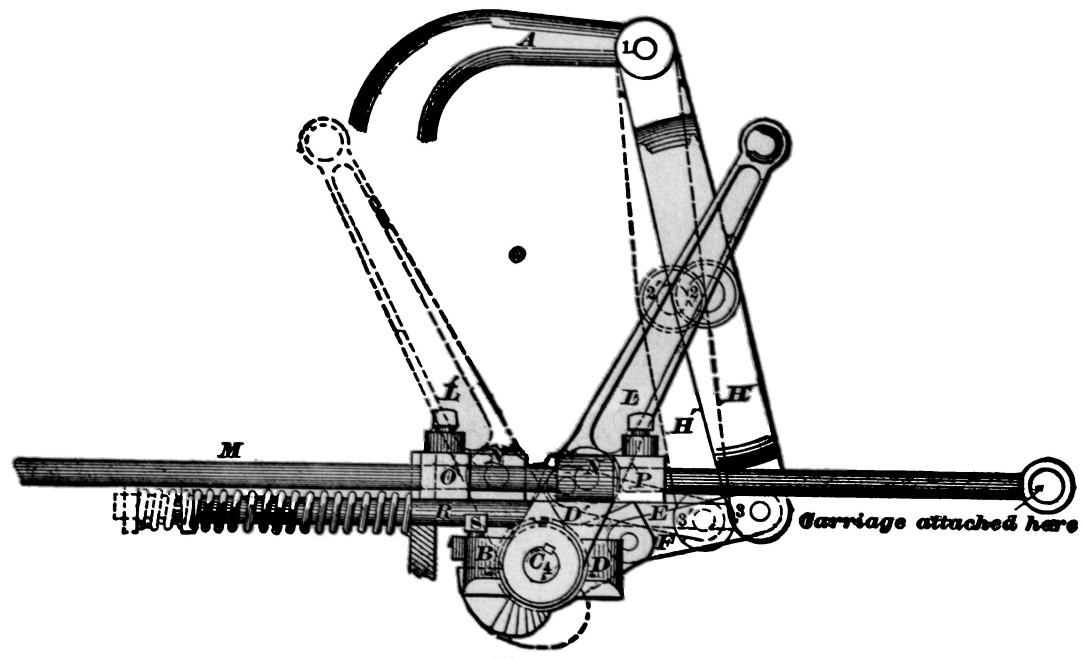

Fig. 1.

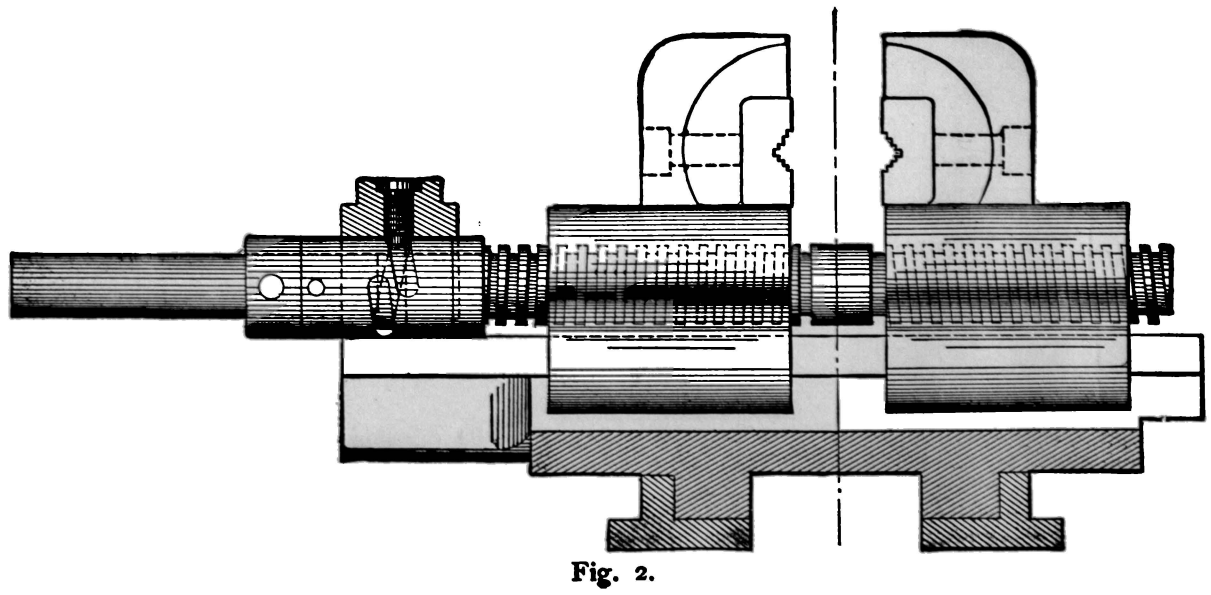

Fig. 2.

to hold the dies to their cut than to release them from it, and on that account the lower curved rocking arm D connects through E to a solid plunger G, the screw H abutting against the end of G and not threading into it, because G is only operative in pushing B forward in conjunction with P, while P pulls B backward, the duty being light. It is obvious, however, that after the adjustment screw I is operated to set the dies to cut to the proper diameter, adjustment screw H must be operated to bring the ring B fair and true upon *a a* and prevent any lateral strain that might otherwise ensue.

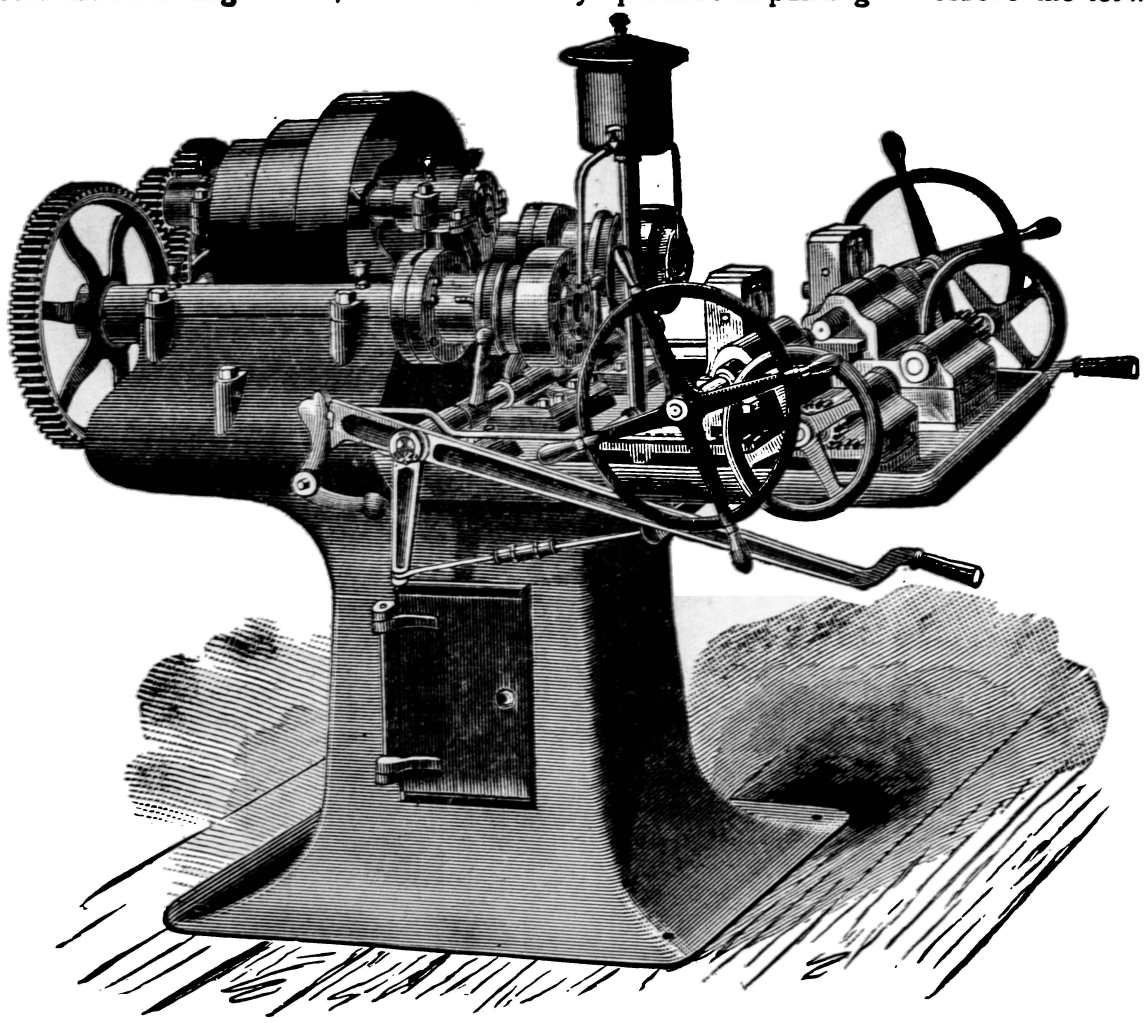

Fig. 1828.

These two adjustments being made, the clutch ring C is operated to the left to its full limit of motion to open the dies and to its full limit to the right to close them.

It will be seen, by the lines that are marked to pass through the pivoting pins of the rocking lever D, that the joints marked 2 in Fig. 1832 are below these lines, and as a result the links E form in effect a toggle joint, locking firmer in proportion as the strain upon them is greater.

Plate CIX. represents the Adams double head one-inch bolt cutting machine with automatic opening and closing device for the chasers or dies.

This device consists of a cam groove *a* in the head, a spring seated actuating pin *e* therefor, and returning cams *c c* for said pin, all operated by the power of the machine, thus furnishing a positive and powerful but easy action, making the stripping of bolts an impossibility. The opening action is controlled by the adjustable collar *d*, fixed on a rod, attached to the sliding carriage and operated thereby to release the actuating pin during the feed of the carriage, and the closing of the head is accomplished by the rear adjustable collar on same rod, operating a closing lever as the carriage is returned to position. The split head relieves the bolt when threaded, and permits the escape of the chips.

Plate CX. represents the National Machinery Company's bolt cutter.

Referring to the opening and closing mechanism (Fig. 1).

Above the forward main spindle bearing is fixed a bracket, to which is pivoted the ring lever designated by the letter H. This ring carries blocks which engage with the sliding ring on the head, and is moved back and forth at the bottom by means of the link F, which connects with a short lever arm which is on the shaft C_4. The rod R, having the spiral spring at one end, is also connected with the ring lever H, and tends constantly to draw it to the left and open the head.

When the parts are in the position shown by the full lines, the three centres joining the lower end of the ring H, the link F and the short lever arm are in line, and the parts are thereby locked in position. The lever L is attached to the shaft C_4, and carries upon its side a block D, through which passes the rod M, carrying two tappet collars O and P. This rod is attached to the carriage, and, as it moves up, the collar P comes in contact with the block D', and moves the lever L to the left. As soon as sufficient movement takes place to raise the end of the link F a short distance, the coiled spring draws the lever rapidly backwards, and opens the head. The set-screw S is adjusted to prevent the lever L moving too far to the right, or beyond the point at which the locking takes place. When the carriage is drawn back, the collar O acts to close the head. By moving the collars out of the way the head can be opened and closed by hand.

The method of centring the jaws is shown at Fig. 2, where a right and left-hand screw is journalled in a sleeve, which has two spiral slots cut upon its outer surface, into one of which projects a short pin, and into the other a screw which bears upon the bottom of the slot. By loosening the screw the sleeve can be rotated slightly either way, and the screw and both jaws moved bodily either way, after which the screw can be tightened.

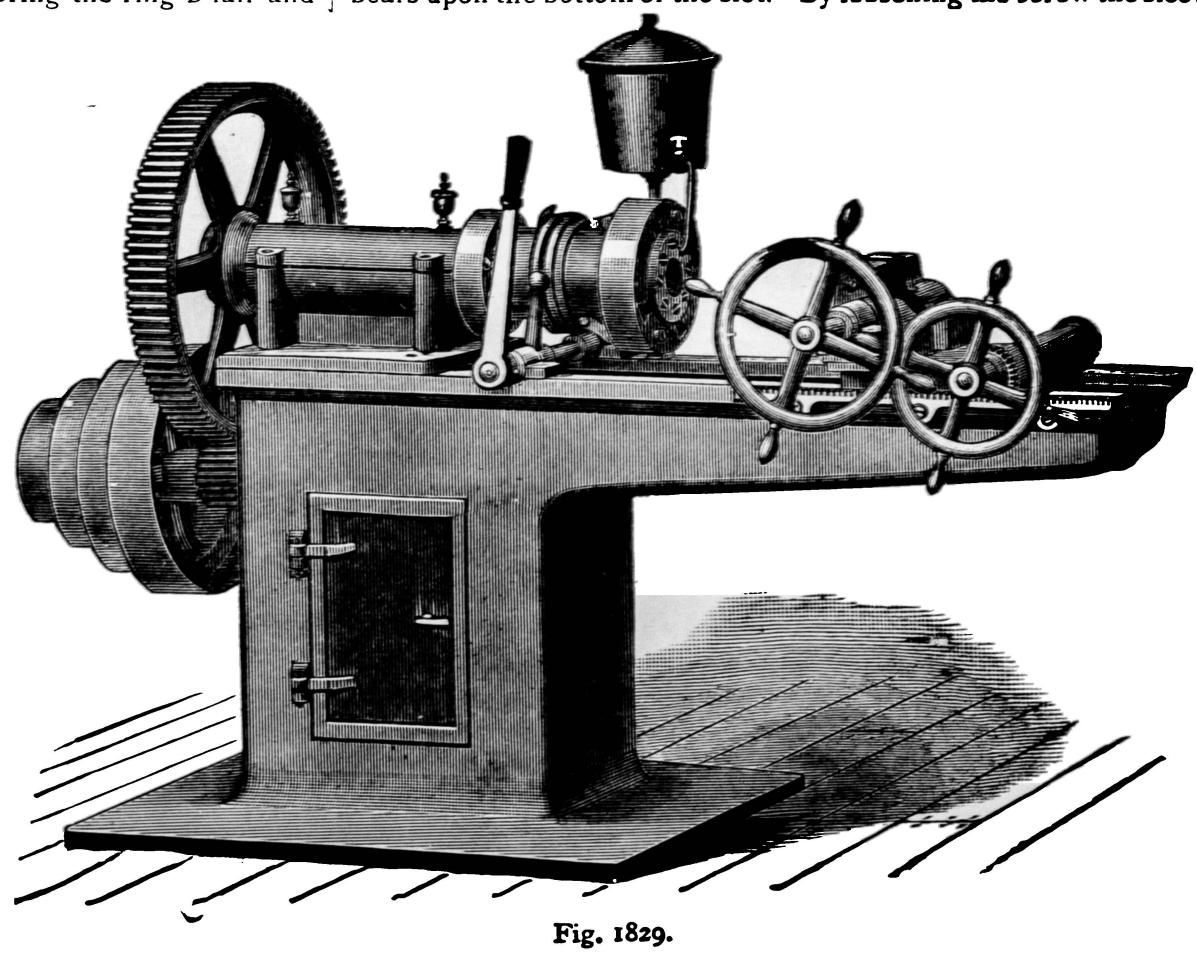

Fig. 1829.

Fig. 1834 represents a bolt threading machine having two heads, each capable of threading bolts from ½ up to 1½ inches in diameter.

The levers for operating the clutch rings are here placed

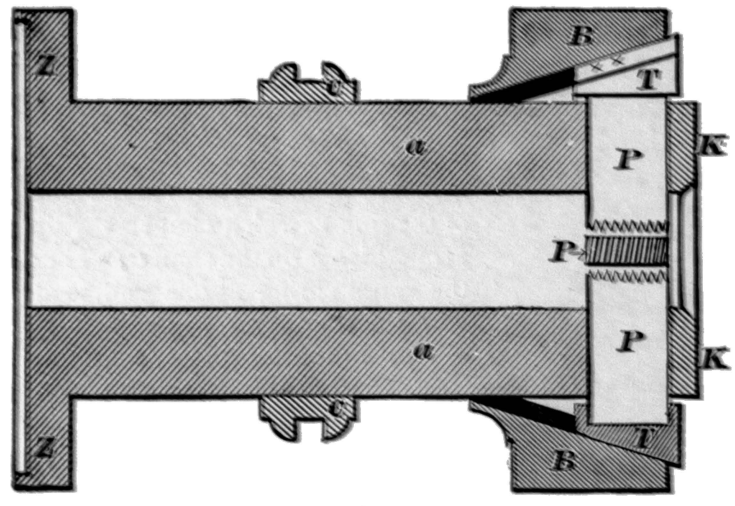

Fig. 1830.

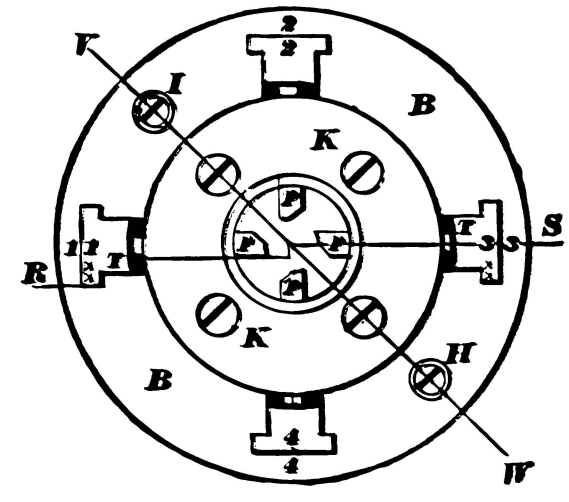

Fig. 1831.

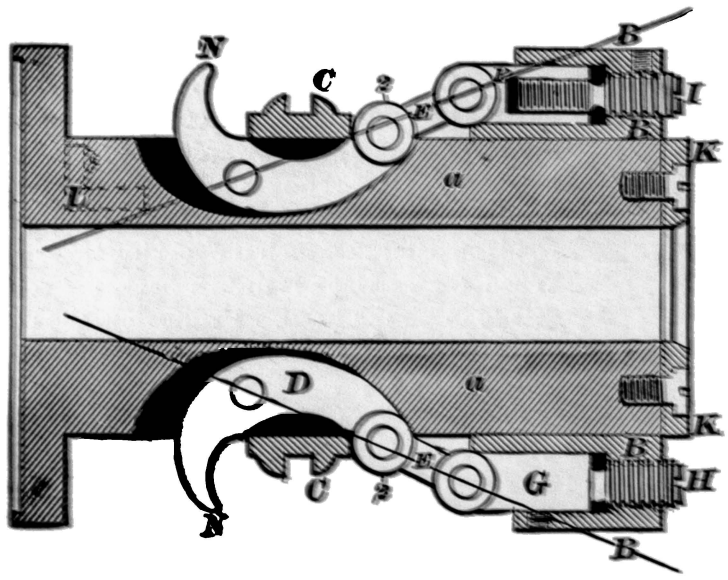

Fig. 1832.

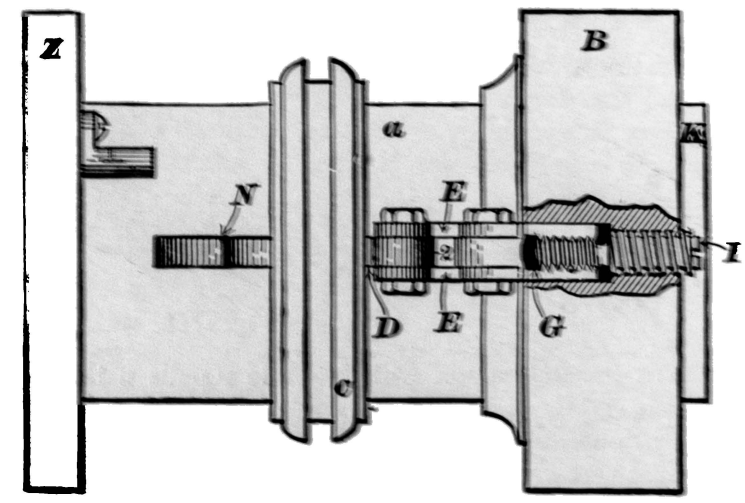

Fig. 1833.

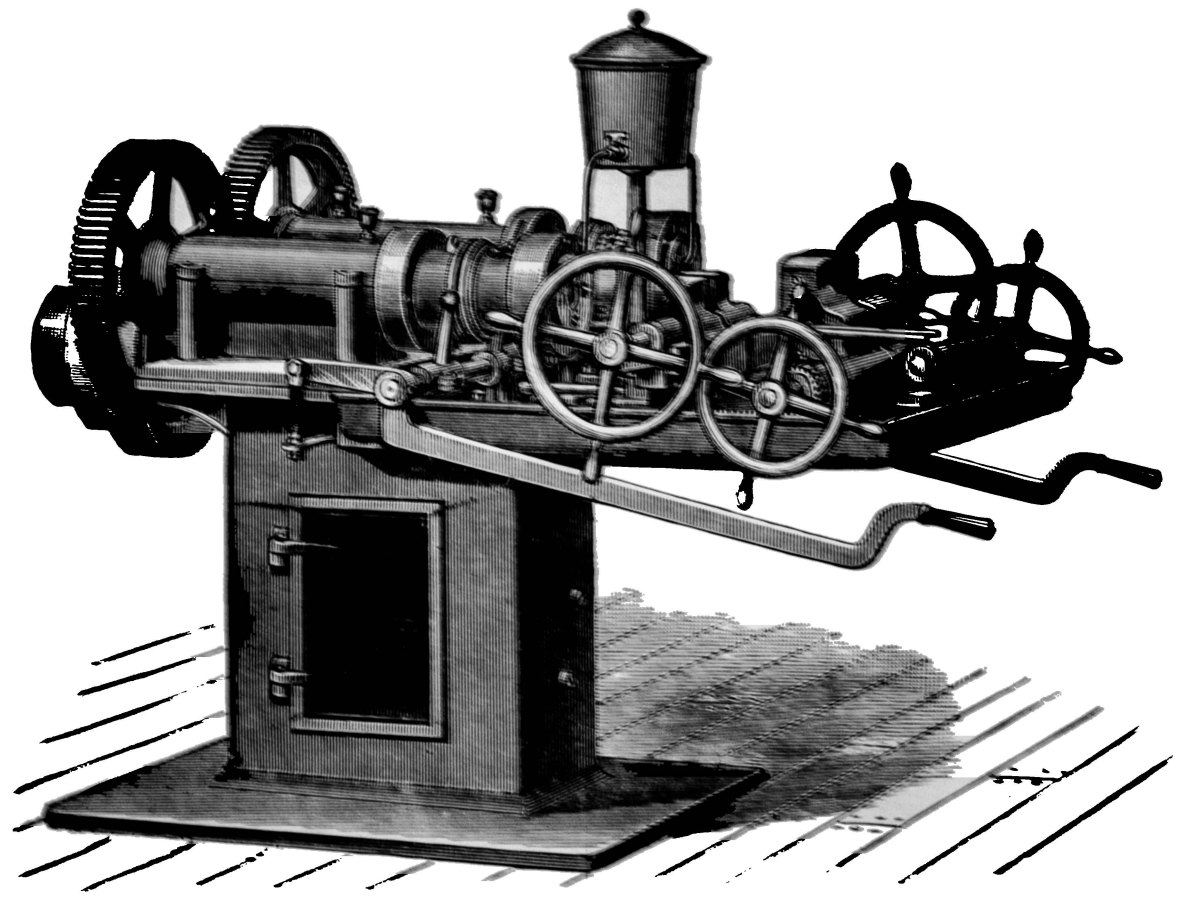

Fig. 1834.

horizontal, so that they may extend to the end of the machine and be convenient to operate, and a pump is employed to supply oil to the dies.

The capacity of a double machine of this kind is about one ton of railroad track bolts per day of 10 hours' working time.

In American practice it is usual to employ four cutting dies, bits, or chasers, in the heads of bolt threading machines, while in European practice it is common to employ but three. Considering this matter independently of the amount of clearance given to the teeth, we have as follows :—

If a die or internal reamer the,cutting points of which were all equidistant from a common centre, were placed over a piece of work, as a bar of iron shown in Fig. 1835, and set to take a certain cut, as shown by the circle outside the section, it is evident that if revolved, but left free to move laterally, or "wabble," the cutter would tend to adjust itself at all times in a manner to equalize the cutting duty—that is, if the die had two opposite cutting edges or points, and the piece operated upon were not of circular form, then, when one cutter reached the part that was not round, it would have either more or less cutting to do than before, and hence, the opposite cutter having the same amount, the tendency would be for the two cutting edges to travel over and equalize the cuts, and hence the pressure. With three cutting points, no two being opposite, the tendency would all the while be to equalize the cuts taken by all three; with four, spaced equally, the tendency would always be to equalize the cuts of those diametrically opposite; with five, the tendency would be to equalize the duty on each, and so on. Thus it will be noticed that there is a difference between the acting principle of a die having an even or an odd number of cutters, independent of the

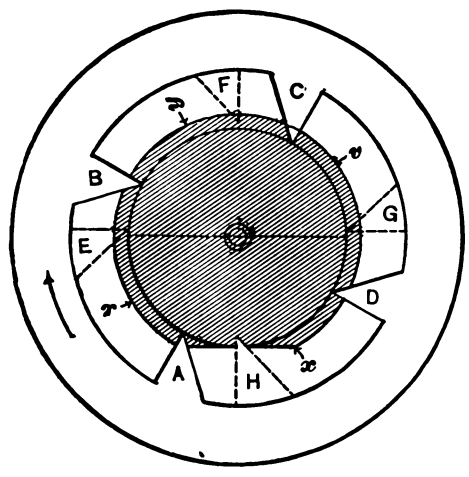

Fig. 1835.

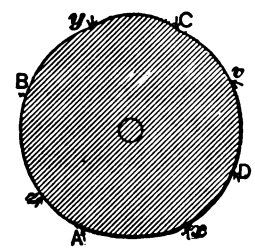

Fig. 1836.

difference in the actual number of cutting edges, or points, as we are now considering them.

To take an example, in Fig. 1835 is represented a die having four cutting points, placed upon a piece of iron of a round section, with the exception of a flat place, as shown. Now, in this position each one of the cutting points A, B, C, and D, is in contact with the true cylindrical part of the work only; hence, if the die were set to take the amount of cut shown, each point would enter the iron an equal distance, and the inner circle through the points would be the smallest diameter of the die. Upon revolving the die in the direction denoted by the arrow, an equal cut would continue to be taken off, and hence the circular form maintained, until cutter D had reached the edge x of the flat, the opposite one B, being at y (A at r and C at v), proceeding as D moved from x towards A, its cutting duty would continually become less and its pressure decrease, but as it is the cutting pressure of D that holds the opposite point B to its cut, as the pressure in D, after reaching x, continually becomes less, the die would gradually travel over so as to carry D toward the centre and cause it to take more cut, while B, on the opposite side, would travel out a corresponding distance and take less, thus keeping the duty equalized until the cutter D had reached H, the lowest part of the flat, when the die would have moved the greatest distance off the centre, assuming the position shown by dotted lines. Thus the cutting point at H has passed inside the true circle that all the cutters commenced to follow, while F has passed outside. Meanwhile, as H and F have shifted over, E and G have, of course, moved an equal amount and in the same direction, but the diameter of E and G being at right angles to that of H and F, the distances of E and G from the centre would be changed but an infinitesimal amount; hence, they would virtually continue to follow the true circle, notwithstanding the deviation of the other pair. As the die continues to revolve and H passes toward A, the lateral motion is reversed, the die tending to resume its original central position, which it does upon the completion of another quarter of a revolution, when the cutter that started at D has passed to H and finally to A. A cutting has now been removed from the entire circumference of the iron, leaving it of a form shown approximately in Fig. 1836, where A z, B y, C v, and D x, are the four true circular portions

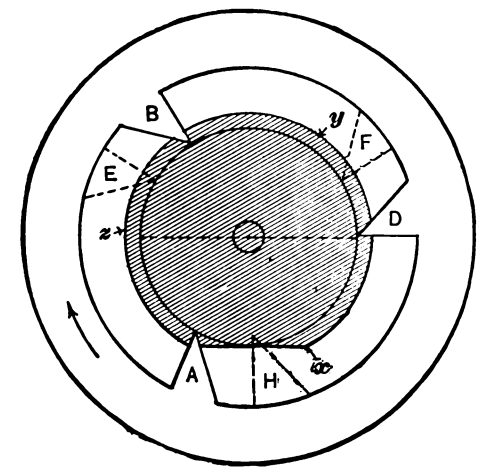

Fig. 1837.

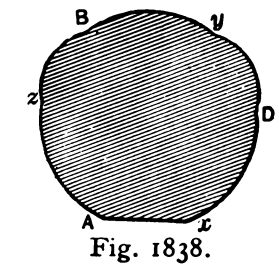

Fig. 1838.

cut respectively by the points A, B, C, and D, before the flat place was reached. After the flat place was reached x A is the depression cut by D, y C the elevation formed by B, and z B and v D are the arcs, differing almost imperceptibly from the true circular ones cut by A and C.

Fig. 1837 represents a die having three instead of four cutting points—that is, the point C of Fig. 1835 is left out, and the remaining ones A, B, and D, are equally spaced. This, placed upon a similar bar and taking an equal cut, would produce a truly circular form until D had reached x—with A and B at z and y—after which the die would move laterally, tending to carry D toward the centre of the work and A and B away from it, so as to equalize the cuts on all three. Hence, when D had reached H and the three-cutter die attained the position shown by dotted lines in Fig. 1837, H would have made an indentation inside the true circle, while E and F have travelled away from it, thus forming protuberances. From H to A the lateral movement is reversed, and finally upon the completion of a third of a revolution, the die is again central and a cut has been carried completely around the bar, leaving it as shown in Fig. 1838. Comparing this with Fig. 1836,

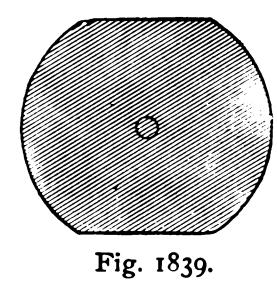

Fig. 1839.

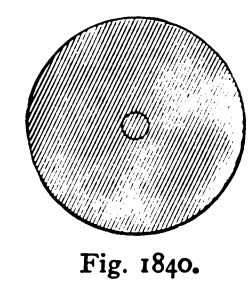

Fig. 1840.

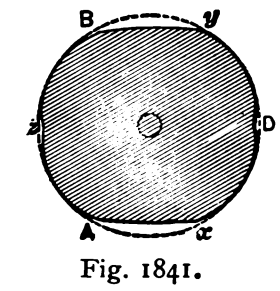

Fig. 1841.

it will be seen that there are three truly cylindrical portions—viz., A z, B y, and D x—instead of four in Fig. 1836, but each one is longer; that there is a depressed place, x A, of equal length to that in Fig. 1836, and two elevations, z B and y D, each of equal length to the one (y C) in Fig. 1836.

Now, suppose the bar to have an equal flat place on its opposite side, becoming of a section shown in Fig. 1839, upon applying the dies and pursuing a similar course of reasoning, the die with four points would reduce the bar to the size and shape shown in Fig. 1840, or a true cylinder, while the triple-pointed cutter would produce the form shown in Fig. 1841, which is a sort of hexagon, coinciding with the true circle in six places—A, z, B, y, D, and x—while between A and z, and opposite, between y and D, there is an elevation; also from z to B and from D to x. A flattened

portion, A x, with a similar one B y, opposite, completes the profile. Suppose, now, that a bar of the form shown in Fig. 1842, having two flat places not opposite, be taken, and the four-cutter and three-cutter dies are applied. The product of the four is shown in Fig. 1843, and that produced by the three-cutter die in Fig. 1844. The section cut with four coincides with the true circle at four points, A, B, C, D, and differs from it almost imperceptibly at z, y, v, and x. There are two elevations between A and B and between B and C; also two depressions between C and D and between D and A. The section from the three-cutter die is the perfect circular form between A z, B y, and D x, with a projection from z to B and two depressions from y to D and from x to A. The four-die, applied to a section having three flats like Fig. 1845, would produce Fig. 1846, which does not absolutely coincide with the true circle at any point, although the difference is inconsiderable at A, z, y, C, v, and x; three equidistant sections A z, y C, and v x, are elevated and the three alternate ones depressed.

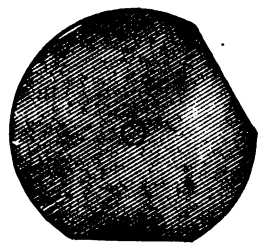

Fig. 1842.

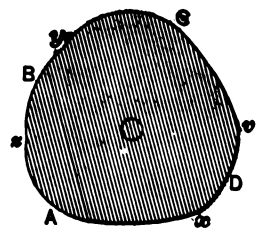

Fig. 1843.

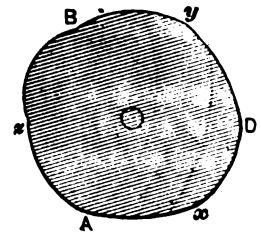

Fig. 1844.

The three-cutter die would in this case cut the perfectly circular form of Fig. 1847.

Now, suppose both of the dies to have been made or set to some certain diameter—in fact, presume them to be made by taking a ring of steel having a round hole of the required diameter, say 1 inch, and removing the metal shown by the dotted lines, Fig. 1848, and leaving only the four cutting points in one case (and the three in the other). Then it is evident that our dies are both of the same diameter, and likewise both of the assumed diameter, or 1 inch; then it is fair to presume that the plugs or sections just cut by either one of the dies should enter a round hole of the same diameter as the dies; but it is obvious that only two, Figs. 1840 and 1847, will do so, all the rest being considerably too large, from their irregularity of form, notwithstanding the fact that the diameter of any of those cut by four cutters is never more than that of the die, while any one of the equal radii, taken at equal distances on any of the forms cut by the three-cutter die, will not

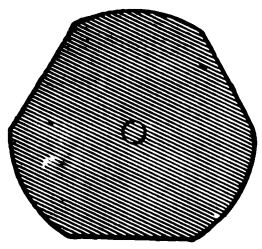

Fig. 1845.

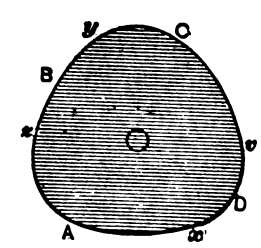

Fig. 1846.

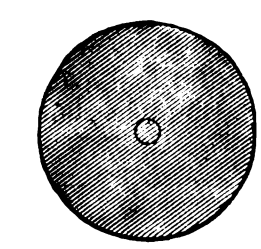

Fig. 1847.

exceed the radius of the die. Now, six of the pieces being too large when referred to the standard of a round hole of the size of the die, while two are of the correct size, it is obvious that if the four-die, for example, which cut Fig. 1846, were reduced enough to make Fig. 1843 just enter the standard, that, Fig. 1840, which is now just correct in size and form, would, when cut, be altogether too small. The same would be the case also with the three-cutter die.

Now let us consider the two productions (Figs. 1840 and 1847) that answer the requirements, the two different sections (Figs. 1839 and 1845) from which they were cut, and also the other two pieces (Figs. 1841 and 1846) that were cut from the same bars at the same time. The general shape of Fig. 1839, is oval or four-sided, and while the four cutters operated upon it to produce perfectly circular work, the three cutters reproduced the general shape started with, only somewhat modified, as Fig. 1841 plainly shows. Upon the blank, Fig. 1845, the general shape of which is triangular, the very opposite is the case, for the three cutters now produce a perfect circle, while the four modify only the figure that they commenced to operate upon.

Considering that every irregular form may be approximated by a square, an equilateral triangle, or in general by either a parallelogram or a regular polygon, it will be found that from a flat, oval, or square piece of metal the four cutters will produce a true circle; from a triangular piece the three; from a heptagon neither will do so, while from a hexagon both the three and four

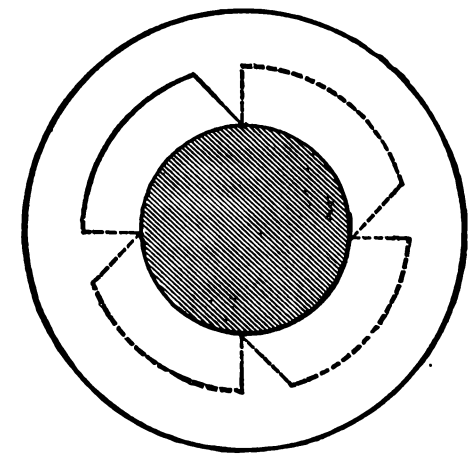

Fig. 1848.

cutters are calculated to do so. Following in the same manner, and increasing the sides, it will be found that the four cutters will produce a true circle from every parallelogram, whether all the sides are equal or not, while the three cutters will produce a true circle also from every regular polygon the number of sides of which is a multiple of three—that is, four cutters would operate correctly upon a figure having 4, 6, 8, 10, 12, &c., parallel sides, while the three would do so upon a figure having 3, 6, 9, 12, 15, &c., equal sides. Thus, for regular forms varying between these two series neither one would be adapted. Hence, if the general form of the work is represented by the first series, the four cutters are the best; if the general and average form of the material to be operated upon corresponds to the second series, then the three dies are the best adapted, so far as their two principles of action, mentioned at the outset, are concerned; hence, if it is considered that the material or bars of metal to be wrought vary from a circular form indifferently, then there is no choice between an even and an odd number merely on that account.

Placing the same dies that cut these six irregular figures upon their respective productions would not serve to correct their form; as, for instance, if the die that cut Fig. 1846 were revolved around it—even if set up or reduced in diameter to take a cut—it would remove an equal amount all round and leave the same figure still.

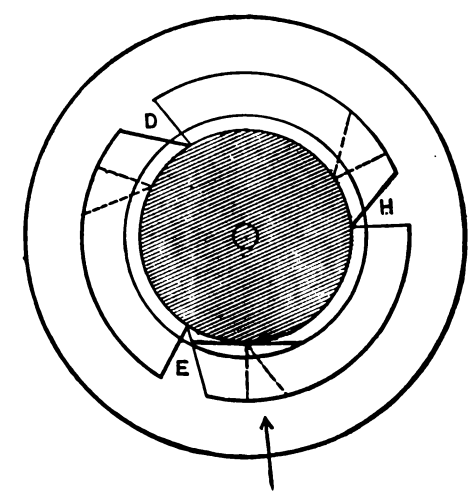

Fig. 1849.

Similarly with, say, Fig. 1841, cut by the three; but if the three were run over Fig. 1846, cut by the four, it would tend to correct the errors, and likewise if the four were run over Fig. 1841, the tendency would be to modify the discrepancies left by the three that cut it.

As regards the number of cutting points, suppose that there were a certain number, as three, shown in Fig. 1849, all taking an equal cut; then, when the position indicated by the dotted lines

was reached, where cutter H runs out, the entire duty would be only two-thirds as much as it was, and the die would shift laterally in the direction of the arrow enough to equalize this smaller amount of duty on all three, or make H, E, and D each cut two-thirds as much as at first. With four as shown in Fig. 1850 when H reached the depression where its cut would run out, the entire duty would be three-fourths of what it was at first, and the die would travel laterally in the direction of the arrow sufficiently to equalise the pressure upon H and F, and upon E and G. With five, as shown in Fig. 1851, in similar position the entire duty would be four-fifths as much; with six, five-sixths, and so on. Thus it can be seen that the variation between the least amount to be cut and the full amount is relatively less, the greater the

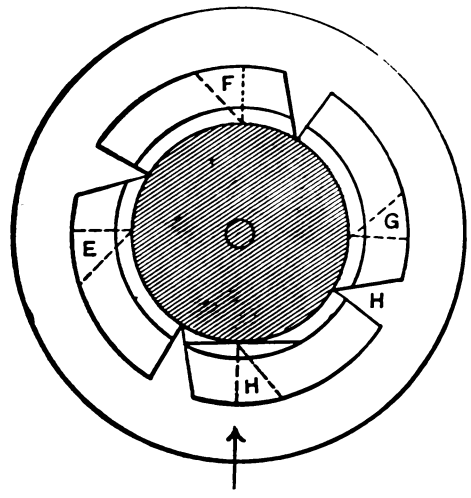

Fig. 1850.

number of cutting points that it is divided between, and hence the lateral movement would be less; therefore the general tendency of an increase in the number of cutting points would be to promote true work.

Hence, from these considerations it appears that it is not material whether the number is odd or even merely on that account; so four would be preferable to three only on account of being one more, and, in turn, five would be better than four, and six better than five, and so on. It is found, however, that bar iron usually inclines to the elliptical form, and that an even number is, therefore, preferable.

Thus far the cutting edges of the die have been assumed to be

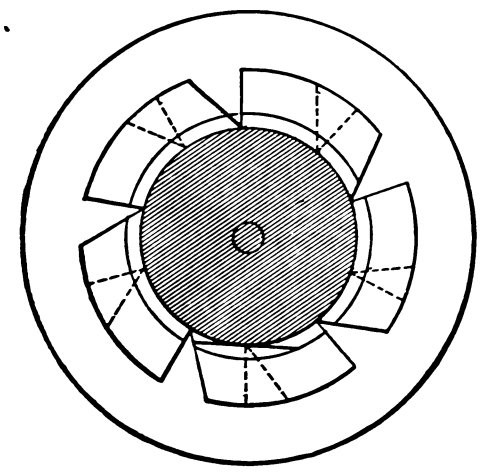

Fig. 1851.

points equidistant about a circle—that is, it has been supposed to have absolute clearance, so that its movements would be regulated entirely by the depth of cut taken, in order to ascertain the inherent tendency to untruth caused by an odd or an even, a greater or a less, number of cutters. This tendency is, of course, modified in each case by the amount of clearance.

The position of the dies in the head and with relation to the work is, in bolt cutting machines, a matter of great importance, and in all cases the dies should be held in the same position when being hobbed (that is, having their teeth cut by the hob or master tap) as they will stand in when put to work, and the diameter of the hob must be governed by the position of the dies in the head. If they are placed as in Fig. 1852 the diameter of the hob must be $\frac{1}{32}$ inch larger than the diameter of bolt the dies are intended to thread, so that the point or cutting edge may meet the work first and the heel may have clearance, it being borne in mind that the clearance is less at the tops than it is at the bottoms of the teeth, because of their difference in curvature. In this position the teeth are keen and yet retain their strength, acting somewhat as a chaser. If placed in the position shown in Fig. 1853 the hob or master tap must be $\frac{1}{32}$ inch smaller than the diameter of bolt they are to thread, so as to give the teeth clearance. In this case the dies are somewhat harder to

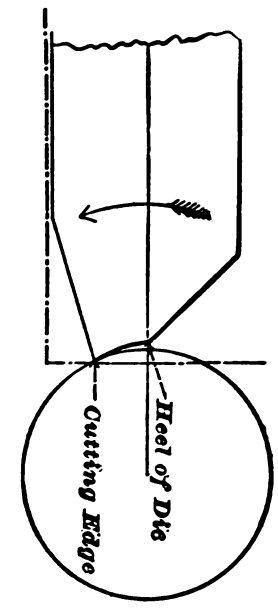

Fig. 1852.

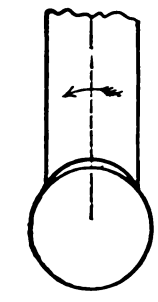

Fig. 1853.

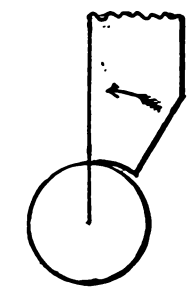

Fig. 1854.

feed in to their cut and do not cut quite so freely, but on the other hand they work more steadily as the bolt is better guided, while left-hand dies may be used in the same head. If placed as in Fig. 1854 they must be cut with a hob $\frac{1}{32}$ inch larger in diameter than the bolt they are to thread, so that the teeth will have less curvature than the work, and will, therefore, have clearance. In this position the dies do not cut so freely as in Fig. 1852.

The dies should be broad enough to contain at least as many teeth as there are in a length of bolt equal to its diameter, and should be thick enough to withstand the pressure of the cut without perceptible spring or deflection.

The cutting edges of dies may be brought in their best cutting position and the dies placed in radial slots in the head by forming the dies as in Fig. 1855. Face X is at an angle of 18° to the leading or front face of the die steel, and the heel is filed off at an angle of 45° and extends to the centre line of the die. This gives a strong and a keen die, and by using a hob $\frac{1}{32}$ inch

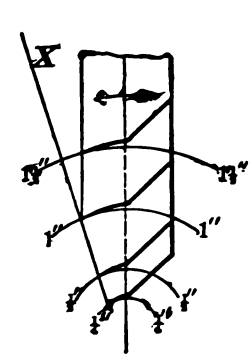

Fig. 1855.

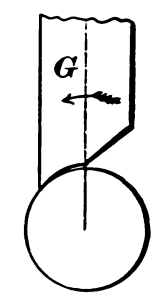

Fig. 1856.

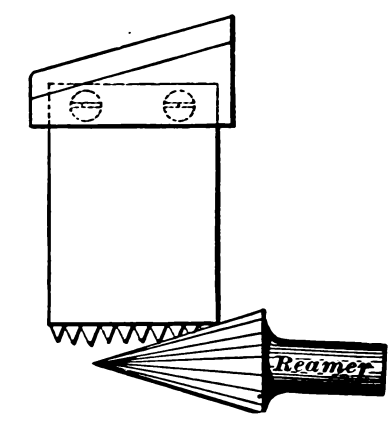

Fig. 1857.

smaller than the diameter of bolt to be cut, the clearance is sufficiently maintained.

The heel of the die should not when the cutting edge is in front extend past the axis of the work, but should be cut off so as to terminate at the work axis as denoted by the dotted line G in Fig. 1856.

In hobbing the dies it is necessary that they be all of equal length so that the hob may cut an equal depth in each, and may, therefore, work steadily and hob them true. After the dies are hobbed their front ends should be reamed with a taper reamer as in Fig. 1857, chamfering off not more than three threads, and the chamfered teeth must then be filed, just bringing the front

edges up to a cutting edge, but filing nothing off them, the reamed chamfer acting as a guide to file them by.

This will cause each tooth to take its proper share of the cut, thus preserving the teeth and causing the dies to cut steadily. Back from the cutting edge towards the heels of the teeth the clearance may gradually increase so that the heel will not meet the work and cause friction.

The chasers or dies are obviously changed for each diameter of bolt, and it follows that as the chasers all fit in the same slots

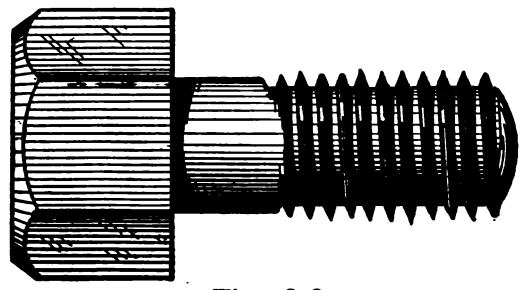

Fig. 1858.

in the head they must all be made of the same size of steel whatever diameter of bolt they are intended to cut, and this leads to the following considerations.

Suppose the capacity of the machine is for bolts between $\frac{1}{4}$ inch and $1\frac{1}{4}$ inches in diameter, and the size of the chaser or die will be $1\frac{1}{4}$ inches wide and $\frac{1}{2}$ inch thick.

The width of a die or chaser should never be less than the diameter of bolt it is to thread, so that it may contain as many threads as are contained in a length of bolt equal to the bolt

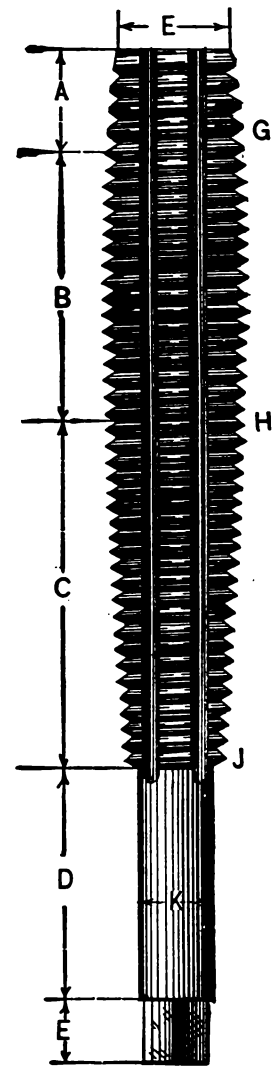

Fig. 1861.

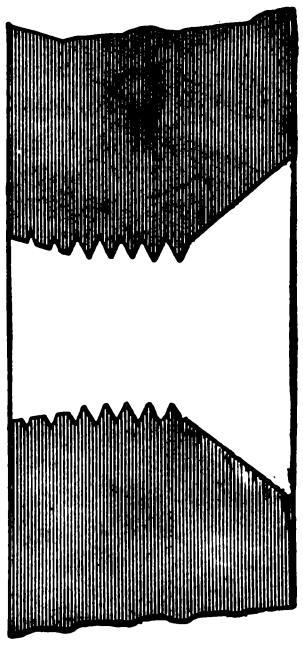

Fig. 1859.

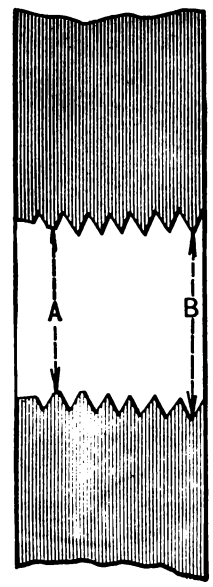

Fig. 1860.

diameter. Now the $1\frac{1}{4}$-inch chaser equals in width the diameter of bolt it is to cut, viz. $1\frac{1}{4}$ inches; but if the chaser for $\frac{1}{4}$-inch bolts was threaded parallel and left its full width it would be five times as wide as the diameter of the bolt and the thread cut would be imperfect, because the chasers alter their pitches in the hardening process, as was explained with reference to taps, and it is found that the error induced in the hardening varies in amount and sometimes in direction: thus of the four chasers three may expand and become of coarser pitch, each varying in degree from the other two, and the other may remain true, or contract and become of finer pitch.

As a rule the dies expand, but do not so equally. The more teeth there are in the die the more the pitch error from the hardening; or in other words, there is obviously more error in an inch than there is in half an inch of length. Suppose then that we have a die for 20 threads per inch, and as the chaser is $1\frac{1}{4}$ inches wide, it will contain 25 teeth, and the amount of pitch error due to $1\frac{1}{4}$ inches of length; and this amount not being equal in all the chasers, the result is that the dies cut the sides of the thread away, leaving it sharp at the top but widened at the bottom, as shown in Fig. 1858, weakening it and impairing its durability while placing excessive duty on the dies and on the machine.

A common method of avoiding this is to cut away all the teeth save for a width of die equal to the diameter of the bolt, as shown in Fig. 1859. An equally effective and much simpler plan is to form the dies as in Fig. 1860, the diameter at the back B being slightly larger than that at the mouth A, so that the back teeth are relieved of cutting duty. This enables the dies to undergo more grindings and still retain sufficient teeth. For example, the chamfer at A may be ground farther towards B, and still leave in action sufficient teeth to equal in width of chaser the diameter of the bolt. To enable the threading of dies in this manner the hobs or master taps employed to thread them are formed as in Fig. 1861, the proportions of the master taps for the different sizes of bolts being as given in the following table:—

Diameter of bolt.	—	—	Length at A.	Length at B.	Length at C.	Length at D.	Length at E.
$\frac{1}{4}$	Dia. from G to H $\frac{15}{64}$	At J $\frac{7}{32}$	$\frac{1}{2}$	1	1	$1\frac{1}{4}$	$\frac{1}{2}$
$\frac{5}{16}$	" " $\frac{19}{64}$	" $\frac{9}{32}$					
$\frac{3}{8}$	" " $\frac{23}{64}$	" $\frac{11}{32}$					
$\frac{7}{16}$	" " $\frac{27}{64}$	" $\frac{13}{32}$					
$\frac{1}{2}$	" " $\frac{31}{64}$	" $\frac{15}{32}$					
$\frac{9}{16}$	" " $\frac{35}{64}$	" $\frac{17}{32}$					
$\frac{5}{8}$	" " $\frac{39}{64}$	" $\frac{19}{32}$					
$\frac{11}{16}$	" " $\frac{43}{64}$	" $\frac{21}{32}$					
$\frac{3}{4}$	" " $\frac{47}{64}$	" $\frac{23}{32}$					
$\frac{13}{16}$	" " $\frac{51}{64}$	" $\frac{25}{32}$					
$\frac{7}{8}$	" " $\frac{55}{64}$	" $\frac{27}{32}$					
1	Dia. at G $\frac{31}{32}$	At J $\frac{1}{100}$ less	$\frac{1}{2}$	4	4	$1\frac{1}{2}$	1
$1\frac{1}{8}$	" $1\frac{3}{32}$	—	1	4	4	$1\frac{1}{2}$	1
$1\frac{1}{4}$	" $1\frac{7}{32}$	—	1	4	4	$1\frac{1}{2}$	1
$1\frac{3}{8}$	" $1\frac{11}{32}$	—	1	4	4	$1\frac{1}{2}$	1
$1\frac{1}{2}$	" $1\frac{15}{32}$	—	1	4	4	$1\frac{1}{2}$	$1\frac{1}{4}$
$1\frac{5}{8}$	" $1\frac{19}{32}$	—	1	5	5	2	$1\frac{1}{4}$
$1\frac{3}{4}$	" $1\frac{23}{32}$	—	1	5	5	2	$1\frac{1}{4}$
$1\frac{7}{8}$	" $1\frac{27}{32}$	—	1	6	6	2	$1\frac{1}{4}$
2	" $1\frac{31}{32}$	—	1	6	6	2	$1\frac{1}{4}$

All over 2 in. same length as the 2 in. Shanks J turned to bottom of last thread.

The cutting speeds for the dies and taps are as given in the following table, in which it will be seen that the speeds for bolt factories are greater than for machine shops. This occurs on account of the greater experience of the operators and the greater care taken in lubricating the dies and keeping them sharp:—

Diameter of bolt.	Revolutions of dies for machine shops.	Revolutions of dies for bolt factories.	Diameter of bolt.	Revolutions of dies for machine shops.	Revolutions of dies for bolt factories.
inch.			inch.		
$\frac{1}{8}$	450	600	$1\frac{1}{8}$	33	48
$\frac{1}{4}$	230	300	$1\frac{1}{4}$	30	45
$\frac{3}{8}$	150	200	$1\frac{3}{8}$	28	40
$\frac{1}{2}$	100	150	2	25	38
$\frac{5}{8}$	75	125	$2\frac{1}{8}$	23	36
$\frac{3}{4}$	65	100	$2\frac{1}{4}$	22	34
$\frac{7}{8}$	55	85	$2\frac{3}{8}$	21	32
1	45	75	$2\frac{1}{2}$	20	30
$1\frac{1}{8}$	42	65	$2\frac{5}{8}$	18	25
$1\frac{1}{4}$	40	60	$2\frac{3}{4}$	15	20
$1\frac{3}{8}$	38	55	$2\frac{7}{8}$	12	18
$1\frac{1}{2}$	35	50	3	10	15

Taps same speed as dies.

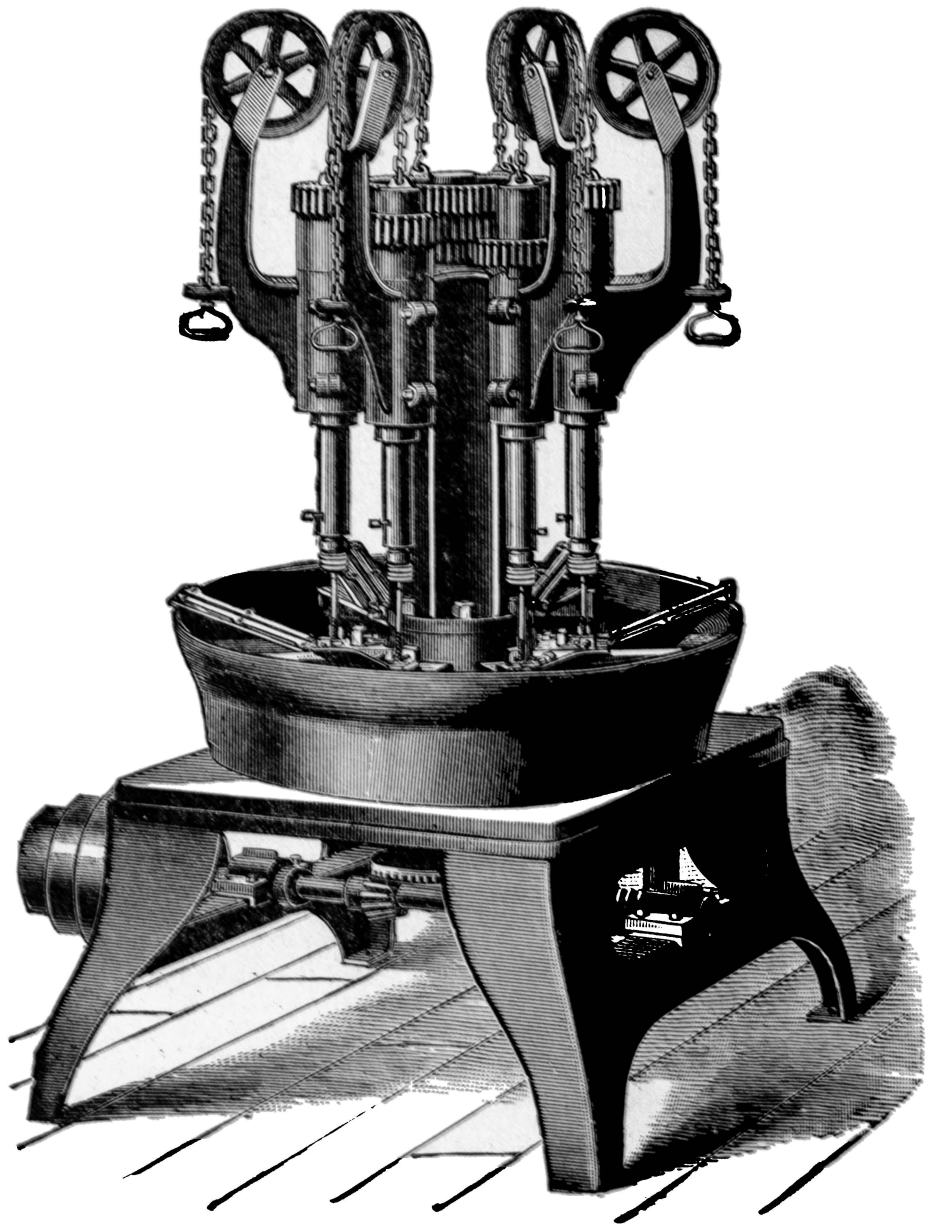

Fig. 1864.

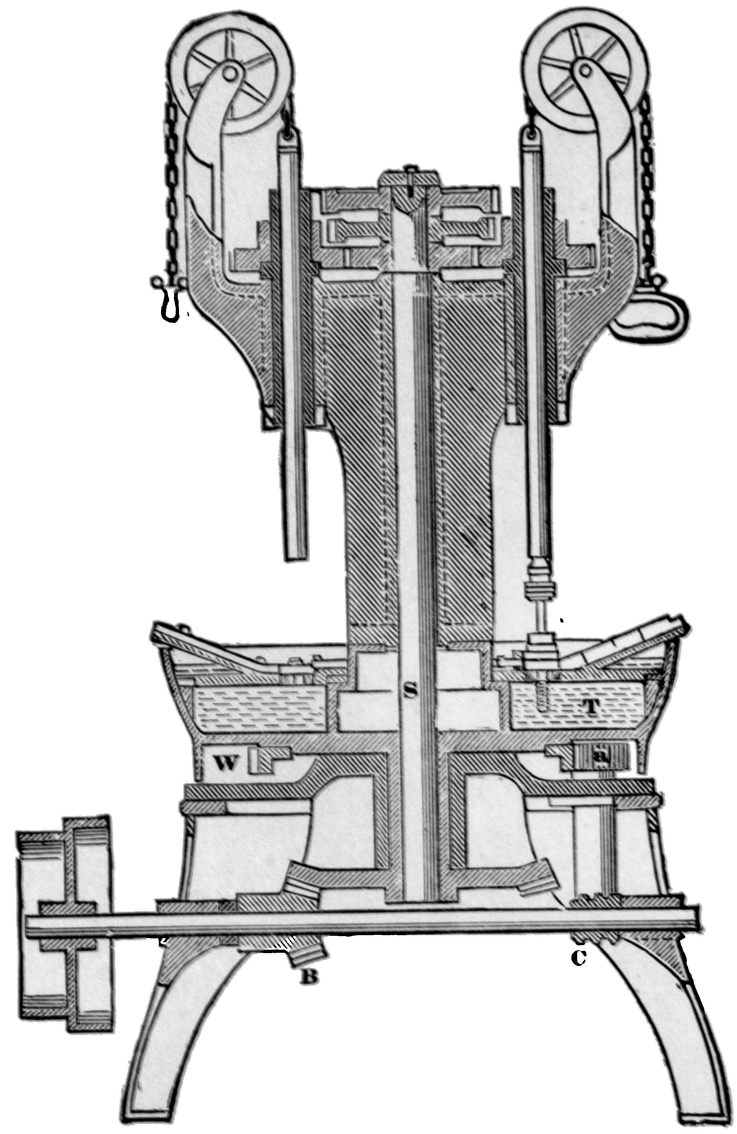

Fig. 1865.

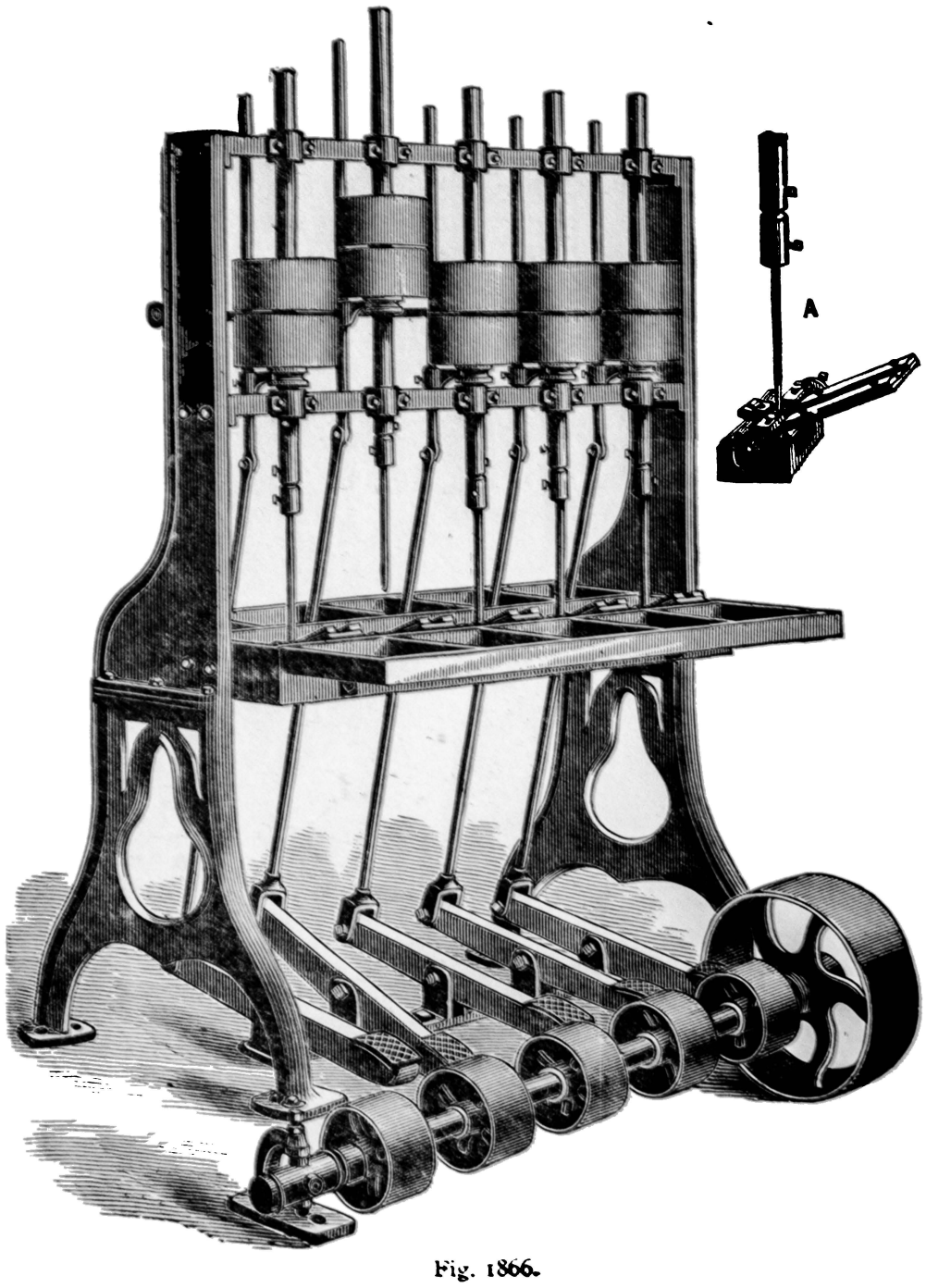

Fig. 1866.

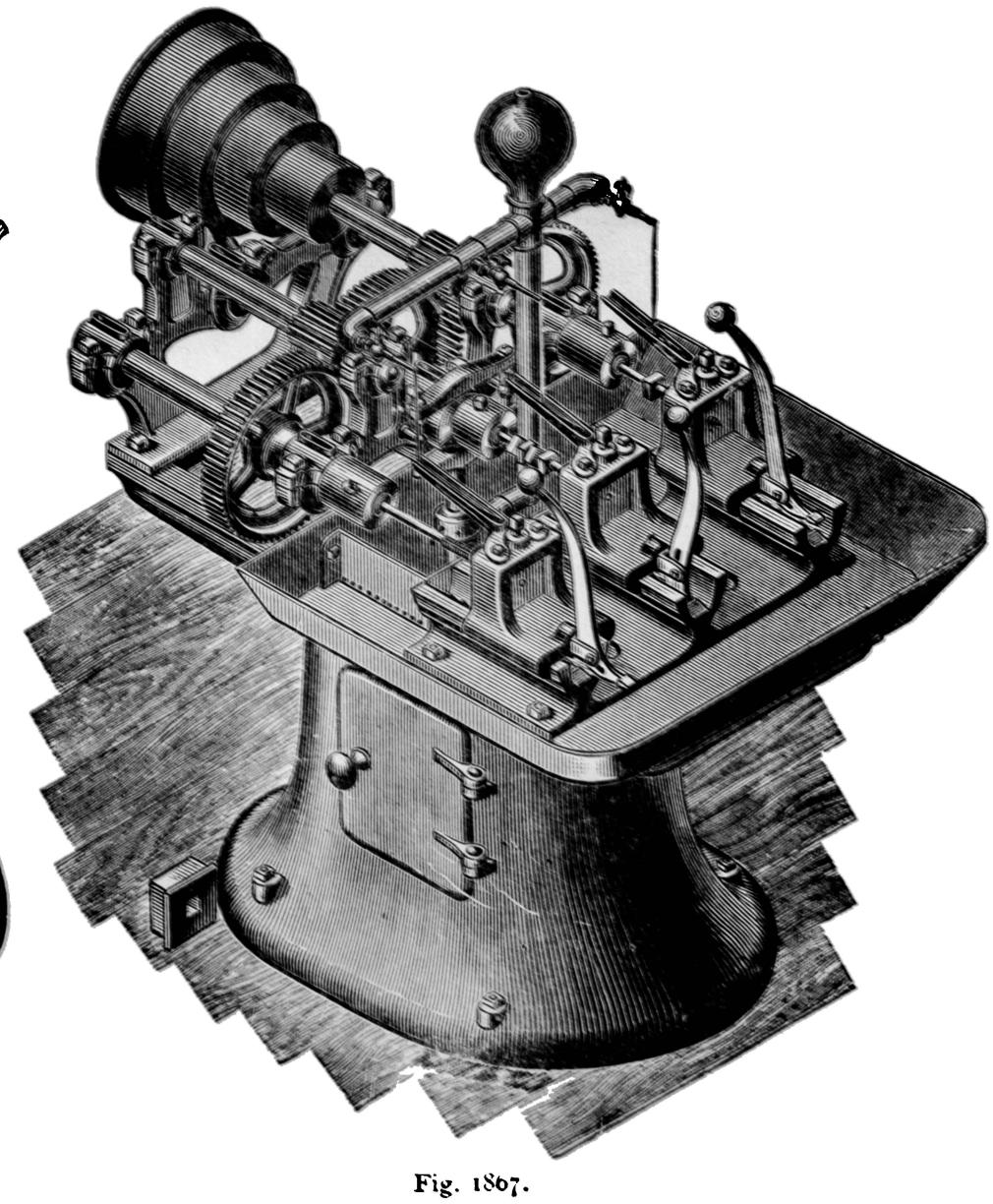

Fig. 1867.

In Fig. 1862 is represented a nut threading or tapping machine. The vertical spindles have spring sockets in which the taps are held, so that they can be inserted or removed without stopping the machine. The nuts are fed down the slots of the inclined plates shown on the upper face of the circular base, and the spindles are raised and lowered by the pivoted levers shown. The nuts lie in a dish that contains water up to the

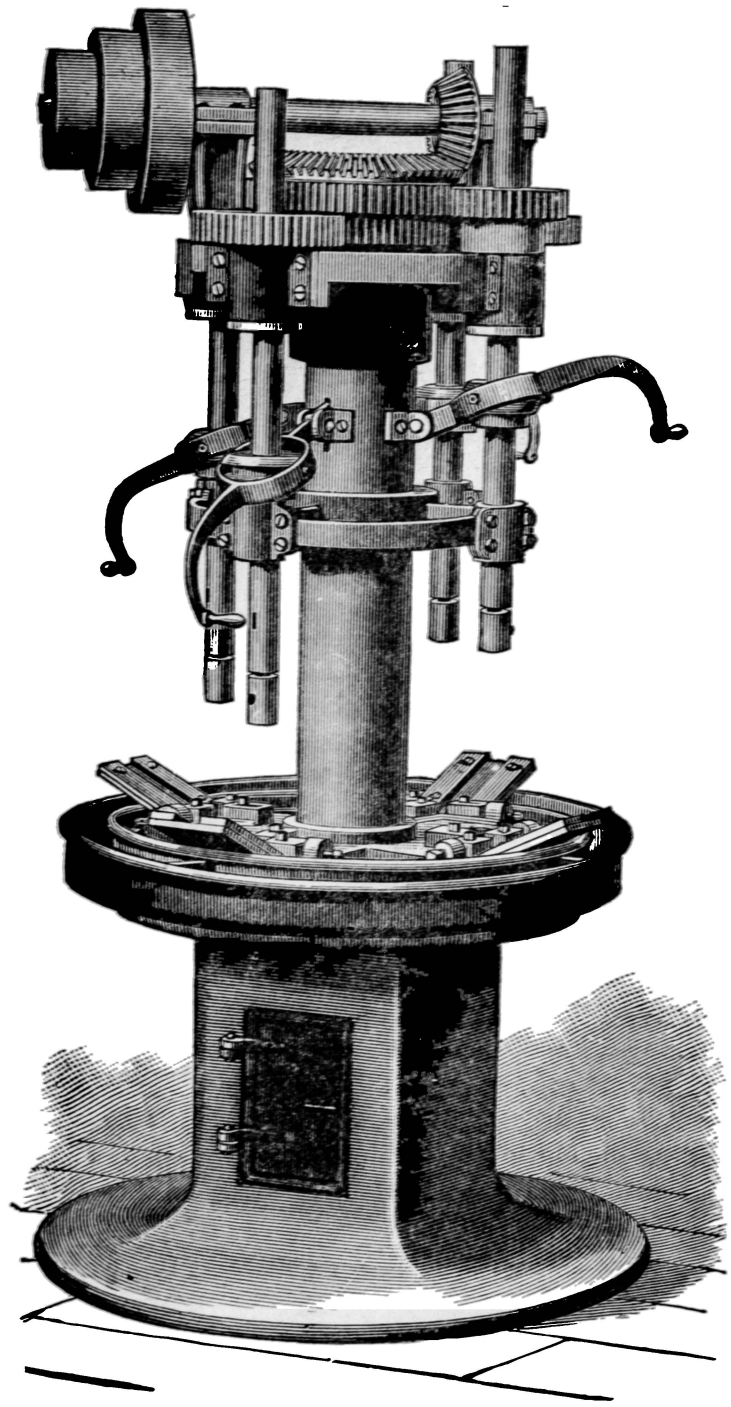

Fig. 1862.

level of the bottom of the nuts, the object being to prevent the taps from getting hot and therefore expanding in diameter. Upon the top of the water floats a body of oil about ½ inch deep, which lubricates the cutting edges of the tap. These machines are also made with six instead of four spindles, which in both machines run at different speeds to suit different sizes of nuts, and which are balanced by weights hanging inside the central hollow column or frame.

Fig. 1863 represents the socket for driving the tap, so devised that when the tap is strung for its intended length with nuts, the top nut releases the tap of itself, the construction being as follows: S is the socket that fits into the driving spindle of the machine; its bore, which fits the stem of the tap easily, receives two headless screws B, a pin P, which is a sliding fit, and the screw A. R is a ring or sleeve fitting easily to the socket, and is prevented from falling off by screw A. The tap is provided with an annular groove G. The flattened end of the tap passes up between and is driven by the ends of screws B, the weight of the collar ring or sleeve R forcing pin P into the groove G, thus holding the tap up. When the tap is full of nuts the top nut meets face V of ring R, lifting this ring upon the socket and relieving pin P of the weight of R, the weight of the tap and the nuts then causes the tap to be released. By this construction the tap can be inserted or removed while the machine is in motion.

In Fig. 1864 is represented a rotary nut tapper, and in Fig. 1865, is also represented a sectional view of the same machine.

The tap driving spindles are driven from a central vertical shaft S, driven by bevel-gear B. The horizontal driving shaft operates a worm C, to drive a worm-wheel in a vertical shaft, which drives a pinion *a*, driving a spur wheel W in the base of the spindle head by which means this head is revolved so as to bring the successive spindles in front of the operator. A trough is provided at T to cool the tap with oil and water after it has passed through the nut.

Fig. 1866 represents a nut tapping machine designed for light work, the spindles are raised after each nut is tapped by the foot levers and rods shown, the latter connecting to a shoe fitting into a groove in a collar directly beneath the driving pulleys of the spindles.

Fig. 1867 represents a three-spindle nut tapping machine, in which the spindles are horizontal and the nuts are held in three separate heads or horizontal slideways and are traversed by the ball levers shown, and a self-acting pump supplies them with oil. The three spindles are driven by a cone pulley having four changes of speed to suit different diameters of taps.

PIPE THREADING MACHINERY.—In Fig. 1868 is represented a machine for threading and cutting off pipe of large diameter. This machine consists of a driving head corresponding to the headstock of a lathe, but having a hollow spindle through which the pipe may pass. The pipe is driven by a three-jawed chuck, and the threading and cutting off tools are carried on a carriage which has a threading head for ordinary lengths of pipe, and one for short pieces such as nipples,

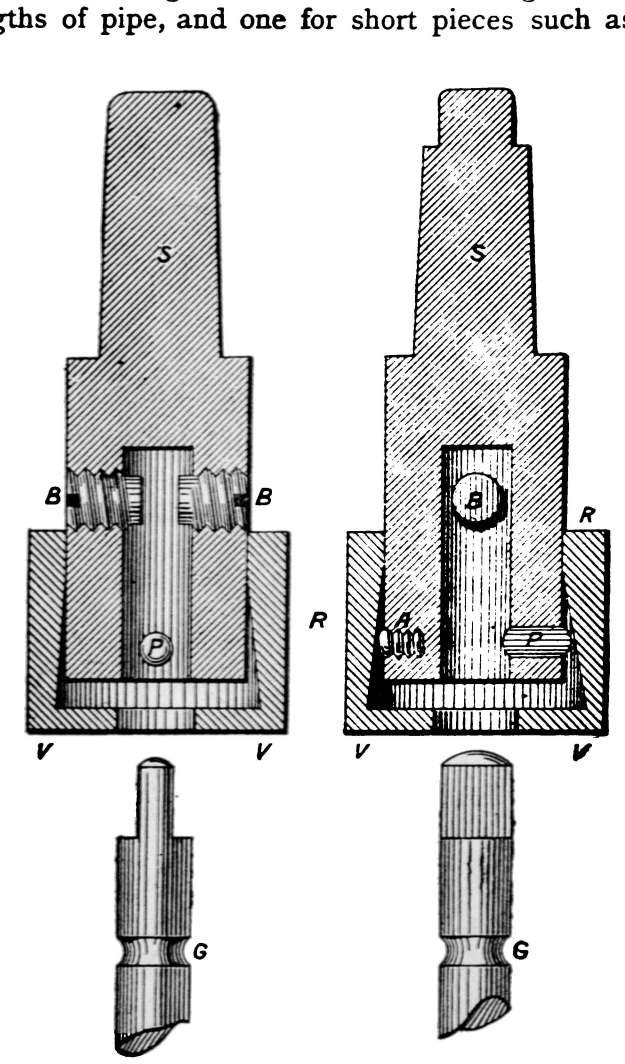

Fig. 1863.

the latter swinging out of the way when not in use. Between these two is a pair of steadying jaws for the pipe. A side view of the front of the carriage is shown in Fig. 1869, H H, &c., representing the threading dies used for nipples. It is movable along a slideway E and pivoted upon its slider. The dies are carried in a chuck G, and are opened or closed by the lever N; at L is the handle for the screw that operates the guide jaws A A.

The threading head at H (right-hand end of Fig. 1868), is

represented in Fig. 1870, being pivoted so that it also can be swung out of the way to permit of the removal of the pipe. The dies C are opened or closed by the hand wheel B, operating a worm meshing into a segment of a worm-wheel upon the body of the head, the amount of motion being regulated by the stop screw at F, which therefore regulates the size to which the dies can be closed, and therefore the diameter of thread the dies will cut. The construction of the cutting-off head is shown in Fig. 1871, T representing the cutting tool which is operated by the hand wheel K. The carriage is fed or traversed by means of two pinions operated by the six-handled wheel shown at W, Fig. 1868; these two pinions engaging racks beneath the carriage, and near the

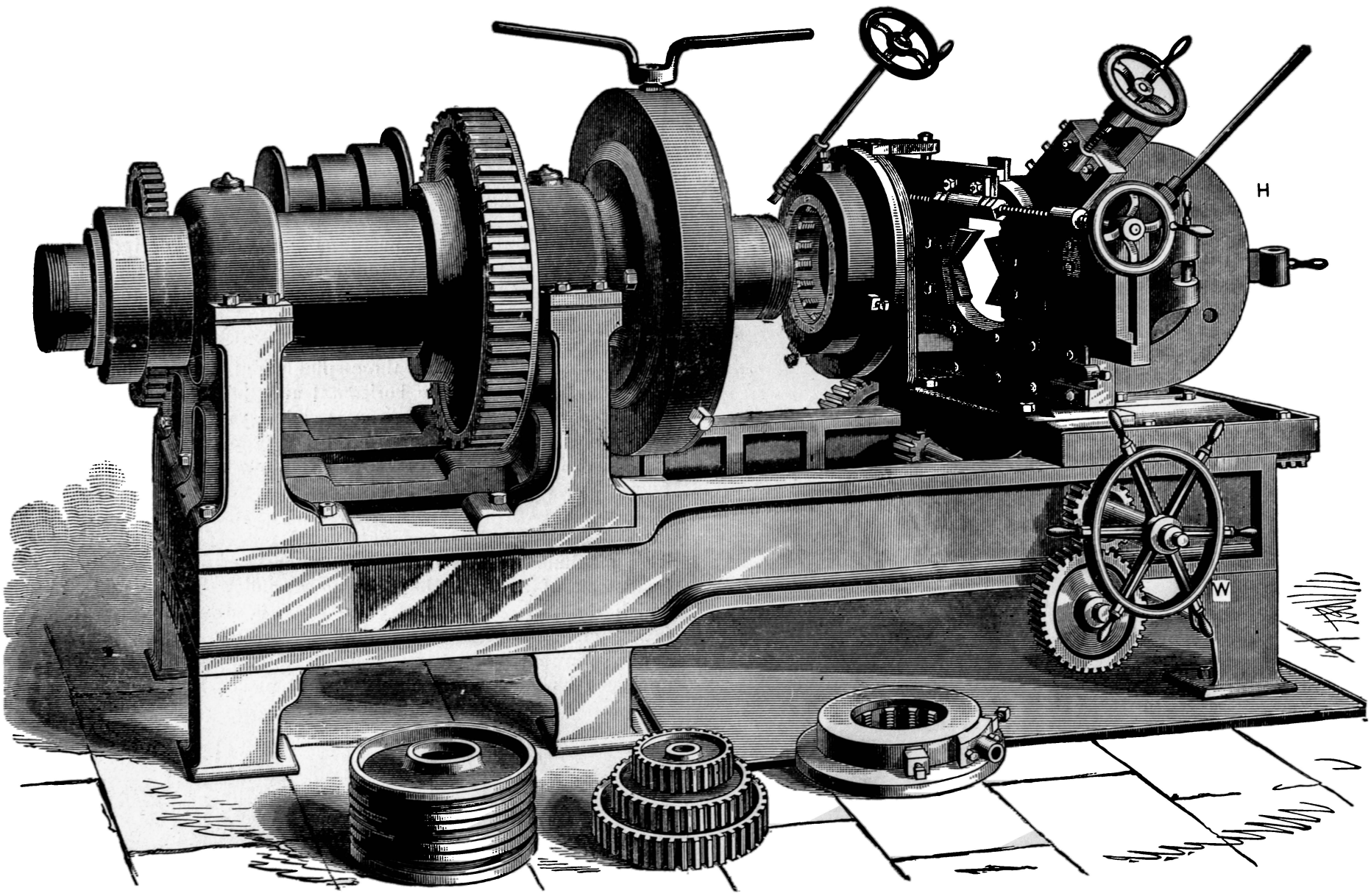

Fig. 1868.

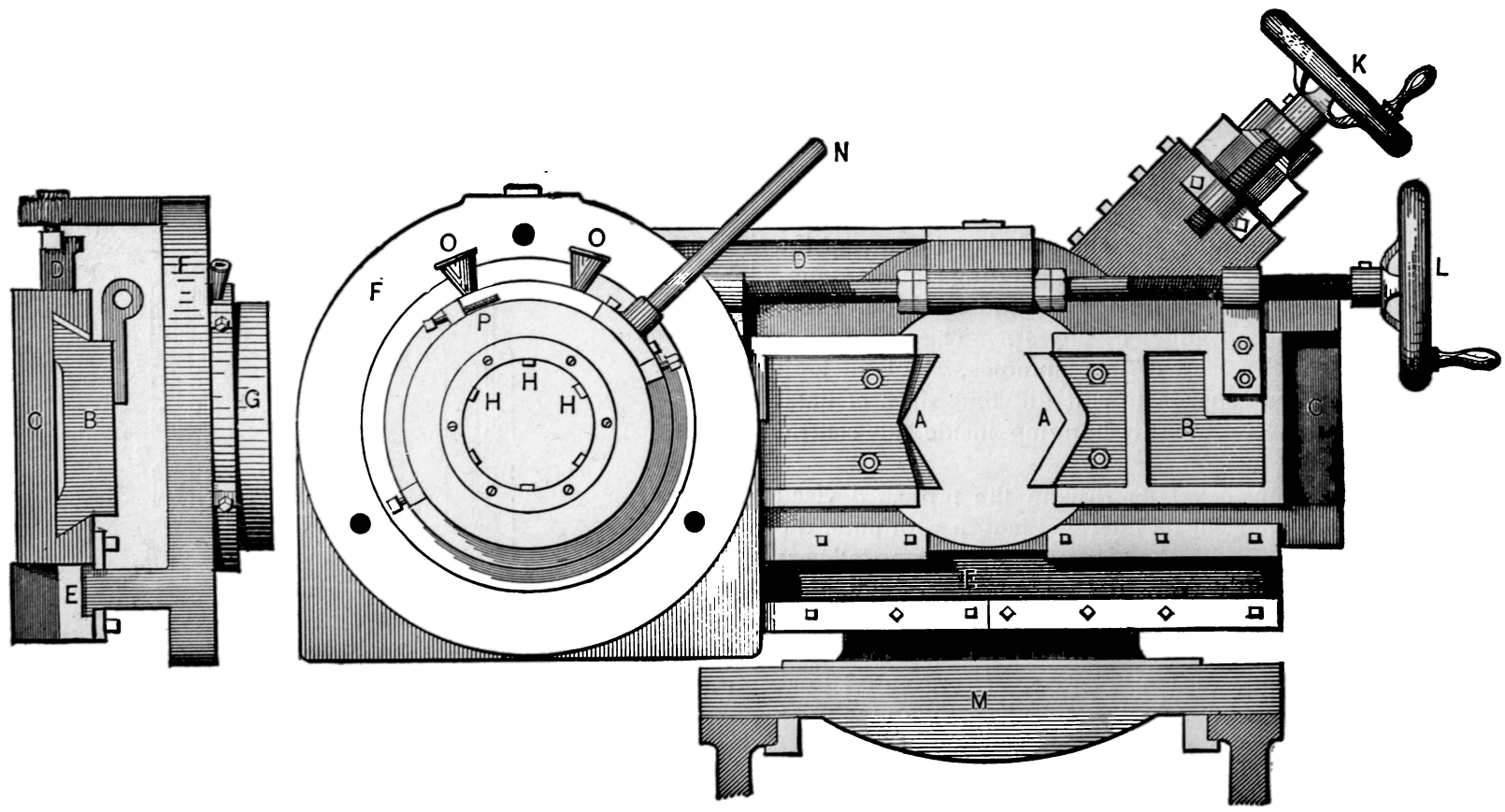

Fig. 1869.

inside edges of the bed, one of them being seen at the extreme right-hand end of Fig. 1868.

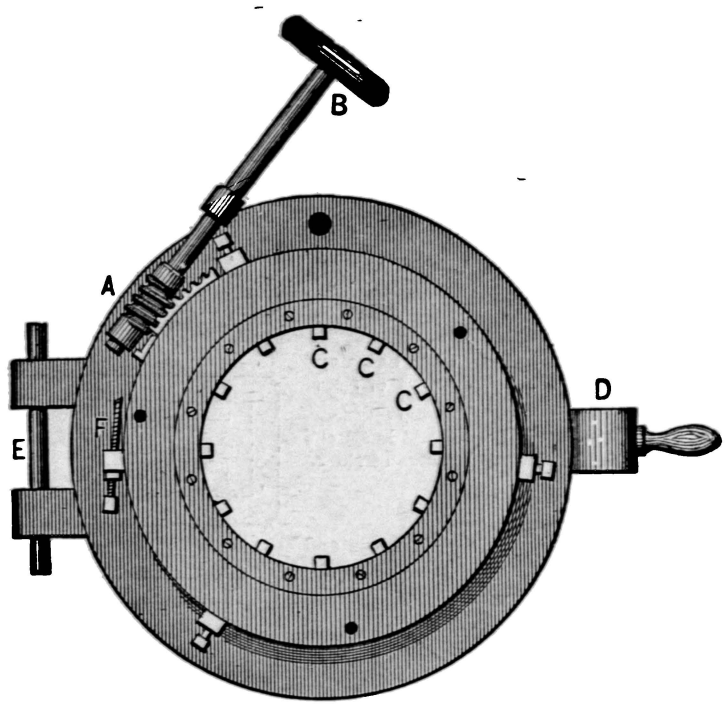

Fig. 1870.

In Fig. 1872 is represented a machine for threading or tapping the fittings for steam and gas pipe. The tap is carried in the end of the vertical spindle, and the work may be held in the vice upon the work table, or if too large the table may be swung out of the way.

The general design of the machine corresponds somewhat to that of a drilling machine.

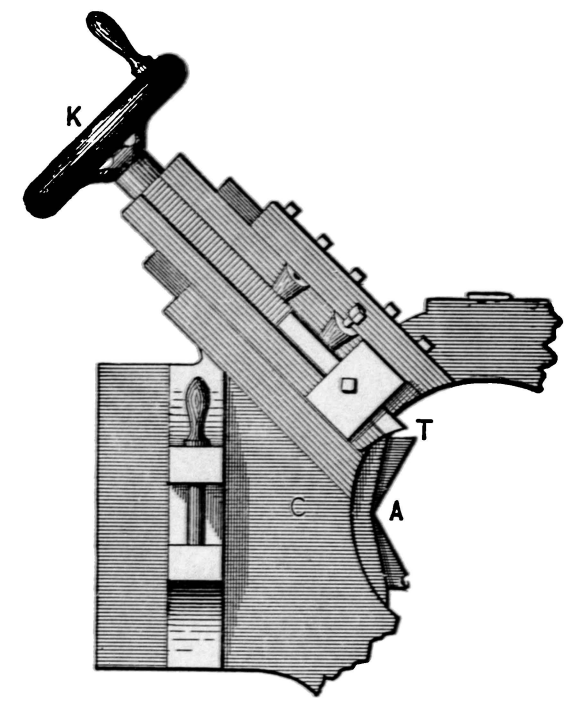

Fig. 1871.

BROACHING PRESS.—Broaching consists in forcing cutters through keyways or apertures, to dress their sides to shape.

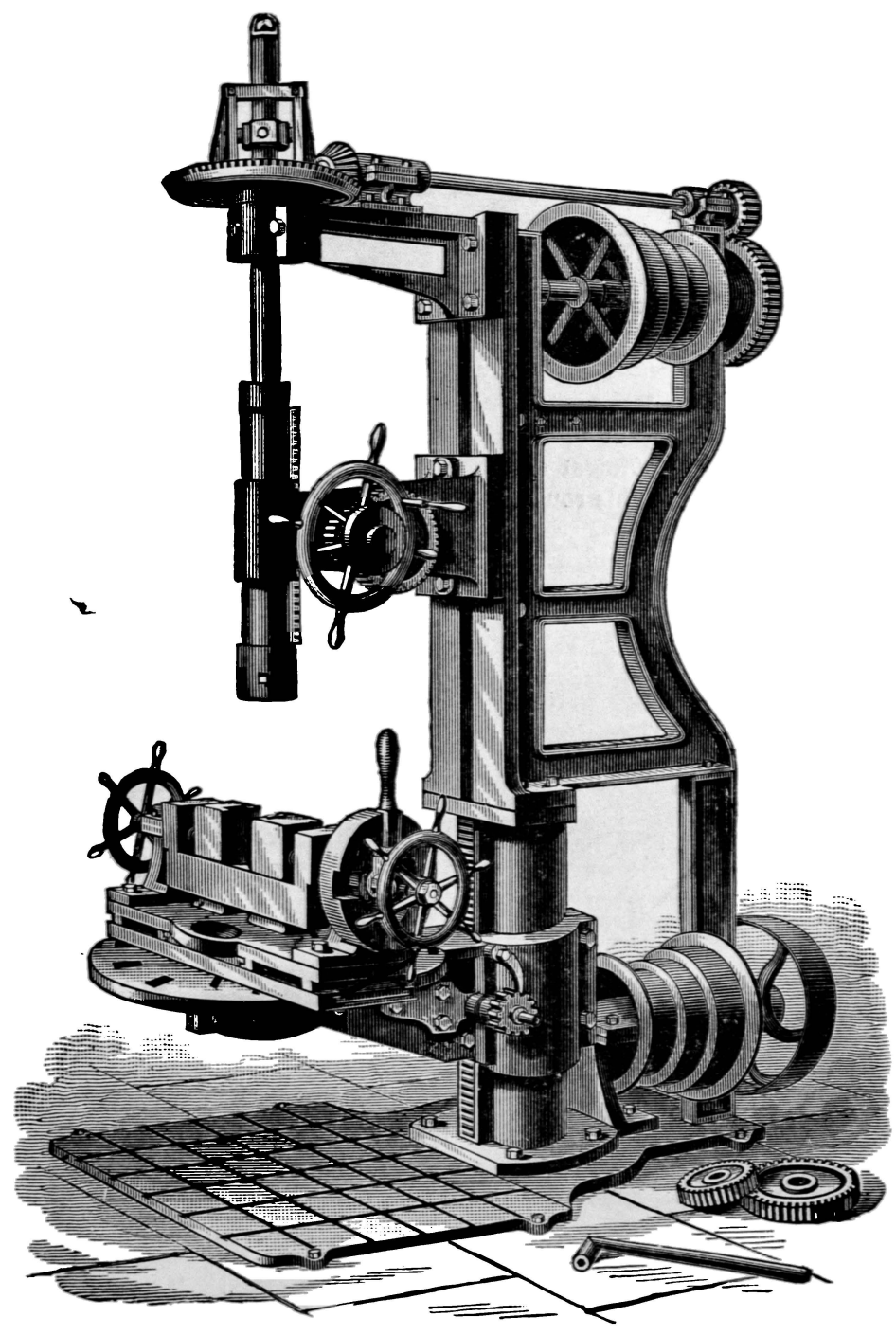

Fig. 1872.

In Fig. 1873 is represented a broaching press. Its driving gear which is within the box frame is so constructed that it may be started and stopped instantly, notwithstanding its heavy fly wheel.

Figs. 1874 to 1877 represent the method of cutting out a keyway by broaching.

In Fig. 1874 A represents the end of a connecting rod having three holes, B, C, and D, pierced through it, their diameters nearly equalling the total finished width of keyway required. The

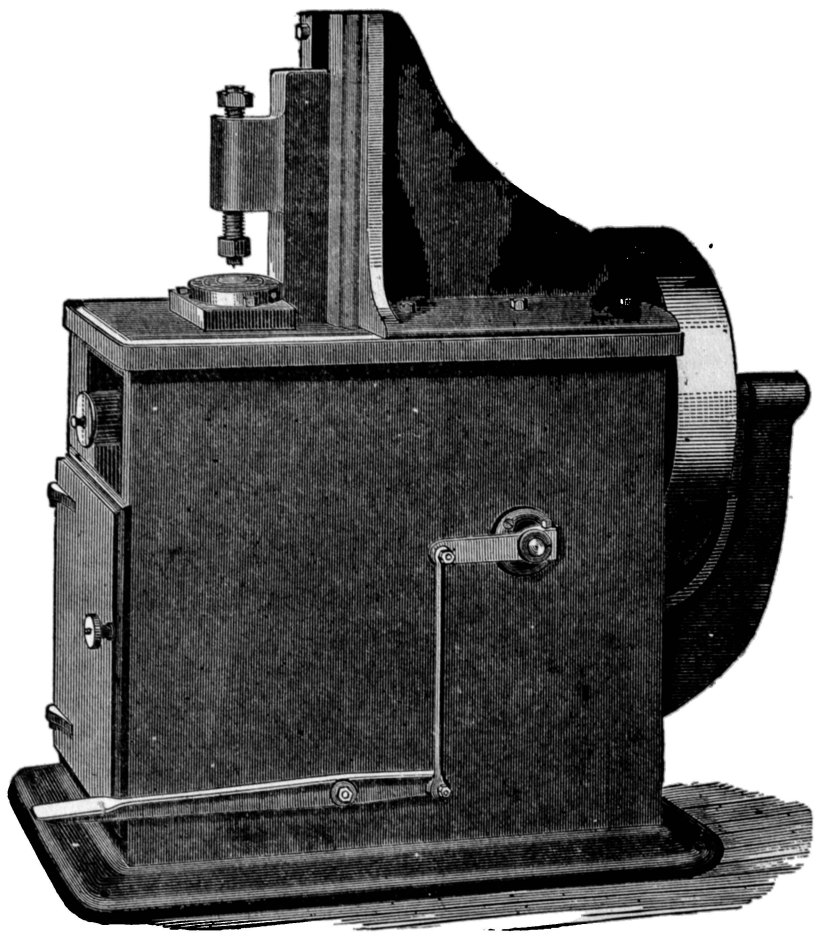

Fig. 1873.

punch D′ is first forced through, thus making the three holes into one.

The V-shape of the end of the cutting punch D′ tends to steady it while in operation, forces the cut outwards into the next hole, preventing them from jambing, and causes the strain upon the punch to begin and end gradually; thus it prevents violent action during the ingress and egress of the cutting punch. This roughing

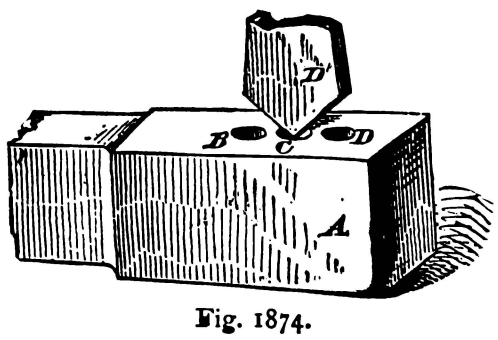

Fig. 1874.

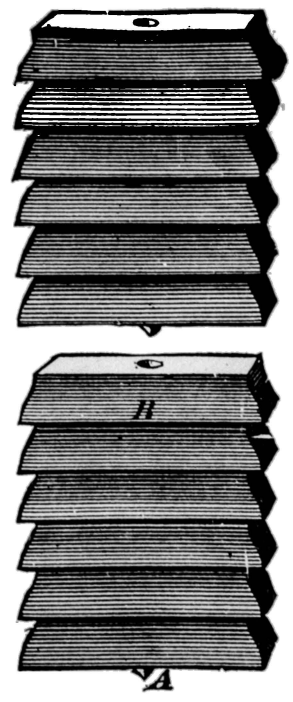

Fig. 1875.

out process dispenses with the use of the hammer and chisel, and saves much time, since it is done at one stroke of the press. The next part of the process is the introduction of a series of broaches such as shown in Fig. 1875, the principles involved being as follow: It is obvious that from the large amount of cutting edge possessed by a single tooth extending all around such a broach, it would be impracticable to take much of a cut at once;

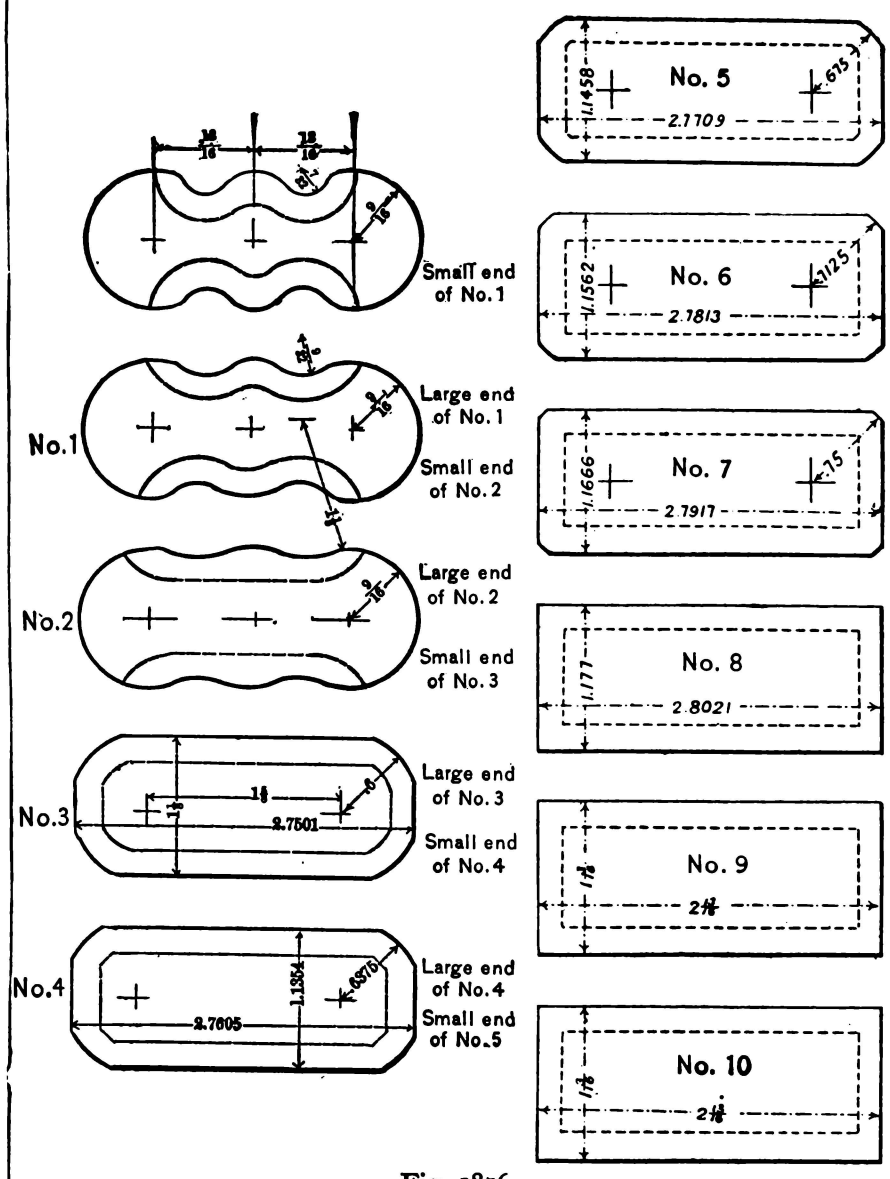

Fig. 1876.

hence a succession of broaches is used, some of them performing

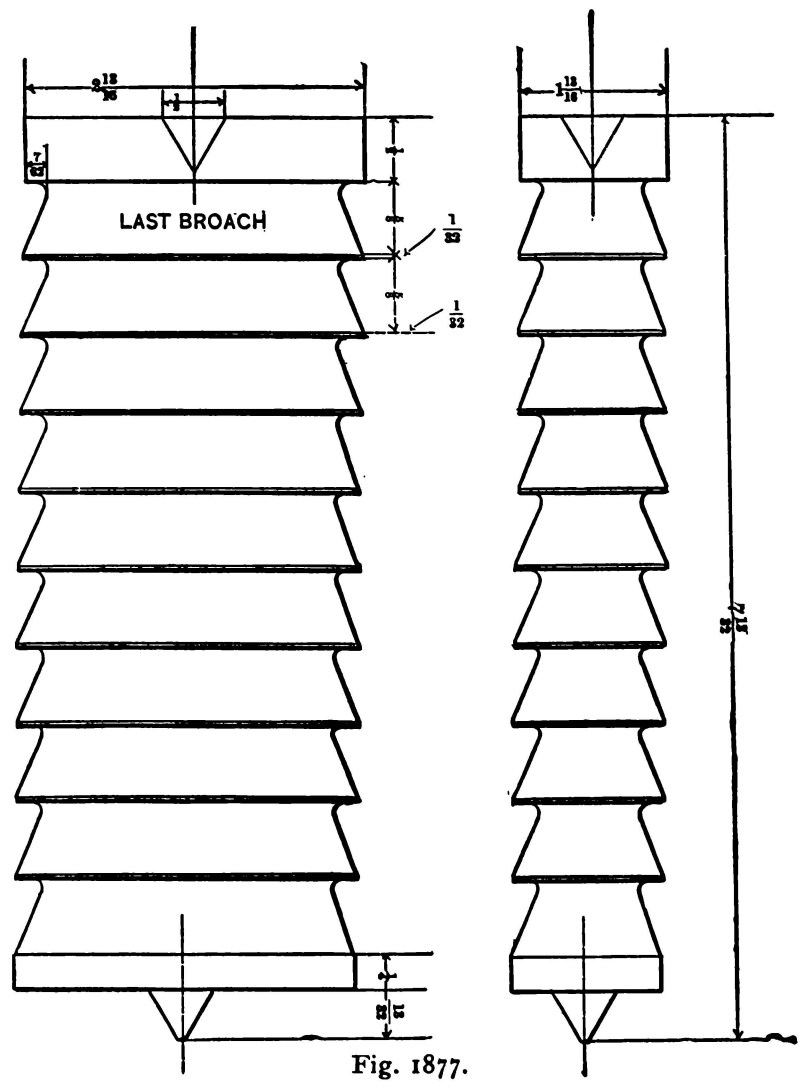

Fig. 1877.

duty on the sides only, others at the ends only, but the last and

final broach is usually made to take a very fine cut all over. All these broaches are made slightly taper ; that is to say, the breadth of the lower tooth at A in Fig. 1875 is made less than that at B, the amount allowed varying according to the dimensions and depth of the keyway.

The smallest of the set of broaches is entered first and forced through until its end stands level with the upper face of the work. Each broach is provided with a conical teat at one end and a corresponding conical recess at the other, so that when the second broach is placed on top of the first, the teat fitting into the recess below it, will hold the two broaches central one to the other.

The head of each broach is made somewhat conical or tapered, and sets in a corresponding recess in the driving head in the machine, which, therefore, holds the broaches parallel one to the other. A succession of these broaches is used, each requiring one stroke of the press to force it within the keyway, and another to force it out.

The following is an example of broaching, relating to which, the dotted lines shown on the broaches, Fig. 1876, indicate the depths and shapes of the teeth. The small end of each broach corresponds to the large end of the one that preceded it, which is necessary in order to permit it to enter easily. Of the ten broaches used the first two operate to straighten the side walls of the hole, No. 3 being the first to operate upon the circular corners, which are not cut to the rectangle until No. 8 has passed through. But as the duty in cutting out the corners diminishes, the walls and ends of the hole are operated upon to finish them to size ; thus broach No. 3 leaves the hole $1\frac{1}{8}$ or 1·125 inches wide, and 2·7501 inches long, which No. 4 increases to 1·1354 inches wide and 2·7605 inches long. This increase of width and depth, or breadth, as it may more properly be termed, continues up to the last or tenth cutter, which is parallel and of the same dimensions as the large end of cutter No. 9. Fig. 1877 gives two views of the No. 10 broach.

Broaches require a very free lubrication in order to prevent them from tearing the walls of the hole, and to enable them to cut easily and smoothly ; hence it is found highly advantageous after the teeth are cut to cut out grooves or passages lengthways of the broach, and extending nearly to the bottom of the teeth, which eases the cut as well as affords the required lubrication ; but it is obvious that the finishing cutter must not have such oil ways.

END OF VOLUME I.